LINDFIELD LEARNING VILLAGE MATERIALS AND FURNITURE SCHEDULE

CODE	DESCRIPTION	PRODUCT	FIXING	INSTALLATION	SUPPLIER	QTY	REF IMAGE
FURNITURE							
PT1	OVERSIZED PLANTER TYPE 1	GRC PLANTER, GEM10, COLOUR OXIDE TO MATCH CORRESPONDING CONCRETE OXIDE PAVING	ON SURFACE TO MATCH CORRESPONDING CONCRETE OXIDE	BY CONTRACTOR	QUATRO DESIGN	9	
PT2	OVERSIZED PLANTER TYPE 2	GRC PLANTER, GEM15, COLOUR OXIDE TO MATCH CORRESPONDING CONCRETE OXIDE PAVING	ON SURFACE	BY CONTRACTOR	QUATRO DESIGN	11	
PT3	TROUGH PLANTER TYPE 1	GRC PLANTER, ZMM164040 , COLOUR OXIDE GYPSEY TO MATCH COLOUR OF PAV1	ON SURFACE	BY CONTRACTOR	QUATRO DESIGN	6	
N/A	NET BALL RING WITH NET	WALL MOUNTED NETBALL RING	POSITION AS INDICATED ON PLAN AND INSTALL TO MANUFACTURERS INSTRUCTIONS	BY CONTRACTOR	NET WORLD SPORTS	2	
N/A	BASKETBALL RING WITH NET	PRO RIM RING R11B	POSITION AS INDICATED ON PLAN AND INSTALL TO MANUFACTURERS INSTRUCTIONS	BY CONTRACTOR	PLAYHARD SPORTS EQUIPMENT	1	
BUB	BUBBLER	VANDAL PROOF SELF CLOSING BUBBLER	AS PER MANUFACTURERS INSTRUCTIONS AND IN ACCORDANCE TO EFSG'S STANDARD SG603/3	BY CONTRACTOR	MARKO STAINLESS & ALUMINIUM	18	
N/A	TROUGH FOR BUBBLER	STAINLESS STEEL TROUGH	IN ACCORDANCE TO EFSG'S STANDARD SG603/4	BY CONTRACTOR	BY CONTRACTOR	6	
N/A	BIKE PARKING	RECLAIMED BIKE PARKING	AS PER MANUFACTURERS INSTRUCTIONS & IN ACCORDANCE WITH AS1428.4	BY CONTRACTOR	RECLAIMED FROM SITE	4	
N/A	PICNIC TABLE AND BENCH SET	TSD PICNIC SETTING	AS PER MANUFACTURERS INSTRUCTIONS	BY CONTRACTOR	STODDART	3	
PLAY EQUIPMENT							
SL1	SLIDE TYPE 1	SLIDE BENDWAY (1,10) 0-41446-001	TO MANUFACTURERS INSTRUCTIONS	BY CONTRACTOR	KAISER & KUHNE	1	
SL2	SLIDE TYPE 2	SLIDE BENDWAY (1,40) 0-41446-001	TO MANUFACTURERS INSTRUCTIONS	BY CONTRACTOR	KAISER & KUHNE	1	
EQ1	PLAY EQUIPMENT TYPE 1	FIREBALL.2.1 90.260.3071	TO MANUFACTURERS INSTRUCTIONS	BY CONTRACTOR	BERLINER SEILFABRIK	1	
EQ2	PLAY EQUIPMENT TYPE 2	O'TANNEBAUM 95.200.080	TO MANUFACTURERS INSTRUCTIONS	BY CONTRACTOR	BERLINER SEILFABRIK	2	
EQ3	PLAY EQUIPMENT TYPE 3	ROTOR 0-45450-001	TO MANUFACTURERS INSTRUCTIONS	BY CONTRACTOR	KAISER & KUHNE	2	
EQ4	PLAY EQUIPMENT TYPE 4	HAMMOCK 95.170.196	TO MANUFACTURERS INSTRUCTIONS	BY CONTRACTOR	BERLINER SEILFABRIK	3	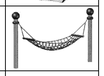
EQ5	PLAY EQUIPMENT TYPE 5	WAVE	TO MANUFACTURERS INSTRUCTIONS	BY CONTRACTOR	LINIE M	1	
EQ6	PLAY EQUIPMENT TYPE 6	CHIPS	TO MANUFACTURERS INSTRUCTIONS	BY CONTRACTOR	LINIE M	2	
EQ7	BALANCING BEAMS	BALANCE CIRCUIT F-8680-08	TO MANUFACTURERS INSTRUCTIONS	BY CONTRACTOR	MODUPLAY	1 SET	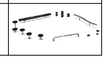

LINDFIELD LEARNING VILLAGE MATERIAL AND FINISHES SCHEDULE

CODE	DESCRIPTION	PRODUCT	SUPPPLIER	SUBSTRATE	DETAIL REF	REFERENCE IMAGE
PAV1	CONCRETE TYPE 1	CONCRETE OXIDE, BROOM FINISH, GYPSEY	CCS	ON SUBSTRATE REFER TO ARCHITECT'S DETAILS		
PAV2	CONCRETE TYPE 2	CONCRETE OXIDE, BROOM FINISH, RUBY	CCS	ON SUBSTRATE REFER TO ARCHITECT'S DETAILS		
PAV3	CONCRETE TYPE 3	CONCRETE OXIDE, BROOM FINISH, MOSS GREEN	CCS	ON SUBSTRATE REFER TO ARCHITECT'S DETAILS		
PAV4	CONCRETE TYPE 4	CONCRETE OXIDE, BROOM FINISH, KINGFISHER	CCS	ON SUBSTRATE REFER TO ARCHITECT'S DETAILS		
PAV5	CONCRETE TYPE 5	CONCRETE OXIDE, BROOM FINISH, CANARY	CCS	ON SUBSTRATE REFER TO ARCHITECT'S DETAILS		
PAV6	RUBBER SOFTFALL TYPE 1	35MM DEPTH TPV, INPLAY 1-4mm, WET POUR LAYER SOFTFALL COLOUR MIX: 50% RH50, 40% RH40, 10% RH41	SURFACE DESIGNS	ON SUBSTRATE REFER TO ARCHITECT'S DETAILS		
PAV7	RUBBER SOFTFALL TYPE 2	35MM DEPTH TPV, INPLAY 1-4mm, WET POUR LAYER SOFTFALL, COLOUR MIX: 50% RH01, 50% RH02	SURFACE DESIGNS	ON SUBSTRATE REFER TO ARCHITECT'S DETAILS		
PAV8	RUBBER SOFTFALL TYPE 3	35MM DEPTH TPV, INPLAY 1-4mm, WET POUR LAYER SOFTFALL, COLOUR MIX: 50% RH10, 10% RH11, 40% RH12	SURFACE DESIGNS	ON SUBSTRATE REFER TO ARCHITECT'S DETAILS		
PAV9	RUBBER SOFTFALL TYPE 4	35MM DEPTH TPV, INPLAY 1-4mm, WET POUR LAYER SOFTFALL, COLOUR MIX: 70% RH20, 10% RH21, 20% RH22	SURFACE DESIGNS	ON SUBSTRATE REFER TO ARCHITECT'S DETAILS		
PAV10	RUBBER SOFTFALL TYPE 5	35MM DEPTH TPV, INPLAY 1-4mm, WET POUR LAYER SOFTFALL, COLOUR MIX: 50% RH22, 50% RH26	SURFACE DESIGNS	ON SUBSTRATE REFER TO ARCHITECT'S DETAILS		
PAV11	RUBBER SOFTFALL TYPE 6	35MM DEPTH TPV, INPLAY 1-4mm, WET POUR LAYER SOFTFALL, COLOUR MIX: 70% RH40, 30% RH41	SURFACE DESIGNS	ON SUBSTRATE REFER TO ARCHITECT'S DETAILS		
PAV12	RUBBER SOFTFALL TYPE 7	35MM DEPTH TPV, INPLAY 1-4mm, WET POUR LAYER SOFTFALL, LIGHT RED COLOUR MIX: 10% RH31, 70% RH90, 20% RH02	SURFACE DESIGNS	ON SUBSTRATE REFER TO ARCHITECT'S DETAILS		
PAV13	RUBBER SOFTFALL TYPE 8	35MM DEPTH TPV, INPLAY 1-4mm, WET POUR LAYER SOFTFALL, COLOUR MIX: 33% RH10, 33% RH31, 33% RH11	SURFACE DESIGNS	ON SUBSTRATE REFER TO ARCHITECT'S DETAILS		
PAV14	RUBBER SOFTFALL TYPE 9	35MM DEPTH TPV, INPLAY 1-4mm, WET POUR LAYER SOFTFALL, COLOUR MIX: 30% RH31, 40% RH23, 30% RH26	SURFACE DESIGNS	ON SUBSTRATE REFER TO ARCHITECT'S DETAILS		
PAV15	RUBBER SOFTFALL TYPE 10	35MM DEPTH TPV, INPLAY 1-4mm, WET POUR LAYER SOFTFALL, COLOUR MIX: 80% RH41, 20% RH31	SURFACE DESIGNS	ON SUBSTRATE REFER TO ARCHITECT'S DETAILS		
PAV16	RUBBER SOFTFALL TYPE 11	35MM DEPTH TPV, INPLAY 1-4mm, WET POUR LAYER SOFTFALL, COLOUR MIX: 25% RH41, 60% RH31, 15% RH50	SURFACE DESIGNS	ON SUBSTRATE REFER TO ARCHITECT'S DETAILS		
SE	TERRAZZO SEATING	PRE-CAST & INSITU TERRAZZO CONCRETE SEATS TILE CODE: MT123	TERRAZZO AUSTRALIAN MARBLE	REFER TO PLAN		
PAV17	GRAVEL PAVING	NEPEAN RIVER PEBBLE 20MM	AUSTRALIAN NATIVE LANDSCAPE	ON SLAB		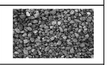
N/A	SAND	WASHED NEWCASTLE PLAY SAND	BY CONTRACTOR	IN SANDPIT		
N/A	SOIL MIX A	NATIVE LOW 'D' MIX	AUSTRALIAN NATIVE LANDSCAPE	IN RAISED PLANTER		
N/A	DRAINAGE SAND	WASHED COARSE RIVER SAND	BY CONTRACTOR	IN RAISED PLANTER		
N/A	DRAINAGE CELL	30MM DRAINAGE CELL 80030P	ATLANTIS	IN RAISED PLANTER		
N/A	MULCH	EUCY MULCH	AUSTRALIAN NATIVE LANDSCAPE	IN PLANTED AREAS		

NOT FOR CONSTRUCTION

© **Copyright DesignInc Sydney Pty Limited**

This drawing is protected by copyright. All rights are reserved. Unless permitted under the Copyright Act 1968, no part of this drawing may in any form or by any means be reproduced, published, broadcast or transmitted without the prior written permission of the copyright owner.

Please note

If the Status of this drawing is not signed off For Construction it may be subject to change, alteration or amendment at the discretion of DesignInc Sydney Pty Limited. If so, DesignInc Sydney Pty Limited is not liable for any loss, damage, harm or injury whether special, consequential, direct or indirect, suffered by you or any other person as a result of your use of this drawing for construction purposes.

Figured dimensions take preference to scale readings. Verify all dimensions on site. Report any discrepancies to the Architect for decision before proceeding with the work.

Nominated Architects

Anthony Quan 5421 I Sandeep Amin 7337 I Ian Armstrong 7260 I Richard Does 8126

No	DATE	REVISIONS	BY
A	08/08/2017	ISSUED FOR PRE TENDER	IC
B	01/09/2017	ISSUED FOR PRE TENDER	IC

0 0.5 1 1.5 2 2.5 m
SCALE BAR - 1:50

0 0.1 0.2 0.3 0.4 0.5 m
SCALE BAR - 1:10

ARCHITECT

DesignInc| Lacoste + Stevenson| bmc2
architects in association

DesignInc Sydney PTY LIMITED ACN 003008820
L12 / 77 PACIFIC HWY NORTH SYDNEY NSW 2060 AUSTRALIA
PO BOX 651 NORTH SYDNEY NSW 2059 AUSTRALIA
T +612 8905 7100 F +612 8905 7199
www.designinc.com.au E sydney@sydney.designinc.com.au
Architecture Urban Design Interiors

CLIENT

PROJECT
LINDFIELD LEARNING VILLAGE
Eton Road,
Lindfield NSW 2070

TITLE
MATERIALS & FURNITURE SCHEDULE

N

DRAWN BY	BS
SCALES	1 : 200 @ A1
PLOT DATE	01/09/2017
PROJECT Nº.	S151441
REVISION	B
DRAWING Nº.	LA-5130

DRAWING STATUS	REVIEWED BY	SIGNATURE	DATE
TENDER	MR		

QUALITY CERTIFIED ISO 9001

Completion of the Drawing Status is evidence the design has been verified as conforming to the requirements of the Project M.S. Plan. Initialling the "Drawn By" box confirms that this drawing has been prepared in conformity with DesignInc Sydney M.S. procedures.

TENDER

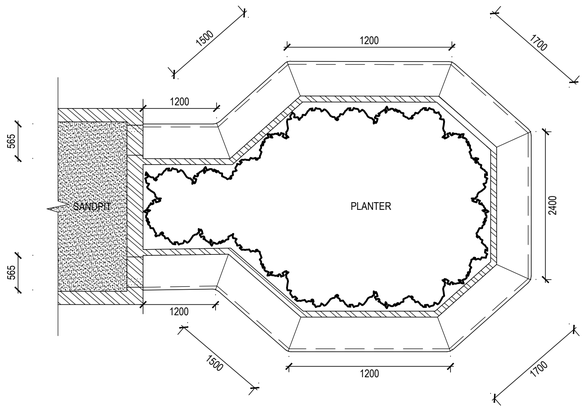

01 PRECAST TERRAZZO SEATING BENCH TYPE 1 - PLAN
SCALE 1 : 50

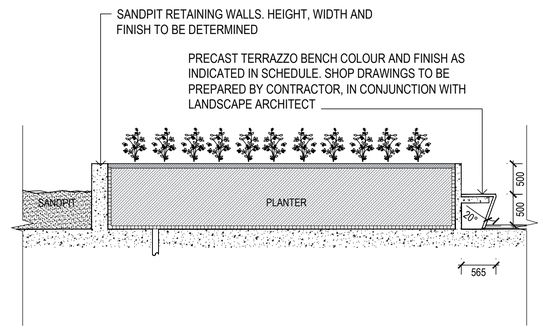

02 PRECAST TERRAZZO SEATING BENCH TYPE 1 - SECTION
SCALE 1 : 50

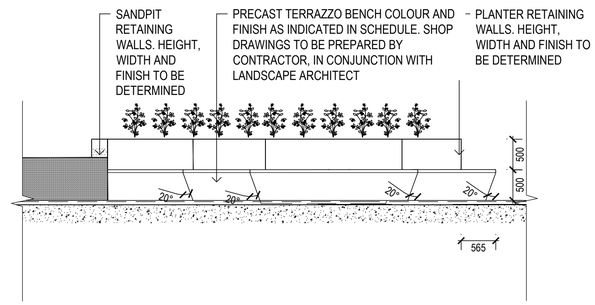

03 PRECAST TERRAZZO SEATING BENCH TYPE 1 - ELEVATION
SCALE 1 : 50

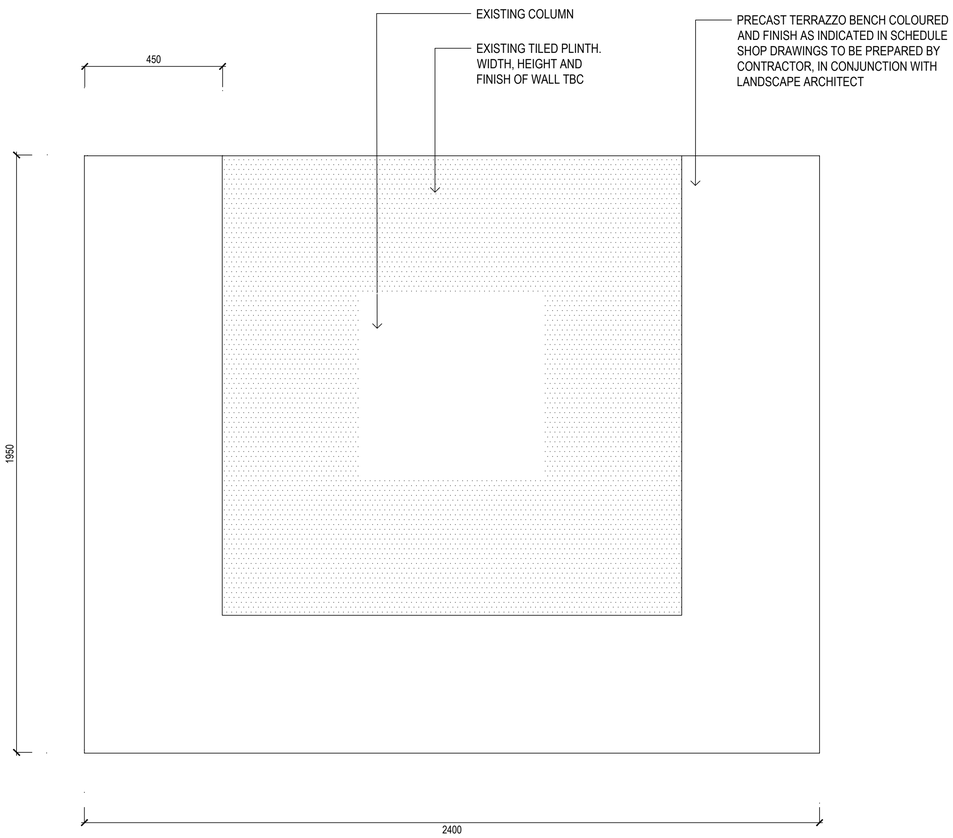

04 PRECAST TERRAZZO SEATING BENCH TYPE 2 - PLAN
SCALE 1 : 10

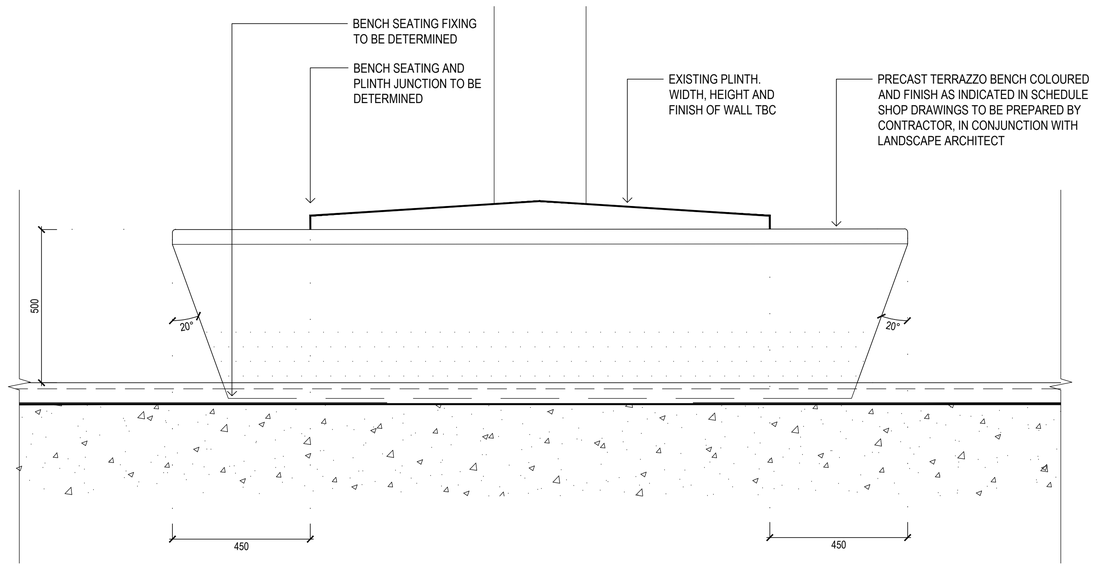

05 PRECAST TERRAZZO SEATING BENCH TYPE 2 - SECTIONAL ELEVATION
SCALE 1 : 10

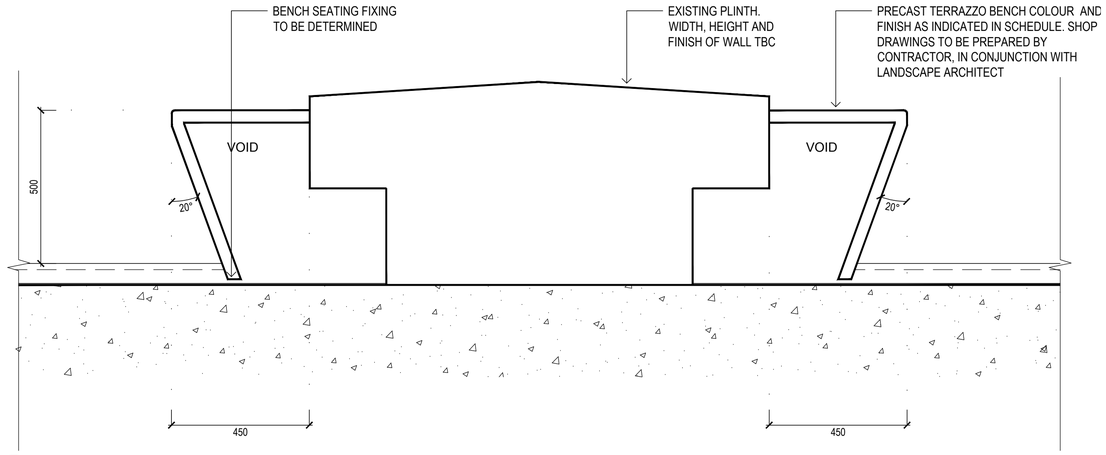

06 PRECAST TERRAZZO SEATING BENCH TYPE 2 - SECTIONAL
SCALE 1 : 10

NOT FOR CONSTRUCTION

© Copyright DesignInc Sydney Pty Limited

This drawing is protected by copyright. All rights are reserved. Unless permitted under the Copyright Act 1968, no part of this drawing may in any form or by any means be reproduced, published, broadcast or transmitted without the prior written permission of the copyright owner.

Please note

If the Status of this drawing is not signed off For Construction it may be subject to change, alteration or amendment at the discretion of DesignInc Sydney Pty Limited. If so, DesignInc Sydney Pty Limited is not liable for any loss, damage, harm or injury whether special, consequential, direct or indirect, suffered by you or any other person as a result of your use of this drawing for construction purposes.

Figured dimensions take preference to scale readings. Verify all dimensions on site. Report any discrepancies to the Architect for decision before proceeding with the work.

Nominated Architects

Anthony Quan 5421 I Sandeep Amin 7337 I Ian Armstrong 7260 I Richard Does 8126

No	DATE	REVISIONS	BY
A	08/08/2017	ISSUED FOR TENDER	IC
B	01/09/2017	ISSUED FOR TENDER	IC

SCALE BAR - 1:50

SCALE BAR - 1:10

ARCHITECT

DesignInc| Lacoste + Stevenson| bmc2
architects in association

DesignInc Sydney PTY LIMITED ACN 003008820
L12 / 77 PACIFIC HWY NORTH SYDNEY NSW 2060 AUSTRALIA
PO BOX 651 NORTH SYDNEY NSW 2059 AUSTRALIA
T +612 8905 7100 F +612 8905 7199
www.designinc.com.au E sydney@sydney.designinc.com.au
Architecture Urban Design Interiors

CLIENT

PROJECT: LINDFIELD LEARNING VILLAGE
Eton Road,
Lindfield NSW 2070

TITLE: PRECAST TERRAZZO SEATING TYPE 1 & 2 DETAILS

DRAWN BY	IC
SCALES	AS SHOWN @ A1
PLOT DATE	01/09/2017
PROJECT Nº.	S151441
DRAWING Nº.	LA-5210
REVISION	B

DRAWING STATUS	REVIEWED BY	SIGNATURE	DATE
TENDER	MR		

QUALITY CERTIFIED ISO 9001: Completion of the Drawing Status is evidence the design has been verified as conforming to the requirements of the Project M.S. Plan. Initialling the "Drawn By" box confirms that this drawing has been prepared in conformity with DesignInc Sydney M.S. procedures.

TENDER

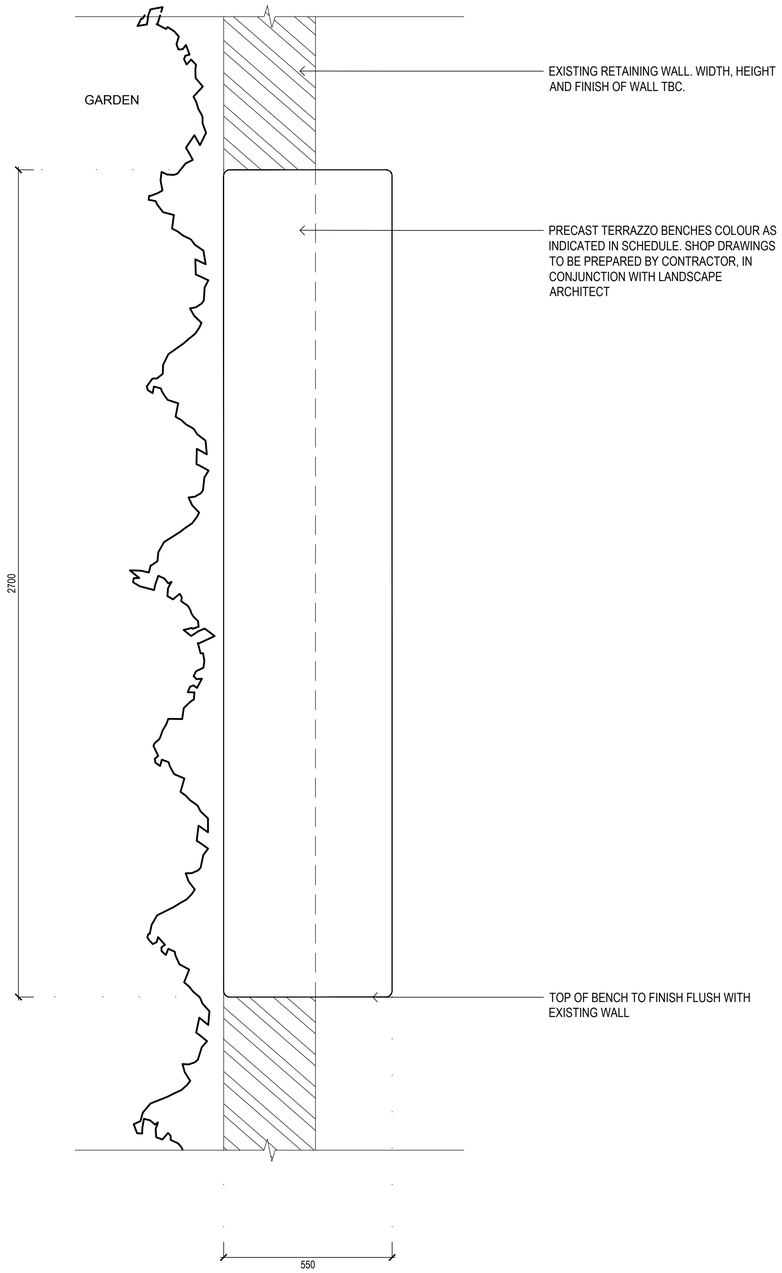

01 PRECAST TERRAZZO SEATING BENCH TYPE 3 - PLAN
SCALE 1 : 10

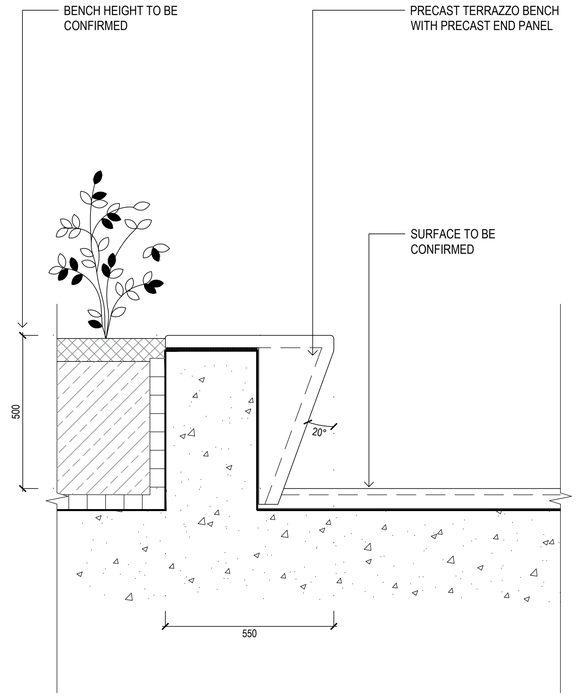

02 PRECAST TERRAZZO SEATING BENCH TYPE 3 - SECTIONAL ELEVATION
SCALE 1 : 10

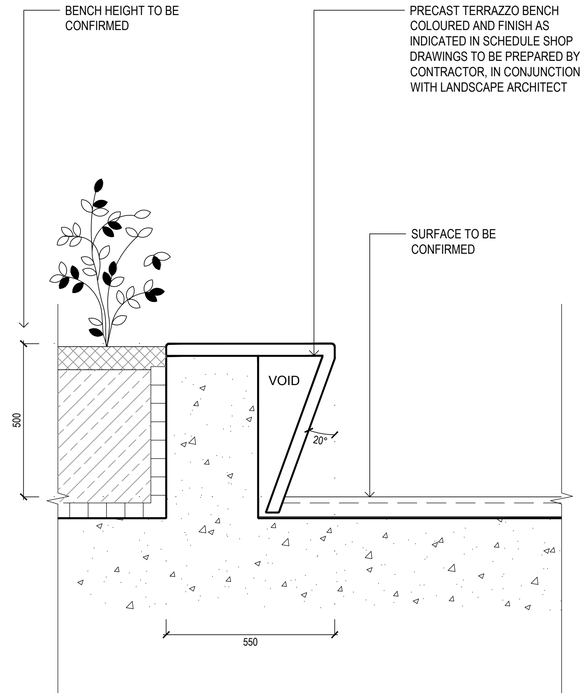

03 PRECAST TERRAZZO SEATING BENCH TYPE 3 - SECTION
SCALE 1 : 10

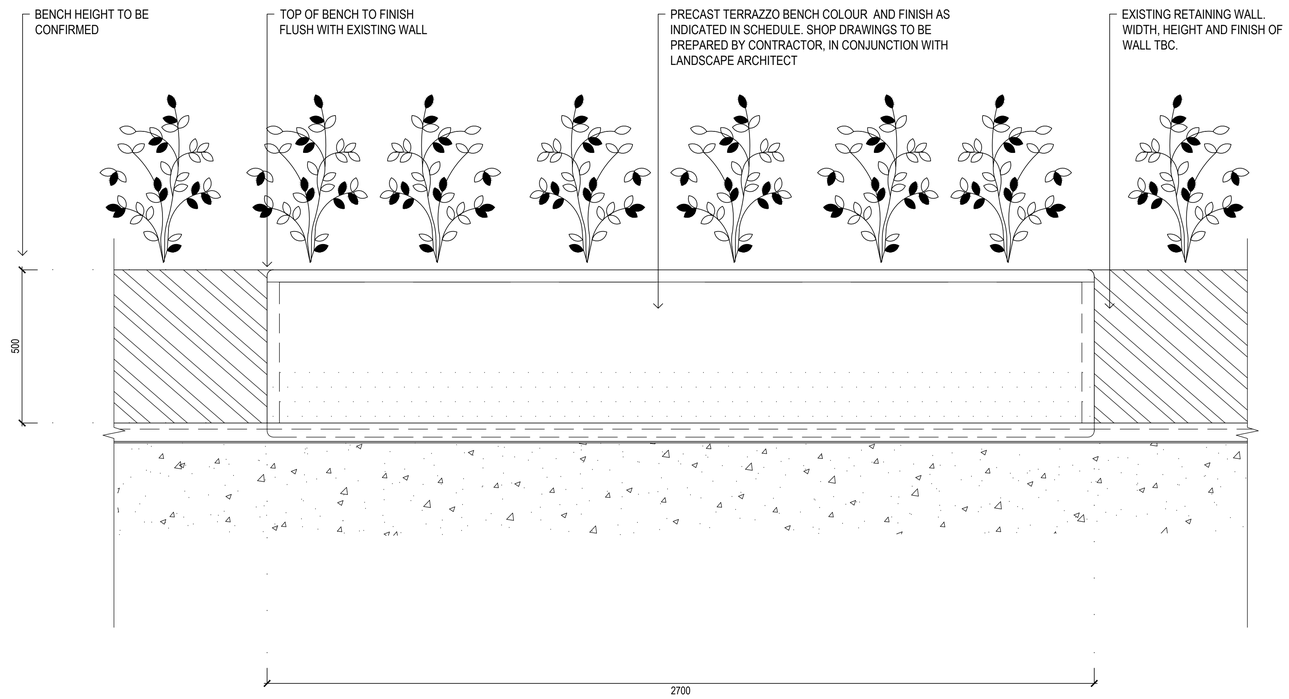

04 PRECAST TERRAZZO SEATING BENCH TYPE 3 - ELEVATION
SCALE 1 : 10

NOT FOR CONSTRUCTION

© **Copyright DesignInc Sydney Pty Limited**

This drawing is protected by copyright. All rights are reserved. Unless permitted under the Copyright Act 1968, no part of this drawing may in any form or by any means be reproduced, published, broadcast or transmitted without the prior written permission of the copyright owner.

Please note

If the Status of this drawing is not signed off For Construction it may be subject to change, alteration or amendment at the discretion of DesignInc Sydney Pty Limited. If so, DesignInc Sydney Pty Limited is not liable for any loss, damage, harm or injury whether special, consequential, direct or indirect, suffered by you or any other person as a result of your use of this drawing for construction purposes.

Figured dimensions take preference to scale readings. Verify all dimensions on site. Report any discrepancies to the Architect for decision before proceeding with the work.

Nominated Architects

Anthony Quan 5421 I Sandeep Amin 7337 I Ian Armstrong 7260 I Richard Does 8126

No	DATE	REVISIONS	BY
A	01/09/2017	ISSUED FOR TENDER	IC

SCALE BAR - 1:50 (0, 0.5, 1, 1.5, 2, 2.5 m)

SCALE BAR - 1:10 (0, 0.1, 0.2, 0.3, 0.4, 0.5 m)

ARCHITECT

DesignInc| Lacoste + Stevenson| bmc2
architects in association

DesignInc Sydney PTY LIMITED ACN 003008820
L12 / 77 PACIFIC HWY NORTH SYDNEY NSW 2060 AUSTRALIA
PO BOX 651 NORTH SYDNEY NSW 2059 AUSTRALIA
T +612 8905 7100 F +612 8905 7199
www.designinc.com.au E sydney@sydney.designinc.com.au
Architecture Urban Design Interiors

CLIENT

PROJECT: LINDFIELD LEARNING VILLAGE
Eton Road,
Lindfield NSW 2070

TITLE: PRECAST TERRAZZO SEATING TYPE 3 DETAILS

DRAWN BY	IC
SCALES	AS SHOWN @ A1
PLOT DATE	01/09/2017
PROJECT Nº.	S151441
DRAWING Nº.	LA-5211
REVISION	A

DRAWING STATUS	REVIEWED BY	SIGNATURE	DATE
TENDER	MR		

QUALITY CERTIFIED ISO 9001 Completion of the Drawing Status is evidence the design has been verified as conforming to the requirements of the Project M.S. Plan. Initialling the "Drawn By" box confirms that this drawing has been prepared in conformity with DesignInc Sydney M.S. procedures.

TENDER

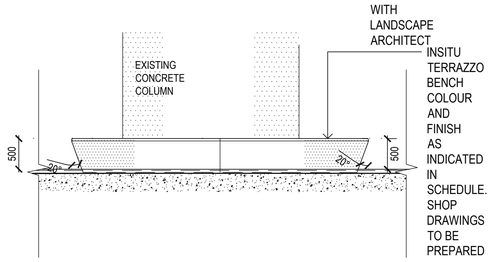

01 INSITU TERRAZZO SEATING BENCH - TYPICAL ELEVATION
SCALE 1 : 50

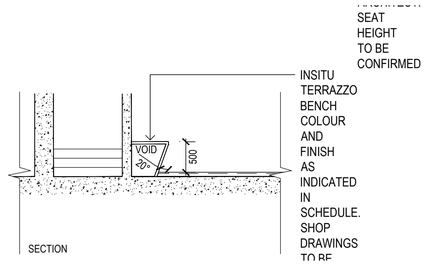

02 INSITU TERRAZZO SEATING BENCH TYPICAL SECTION
SCALE 1 : 50

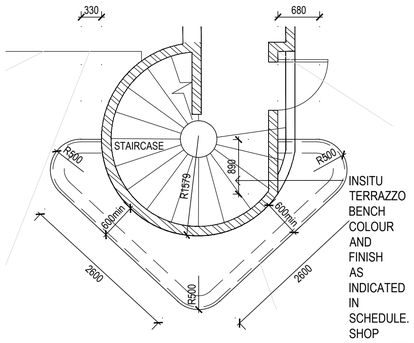

03 INSITU TERRAZZO SEATING BENCH TYPE 1 - PLAN
SCALE 1 : 50

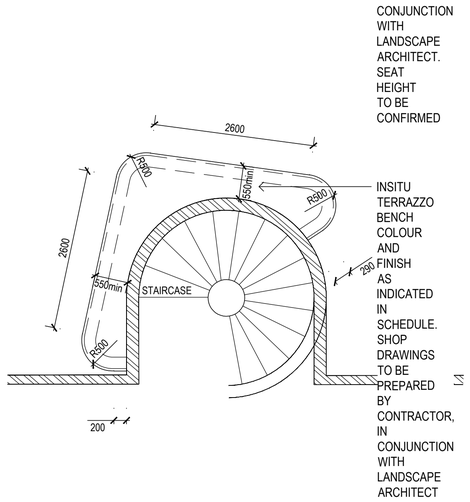

05 INSITU TERRAZZO SEATING BENCH TYPE 2 - PLAN
SCALE 1 : 50

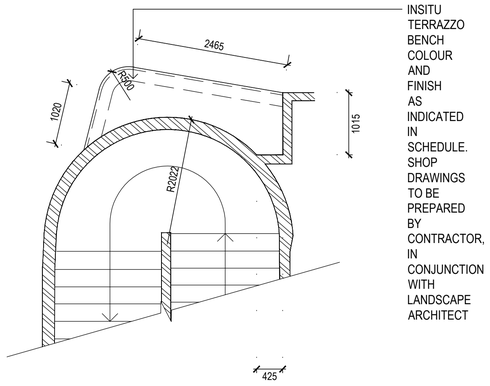

04 INSITU TERRAZZO SEATING BENCH TYPE 1 - ELEVATION
SCALE 1 : 50

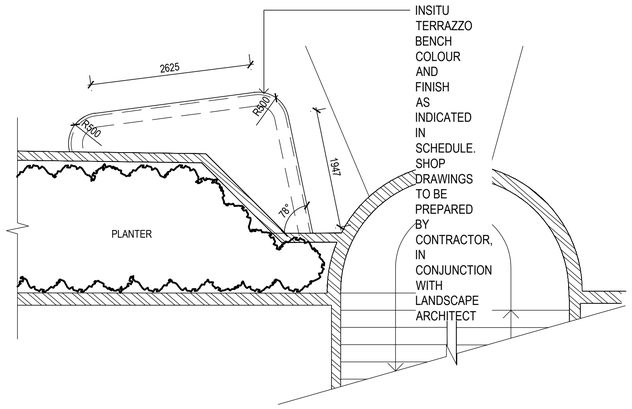

06 INSITU TERRAZZO SEATING BENCH TYPE 1 - SECTION
SCALE 1 : 50

NOT FOR CONSTRUCTION

© **Copyright DesignInc Sydney Pty Limited**

This drawing is protected by copyright. All rights are reserved. Unless permitted under the Copyright Act 1968, no part of this drawing may in any form or by any means be reproduced, published, broadcast or transmitted without the prior written permission of the copyright owner.

Please note

If the Status of this drawing is not signed off For Construction it may be subject to change, alteration or amendment at the discretion of DesignInc Sydney Pty Limited. If so, DesignInc Sydney Pty Limited is not liable for any loss, damage, harm or injury whether special, consequential, direct or indirect, suffered by you or any other person as a result of your use of this drawing for construction purposes.

Figured dimensions take preference to scale readings. Verify all dimensions on site. Report any discrepancies to the Architect for decision before proceeding with the work.

Nominated Architects

Anthony Quan 5421 I Sandeep Amin 7337 I Ian Armstrong 7260 I Richard Does 8126

No	DATE	REVISIONS	BY
A	01/09/2017	ISSUED FOR TENDER	IC

0 0.5 1 1.5 2 2.5 m
SCALE BAR - 1:50

0 0.1 0.2 0.3 0.4 0.5 m
SCALE BAR - 1:10

ARCHITECT

DesignInc| Lacoste + Stevenson| bmc2
architects in association

DesignInc Sydney PTY LIMITED ACN 003008820
L12 / 77 PACIFIC HWY NORTH SYDNEY NSW 2060 AUSTRALIA
PO BOX 651 NORTH SYDNEY NSW 2059 AUSTRALIA
T +612 8905 7100 F +612 8905 7199
www.designinc.com.au E sydney@sydney.designinc.com.au
Architecture Urban Design Interiors

CLIENT

PROJECT
LINDFIELD LEARNING VILLAGE
Eton Road,
Lindfield NSW 2070

TITLE
INSITU TERRAZZO SEATING DETAILS

N

DRAWN BY	IC
SCALES	AS SHOWN @ A1
PLOT DATE	01/09/2017
PROJECT Nº.	S151441
DRAWING Nº.	LA-5212
REVISION	A

DRAWING STATUS	REVIEWED BY	SIGNATURE	DATE
TENDER	MR		

QUALITY CERTIFIED ISO 9001

Completion of the Drawing Status is evidence the design has been verified as conforming to the requirements of the Project M.S. Plan. Initialling the "Drawn By" box confirms that this drawing has been prepared in conformity with DesignInc Sydney M.S. procedures.

TENDER

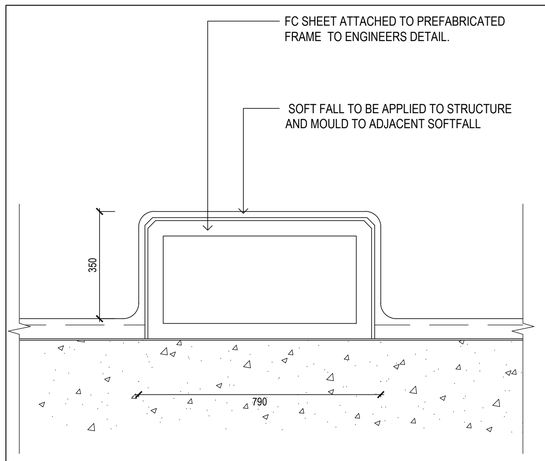

01 SOFTFALL SEATING TYPE 1 & 2 TYPICAL
SCALE 1 : 10

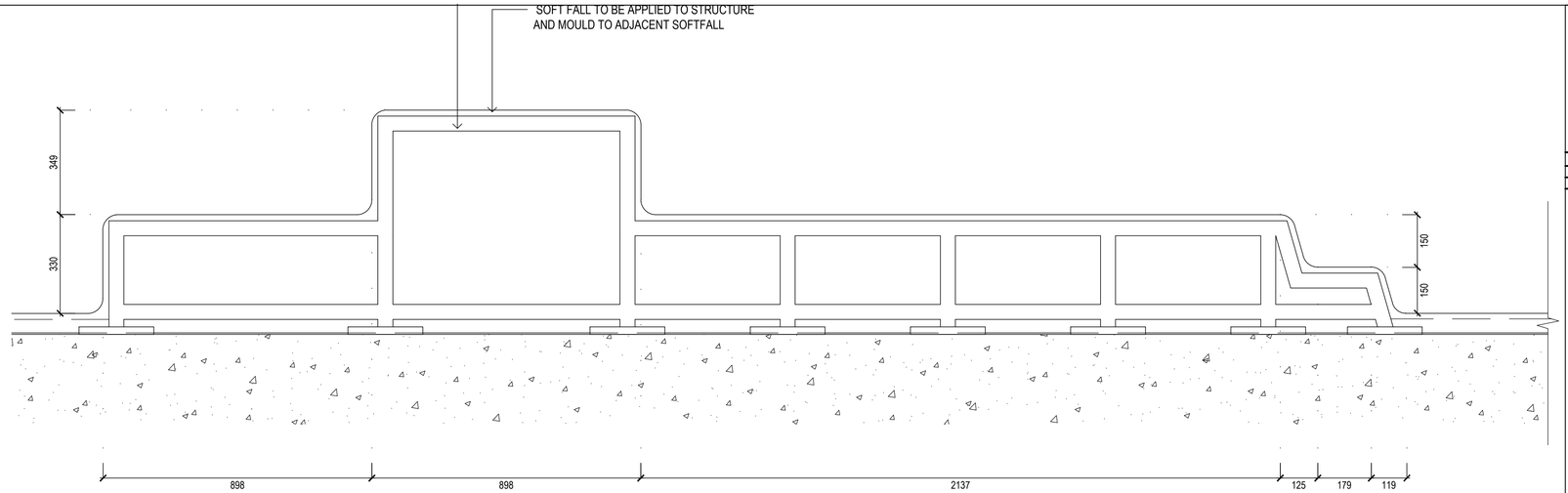

04 SEATING SOFTFALL TYPE 3 TYPICAL - LONG SECTION
SCALE 1 : 10

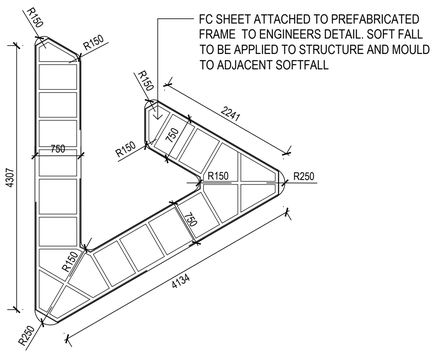

02 SEATING SOFTFALL TYPE 1 - PLAN
SCALE 1:50

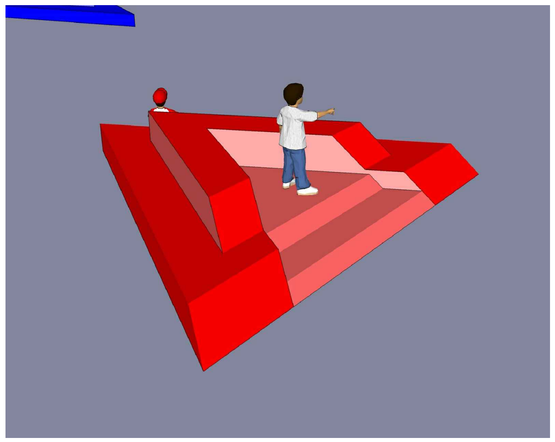

05 SEATING SOFTFALL TYPE 3 - 3D FOR INFORMATION
N.T.S

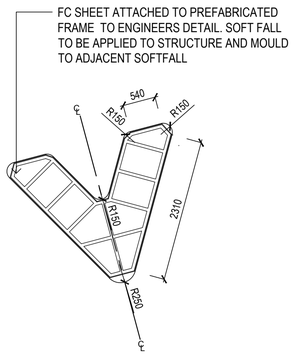

03 SEATING SOFTFALL TYPE 2 - PLAN
SCALE 1:50

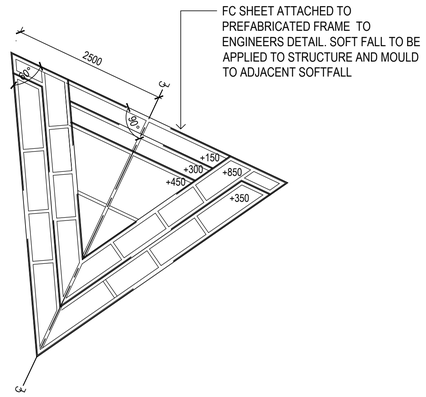

06 SEATING SOFTFALL TYPE 3 - PLAN
1:50

NOT FOR CONSTRUCTION

© Copyright DesignInc Sydney Pty Limited

This drawing is protected by copyright. All rights are reserved. Unless permitted under the Copyright Act 1968, no part of this drawing may in any form or by any means be reproduced, published, broadcast or transmitted without the prior written permission of the copyright owner.

Please note

If the Status of this drawing is not signed off For Construction it may be subject to change, alteration or amendment at the discretion of DesignInc Sydney Pty Limited. If so, DesignInc Sydney Pty Limited is not liable for any loss, damage, harm or injury whether special, consequential, direct or indirect, suffered by you or any other person as a result of your use of this drawing for construction purposes.

Figured dimensions take preference to scale readings. Verify all dimensions on site. Report any discrepancies to the Architect for decision before proceeding with the work.

Nominated Architects

Anthony Quan 5421 I Sandeep Amin 7337 I Ian Armstrong 7260 I Richard Does 8126

No	DATE	REVISIONS	BY
A	08/08/2017	ISSUED FOR TENDER	IC
B	01/09/2017	ISSUED FOR TENDER	IC

SCALE BAR - 1:50 (0, 0.5, 1, 1.5, 2, 2.5 m)

SCALE BAR - 1:10 (0, 0.1, 0.2, 0.3, 0.4, 0.5 m)

ARCHITECT

DesignInc| Lacoste + Stevenson| bmc2
architects in association

DesignInc Sydney PTY LIMITED ACN 003008820
L12 / 77 PACIFIC HWY NORTH SYDNEY NSW 2060 AUSTRALIA
PO BOX 651 NORTH SYDNEY NSW 2059 AUSTRALIA
T +612 8905 7100 F +612 8905 7199
www.designinc.com.au E sydney@sydney.designinc.com.au
Architecture Urban Design Interiors

CLIENT

PROJECT: LINDFIELD LEARNING VILLAGE
Eton Road,
Lindfield NSW 2070

TITLE: SEATING SOFTFALL DETAILS

DRAWN BY	IC
SCALES	AS SHOWN @ A1
PLOT DATE	01/09/2017
PROJECT Nº.	S151441
DRAWING Nº.	LA-5220
REVISION	B

DRAWING STATUS	REVIEWED BY	SIGNATURE	DATE
TENDER	MR		

QUALITY CERTIFIED ISO 9001

Completion of the Drawing Status is evidence the design has been verified as conforming to the requirements of the Project M.S. Plan. Initialling the "Drawn By" box confirms that this drawing has been prepared in conformity with DesignInc Sydney M.S. procedures.

TENDER

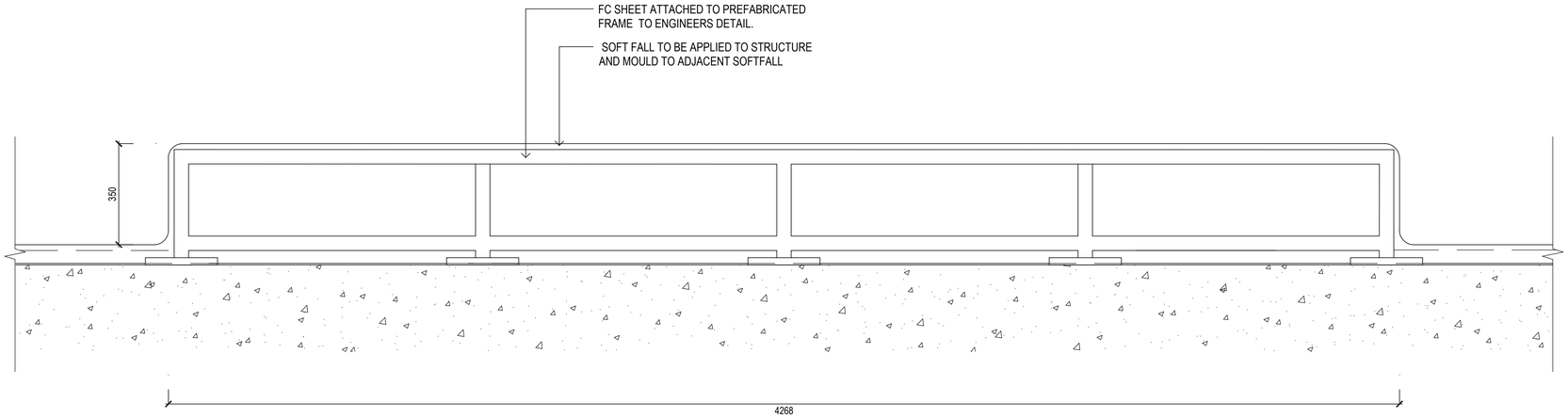

01 SEATING SOFTFALL TYPE 4 - TYPICAL
1:10

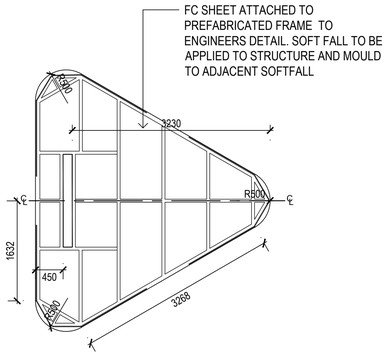

02 SEATING SOFTFALL TYPE 4 - PLAN
1:50

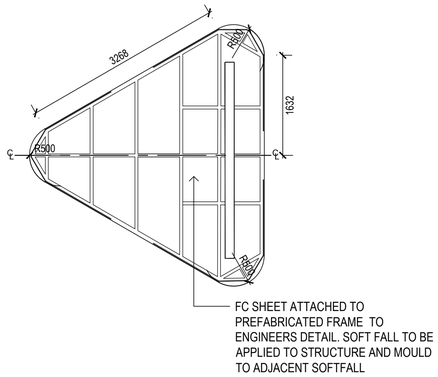

04 SEATING SOFTFALL TYPE 6 - PLAN
SCALE 1 : 50

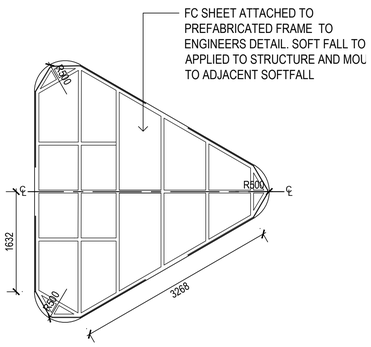

03 SEATING SOFTFALL TYPE 5 - PLAN
SCALE 1 : 50

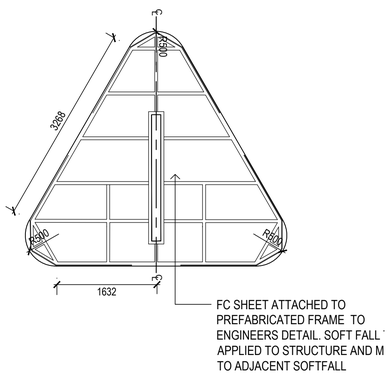

05 SEATING SOFTFALL TYPE 7 - PLAN
SCALE 1 : 50

NOT FOR CONSTRUCTION

© Copyright DesignInc Sydney Pty Limited

This drawing is protected by copyright. All rights are reserved. Unless permitted under the Copyright Act 1968, no part of this drawing may in any form or by any means be reproduced, published, broadcast or transmitted without the prior written permission of the copyright owner.

Please note

If the Status of this drawing is not signed off For Construction it may be subject to change, alteration or amendment at the discretion of DesignInc Sydney Pty Limited. If so, DesignInc Sydney Pty Limited is not liable for any loss, damage, harm or injury whether special, consequential, direct or indirect, suffered by you or any other person as a result of your use of this drawing for construction purposes.

Figured dimensions take preference to scale readings. Verify all dimensions on site. Report any discrepancies to the Architect for decision before proceeding with the work.

Nominated Architects

Anthony Quan 5421 I Sandeep Amin 7337 I Ian Armstrong 7260 I Richard Does 8126

No	DATE	REVISIONS	BY
A	08/08/2017	ISSUED FOR TENDER	IC
B	01/09/2017	ISSUED FOR TENDER	IC

0 0.5 1 1.5 2 2.5 m
SCALE BAR - 1:50

0 0.1 0.2 0.3 0.4 0.5 m
SCALE BAR - 1:10

ARCHITECT

DesignInc| Lacoste + Stevenson| bmc2
architects in association

DesignInc Sydney PTY LIMITED ACN 003008820
L12 / 77 PACIFIC HWY NORTH SYDNEY NSW 2060 AUSTRALIA
PO BOX 651 NORTH SYDNEY NSW 2059 AUSTRALIA
T +612 8905 7100 F +612 8905 7199
www.designinc.com.au E sydney@sydney.designinc.com.au
Architecture Urban Design Interiors

CLIENT

PROJECT
LINDFIELD LEARNING VILLAGE
Eton Road,
Lindfield NSW 2070

TITLE
SEATING SOFTFALL DETAILS

N

DRAWN BY	IC
SCALES	AS SHOWN @ A1
PLOT DATE	01/09/2017
PROJECT Nº.	S151441
DRAWING Nº.	LA-5230
REVISION	B

DRAWING STATUS	REVIEWED BY	SIGNATURE	DATE
TENDER	MR		

QUALITY CERTIFIED ISO 9001

Completion of the Drawing Status is evidence the design has been verified as conforming to the requirements of the Project M.S. Plan. Initialling the "Drawn By" box confirms that this drawing has been prepared in conformity with DesignInc Sydney M.S. procedures.

TENDER

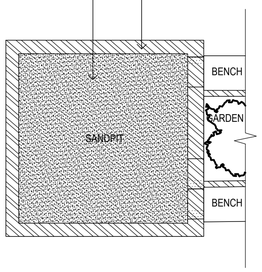

01 SANDPIT TYPE 1 - PLAN
SCALE 1 : 50

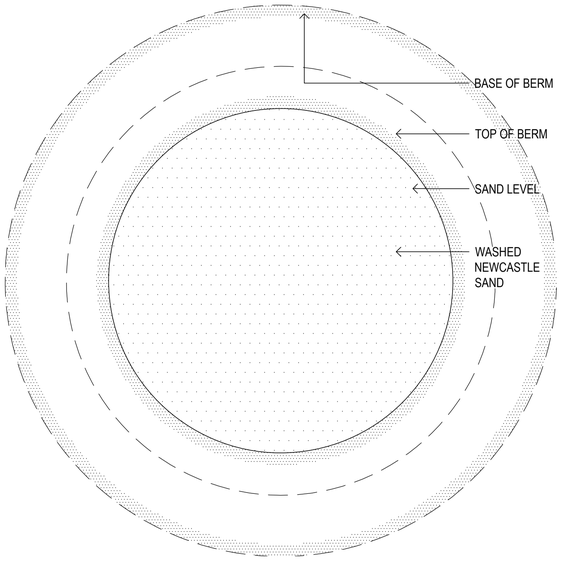

03 SANDPIT TYPE 2 - PLAN
SCALE 1 : 50

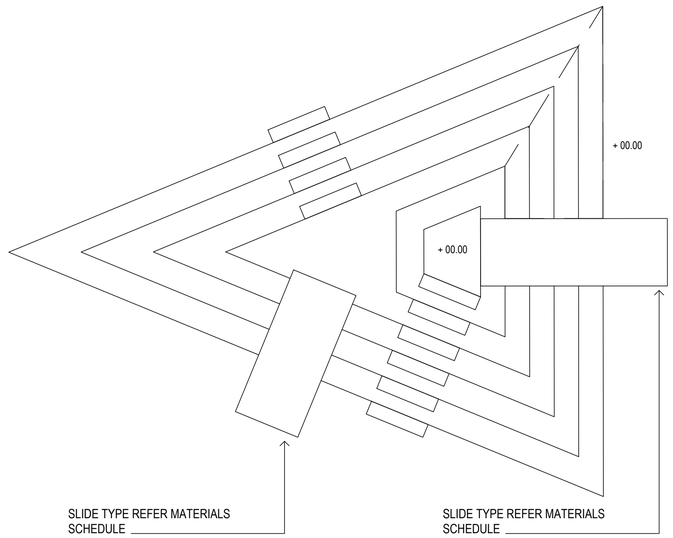

05 PLAY FEATURE 1 - PLAN
SCALE 1 : 50

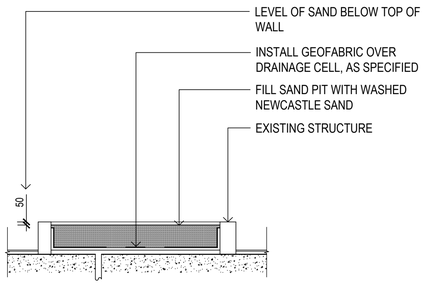

02 SANDPIT TYPE 1 - SECTION
SCALE 1 : 50

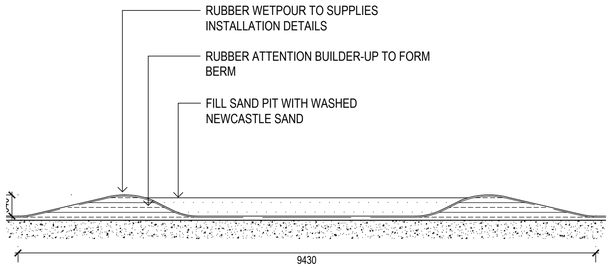

04 SANDPIT TYPE 2 - SECTION
SCALE 1 : 50

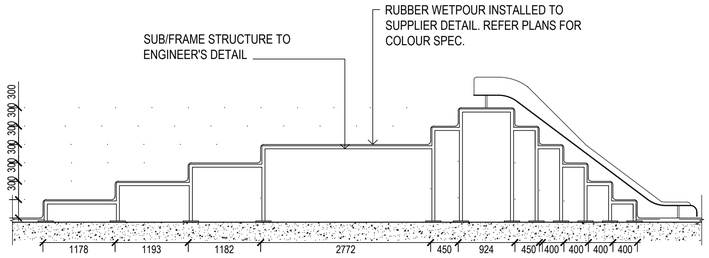

06 PLAY FEATURE 1 - SECTION
SCALE 1 : 50

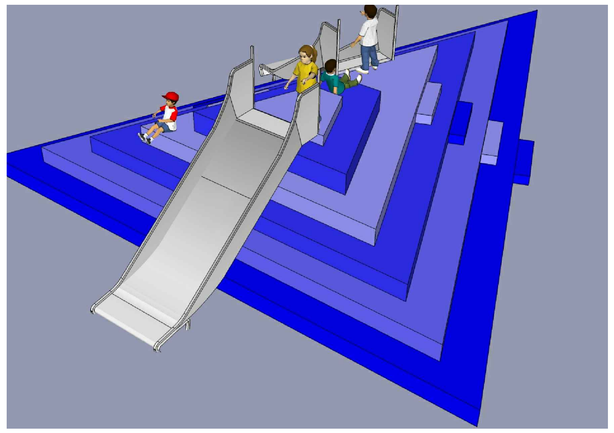

07 PLAY FEATURE 1 - 3D FOR INFORMATION
N.T.S

NOT FOR CONSTRUCTION

© **Copyright DesignInc Sydney Pty Limited**

This drawing is protected by copyright. All rights are reserved. Unless permitted under the Copyright Act 1968, no part of this drawing may in any form or by any means be reproduced, published, broadcast or transmitted without the prior written permission of the copyright owner.

Please note

If the Status of this drawing is not signed off For Construction it may be subject to change, alteration or amendment at the discretion of DesignInc Sydney Pty Limited. If so, DesignInc Sydney Pty Limited is not liable for any loss, damage, harm or injury whether special, consequential, direct or indirect, suffered by you or any other person as a result of your use of this drawing for construction purposes.

Figured dimensions take preference to scale readings. Verify all dimensions on site. Report any discrepancies to the Architect for decision before proceeding with the work.

Nominated Architects
Anthony Quan 5421 I Sandeep Amin 7337 I Ian Armstrong 7260 I Richard Does 8126

No	DATE	REVISIONS	BY
A	08/08/2017	ISSUED FOR TENDER	IC
B	01/09/2017	ISSUED FOR TENDER	IC

SCALE BAR - 1:50 (0, 0.5, 1, 1.5, 2, 2.5 m)

SCALE BAR - 1:10 (0, 0.1, 0.2, 0.3, 0.4, 0.5 m)

ARCHITECT

DesignInc| Lacoste + Stevenson| bmc2
architects in association

DesignInc Sydney PTY LIMITED ACN 003008820
L12 / 77 PACIFIC HWY NORTH SYDNEY NSW 2060 AUSTRALIA
PO BOX 651 NORTH SYDNEY NSW 2059 AUSTRALIA
T +612 8905 7100 F +612 8905 7199
www.designinc.com.au E sydney@sydney.designinc.com.au
Architecture Urban Design Interiors

CLIENT

PROJECT: LINDFIELD LEARNING VILLAGE
Eton Road,
Lindfield NSW 2070

TITLE: PLAY ELEMENTS DETAILS

DRAWN BY	IC
SCALES	AS SHOWN @ A1
PLOT DATE	01/09/2017
PROJECT Nº.	S151441
DRAWING Nº.	LA-5310
REVISION	B

DRAWING STATUS	REVIEWED BY	SIGNATURE	DATE
TENDER	MR		

QUALITY CERTIFIED ISO 9001 — Completion of the Drawing Status is evidence the design has been verified as conforming to the requirements of the Project M.S. Plan. Initialling the "Drawn By" box confirms that this drawing has been prepared in conformity with DesignInc Sydney M.S. procedures.

TENDER

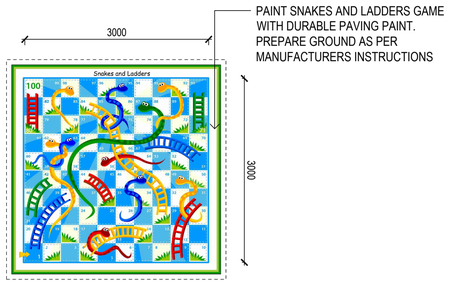

PAINT SNAKES AND LADDERS GAME WITH DURABLE PAVING PAINT. PREPARE GROUND AS PER MANUFACTURERS INSTRUCTIONS

01 SNAKES AND LADDERS PATTERN - PLAN FOR INFORMATION
SCALE 1 : 50

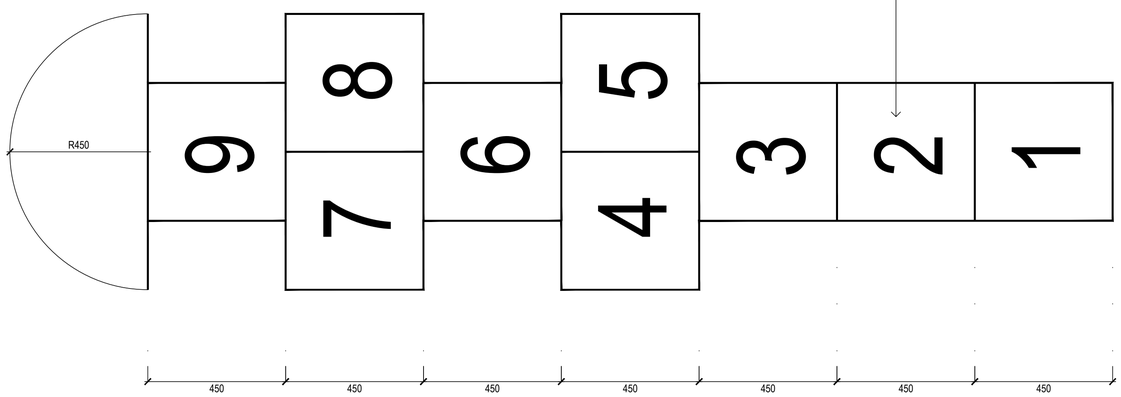

PAINT HOPSCOTCH GAME WITH DURABLE PAVING PAINT. PREPARE GROUND AS PER MANUFACTURERS INSTRUCTIONS

02 HOPSCOTCH PATTERN - PLAN
SCALE 1 : 50

© Copyright DesignInc Sydney Pty Limited

This drawing is protected by copyright. All rights are reserved. Unless permitted under the Copyright Act 1968, no part of this drawing may in any form or by any means be reproduced, published, broadcast or transmitted without the prior written permission of the copyright owner.

Please note

If the Status of this drawing is not signed off For Construction it may be subject to change, alteration or amendment at the discretion of DesignInc Sydney Pty Limited. If so, DesignInc Sydney Pty Limited is not liable for any loss, damage, harm or injury whether special, consequential, direct or indirect, suffered by you or any other person as a result of your use of this drawing for construction purposes.

Figured dimensions take preference to scale readings. Verify all dimensions on site. Report any discrepancies to the Architect for decision before proceeding with the work.

Nominated Architects

Anthony Quan 5421 I Sandeep Amin 7337 I Ian Armstrong 7260 I Richard Does 8126

No	DATE	REVISIONS	BY
A	08/08/2017	ISSUED FOR TENDER	IC
B	01/09/2017	ISSUED FOR TENDER	IC

SCALE BAR - 1:50

SCALE BAR - 1:10

ARCHITECT

DesignInc| Lacoste + Stevenson| bmc2
architects in association

DesignInc Sydney PTY LIMITED ACN 003008820
L12 / 77 PACIFIC HWY NORTH SYDNEY NSW 2060 AUSTRALIA
PO BOX 651 NORTH SYDNEY NSW 2059 AUSTRALIA
T +612 8905 7100 F +612 8905 7199
www.designinc.com.au E sydney@sydney.designinc.com.au
Architecture Urban Design Interiors

CLIENT

PROJECT
LINDFIELD LEARNING VILLAGE
Eton Road,
Lindfield NSW 2070

TITLE
PLAY ELEMENTS DETAILS 2

N

DRAWN BY	IC
SCALES	AS SHOWN @ A1
PLOT DATE	01/09/2017
PROJECT Nº.	S151441
DRAWING Nº.	LA-5320
REVISION	B

DRAWING STATUS	REVIEWED BY	SIGNATURE	DATE
TENDER	MR		

QUALITY CERTIFIED ISO 9001

Completion of the Drawing Status is evidence the design has been verified as conforming to the requirements of the Project M.S. Plan. Initialling the "Drawn By" box confirms that this drawing has been prepared in conformity with DesignInc Sydney M.S. procedures.

TENDER

NOT FOR CONSTRUCTION

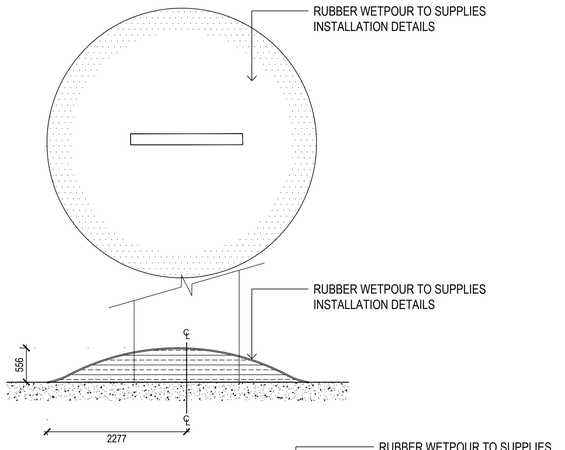

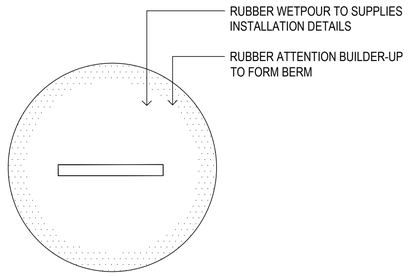

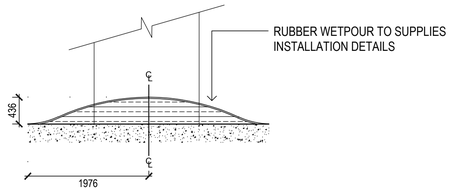

01 SOFTFALL MOUND TYPE 1 - PLAN & SECTION
SCALE 1 : 50

NOT FOR CONSTRUCTION

© Copyright DesignInc Sydney Pty Limited

This drawing is protected by copyright. All rights are reserved. Unless permitted under the Copyright Act 1968, no part of this drawing may in any form or by any means be reproduced, published, broadcast or transmitted without the prior written permission of the copyright owner.

Please note

If the Status of this drawing is not signed off For Construction it may be subject to change, alteration or amendment at the discretion of DesignInc Sydney Pty Limited. If so, DesignInc Sydney Pty Limited is not liable for any loss, damage, harm or injury whether special, consequential, direct or indirect, suffered by you or any other person as a result of your use of this drawing for construction purposes.

Figured dimensions take preference to scale readings. Verify all dimensions on site. Report any discrepancies to the Architect for decision before proceeding with the work.

Nominated Architects

Anthony Quan 5421 I Sandeep Amin 7337 I Ian Armstrong 7260 I Richard Does 8126

No	DATE	REVISIONS	BY
A	08/08/2017	ISSUED FOR TENDER	IC
B	01/09/2017	ISSUED FOR TENDER	IC

0 0.5 1 1.5 2 2.5 m
SCALE BAR - 1:50

0 0.1 0.2 0.3 0.4 0.5 m
SCALE BAR - 1:10

ARCHITECT

DesignInc| Lacoste + Stevenson| bmc2
architects in association

DesignInc Sydney PTY LIMITED ACN 003008820
L12 / 77 PACIFIC HWY NORTH SYDNEY NSW 2060 AUSTRALIA
PO BOX 651 NORTH SYDNEY NSW 2059 AUSTRALIA
T +612 8905 7100 F +612 8905 7199
www.designinc.com.au E sydney@sydney.designinc.com.au

Architecture Urban Design Interiors

CLIENT

PROJECT
LINDFIELD LEARNING VILLAGE
Eton Road,
Lindfield NSW 2070

TITLE
SOFTFALL MOUND DETAILS

N

DRAWN BY	IC
SCALES	AS SHOWN @ A1
PLOT DATE	01/09/2017

PROJECT Nº.	S151441	REVISION B
DRAWING Nº.	LA-5410	

DRAWING STATUS	REVIEWED BY	SIGNATURE	DATE
TENDER	MR		

QUALITY CERTIFIED ISO 9001
Completion of the Drawing Status is evidence the design has been verified as conforming to the requirements of the Project M.S. Plan. Initialling the "Drawn By" box confirms that this drawing has been prepared in conformity with DesignInc Sydney M.S. procedures.

TENDER

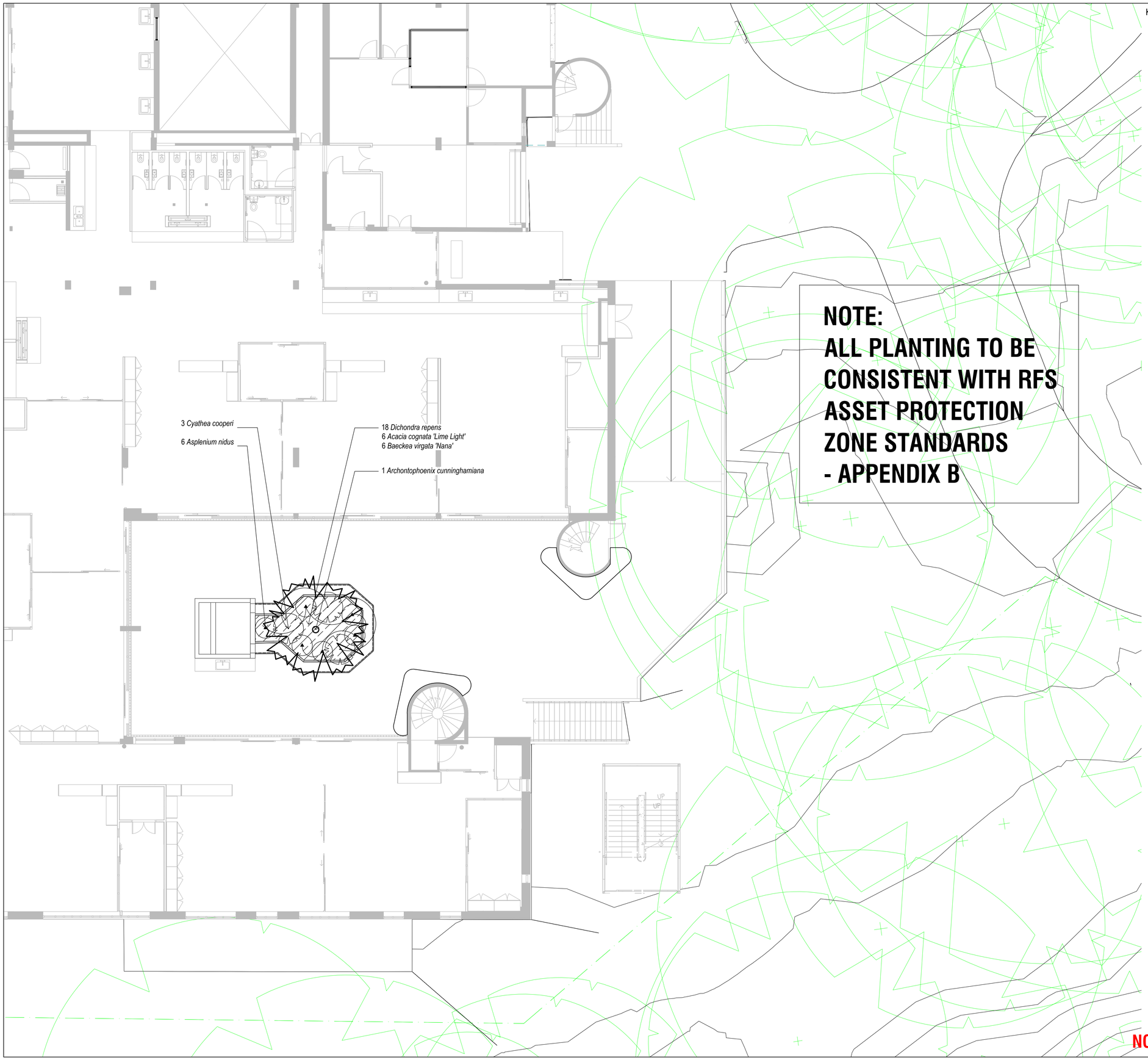

NOTE:
ALL PLANTING TO BE CONSISTENT WITH RFS ASSET PROTECTION ZONE STANDARDS - APPENDIX B

KEY PLAN

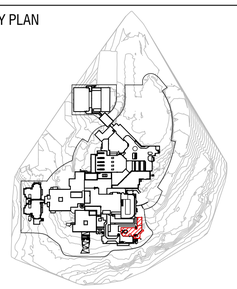

© Copyright DesignInc Sydney Pty Limited

This drawing is protected by copyright. All rights are reserved. Unless permitted under the Copyright Act 1968, no part of this drawing may in any form or by any means be reproduced, published, broadcast or transmitted without the prior written permission of the copyright owner.

Please note

If the Status of this drawing is not signed off For Construction it may be subject to change, alteration or amendment at the discretion of DesignInc Sydney Pty Limited. If so, DesignInc Sydney Pty Limited is not liable for any loss, damage, harm or injury whether special, consequential, direct or indirect, suffered by you or any other person as a result of your use of this drawing for construction purposes.

Figured dimensions take preference to scale readings. Verify all dimensions on site. Report any discrepancies to the Architect for decision before proceeding with the work.

Nominated Architects

Anthony Quan 5421 I Sandeep Amin 7337 I Ian Armstrong 7260 I Richard Does 8126

No	DATE	REVISIONS	BY
A	01/09/2017	ISSUED FOR TENDER	IC
B	19/10/2017	RFS NOTE ADDED	FA

LENGEND

- PLANTING CATEGORY B
- PROPOSED FERN TREE
- PROPOSED PALM TREE
- PROPOSED SHRUB

REFER TO LA-5100 FOR PLANTING SCHEDULE

ARCHITECT

DesignInc| Lacoste + Stevenson| bmc2
architects in association

DesignInc Sydney PTY LIMITED ACN 003008820
L12 / 77 PACIFIC HWY NORTH SYDNEY NSW 2060 AUSTRALIA
PO BOX 651 NORTH SYDNEY NSW 2059 AUSTRALIA
T +612 8905 7100 F +612 8905 7199
www.designinc.com.au E sydney@sydney.designinc.com.au
Architecture Urban Design Interiors

CLIENT

PROJECT
LINDFIELD LEARNING VILLAGE
Eton Road,
Lindfield NSW 2070

TITLE
PLANTING PLAN
LEVEL 2

N

DRAWN BY	IC
SCALES	1 : 100 @ A1
PLOT DATE	01/09/2017
PROJECT Nº.	S151441
DRAWING Nº.	LA-2121
REVISION	B

DRAWING STATUS	REVIEWED BY	SIGNATURE	DATE
TENDER	MR		

QUALITY CERTIFIED ISO 9001

Completion of the Drawing Status is evidence the design has been verified as conforming to the requirements of the Project M.S. Plan. Initialling the "Drawn By" box confirms that this drawing has been prepared in conformity with DesignInc Sydney M.S. procedures.

NOT FOR CONSTRUCTION

TENDER

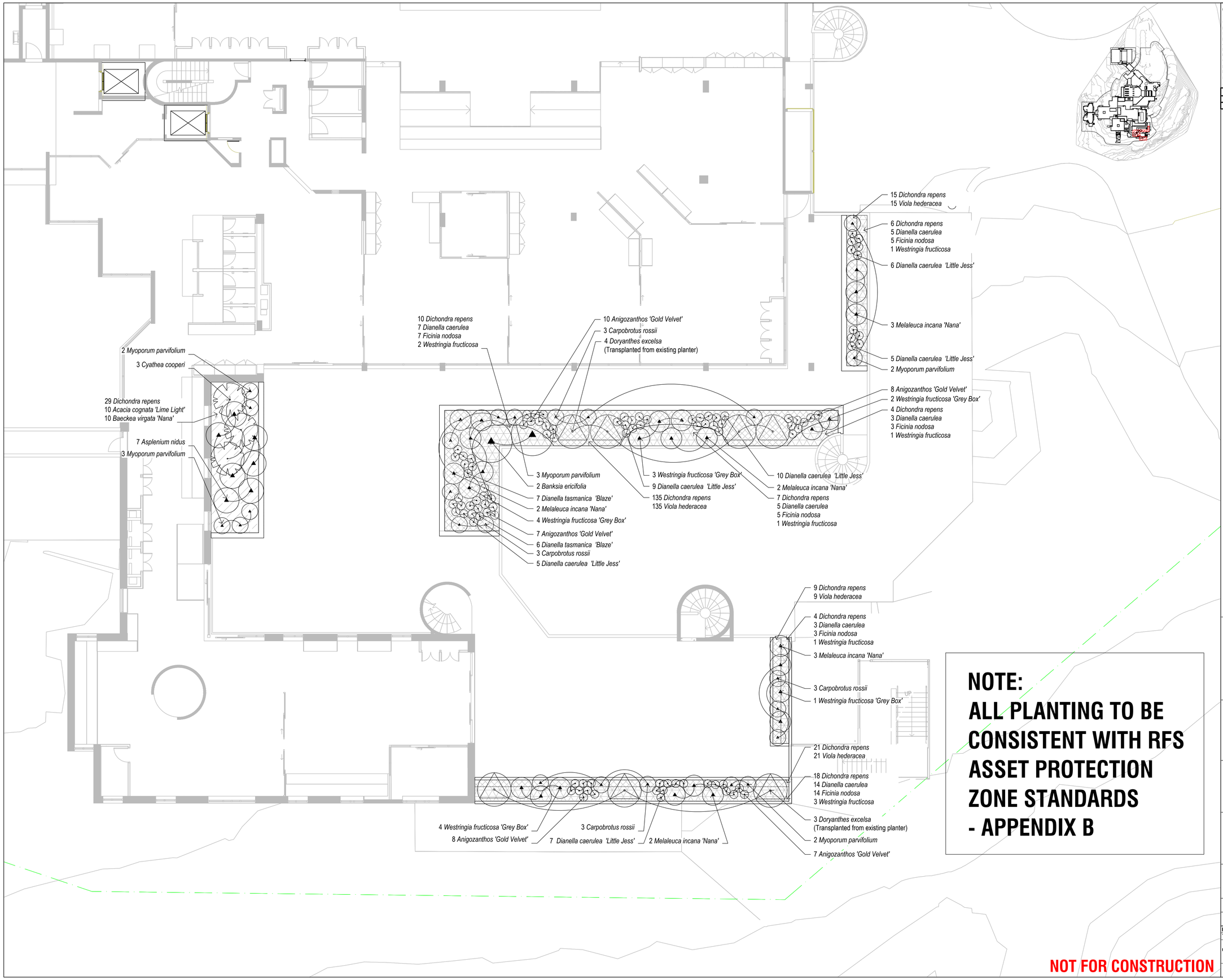

NOTE:
ALL PLANTING TO BE CONSISTENT WITH RFS ASSET PROTECTION ZONE STANDARDS - APPENDIX B

NOT FOR CONSTRUCTION

© **Copyright DesignInc Sydney Pty Limited**

This drawing is protected by copyright. All rights are reserved. Unless permitted under the Copyright Act 1968, no part of this drawing may in any form or by any means be reproduced, published, broadcast or transmitted without the prior written permission of the copyright owner.

Please note

If the Status of this drawing is not signed off For Construction it may be subject to change, alteration or amendment at the discretion of DesignInc Sydney Pty Limited. If so, DesignInc Sydney Pty Limited is not liable for any loss, damage, harm or injury whether special, consequential, direct or indirect, suffered by you or any other person as a result of your use of this drawing for construction purposes.

Figured dimensions take preference to scale readings. Verify all dimensions on site. Report any discrepancies to the Architect for decision before proceeding with the work.

Nominated Architects

Anthony Quan 5421 I Sandeep Amin 7337 I Ian Armstrong 7260 I Richard Does 8126

No	DATE	REVISIONS	BY
A	01/09/2017	ISSUED FOR TENDER	IC
B	19/10/2017	RFS NOTE ADDED	FA

LEGEND

- PLANTING CATEGORY A
- PLANTING CATEGORY B
- PLANTING CATEGORY C
- FEATURE FERN TREE
- TRANSPLANTED SHRUB
- PROPOSED SHRUB

NOTE:
REFER TO LA-5100 FOR PLANTING SCHEDULE.
CONTRACTOR TO PROTECT ALL EXISTING *Doryanthes excelsa* DURING CONSTRUCTION TO BE TRANSPLANTED INTO NEW LOCATIONS.

0 1 2 3 4 5 m
SCALE BAR - 1:100

ARCHITECT

DesignInc| Lacoste + Stevenson| bmc2
architects in association

DesignInc Sydney PTY LIMITED ACN 003008820
L12 / 77 PACIFIC HWY NORTH SYDNEY NSW 2060 AUSTRALIA
PO BOX 651 NORTH SYDNEY NSW 2059 AUSTRALIA
T +612 8905 7100 F +612 8905 7199
www.designinc.com.au E sydney@sydney.designinc.com.au
Architecture Urban Design Interiors

CLIENT

PROJECT
LINDFIELD LEARNING VILLAGE
Eton Road,
Lindfield NSW 2070

TITLE
PLANTING PLAN
LEVEL 3

DRAWN BY	IC
SCALES	1 : 100 @ A1
PLOT DATE	01/09/2017
PROJECT Nº.	S151441
DRAWING Nº.	LA-2131
REVISION	B

DRAWING STATUS	REVIEWED BY	SIGNATURE	DATE
TENDER	MR		

QUALITY CERTIFIED ISO 9001

Completion of the Drawing Status is evidence the design has been verified as conforming to the requirements of the Project M.S. Plan. Initialling the "Drawn By" box confirms that this drawing has been prepared in conformity with DesignInc Sydney M.S. procedures.

TENDER

PLOTTED :

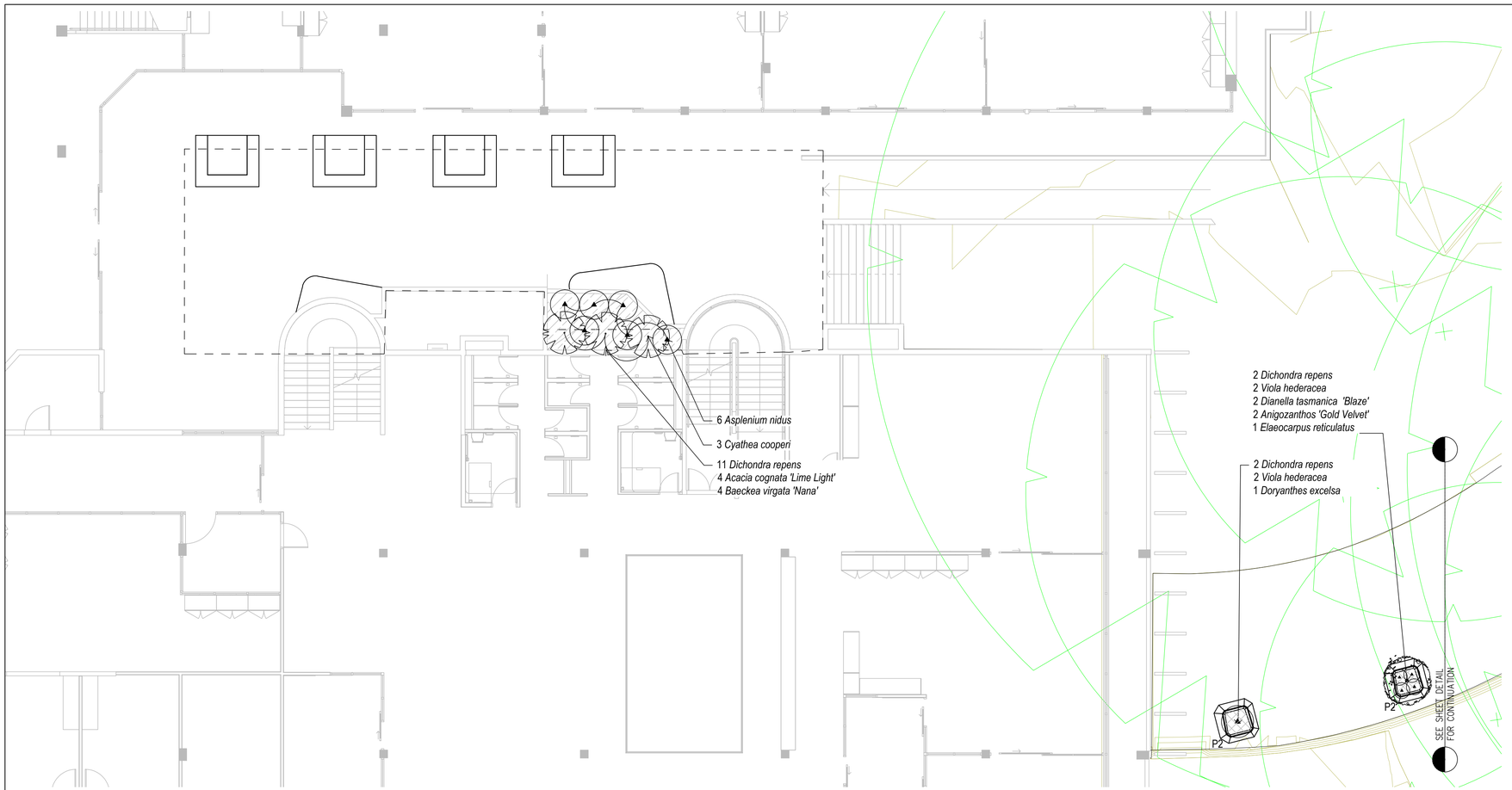

PLAN INSERT

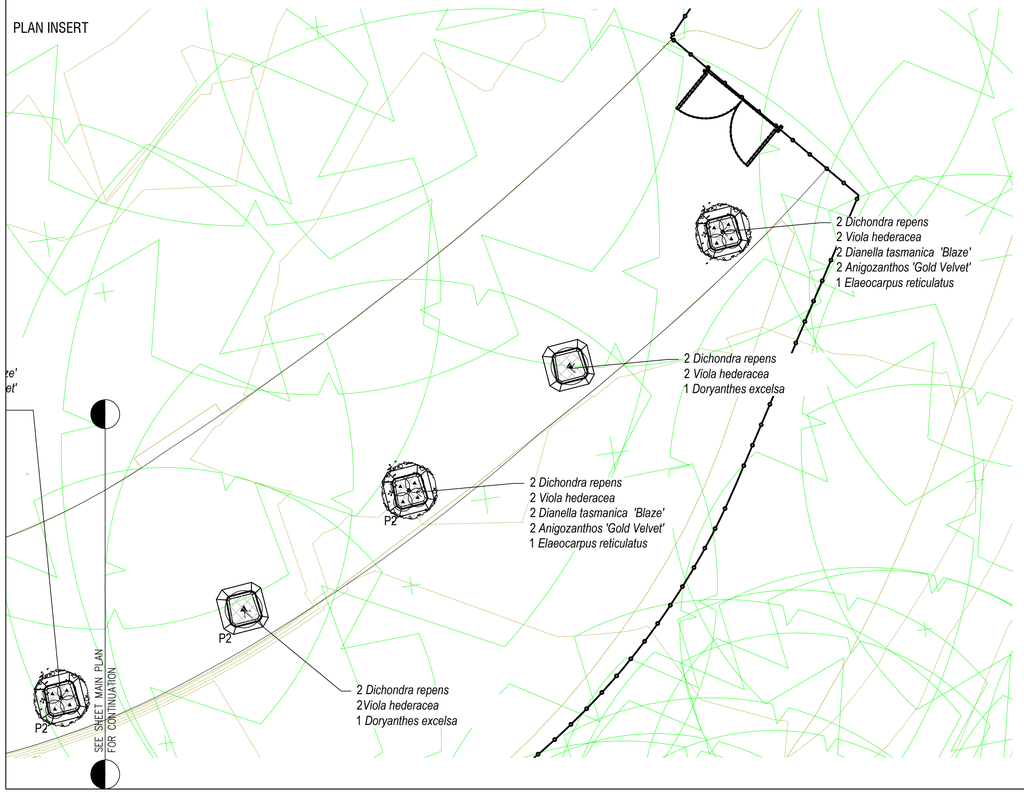

NOTE:
ALL PLANTING TO BE CONSISTENT WITH RFS ASSET PROTECTION ZONE STANDARDS - APPENDIX B

NOT FOR CONSTRUCTION

KEY PLAN

© **Copyright DesignInc Sydney Pty Limited**
This drawing is protected by copyright. All rights are reserved. Unless permitted under the Copyright Act 1968, no part of this drawing may in any form or by any means be reproduced, published, broadcast or transmitted without the prior written permission of the copyright owner.

Please note
If the Status of this drawing is not signed off For Construction it may be subject to change, alteration or amendment at the discretion of DesignInc Sydney Pty Limited. If so, DesignInc Sydney Pty Limited is not liable for any loss, damage, harm or injury whether special, consequential, direct or indirect, suffered by you or any other person as a result of your use of this drawing for construction purposes.

Figured dimensions take preference to scale readings. Verify all dimensions on site. Report any discrepancies to the Architect for decision before proceeding with the work.

Nominated Architects
Anthony Quan 5421 I Sandeep Amin 7337 I Ian Armstrong 7260 I Richard Does 8126

No	DATE	REVISIONS	BY
A	08/08/2017	ISSUED FOR TENDER	IC
B	01/09/2017	ISSUED FOR TENDER	IC
C	19/10/2017	RFS NOTE ADDED	FA

LEGEND

- PLANTING CATEGORY A
- PLANTING CATEGORY B
- PLANTING CATEGORY C
- EXISTING SMALL TREE
- EXISTING TREE TO BE RETAINED
- FEATURE FERN TREE
- PROPOSED TREE
- PROPOSED SHRUB

NOTE:
REFER TO LA-5100 FOR PLANTING SCHEDULE

0 1 2 3 4 5 m
SCALE BAR - 1:100

ARCHITECT

DesignInc| Lacoste + Stevenson| bmc2
architects in association

DesignInc Sydney PTY LIMITED ACN 003008820
L12 / 77 PACIFIC HWY NORTH SYDNEY NSW 2060 AUSTRALIA
PO BOX 651 NORTH SYDNEY NSW 2059 AUSTRALIA
T +612 8905 7100 F +612 8905 7199
www.designinc.com.au E sydney@sydney.designinc.com.au
Architecture Urban Design Interiors

CLIENT

PROJECT
LINDFIELD LEARNING VILLAGE
Eton Road,
Lindfield NSW 2070

TITLE
PLANTING PLAN - LEVEL 4
1 OF 2

N

DRAWN BY	IC
SCALES	1 : 100 @ A1
PLOT DATE	01/09/2017
PROJECT Nº.	S151441
REVISION	C
DRAWING Nº.	LA-2141

DRAWING STATUS	REVIEWED BY	SIGNATURE	DATE
TENDER	MR		

QUALITY CERTIFIED ISO 9001
Completion of the Drawing Status is evidence the design has been verified as conforming to the requirements of the Project M.S. Plan. Initialling the "Drawn By" box confirms that this drawing has been prepared in conformity with DesignInc Sydney M.S. procedures.

TENDER

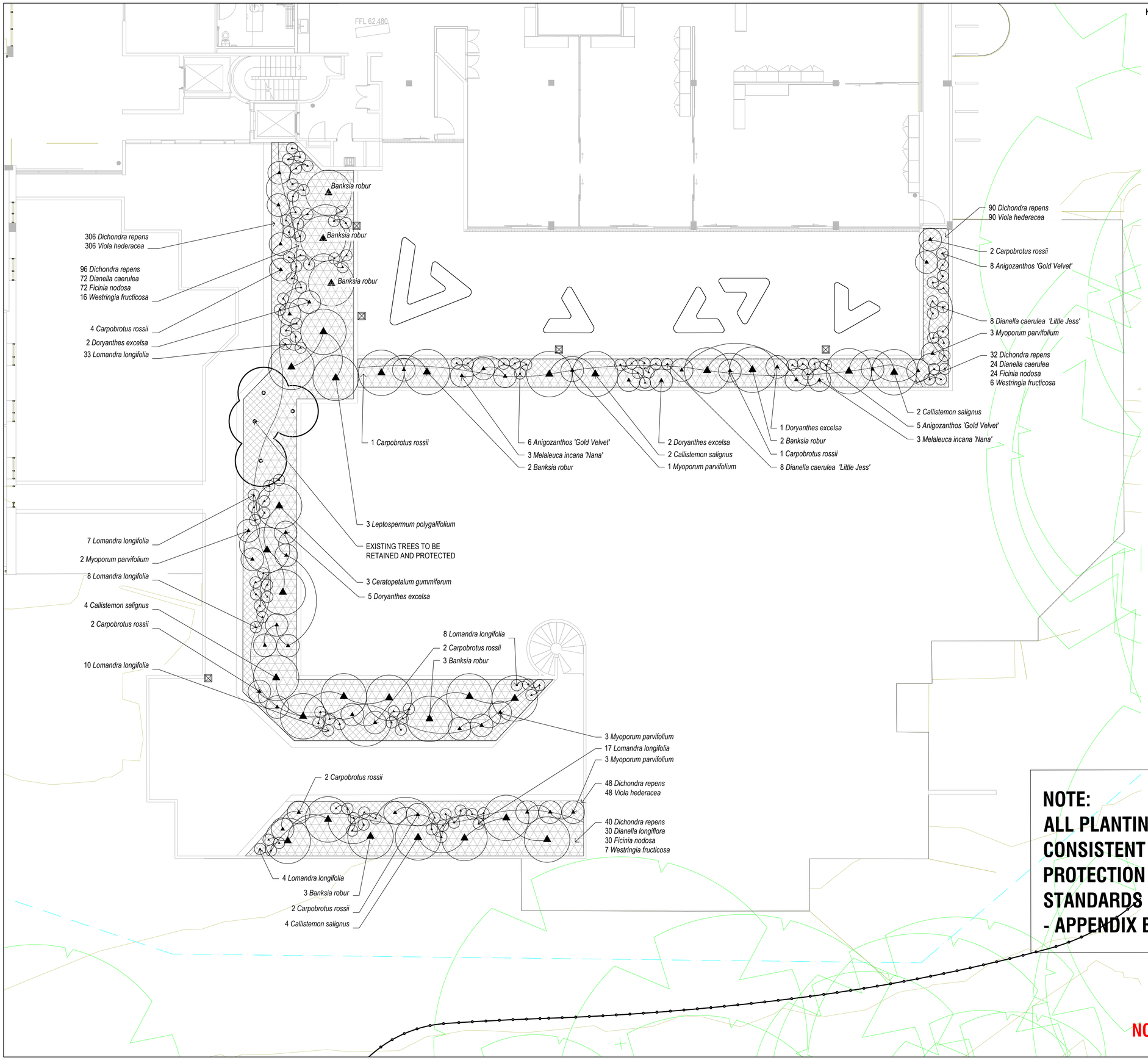

KEY PLAN

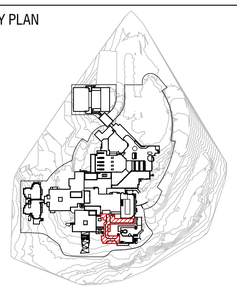

© Copyright DesignInc Sydney Pty Limited

This drawing is protected by copyright. All rights are reserved. Unless permitted under the Copyright Act 1968, no part of this drawing may in any form or by any means be reproduced, published, broadcast or transmitted without the prior written permission of the copyright owner.

Please note

If the Status of this drawing is not signed off For Construction it may be subject to change, alteration or amendment at the discretion of DesignInc Sydney Pty Limited. If so, DesignInc Sydney Pty Limited is not liable for any loss, damage, harm or injury whether special, consequential, direct or indirect, suffered by you or any other person as a result of your use of this drawing for construction purposes.

Figured dimensions take preference to scale readings. Verify all dimensions on site. Report any discrepancies to the Architect for decision before proceeding with the work.

Nominated Architects

Anthony Quan 5421 I Sandeep Amin 7337 I Ian Armstrong 7260 I Richard Does 8126

No	DATE	REVISIONS	BY
A	01/09/2017	ISSUED FOR TENDER	IC
B	19/10/2017	RFS NOTE ADDED	FA

LEGEND

- PLANTING CATEGORY A
- PLANTING CATEGORY B
- PLANTING CATEGORY C
- EXISTING SMALL TREE
- EXISTING TREE TO BE RETAINED
- FEATURE FERN TREE
- PROPOSED TREE
- PROPOSED SHRUB

NOTE:
REFER TO LA-5100 FOR PLANTING SCHEDULE

NOTE:
ALL PLANTING TO BE CONSISTENT WITH RFS ASSET PROTECTION ZONE STANDARDS - APPENDIX B

NOT FOR CONSTRUCTION

SCALE BAR - 1:100

ARCHITECT

DesignInc| Lacoste + Stevenson| bmc2
architects in association

DesignInc Sydney PTY LIMITED ACN 003008820
L12 / 77 PACIFIC HWY NORTH SYDNEY NSW 2060 AUSTRALIA
PO BOX 651 NORTH SYDNEY NSW 2059 AUSTRALIA
T +612 8905 7100 F +612 8905 7199
www.designinc.com.au E sydney@sydney.designinc.com.au
Architecture Urban Design Interiors

CLIENT

PROJECT
LINDFIELD LEARNING VILLAGE
Eton Road,
Lindfield NSW 2070

TITLE
PLANTING PLAN - LEVEL 4
2 OF 2

DRAWN BY	IC
SCALES	1 : 100 @ A1
PLOT DATE	01/09/2017
PROJECT Nº.	S151441
DRAWING Nº.	LA-2142
REVISION	B

DRAWING STATUS	REVIEWED BY	SIGNATURE	DATE
TENDER	MR		

QUALITY CERTIFIED ISO 9001

Completion of the Drawing Status is evidence the design has been verified as conforming to the requirements of the Project M.S. Plan. Initialling the "Drawn By" box confirms that this drawing has been prepared in conformity with DesignInc Sydney M.S. procedures.

TENDER

LINDFIELD LEARNING VILLAGE INDICATIVE PLANTING SCHEDULE

CAT.	Botanical Name	Common Name	HEIGHT RANGE	POT SIZE	QTY
	TREES				
	Archontophoenix cunninghamiana	Bangalow Palm	5-10m	75L	1
	Callistemon salignus	Willow Bottlebrush	4-6m	75L	12
	Ceratopetalum gummiferum	Christmas Bush	4-6m	75L	3
	Elaeocarpus reticulatus	Blueberry Ash	3-6m	75L	6
	Leptospermum polygafolium	Tantoon	5-7m	75L	3
	SHRUBS AND HEDGE				
B	*Acacia cognata 'Lime Light'*	Lime Light Acacia	0.5-1m	200mm	22
B	*Baeckea virgata 'Nana'*	Dwarf Baeckea	1-1.5m	200mm	22
	Banksia robur	Swamp Banksia	1.5-2.5m	200mm	10
	Banksia ericifolia	Heath Leaved Banksia	2-4m	75L	2
	Doryanthes excelsa	Gymea Lily	1-4m	200mm	22
	Melaleuca incana 'nana'	Grey Honey Myrtle	0.5-1m	200mm	22
C	*Westringia fruticosa*	Native Rosemary	0.5-1.2m	200mm	49
	Westringia fruticosa 'Grey Box'	Native Rosemary Nana	0.5-1.2m	200mm	14
	GRASS / GROUND COVER				
	Anigozanthos 'Gold Velvet'	Gold Velvet Kangaroo Paw	0.5-1m	140mm	73
	Carpobrotus rossii	Pig Face	0.1-0.2m	140mm	28
C	*Dianella caerulea*	Blue Flax Lily	0.5-1m	140mm	220
	Dianella caerule 'Little Jess'	Little Jess Dianella	0.4m	140mm	58
	Dianella tasmanica 'Blaz'	Blaze Dianella	0.5m	140mm	23
A,B,C	*Dichondra repens*	Dichondra	0.1-0.2m	140mm	1536
C	*Ficinia nodosa*	Knobby Club Rush	0.8-1m	140mm	220
	Myoporum parvifolium	Creeping Boobialla	0.3m	140mm	24
A	*Viola hederacea*	Native Violet	0.1-0.2m	140mm	1186
	Xanthorrhoea pillosa	Grass Tree	1.5-3m	75L	8
	FERN				
	Aspelenium nidus	Nest Fern	0.5-1.5m	200mm	20
	Cyathea cooperi	Fern Tree	2-5m	75L	9

LINDFIELD LEARNING VILLAGE INDICATIVE PLANTING CATEGORIES

Categories	Botanical Names	Rate (%)	Spacing	TOTAL AREA (m²)	Quantities
Category A					
	Dichondra repens	50	6/sqm	381	1146
	Viola hederacea	50	6/sqm		1146
Category B					
	Dichondra repens	20	6/sqm	48	58
	Acacia cognata 'Lime Light'	40	1/sqm		20
	Baeckea virgata 'Nana'	40	1/sqm		20
Category C					
	Dichondra repens	20	6/sqm	244	292
	Ficinia nodosa	30	3/sqm		220
	Dianella caerulea	30	3/sqm		220
	Westringia fructicosa	20	1/sqm		49

NOTE:
ALL PLANTING TO BE CONSISTENT WITH RFS ASSET PROTECTION ZONE STANDARDS - APPENDIX B

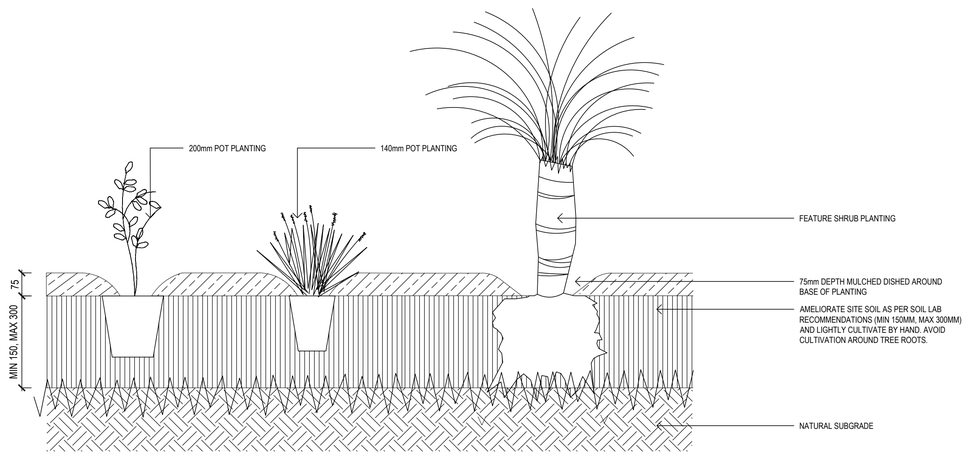

01 TYP. PLANTING DETAIL INTO NATURAL GROUND
SCALE 1 : 10

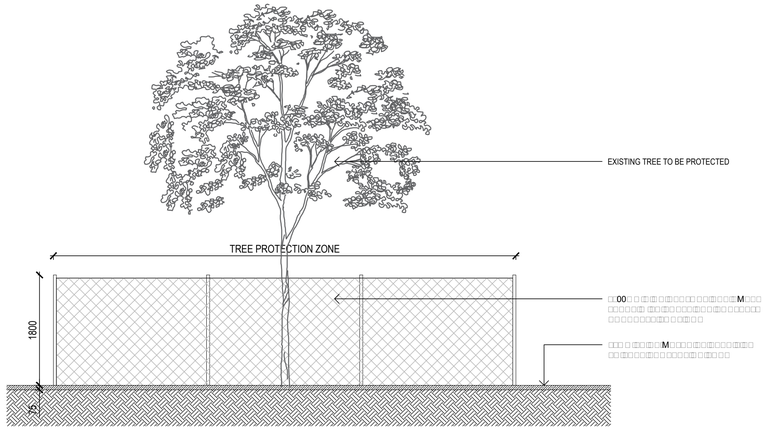

02 TYP. TREE PROTECTION FOR EXISTING TREES - ELEVATION
SCALE 1 : 50

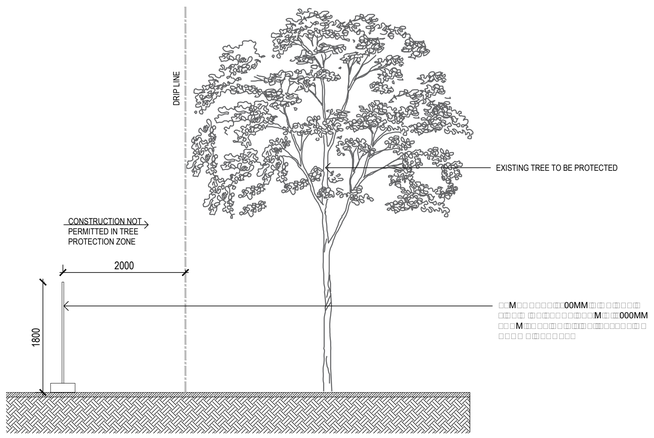

03 TYP. TREE PROTECTION FOR EXISTING TREES - SECTIONAL ELEVATION
SCALE 1 : 50

NOT FOR CONSTRUCTION

© Copyright DesignInc Sydney Pty Limited
This drawing is protected by copyright. All rights are reserved. Unless permitted under the Copyright Act 1968, no part of this drawing may in any form or by any means be reproduced, published, broadcast or transmitted without the prior written permission of the copyright owner.

Please note
If the Status of this drawing is not signed off For Construction it may be subject to change, alteration or amendment at the discretion of DesignInc Sydney Pty Limited. If so, DesignInc Sydney Pty Limited is not liable for any loss, damage, harm or injury whether special, consequential, direct or indirect, suffered by you or any other person as a result of your use of this drawing for construction purposes.

Figured dimensions take preference to scale readings. Verify all dimensions on site. Report any discrepancies to the Architect for decision before proceeding with the work.

Nominated Architects
Anthony Quan 5421 I Sandeep Amin 7337 I Ian Armstrong 7260 I Richard Does 8126

No	DATE	REVISIONS	BY
A	08/08/2017	ISSUED FOR PRE TENDER	IC
B	01/09/2017	ISSUED FOR PRE TENDER	IC
C	10/10/2017	RFS NOTE ADDED	FA

0 0.5 1 1.5 2 2.5 m
SCALE BAR - 1:50

0 0.1 0.2 0.3 0.4 0.5 m
SCALE BAR - 1:10

ARCHITECT
DesignInc | Lacoste + Stevenson | bmc2
architects in association
DesignInc Sydney PTY LIMITED ACN 003008820
L12 / 77 PACIFIC HWY NORTH SYDNEY NSW 2060 AUSTRALIA
PO BOX 651 NORTH SYDNEY NSW 2059 AUSTRALIA
T +612 8905 7100 F +612 8905 7199
www.designinc.com.au E sydney@sydney.designinc.com.au
Architecture Urban Design Interiors

CLIENT

PROJECT
LINDFIELD LEARNING VILLAGE
Eton Road,
Lindfield NSW 2070

TITLE
TYPICAL PLANTING DETAILS AND SCHEDULES

DRAWN BY	IC
SCALES	AS SHOWN @ A1
PLOT DATE	01/09/2017
PROJECT Nº.	S151441
DRAWING Nº.	LA-5110
REVISION	C

DRAWING STATUS	REVIEWED BY	SIGNATURE	DATE
TENDER	MR		

QUALITY CERTIFIED ISO 9001 Completion of the Drawing Status is evidence the design has been verified as conforming to the requirements of the Project M.S. Plan. Initialling the 'Drawn By' box confirms that this drawing has been prepared in conformity with DesignInc Sydney M.S. procedures.

DEVELOPMENT APPLICATION