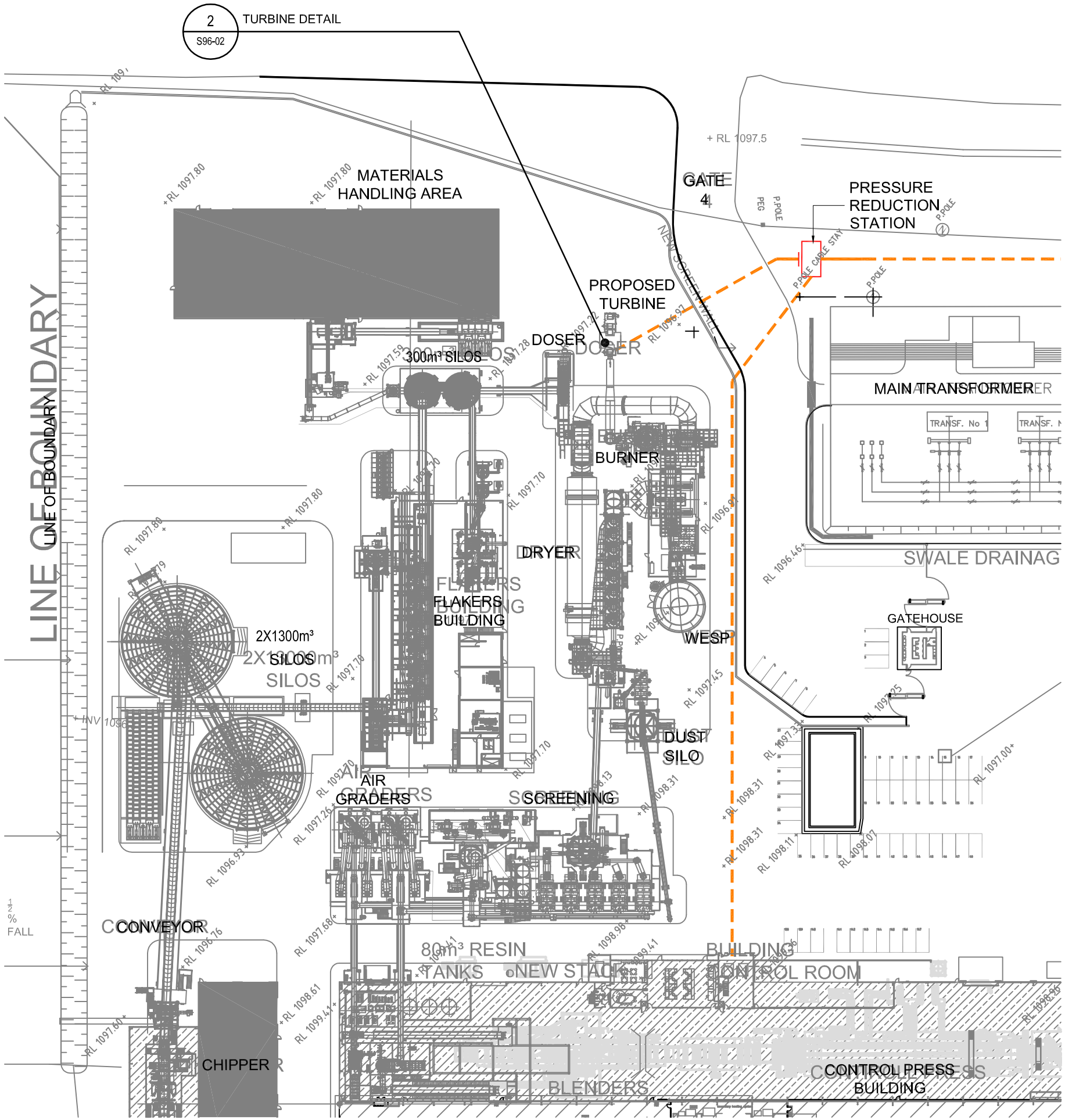

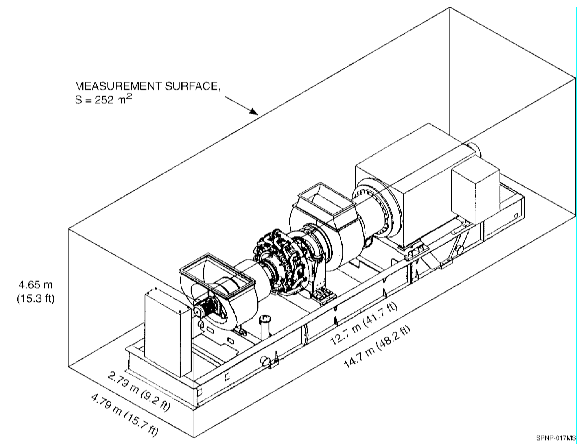

2 TURBINE DETAIL
SCALE: NTS

Issue	Description	Date	Drawn	Auth
C	SECTION 96 MODIFICATION	13/08/19	JG/DC	VB
B	SECTION 96 MODIFICATION	25/06/19	JG/DC	VB
A	SECTION 96 MODIFICATION	25/01/19	JG	VB

BORG CONSTRUCTION

OFFICE:
2 WELLA WAY SOMERSBY, N.S.W. 2250 AUSTRALIA
Tel: 02 4340 9800 Fax: 02 4340 8293

COPYRIGHT:
THIS DRAWING AND THE INFORMATION CONTAINED ARE THE PROPERTY OF THE COPYRIGHT OWNER 'BORG CONSTRUCTIONS Pty. Ltd.' AND MAY NOT BE COPIED OR REPRODUCED WITHOUT WRITTEN PERMISSION

Project
PROPOSED S96 MODIFICATION BORG PANELS TIMBER MANUFACTURING FACILITY

Location
124 LOWES MOUNT ROAD, OBERON
NEW SOUTH WALES

Drawing
NEW TURBINE + GAS INFRASTRUCTURE

Scale	Stage
1:500 @ A1 OR 1:1000 @ A3	S96

Project Number	Drawing Number	Issue
19	S96 03	A