DO NOT SCALE

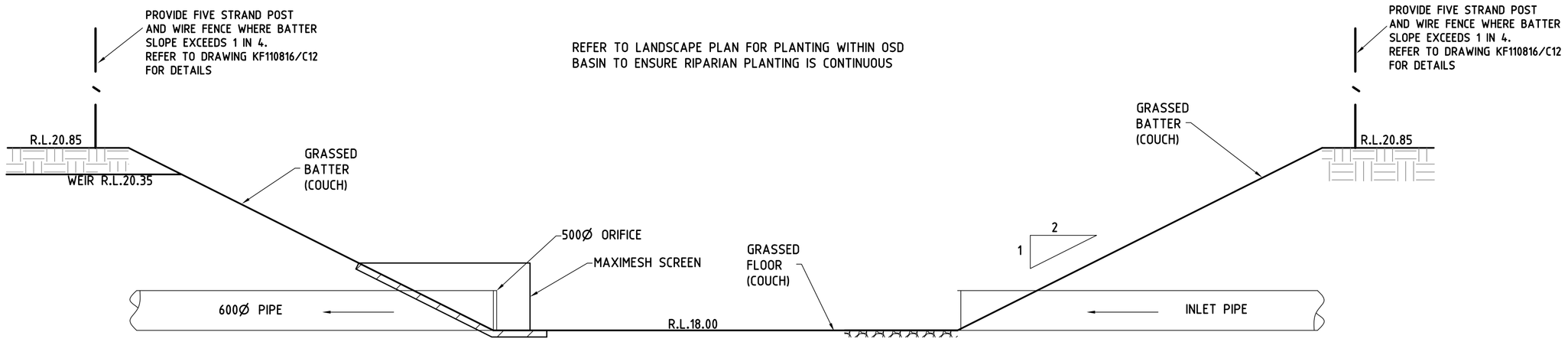

SECTION 1-1 THROUGH OSD BASIN B
SCALE 1:50

OSD BASIN B DETAILS
VOLUME @ MWL = 235m³
Q_5 = 0.41 m³/s
Q_{10} = 0.51 m³/s
Q_{100} = 0.77 m³/s

NOTE: FIX TO HEADWALL WITH M10 CHEMSET ANCHORS

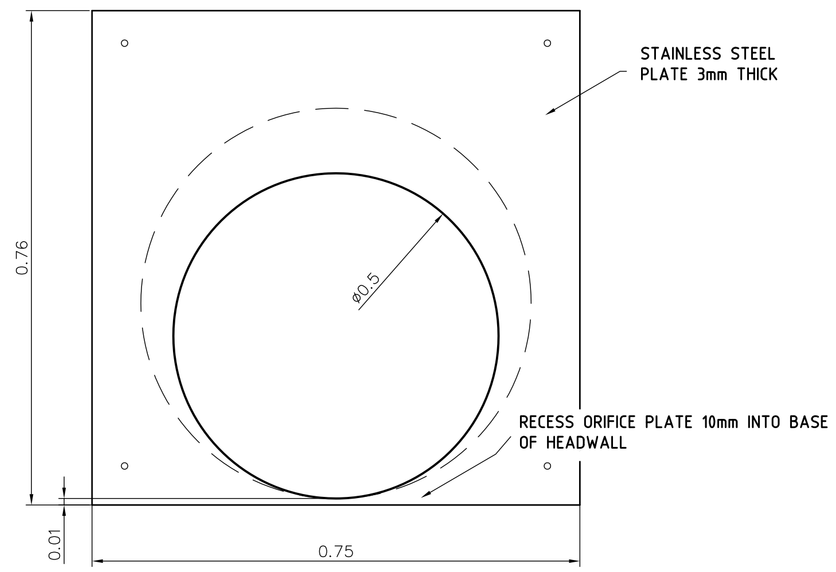

ORIFICE PLATE DETAIL
NTS

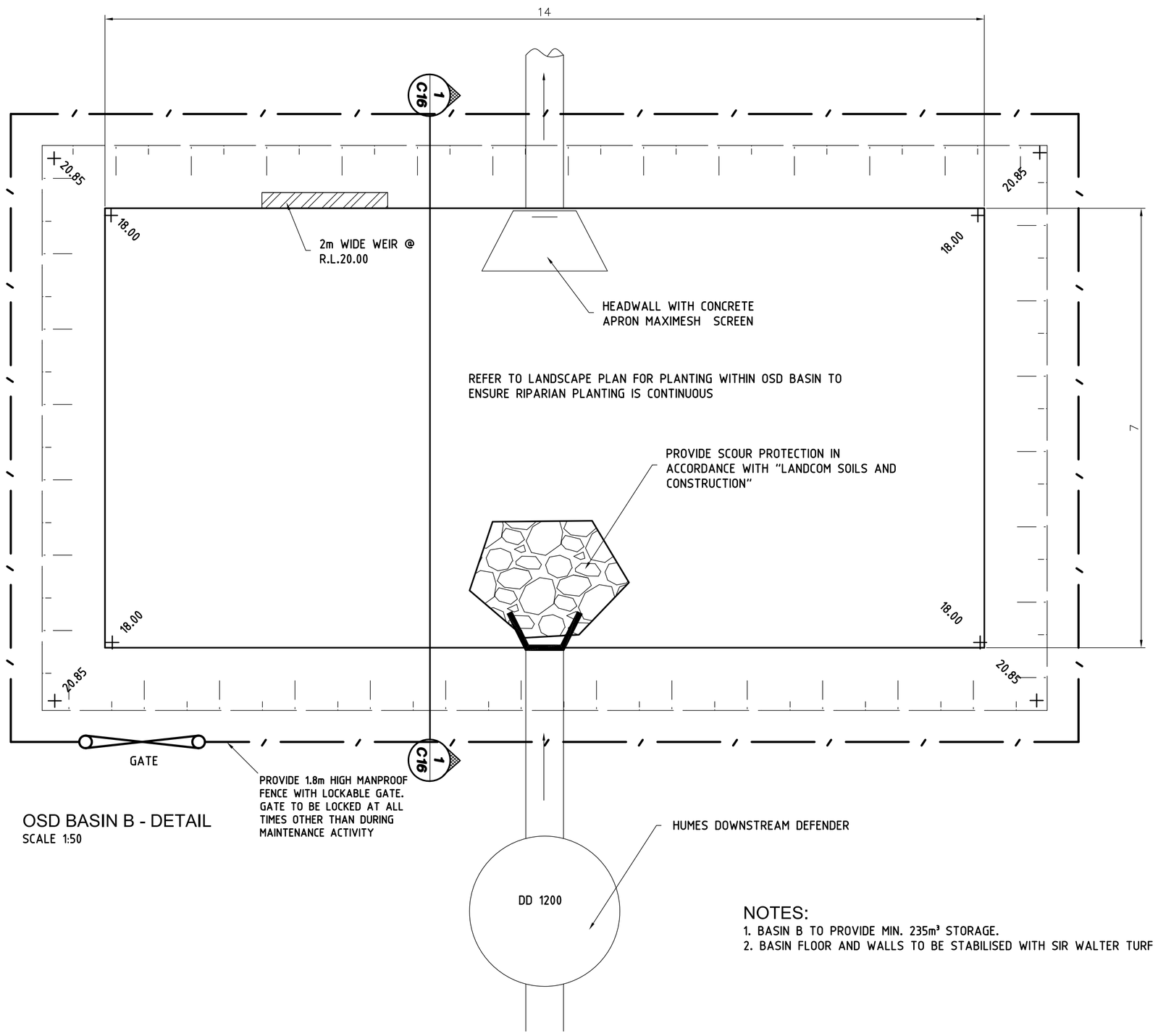

OSD BASIN B - DETAIL
SCALE 1:50

NOTES:
1. BASIN B TO PROVIDE MIN. 235m³ STORAGE.
2. BASIN FLOOR AND WALLS TO BE STABILISED WITH SIR WALTER TURF

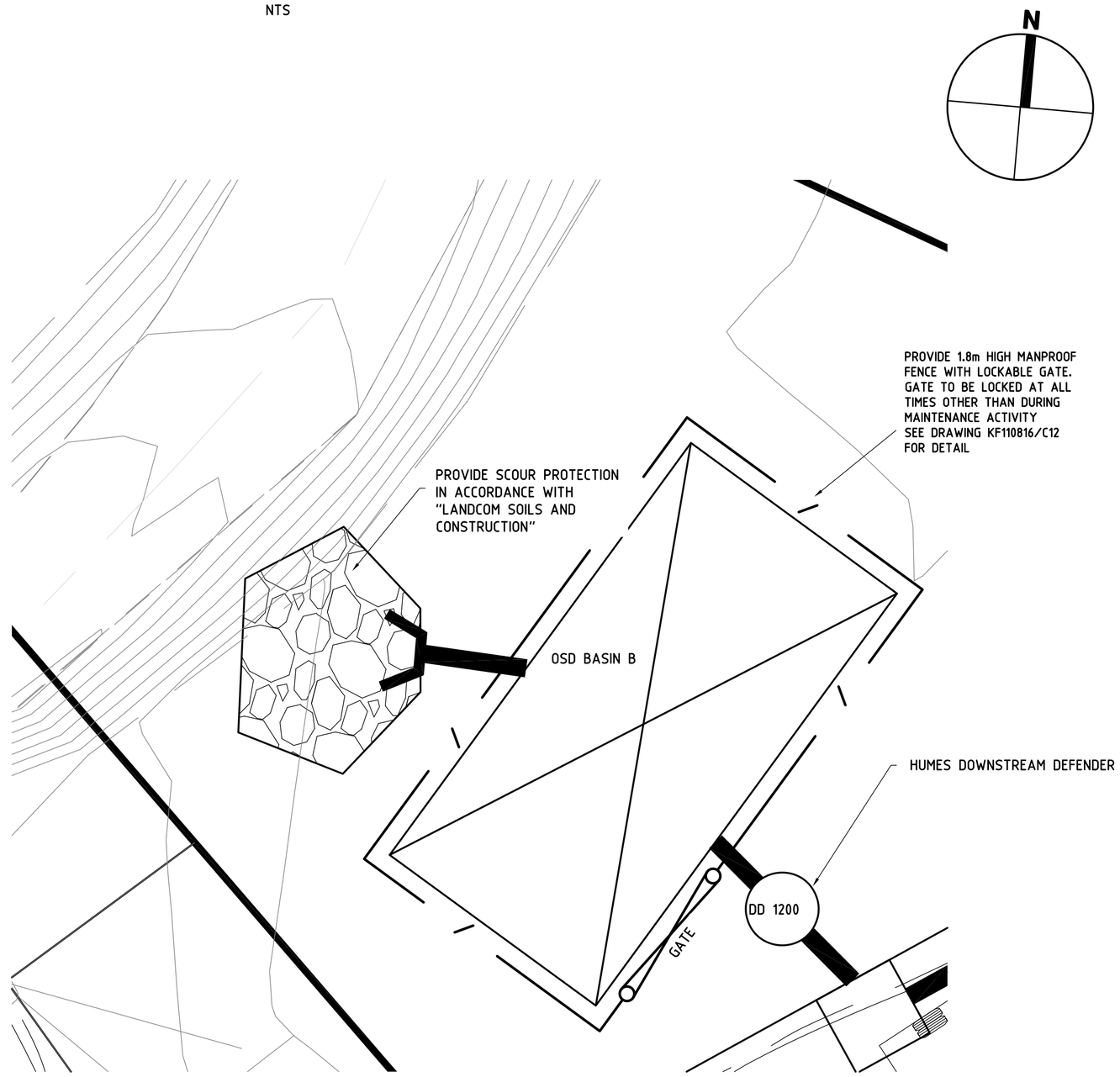

OSD BASIN B - PLAN
SCALE 1:100

Revision	Amendment or reason for issue	Issue date	Drawn by	Authorised
B	FENCE AND LOCKABLE GATE ADDED	10-06-2014	A.P.	W.M.
A	FENCE ADDED	20-03-2014	A.P	W.M

KFW INFRASTRUCTURE PROFESSIONALS
K.F. Williams & Associates Pty Ltd
28 Auburn Street
Wollongong NSW 2500
A.C.N 008 664 417
Project Management, Surveying, Civil, Structural, Water & Sewer
p (02) 4228 7044
f (02) 4226 2004
e mail@kfw.net.au
www.kfw.net.au

Surveyor DENNIS SMITH	Date JULY 2013	Drawing Title	PROPOSED INDUSTRIAL DEVELOPMENT LOT 10 DP 878167 WYLLIE ROAD, KEMBLA GRANGE OSD BASIN B
Date of Survey	Drawn B.PURNELL		
Height Datum AHD	Designed W.MULLANY		
Origin	Checked		
Horiz. Datum	Approved	Scale @ A1 @ A3	Drawing Status ISSUED FOR DA APPROVAL

Project No.	
KF110816	
Drawing No. C16	
Sheet 7 Of 17	Revision B

FILENAME: X:\KF110816\Civil\Drawings\DA\KF110816 DA.dwg
PLOTTED BY : aproudlove