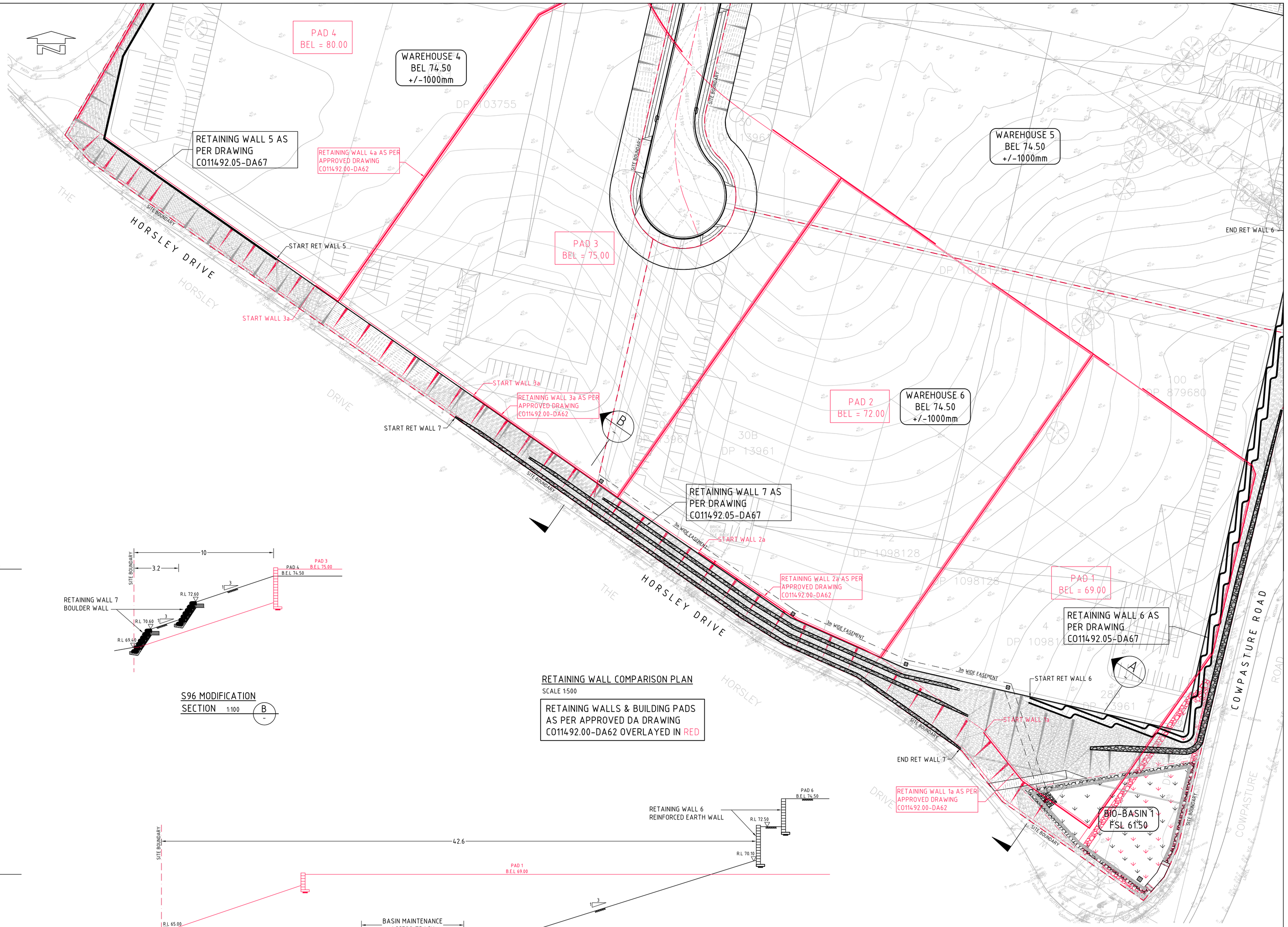

RETAINING WALL COMPARISON PLAN
SCALE 1:500

RETAINING WALLS & BUILDING PADS AS PER APPROVED DA DRAWING CO11492.00-DA62 OVERLAYED IN RED

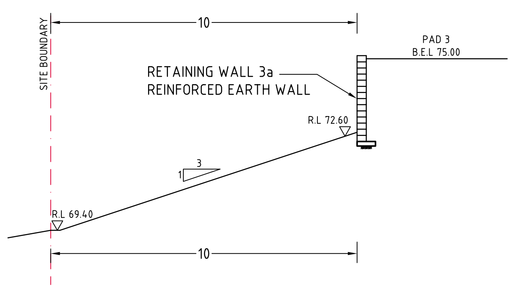

DA APPROVED
SECTION 1:100 B -

S96 MODIFICATION
SECTION 1:100 B -

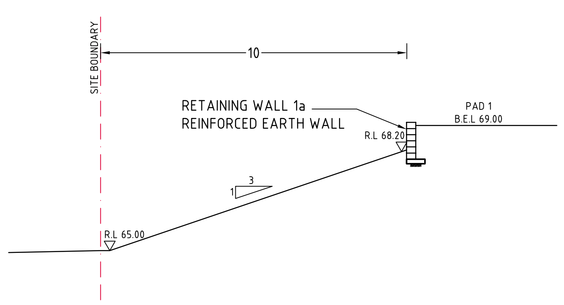

DA APPROVED
SECTION 1:100 A -

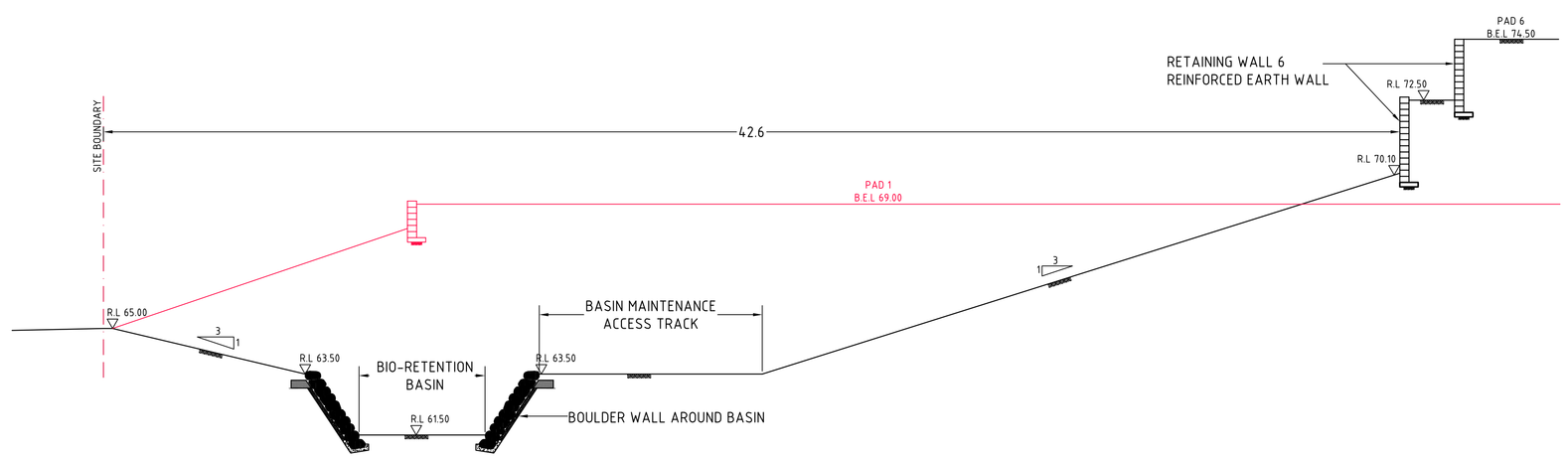

S96 MODIFICATION
SECTION 1:100 A -

1m 0 1 2 3 4 5 6 7 8 9 10m
SCALE 1:100 AT A0 SIZE PLOT

5m 0 10 20 30 40 50m
SCALE 1:500 AT A0 SIZE PLOT

FOR INFORMATION ONLY

AMENDMENTS	DATE	ISSUE
FOR INFORMATION ONLY	20.03.15	A

CLIENT: australand — COMMERCIAL & INDUSTRIAL DIVISION, L1 WESTFIELD TOWER, PARRAMATTA PLAZA, 159-161 CHURCH STREET, PARRAMATTA NSW 2150, PO BOX 3070, PARRAMATTA NSW 2150. PHONE: (02) 9767 5000, FAX: (02) 9767 5200

PROJECT: HORSLEY DV. BUSINESS PARK
CNR THE HORSELY DV. & COWPASTURE RD
WETHERILL PARK, NSW

DESIGNED	DRAWN	DATE	CHECKED	SIZE	SCALE	CAD REF.
M.M	M.C	11.11.14		A0	AS SHOWN	Co11492.05-DA69

Costin Roe Consulting Pty Ltd.
Consulting Engineers ACN 003 696 448
Level 1, 8 Windmill Street
Walsh Bay, Sydney NSW 2000
Tel: (02) 9251-7699 Fax: (02) 9241-3731
email: mail@costinroe.com.au

CostinRoe Consulting
Value in Engineering and Management

DRAWING TITLE: RETAINING WALL COMPARISON PLAN AND SECTIONS

DRAWING No: Co11492.05-DA69 ISSUE: A