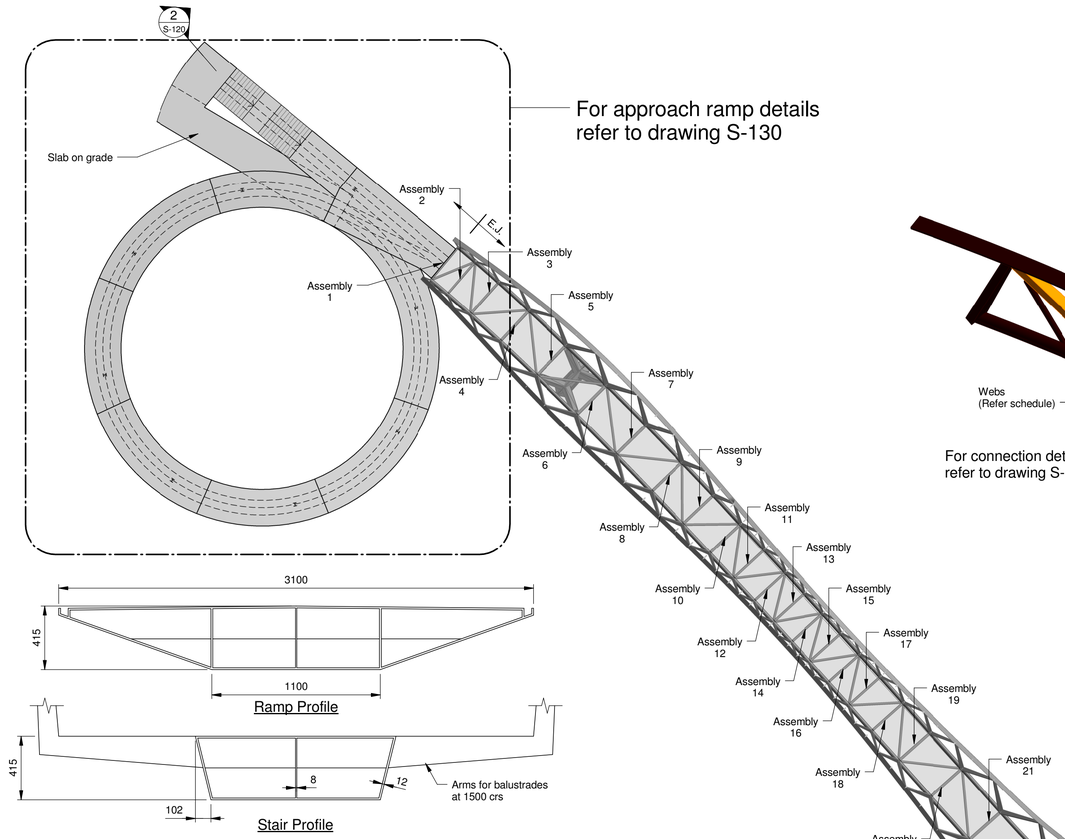

Box Beam Cross Sections

Scale: 1 : 20

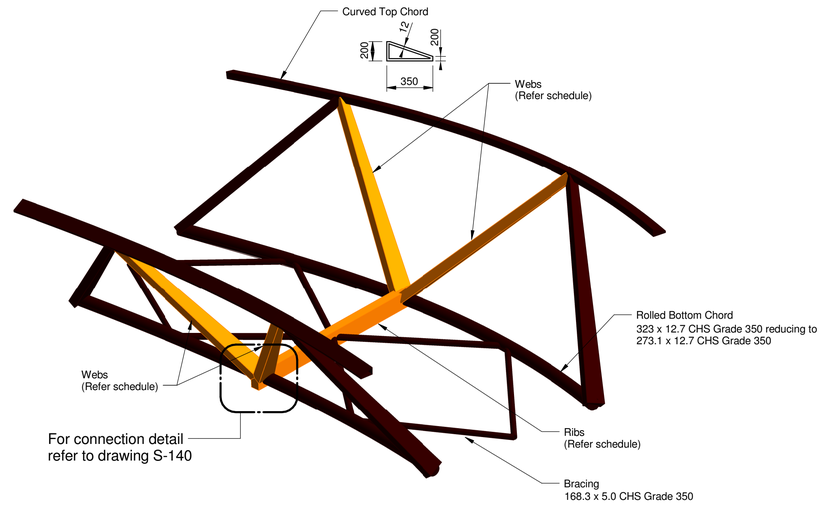

Typical Assembly

(1 complete assembly shown in orange)

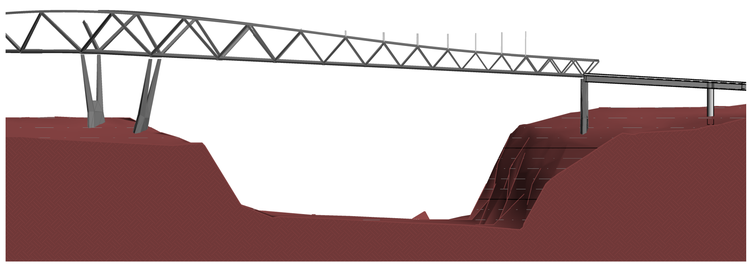

Elevation 1

Scale: 1 : 300

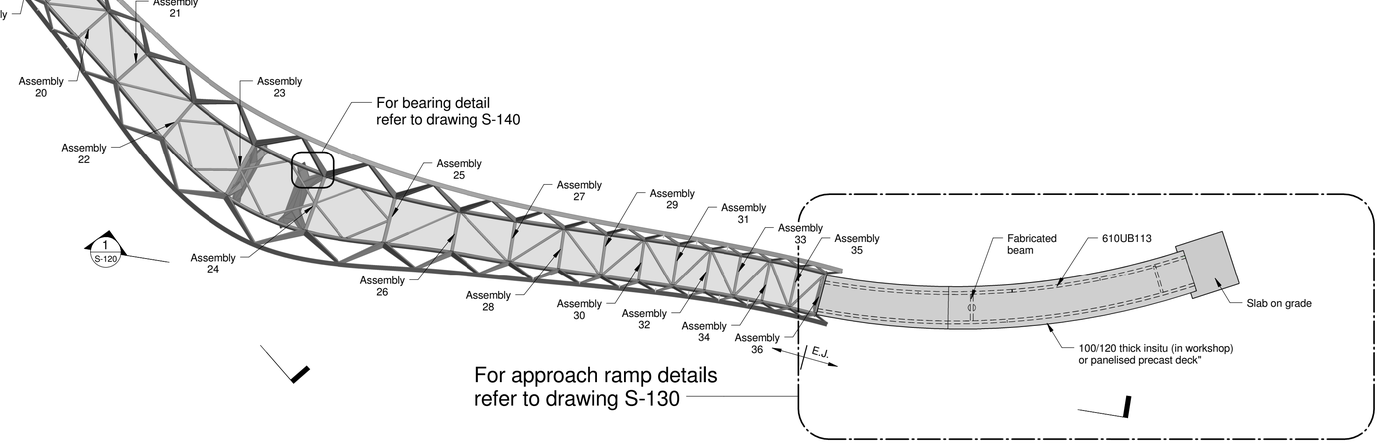

Truss Rib and Web member Schedule									
Assembly Number	Ribs				Webs				
	Depth (mm)	Width (mm)	Flange Thickness (mm)	Web Thickness (mm)	Depth at Base (mm)	Depth at Top (mm)	Width (mm)	Flange Thickness (mm)	Web Thickness (mm)
1	225	150	12	6	100	75	50	10	6
2	250	150	12	6	140	100	75	10	6
3	275	175	12	6	200	100	100	10	6
4	300	200	12	6	260	125	125	10	6
5	375	225	20	10	320	150	150	16	10
6	375	225	20	10	360	150	175	16	10
7	375	225	12	6	350	150	175	10	6
8	350	200	12	6	330	150	175	10	6
9	325	200	12	6	290	125	150	10	6
10	300	200	12	6	250	125	125	10	6
11	300	175	12	6	220	100	100	10	6
12	275	175	12	6	200	100	100	10	6
13	275	175	12	6	180	100	100	10	6
14	250	175	12	6	170	100	75	10	6
15	250	175	12	6	170	100	75	10	6
16	275	175	12	6	180	100	100	10	6
17	275	175	12	6	190	100	100	10	6
18	300	175	12	6	220	100	100	10	6
19	300	200	12	6	260	125	125	10	6
20	325	200	12	8	300	150	150	10	6
21	375	225	16	10	370	150	175	12	8
22	400	225	24	12	420	175	200	16	10
23	450	250	32	16	480	200	250	24	12
24	450	250	32	16	500	200	250	24	12
25	425	250	24	12	470	200	225	16	10
26	400	225	16	10	420	175	200	12	8
27	375	225	12	6	360	150	175	10	6
28	350	200	12	6	310	150	150	10	6
29	325	200	12	6	270	125	125	10	6
30	300	175	12	6	240	125	125	10	6
31	300	175	12	6	220	125	100	10	6
32	275	175	12	6	200	100	100	10	6
33	275	175	12	6	190	100	100	10	6
34	275	175	12	6	190	100	100	10	6
35	275	175	12	6	180	100	100	10	6
36	275	175	12	6	180	100	100	10	6

All steel to be grade 300 U.N.O

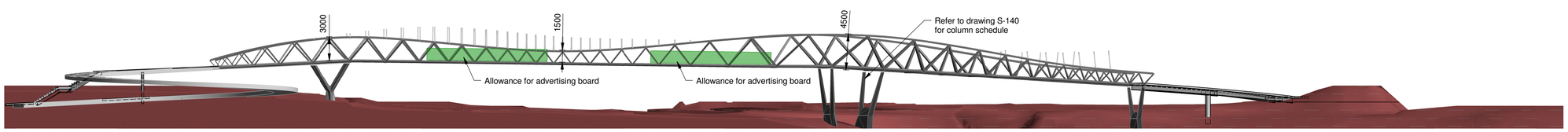

Elevation 2

Scale: 1 : 300

P2	16/05/14	ML	XN	AJ
Concept Design				
P1	09/05/14	JM	XN	AJ
Preliminary				
Issue	Date	By	Chkd	Appd

Level 3 Studio 3, 56 Bowman Street
Pyrmont NSW 2009 Australia
Tel : (02) 9571 7900
Fax: (02) 9571 7600

Client
Level 14, 60 Station Street
Paramatta
NSW 2150
Tel : (02) 9841 8600
Fax: (02) 9841 8688

Level 4 10-12 Clarke Street
Crows Nest
NSW 2065
Tel : (02) 9906 8611
Fax: (02) 9906 7318

Arup, Level 10, 201 Kent St
Sydney, NSW, 2000
Tel +61(02)9320 9320
Fax +61(02)9320 9321
www.arup.com.au

Job Title
North Ryde Pedestrian Bridge

General Arrangement
& Elevations

Scale at A1	As indicated
Discipline	Structural
Job No	234008
Drawing Status	Concept
Drawing No	S-120
Issue	P2

16/05/2014 6:21:17 PM

Do not scale

© Arup