KINCOPPAL ROSE BAY SCHOOL
NEW SOUTH HEAD ROAD, ROSE BAY NSW
CIVIL ENGINEERING WORKS

GENERAL NOTES:

1. ALL WORK TO BE CARRIED OUT IN ACCORDANCE WITH WOOLLAHRA MUNICIPAL COUNCIL'S SPECIFICATION. CONTRACTOR TO OBTAIN AND RETAIN A COPY ON SITE DURING THE COURSE OF THE WORKS.
2. ALL NEW WORKS ARE TO MAKE A SMOOTH JUNCTION WITH EXISTING CONDITIONS AND MARRY IN A 'WORKMANLIKE' MANNER.
3. THE CONTRACTOR IS TO VERIFY THE LOCATION OF ALL SERVICES WITH EACH RELEVANT AUTHORITY. ANY DAMAGE TO SERVICES SHALL BE RECTIFIED BY THE CONTRACTOR OR THE RELEVANT AUTHORITY AT THE CONTRACTOR'S EXPENSE. SERVICES SHOWN ON THESE PLANS ARE ONLY THOSE EVIDENT AT THE TIME OF SURVEY OR AS DETERMINED FROM SERVICE DIAGRAMS. H & H CONSULTING ENGINEERS PTY. LTD CANNOT GUARANTEE THE INFORMATION SHOWN NOR ACCEPT ANY RESPONSIBILITY FOR INACCURACIES OR INCOMPLETE DATA.
4. SERVICES & ACCESSES TO THE EXISTING PROPERTIES ARE TO BE MAINTAINED IN WORKING ORDER AT ALL TIMES DURING CONSTRUCTION.
5. ADJUST EXISTING SERVICE COVERS TO SUIT NEW FINISHED LEVELS TO RELEVANT AUTHORITY REQUIREMENTS WHERE NECESSARY.
6. REINSTATE AND STABILISE ALL DISTURBED LANDSCAPED AREAS.
7. MINIMUM GRADE OF SUBSOIL SHALL BE 0.5% (1:200) FALL TO OUTLETS.
8. ALL TEMPORARY SEDIMENT AND EROSION CONTROL DEVICES ARE TO BE CONSTRUCTED, PLACED AND MAINTAINED IN ACCORDANCE WITH THE TECHNICAL SPECIFICATIONS, EROSION AND SEDIMENTATION CONTROL PLAN AND WOOLLAHRA MUNICIPAL COUNCIL'S REQUIREMENTS WHERE APPLICABLE.
9. CONTRACTOR TO CHECK AND CONFIRM SITE DRAINAGE CONNECTIONS ACROSS THE VERGE PRIOR TO COMMENCEMENT OF SITE DRAINAGE WORKS.
10. PROPERTIES AFFECTED BY THE WORKS ARE TO BE NOTIFIED IN ADVANCE WHERE DISRUPTION TO EXISTING ACCESS IS LIKELY.

LOCALITY SKETCH

SCALE: NTS

DRAWING SCHEDULE	
19949_DA_C000	COVER SHEET, DRAWING SCHEDULE, NOTES AND LOCALITY SKETCH
19949_DA_C100	OVERALL SITE PLAN
19949_DA_C101	SENIOR SCHOOL - INTERNAL ROADWAY DESIGN PLAN - GROUND LEVEL
19949_DA_C102	SENIOR SCHOOL - INTERNAL ROADWAY DESIGN PLAN - BASEMENT LEVEL
19949_DA_C110	JUNIOR SCHOOL - INTERNAL ROADWAY DESIGN PLAN
19949_DA_C120	LOWER GROUND FLOOR TYPICAL SECTIONS
19949_DA_C200	STORMWATER MISCELLANEOUS DETAILS AND PIT LID SCHEDULE
19949_DA_C201	OSD TANK PLAN AND DETAILS
19949_DA_C250	SENIOR SCHOOL - STORMWATER CATCHMENT PLAN - PRE AND POST DEVELOPMENT
19949_DA_C251	JUNIOR SCHOOL - STORMWATER CATCHMENT PLAN - PRE AND POST DEVELOPMENT
19949_DA_SE01	SENIOR SCHOOL - SEDIMENT AND EROSION CONTROL PLAN
19949_DA_SE02	JUNIOR SCHOOL - SEDIMENT AND EROSION CONTROL PLAN
19949_DA_SE03	SEDIMENT AND EROSION CONTROL DETAILS

EXISTING SERVICES & FEATURES

- THE CONTRACTOR SHALL ALLOW FOR THE CAPPING OFF, EXCAVATION AND REMOVAL (IF REQUIRED) OF ALL EXISTING SERVICES IN AREAS AFFECTED BY WORKS WITHIN THE CONTRACT AREA OR AS SHOWN ON THE DRAWINGS UNLESS DIRECTED OTHERWISE BY THE SUPERINTENDENT.
- THE CONTRACTOR SHALL ENSURE THAT AT ALL TIMES SERVICES TO ALL BUILDINGS NOT AFFECTED BY THE WORKS ARE NOT DISRUPTED.
- PRIOR TO COMMENCEMENT OF ANY WORKS THE CONTRACTOR SHALL GAIN APPROVAL OF HIS PROGRAM FOR THE RELOCATION/ CONSTRUCTION OF TEMPORARY SERVICES.
- CONTRACTOR SHALL CONSTRUCT TEMPORARY SERVICES TO MAINTAIN SUPPLY TO EXISTING BUILDING REMAINING IN OPERATION DURING WORKS TO THE SATISFACTION AND APPROVAL OF THE SUPERINTENDENT. ONCE DIVERSION IS COMPLETE AND COMMISSIONED, THE CONTRACTOR SHALL REMOVE ALL SUCH TEMPORARY SERVICES AND MAKE GOOD TO THE SATISFACTION OF THE SUPERINTENDENT.
- INTERRUPTION TO SUPPLY OF EXISTING SERVICES SHALL BE DONE SO AS NOT TO CAUSE ANY INCONVENIENCE TO THE PRINCIPAL. CONTRACTOR TO GAIN APPROVAL FROM THE SUPERINTENDENT FOR TIME OF INTERRUPTION.
- EXISTING SERVICES, BUILDINGS, EXTERNAL STRUCTURES AND TREES SHOWN ON THESE DRAWINGS ARE EXISTING FEATURES PRIOR TO ANY DEMOLITION WORKS.
- EXISTING SERVICES UNLESS SHOWN ON SURVEY PLAN HAVE BEEN PLOTTED FROM SERVICES SEARCH PLANS AND AS SUCH THEIR ACCURACY CANNOT BE GUARANTEED. IT IS THE RESPONSIBILITY OF THE CONTRACTOR TO COMPLETE A 'DIAL BEFORE YOU DIG' SEARCH AND TO ESTABLISH THE LOCATION AND LEVEL OF ALL EXISTING SERVICES PRIOR TO THE COMMENCEMENT OF ANY WORK. ANY DISCREPANCIES SHALL BE REPORTED TO THE SUPERINTENDENT. CLEARANCES SHALL BE OBTAINED FROM THE RELEVANT SERVICE AUTHORITY.
- ALL BRANCH GAS AND WATER SERVICES UNDER DRIVEWAYS AND BRICK PAVING SHALL BE LOCATED IN Ø80 uPVC SEWER GRADE CONDUITS EXTENDING A MINIMUM OF 500mm BEYOND EDGE OF PAVING.

FOR INFORMATION ONLY

SURVEY INFORMATION
SURVEYED BY:
CRUX SURVEYING AUSTRALIA
DATUM: AHD
ORIGIN OF LEVELS: SSM 99001, RL 53.939 (AHD)

REVISION	AMENDMENT	DRAWN	DESIGNED	DATE	REVISION	AMENDMENT	DRAWN	DESIGNED	DATE
01	ISSUED FOR INFORMATION ONLY	KR	AF	07.04.2020					

Client
KINCOPPAL ROSE BAY SCHOOL

Architect
BVN Architects

This drawing and design remains the property of Henry & Hymas and may not be copied in whole or in part without the prior written approval of Henry & Hymas.

Level 5,
79 Victoria Avenue
Chatswood NSW 2067

Telephone +61 2 9417 8400
Facsimile +61 2 9417 8337
Email email@hhconsult.com.au
Web www.henryandhymas.com.au

henry&hymas

Project
KINCOPPAL ROSE BAY SCHOOL
NEW SOUTH HEAD ROAD, ROSE BAY, NSW

Title
COVER SHEET, DRAWING SCHEDULE, NOTES AND LOCALITY SKETCH

Drawn	Designed	Date
J.Knight	I.Ahmed	JAN 2020
Checked	Approved	Scale @A1
A.Francis	A.Francis	1:100

Drawing number: 19949_DA_C000
Revision: 01

0 10 20 30 40 50m

10 8 6 4 2

SCALE 1:500

OVERALL SITE PLAN

SCALE: 1:500

FOR INFORMATION ONLY

SURVEY INFORMATION

SURVEYED BY:
CRUX SURVEYING AUSTRALIA
DATUM: AHD
ORIGIN OF LEVELS: SSM 99001, RL 53.939 (AHD)

REVISION	AMENDMENT	DRAWN	DESIGNED	DATE	REVISION	AMENDMENT	DRAWN	DESIGNED	DATE
01	ISSUED FOR INFORMATION ONLY	KR	AF	07.04.2020					

Client
KINCOPPAL ROSE BAY SCHOOL

Architect
BVN Architects

This drawing and design remains the property of Henry & Hymas and may not be copied in whole or in part without the prior written approval of Henry & Hymas.

Level 5,
79 Victoria Avenue
Chatswood NSW 2067

Telephone
+61 2 9417 8400
Facsimile
+61 2 9417 8337
Email
email@hhconsult.com.au
Web
www.henryandhymas.com.au

Global-Mark.com.au®

henry&hymas

Project
KINCOPPAL ROSE BAY SCHOOL
NEW SOUTH HEAD ROAD, ROSE BAY, NSW

Title
OVERALL SITE PLAN

Drawn	Designed	Date
J.Knight	I.Ahmed	JAN 2020
Checked	Approved	Scale @A1
A.Francis	A.Francis	1:500

Drawing number: 19949_DA_C100

Revision: 01

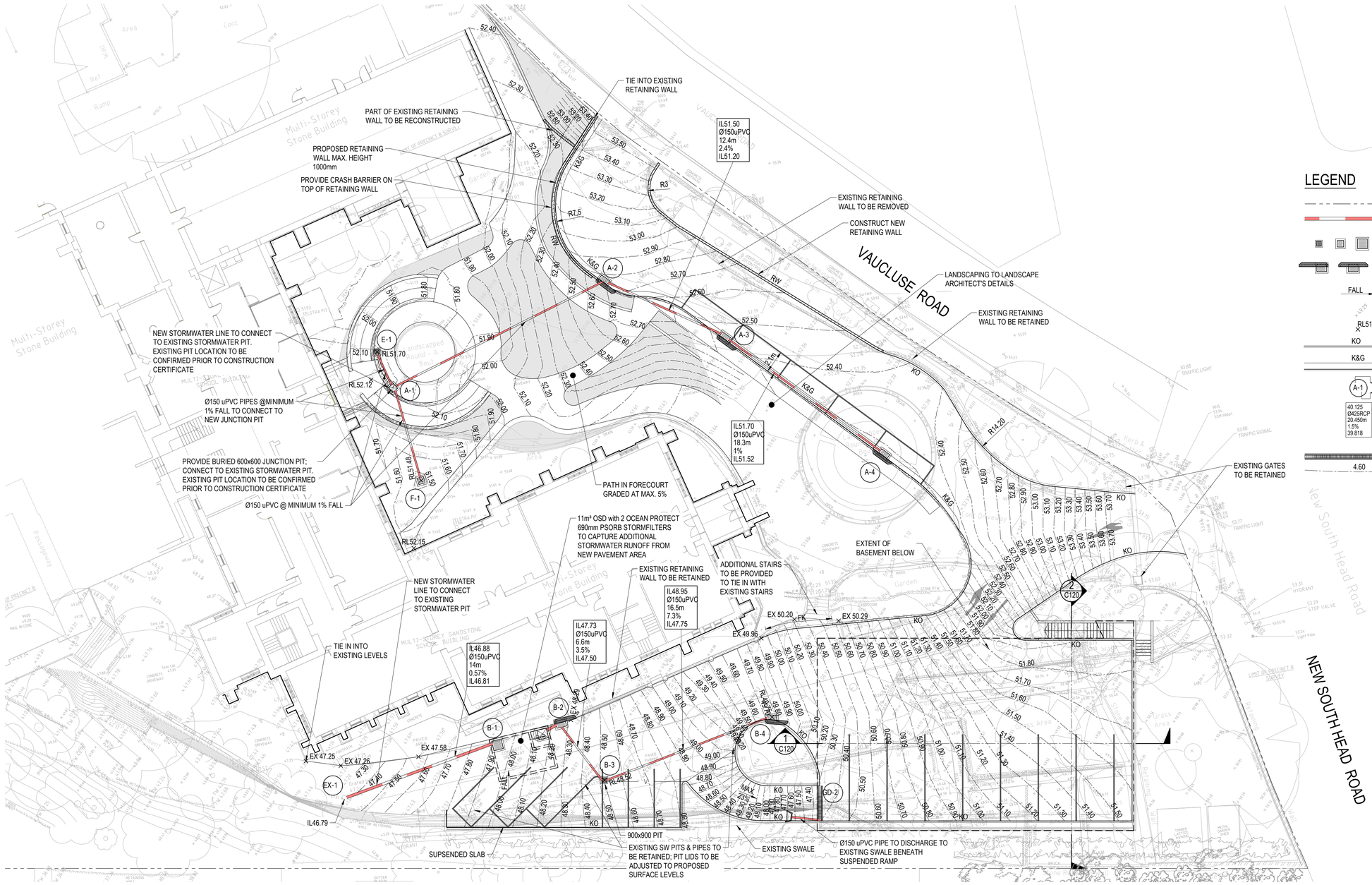

LEGEND

- PROPOSED BOUNDARY
- PROPOSED STORMWATER PIPE
- PROPOSED SURFACE INLET PITS
- PROPOSED LINTEL ONGRADE & SAG PITS
- FALL — DENOTES DIRECTION OF FALL
- EXISTING SPOT LEVEL
- RL51.34 — PROPOSED SPOT LEVEL
- KO — PROPOSED KERB ONLY
- K&G — PROPOSED KERB AND GUTTER
- A-1 — LINE LETTER / PIT NUMBER — PROPOSED PIT TAG
- 40.125 / 0/425RCP / 20.450m / 1.5% / 39.818 — STORMWATER UPSTREAM INVERT RL. / STORMWATER PIPE DIAMETER & CLASS / STORMWATER PIPE LENGTH / STORMWATER PIPE GRADE / STORMWATER DOWNSTREAM INVERT RL.
- PROPOSED GRATED DRAIN
- 4.60 — PROPOSED CONTOURS

SENIOR SCHOOL - INTERNAL ROADWAY DESIGN PLAN - GROUND LEVEL

SCALE: 1:200

0 4 8 12 16 20m
4 3 2 1
SCALE 1:200

FOR INFORMATION ONLY

SURVEY INFORMATION
SURVEYED BY:
CRUX SURVEYING AUSTRALIA
DATUM: AHD
ORIGIN OF LEVELS: SSM 99001, RL 53.939 (AHD)

REVISION	AMENDMENT	DRAWN	DESIGNED	DATE	REVISION	AMENDMENT	DRAWN	DESIGNED	DATE
01	ISSUED FOR INFORMATION ONLY	KR	AF	-					

Client
KINCOPPAL ROSE BAY SCHOOL

Architect
BVN Architects

This drawing and design remains the property of Henry & Hymas and may not be copied in whole or in part without the prior written approval of Henry & Hymas.

Level 5,
78 Victoria Avenue
Chatswood NSW 2067

Telephone +61 2 9417 8400
Facsimile +61 2 9417 8337
Email email@hhconsult.com.au
Web www.henryandhymas.com.au

henry&hymas

Project
KINCOPPAL ROSE BAY SCHOOL
NEW SOUTH HEAD ROAD, ROSE BAY, NSW

Title
SENIOR SCHOOL - INTERNAL ROADWAY DESIGN PLAN - GROUND LEVEL

Drawn	Designed	Date
J.Knight	I.Ahmed	JAN 2020
Checked	Approved	Scale @A1
A.Francis	A.Francis	1:200

Drawing number: 19949_DA_C101
Revision: 01

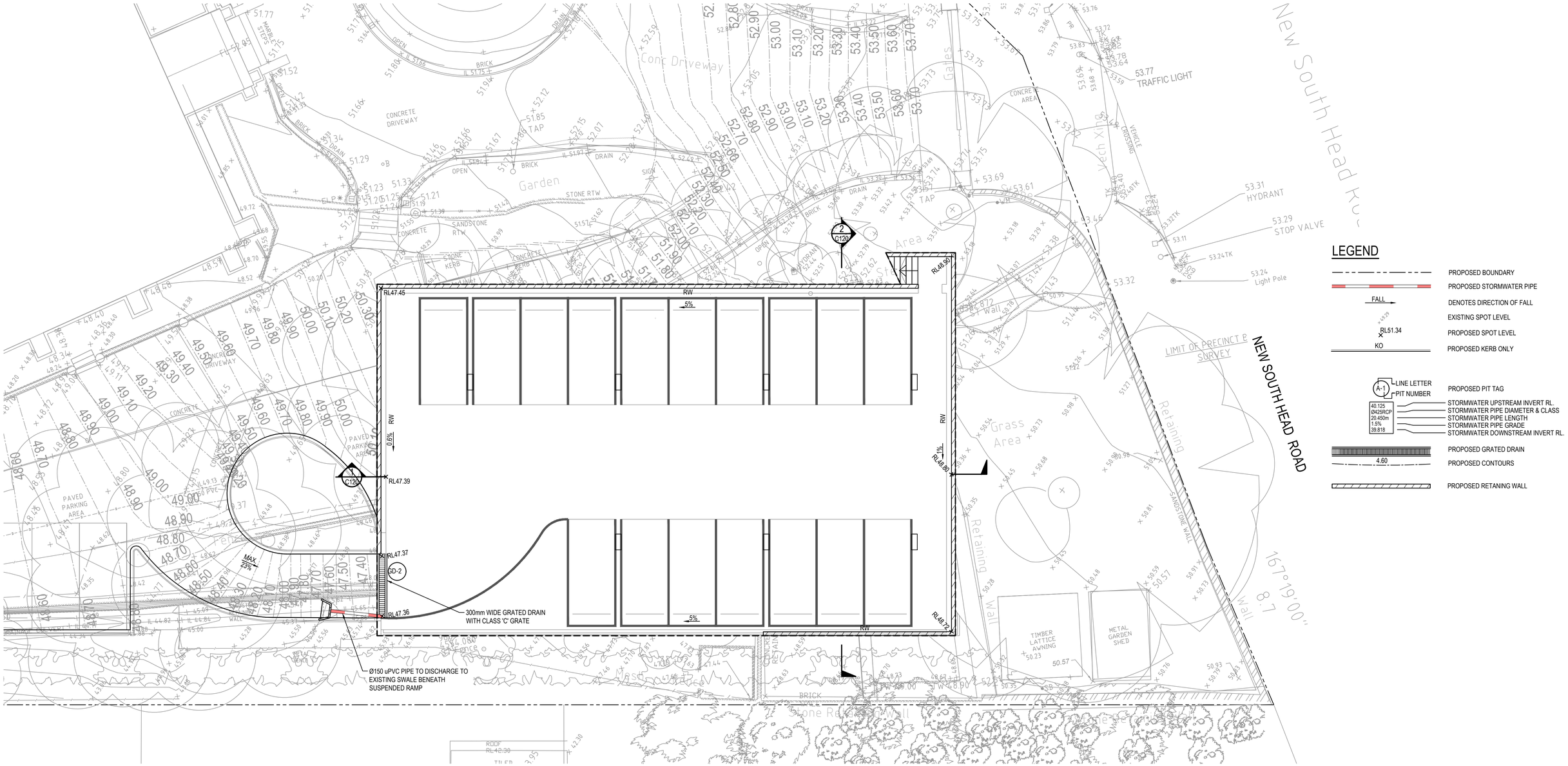

SENIOR SCHOOL - INTERNAL ROADWAY DESIGN PLAN - BASEMENT LEVEL

SCALE: 1:100

0 2 4 6 8 10m

2 1

SCALE 1:100

FOR INFORMATION ONLY

SURVEY INFORMATION
SURVEYED BY:
CRUX SURVEYING AUSTRALIA
DATUM: AHD
ORIGIN OF LEVELS: SSM 99001, RL 53.939 (AHD)

REVISION	AMENDMENT	DRAWN	DESIGNED	DATE	REVISION	AMENDMENT	DRAWN	DESIGNED	DATE
01	ISSUED FOR INFORMATION ONLY	KR	AF	-					

Client
KINCOPPAL ROSE BAY SCHOOL

Architect
BVN Architects

This drawing and design remains the property of Henry & Hymas and may not be copied in whole or in part without the prior written approval of Henry & Hymas.

Level 5,
79 Victoria Avenue
Chatswood NSW 2067

Telephone +61 2 9417 8400
Facsimile +61 2 9417 8337
Email email@hhconsult.com.au
Web www.henryandhymas.com.au

henry&hymas

Project
KINCOPPAL ROSE BAY SCHOOL
NEW SOUTH HEAD ROAD, ROSE BAY, NSW

Title
SENIOR SCHOOL - INTERNAL ROADWAY DESIGN PLAN - BASEMENT LEVEL

Drawn	Designed	Date
J.Knight	I.Ahmed	JAN 2020
Checked	Approved	Scale @A1
A.Francis	A.Francis	1:100

Drawing number: 19949_DA_C102

Revision: 01

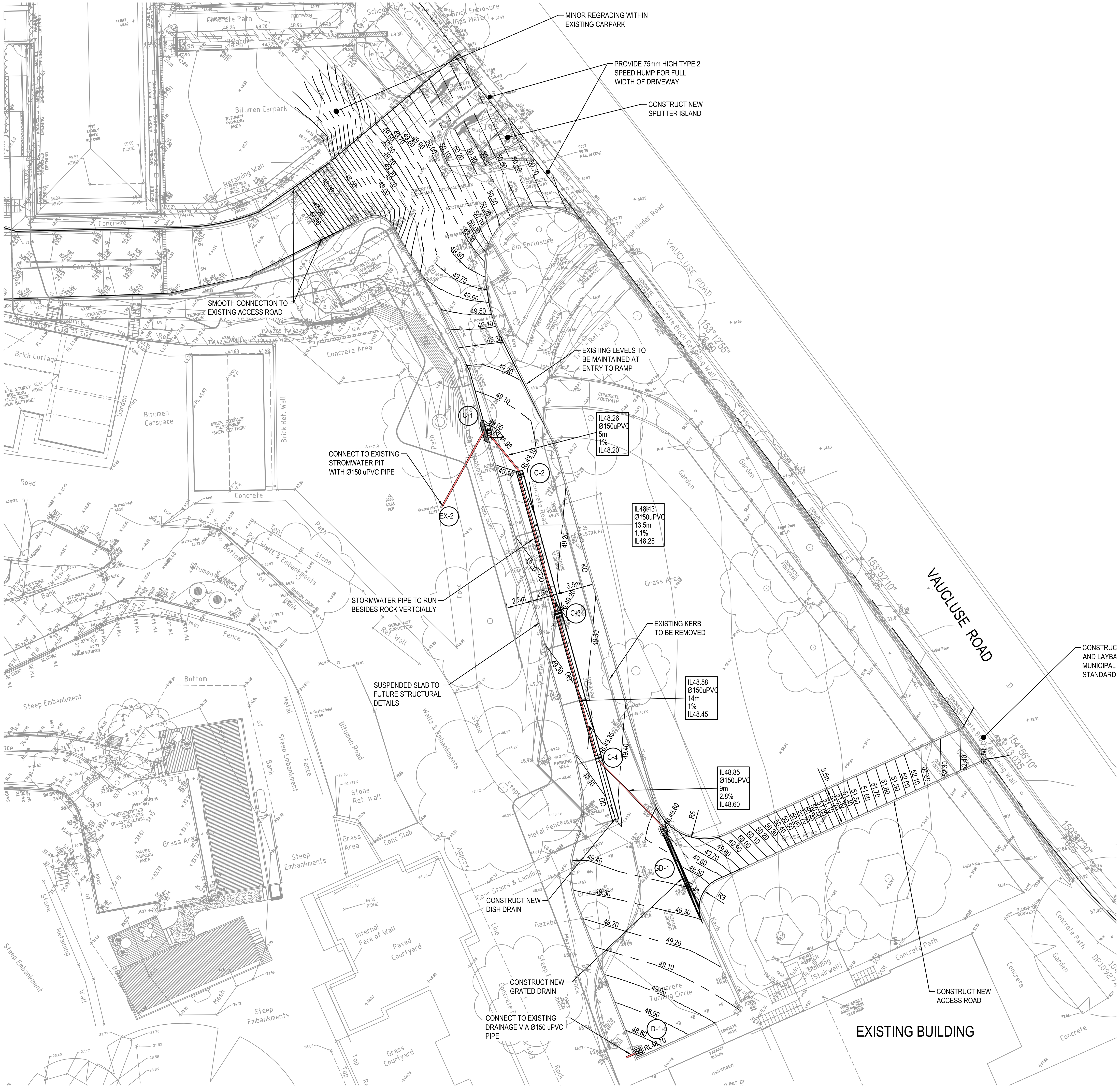

MINOR REGRADING WITHIN EXISTING CARPARK
PROVIDE 75mm HIGH TYPE 2 SPEED HUMP FOR FULL WIDTH OF DRIVEWAY
CONSTRUCT NEW SPLITTER ISLAND
SMOOTH CONNECTION TO EXISTING ACCESS ROAD
EXISTING LEVELS TO BE MAINTAINED AT ENTRY TO RAMP
IL48.26
Ø150uPVC
5m
1%
IL48.20
CONNECT TO EXISTING STROMWATER PIT WITH Ø150 uPVC PIPE
IL48.43
Ø150uPVC
13.5m
1.1%
IL48.28
STORMWATER PIPE TO RUN BESIDES ROCK VERTCIALLY
EXISTING KERB TO BE REMOVED
SUSPENDED SLAB TO FUTURE STRUCTURAL DETAILS
IL48.58
Ø150uPVC
14m
1%
IL48.45
IL48.85
Ø150uPVC
9m
2.8%
IL48.60
CONSTRUCT NEW DISH DRAIN
CONSTRUCT NEW GRATED DRAIN
CONNECT TO EXISTING DRAINAGE VIA Ø150 uPVC PIPE
CONSTRUCT NEW ACCESS ROAD
CONSTRUC AND LAYBA MUNICIPAL STANDARD
VAUCLUSE ROAD
EXISTING BUILDING
C-1
C-2
C-3
C-4
EX-2
GD-1
D-1

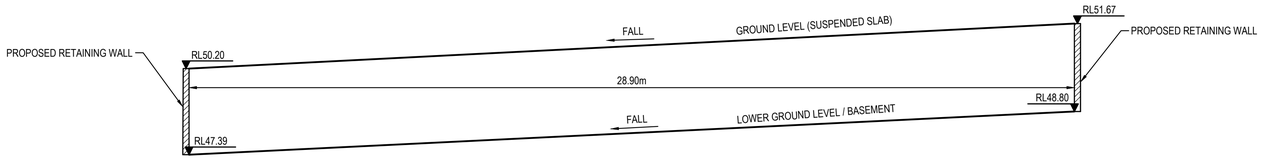

SECTION 1 C101
SCALE: 1:100

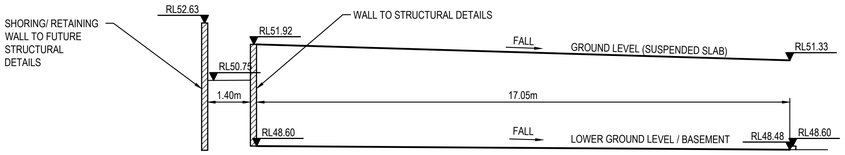

SECTION 2 C101
SCALE: 1:100

0 2 4 6 8 10m
2 1
SCALE 1:100

FOR INFORMATION ONLY

REVISION	AMENDMENT	DRAWN	DESIGNED	DATE	REVISION	AMENDMENT	DRAWN	DESIGNED	DATE
01	ISSUED FOR INFORMATION ONLY	KR	AF	07.04.2020					

Client
KINCOPPAL ROSE BAY SCHOOL

Architect
BVN Architects

This drawing and design remains the property of Henry & Hymas and may not be copied in whole or in part without the prior written approval of Henry & Hymas.

Level 5,
79 Victoria Avenue
Chatswood NSW 2067

Telephone
+61 2 9417 8400
Facsimile
+61 2 9417 8337
Email
email@hhconsult.com.au
Web
www.henryandhymas.com.au

henry&hymas

Project
KINCOPPAL ROSE BAY SCHOOL
NEW SOUTH HEAD ROAD, ROSE BAY, NSW

Title
LOWER GROUND FLOOR TYPICAL SECTIONS

Drawn	Designed	Date
J.Knight	A.Francis	SEPT 2019
Checked	Approved	Scale @A1
A.Francis	A.Francis	1:100

Drawing number: 19949_DA_C120
Revision: 01

TYPICAL PIT CHAMBER SIZES

IT IS THE CONTRACTORS RESPONSIBILITY TO SELECT PIT CHAMBER SIZE WITH REGARDS TO PIPE SIZE, DEPTH TO INVERT AND SKEW ANGLE. REFER SKETCHES BELOW.

1. SELECT PIT CHAMBER USING THE STEPS BELOW:
2. SELECT PIT CHAMBER SIZE DEPENDING ON THE PIPE DIAMETERS.
3. CHECK PIT CHAMBER SIZE TO SATISFY DEPTH TO INVERT REQUIREMENTS.
   CHECK PIT CHAMBER DIMENSIONS TO SATISFY THE SKEW ANGLE IN THE TABLE.

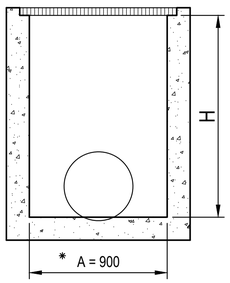

SECTION
NTS

*A = 600 FOR PIPES UP TO 375 DIA.

1 PIT CHAMBER DIMENSIONS FOR PIPES UP TO 600 DIA.

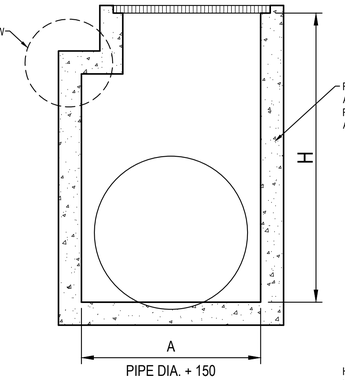

PIPE DIA. + 150
SECTION
NTS

1 PIT CHAMBER FOR PIPES GREATER THAN 600 DIA.

2 PIT SIZE & DEPTH REQUIREMENTS

H = 0-900mm - AxB = 600x600mm
H = 900-1200mm - AxB = 900x600mm
H = >1200mm - AxB = 900x900mm

FOR B = 600mm - MAX. SIDE ENTRY PIPE AT 45° SKEW = 225mm
FOR B = 900mm - MAX. SIDE ENTRY PIPE AT 45° SKEW = 375mm
FOR B = 1200mm - MAX. SIDE ENTRY PIPE AT 45° SKEW = 600mm
FOR B = 1500mm - MAX. SIDE ENTRY PIPE AT 45° SKEW = 825mm
FOR B = 1900mm - MAX. SIDE ENTRY PIPE AT 45° SKEW = 1050mm

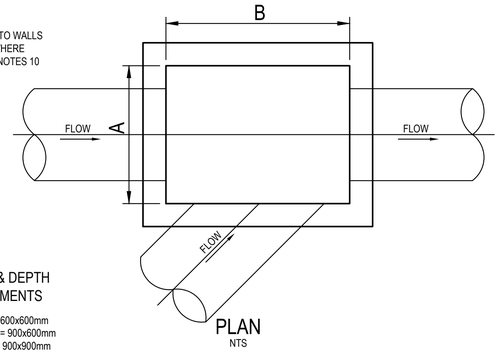

PLAN
NTS

3 PIT CHAMBER FOR SIDE ENTRY ON SKEW

TABLE 1	
SIEVE SIZE (MM)	WEIGHT PASISNG (%)
75.0	100
9.5	100 TO 50
2.36	100 TO 30
0.60	50 TO 15
0.075	25 TO 0

TABLE 2	
SIEVE SIZE (MM)	WEIGHT PASISNG (%)
19.0	100
2.36	100 TO 50
0.60	90 TO 20
0.30	60 TO 10
0.15	25 TO 0
0.075	10 TO 0

TABLE 3				
SUPPORT TYPE	BED ZONE X	HAUNCH ZONE Y	BED AND HAUNCH ZONES COMPACTION	MAX BEDDING FACTOR
HS1	100 IF D<=1500, OR 150 IF D>=1500	0.1D	50	2.0
HS2		0.3D	60	2.5
HS3		0.3D	70	4.0

PIT LID SCHEDULE

PIT/STRUCTURE NUMBER	DESCRIPTION
A-4 C-1	SAG KERB INLET PIT WITH 1.8m LINTEL AND MEDIUM DUTY GRATED LID CLASS "C" WITH OCEANGUARD IN ACCORDANCE WITH WOOLLAHRA MUNICIPAL COUNCIL REQUIREMENT
A-2 A-3 B-2 B-4	ON GRADE KERB INLET PIT WITH 1.8m LINTEL AND MEDIUM DUTY GRATED LID CLASS "C" WITH OCEANGUARD IN ACCORDANCE WITH WOOLLAHRA MUNICIPAL COUNCIL REQUIREMENT
C-2 C-3 C-4 D-1 F-1	SURFACE INLET PIT WITH HINGED 600x600 MEDIUM DUTY GRATED LID CLASS 'C' WITH OCEANGUARD IN ACCORDANCE WITH WOOLLAHRA MUNICIPAL COUNCIL'S REQUIREMENTS.
B-3 E-1	SURFACE INLET PIT WITH HINGED 450x450 MEDIUM DUTY GRATED LID CLASS 'C' WITH OCEANGUARD IN ACCORDANCE WITH WOOLLAHRA MUNICIPAL COUNCIL'S REQUIREMENTS.
A-1	JUNCTION PIT WITH 600x600 HINGED MEDIUM DUTY CONCRETE LID CLASS 'C' IN ACCORDANCE WITH WOOLLAHRA MUNICIPAL COUNCIL'S REQUIREMENTS.
B-1	OSD TANK ACCESS OPENING WITH 900x900 HINGED MEDIUM DUTY GRATED LID CLASS "C" WITH LOCK-DOWN SYSTEM IN ACCORDANCE WITH WOOLLAHRA MUNICIPAL COUNCIL'S REQUIREMENTS.
SD-1	200mm WIDE MEDIUM DUTY GRATED DRAIN AND MEDIUM DUTY FRAME CLASS "C" IN ACCORDANCE WITH WOOLLAHRA MUNICIPAL COUNCIL'S REQUIREMENTS.
SD-2	300mm WIDE MEDIUM DUTY GRATED DRAIN AND MEDIUM DUTY FRAME CLASS "C" IN ACCORDANCE WITH WOOLLAHRA MUNICIPAL COUNCIL'S REQUIREMENTS.
EX-1 EX-2	EXISTING PIT TO REMAIN.

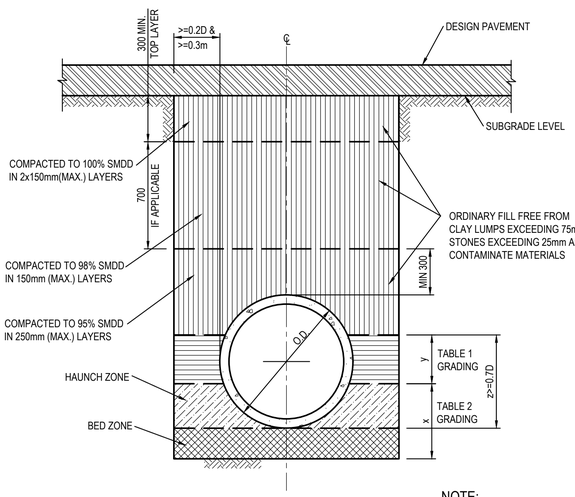

PIPE TRENCH INSTALLATION BENEATH PAVEMENT

(HS SUPPORT TO BE USED UNDER ROADWAY)
SCALE 1:20

NOTE:
TYPE HS2 TO BE USED AS A TYPICAL SUPPORT FOR TRENCHES UNDER ROADWAY UNLESS SPECIFIED SEPERATELY

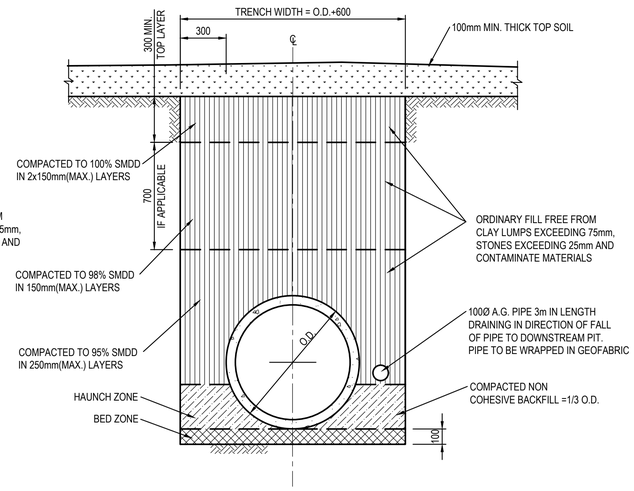

PIPE TRENCH INSTALLATION IN LANDSCAPE AREAS

(H1 & H2 SUPPORT)
SCALE 1:20

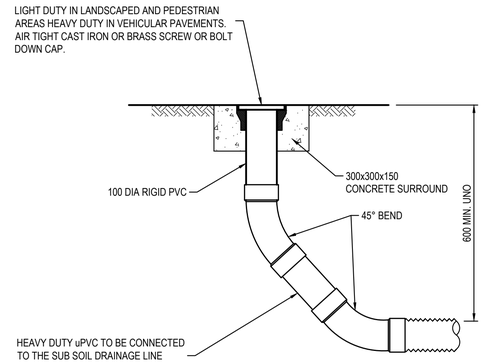

FLUSHING POINT (FP)

SCALE 1:10

NOTE: SLOTTED RIGID PVC PIPE AND FITTINGS MAY BE USED

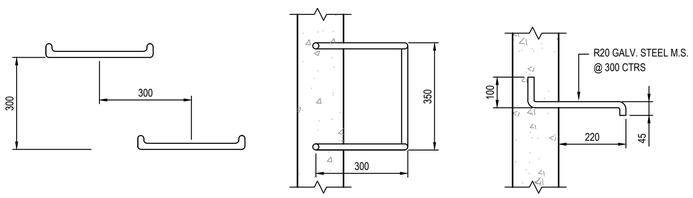

ELEVATION PLAN SECTION

TYPICAL STEP IRON DETAIL

SCALE 1:10

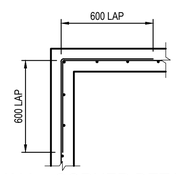

150 WALL - CORNER DETAIL

SCALE 1:20

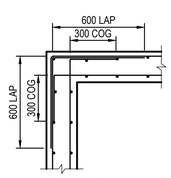

200 WALL - CORNER DETAIL

SCALE 1:20

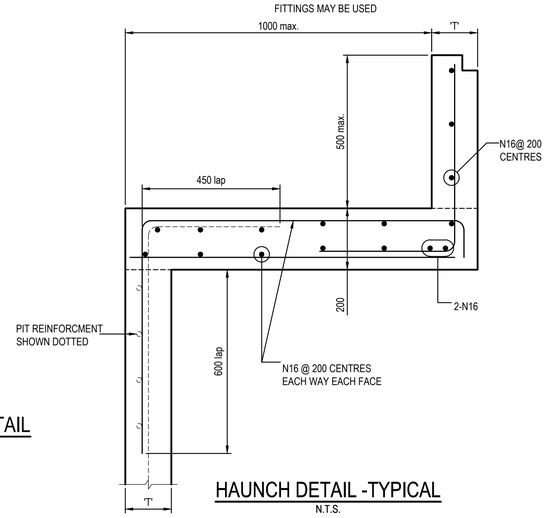

HAUNCH DETAIL -TYPICAL

N.T.S.

DRAINAGE NOTES:

1. ALL STORMWATER WORK TO COMPLY WITH AS 3500 PART 3.

2. CONTRACTOR SHALL BE RESPONSIBLE FOR MAINTAINING THE MINIMUM COVER OF 600mm ON ALL PIPES.

3. PROTECTION OF PIPES DUE TO LOADS EXCEEDING W7 WHEEL LOAD SHALL BE THE CONTRACTOR'S RESPONSIBILITY.

4. BEDDING TYPE SHALL BE TYPE H2 FOR RCP. WHERE NECESSARY THE OVERLAY ZONE SHALL BE REDUCED TO ACCOMMODATE PAVEMENT REQUIREMENTS. REFER TO THIS DRAWING FOR DETAILS.

5. MINIMUM COVER OVER EXISTING PIPES FOR PROTECTION DURING CONSTRUCTION SHALL BE 800mm.

6. NO CONSTRUCTION LOADS SHALL BE APPLIED TO PLASTIC PIPES.

7. FINISHED SURFACE LEVELS SHOWN ON LAYOUT PLAN DRGS TAKE PRECEDENCE OVER DESIGN DRAINAGE SURFACE LEVELS.

8. ALL PIPES UP TO AND INCLUDING 300 DIA. SHALL BE SOLVENT OR RUBBER RING JOINTED PVC CLASS SH PIPE TO AS1260. ALL OTHER PIPES TO BE RCP USING CLASS 2 RUBBER RING JOINTED PIPE. HARDIES FRC PIPE MAY BE USED IN LIEU OF RCP IF DESIRED IN GROUND. ALL AERIAL PIPES TO BE PVC CLASS SH.

9. ALL PITS IN NON TRAFFICABLE AREAS TO BE PREFABRICATED POLYESTER CONCRETE "POLYCRETE" WITH "LIGHT DUTY" CLASS B GALV. MILD STEEL GRATING AND FRAME.
ALL PITS IN TRAFFICABLE AREAS (CLASS "D" LOADING MAX) TO HAVE 150mm THICK CONCRETE WALLS AND BASE CAST IN-SITU f'c=32 MPa, REINFORCED WITH N12-200 BOTH LOADING WAYS CENTRALLY PLACE .U.N.O. ON SEPARATE DESIGN DRAWINGS IN THIS SET. GALV.MILD STEEL GRATING AND FRAME TO SUIT DESIGN LOADING. PRECAST PITS, RECTANGULAR OR CIRCULAR IN SHAPE, MAY BE USED IN LIEU AND SHALL COMPLY WITH RELEVANT AUSTRALIAN STANDARDS.

10. ALL PITS, GRATINGS AND FRAMES SHALL BE INSTALLED IN ACCORDANCE WITH THE MANUFACTURERS SPECIFICATION AND TO BE IN ACCORDANCE WITH AS3500.3 AND AS3996.
11. PIT CHAMBER DIMENSIONS ARE TO BE SELECTED TO SATISFY THE FOLLOWING:
- PIPE SIZE
- DEPTH TO INVERT
- SKEW ANGLE
  REFER TYPICAL PIT CHAMBER DETAILS BELOW
IF PIT LID SIZE IS SMALLER THAN THE PIT CHAMBER SIZE THEN THE PIT LID IS TO BE CONSTRUCTED ON THE CORNER OF THE PIT CHAMBER WITH THE STEP IRONS DIRECTLY BELOW. ALTERNATIVELY THE PIT LID TO BE USED, IS TO BE THE SAME SIZE AS THE PIT CHAMBER.

12. FOR PIPE SIZES GREATER THAN Ø300mm, PIT FLOOR IS TO BE BENCHED TO FACILITATE FLOW.

13. GALVANISED STEP IRONS SHALL BE PROVIDED AT 300 CTS FOR PITS HAVING A DEPTH EXCEEDING 1200mm. SUBSOIL DRAINAGE PIPE SHALL BE PROVIDED IN PIPE TRENCHES ADJACENT TO INLET PIPES. (MINIMUM LENGTH 3m).

14. ALL SUBSOIL PIPES SHALL BE 100mm SLOTTED PVC IN A FILTER SOCK, UNO, WITH 3m INSTALLED UPSTREAM OF ALL PITS.

15. ALL PIPEWORK SHALL HAVE MINIMUM DIAMETER 100.

16. MINIMUM GRADE FOR ROOFWATER DRAINAGE LINES SHALL BE 1%.

17. ALL PIPE JUNCTIONS AND TAPER UP TO AND INCLUDING 300 DIA. SHALL BE VIA PURPOSE MADE FITTINGS.

18. ALL ROOF DRAINAGE TO BE INSTALLED IN ACCORDANCE WITH AS3500, PART 3. TESTING TO BE UNDERTAKEN AND REPORTS PROVIDED TO THE SUPERINTENDENT.

19. LOCATION OF THE DIRECT DOWN PIPE CONNECTIONS MAY VARY ON SITE TO SUIT SITE CONDITIONS, WHERE CONNECTION SHOWN ON LONG SECTIONS CHAINAGES ARE INDICATIVE ONLY.

20. PITS IN EXCESS OF 1.5 m DEEP TO HAVE WALL AND FLOOR THICKNESS INCREASED TO 200mm. REINFORCED WITH N12@200 CTS CENTRALLY PLACED BOTH WAYS THROUGHOUT U.N.O.ON SEPARATE DESIGN DRAWINGS IN THIS SET. IF DEPTH EXCEEDS 5m CONTACT ENGINEER.

21. SUBSOIL DRAINAGE LINES FOR LANDSCAPE AREA NOT SHOWN ON THESE DRAWINGS. REFER TO LANDSCAPING PLANS FOR DETAILS.

22. ALL STORMWATER PITS TO HAVE Ø100 uPVC SLOTTED SUBSOIL PIPES CONNECTED TO THEM. THESE SUBSOILS TO EXTEND 3m UPSTREAM OF THE PIT AT A MINIMUM GRADE.

FOR INFORMATION ONLY

0 400 800 1200 1600 2000mm
400 200
SCALE 1:20

0 200 400 600 800 1000mm
200 100
SCALE 1:10

SURVEY INFORMATION
SURVEYED BY:
CRUX SURVEYING AUSTRALIA
DATUM: AHD
ORIGIN OF LEVELS: SSM 99001, RL 53.939 (AHD)

REVISION	AMENDMENT	DRAWN	DESIGNED	DATE	REVISION	AMENDMENT	DRAWN	DESIGNED	DATE
01	ISSUED FOR INFORMATION ONLY	KR	AF	07.04.2020					

Client
KINCOPPAL ROSE BAY SCHOOL

Architect
BVN Architects

This drawing and design remains the property of Henry & Hymas and may not be copied in whole or in part without the prior written approval of Henry & Hymas.

Level 5,
79 Victoria Avenue
Chatswood NSW 2067

Telephone +61 2 9417 8400
Facsimile +61 2 9417 8337
Email email@hhconsult.com.au
Web www.henryandhymas.com.au

henry&hymas

Project
KINCOPPAL ROSE BAY SCHOOL
NEW SOUTH HEAD ROAD, ROSE BAY, NSW

Title
STORMWATER MISCELLANEOUS DETAILS AND PIT LID SCHEDULE

Drawn	Designed	Date
J.Knight	I.Ahmed	JAN 2020
Checked	Approved	Scale @A1
A.Francis	A.Francis	1:100

Drawing number 19949_DA_C200
Revision 01

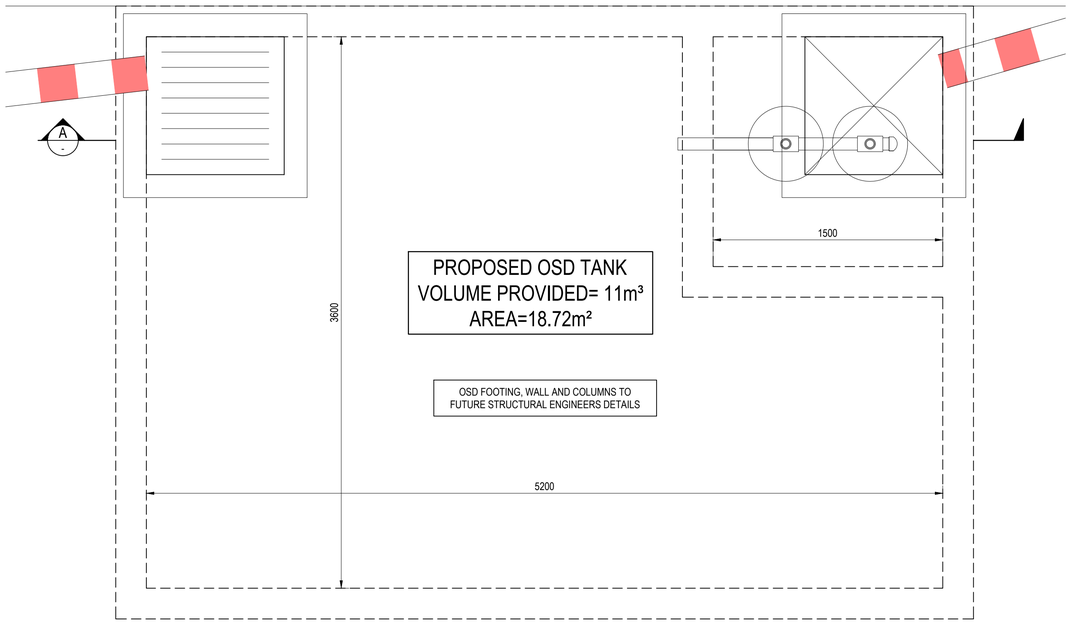

OSD PLAN

SCALE 1:20

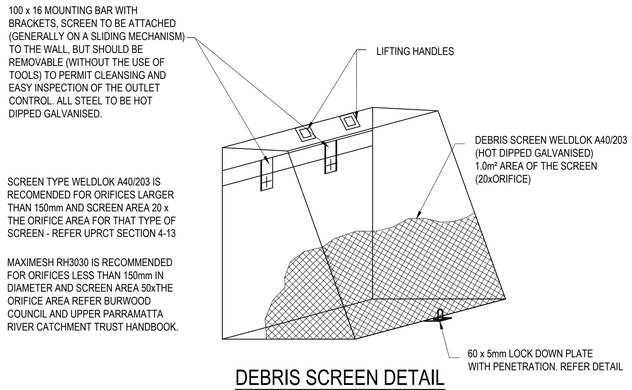

DEBRIS SCREEN DETAIL

NOT TO SCALE
ALL STEEL TO BE HOT DIPPED GALVANISED

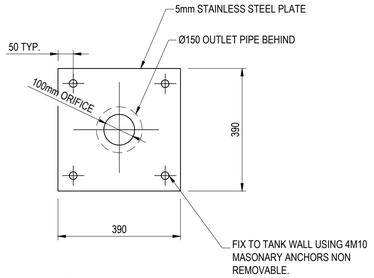

ORIFICE PLATE DETAIL

SCALE 1:10

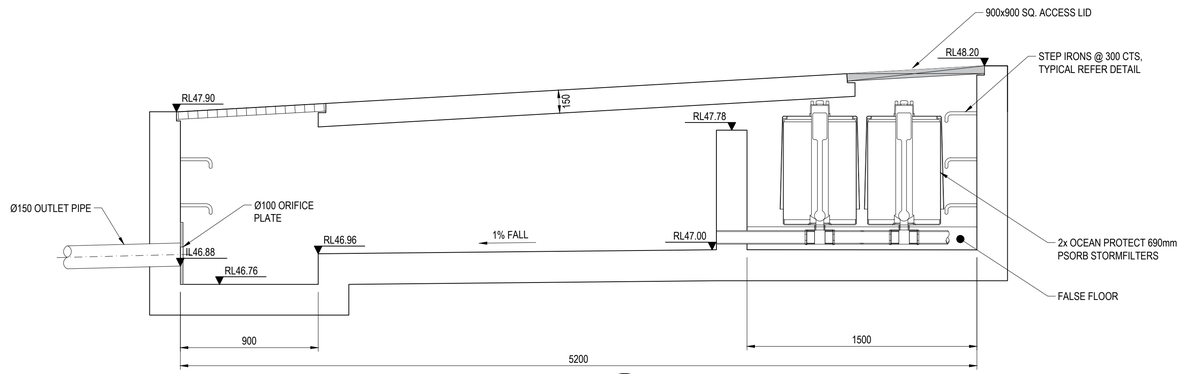

SECTION A

SCALE: 1:20

0 400 800 1200 1600 2000mm
400 200
SCALE 1:20

0 200 400 600 800 1000mm
200 100
SCALE 1:10

FOR INFORMATION ONLY

SURVEY INFORMATION
SURVEYED BY:
CRUX SURVEYING AUSTRALIA
DATUM: AHD
ORIGIN OF LEVELS: SSM 99001, RL 53.939 (AHD)

REVISION	AMENDMENT	DRAWN	DESIGNED	DATE	REVISION	AMENDMENT	DRAWN	DESIGNED	DATE
01	ISSUED FOR INFORMATION ONLY	KR	AF	07.04.2020					

Client
KINCOPPAL ROSE BAY SCHOOL

Architect
BVN Architects

This drawing and design remains the property of Henry & Hymas and may not be copied in whole or in part without the prior written approval of Henry & Hymas.

Level 5,
79 Victoria Avenue
Chatswood NSW 2067
Telephone +61 2 9417 8400
Facsimile +61 2 9417 8337
Email email@hhconsult.com.au
Web www.henryandhymas.com.au
henry&hymas

Project
KINCOPPAL ROSE BAY SCHOOL
NEW SOUTH HEAD ROAD, ROSE BAY, NSW

Title
OSD TANK PLAN AND DETAILS

Drawn	Designed	Date
J.Knight	I.Ahmed	JAN 2020
Checked	Approved	Scale @A1
A.Francis	A.Francis	AS NOTED

Drawing number 19949_DA_C201
Revision 01

SENIOR SCHOOL - STORMWATER CATCHMENT PLAN - PRE DEVELOPMENT

SCALE: NTS

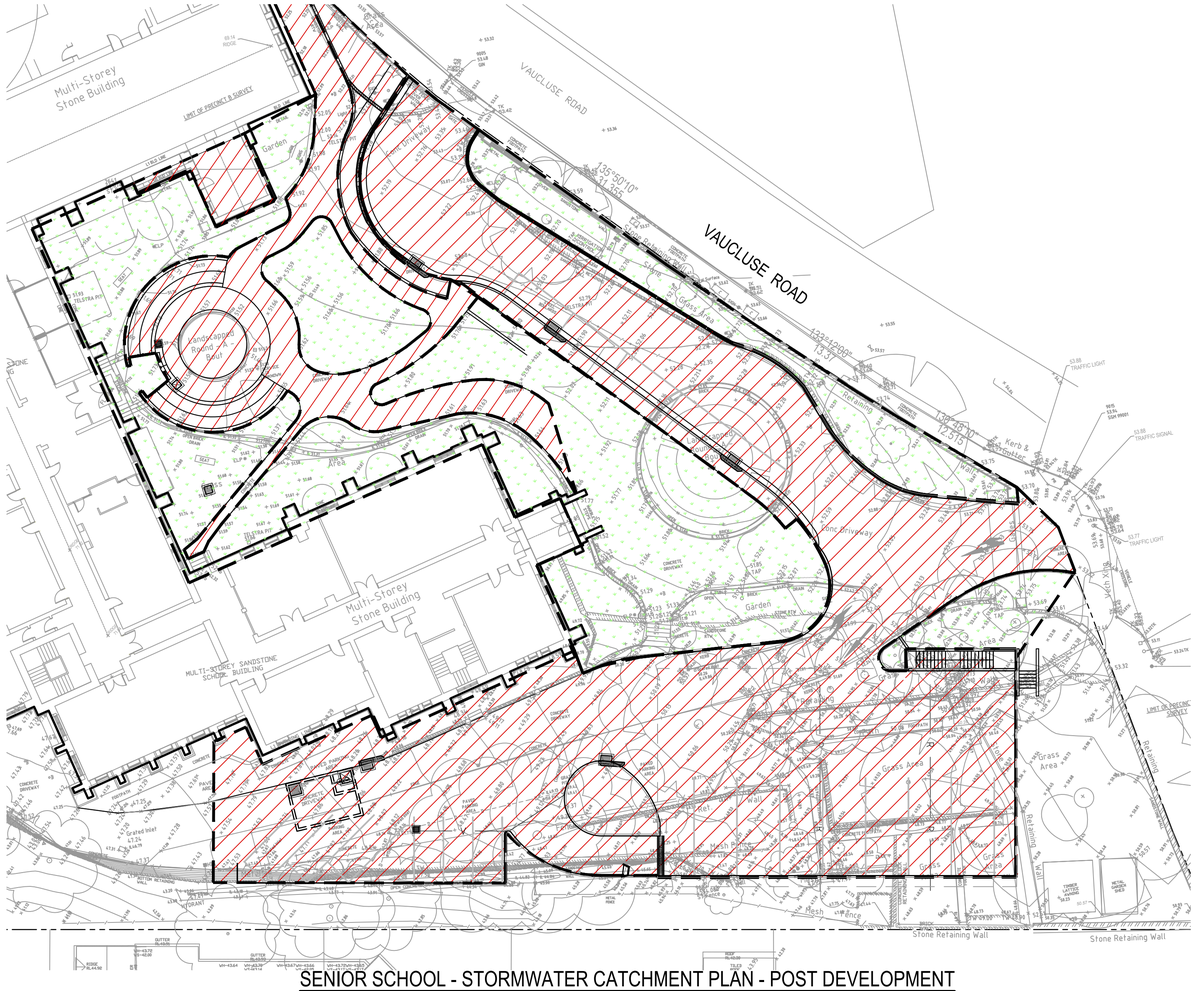

SENIOR SCHOOL - STORMWATER CATCHMENT PLAN - POST DEVELOPMENT

SCALE: NTS

PRE DEVELOPMENT CATCHMENT AREA

PERVIOUS AREA = 1038m²

IMPERVIOUS AREA = 2226m²

TOTAL AREA = 3264m²

POST DEVELOPMENT CATCHMENT AREA

PERVIOUS AREA = 1146m²

IMPERVIOUS AREA = 2100m²

TOTAL AREA = 3246m²

FOR INFORMATION ONLY

SURVEY INFORMATION
SURVEYED BY:
CRUX SURVEYING AUSTRALIA
DATUM: AHD
ORIGIN OF LEVELS: SSM 99001, RL 53.939 (AHD)

REVISION	AMENDMENT	DRAWN	DESIGNED	DATE	REVISION	AMENDMENT	DRAWN	DESIGNED	DATE
01	ISSUED FOR INFORMATION ONLY	KR	AF	07.04.2020					

Client
KINCOPPAL ROSE BAY SCHOOL

Architect
BVN Architects

This drawing and design remains the property of Henry & Hymas and may not be copied in whole or in part without the prior written approval of Henry & Hymas.

Level 5,
79 Victoria Avenue
Chatswood NSW 2067

Telephone
+61 2 9417 8400
Facsimile
+61 2 9417 8337
Email
email@hhconsult.com.au
Web
www.henryandhymas.com.au

henry&hymas

Project
KINCOPPAL ROSE BAY SCHOOL
NEW SOUTH HEAD ROAD, ROSE BAY, NSW

Title
SENIOR SCHOOL - STORMWATER CATCHMENT PLAN - PRE AND POST DEVELOPMENT

Drawn	Designed	Date
J.Knight	I.Ahmed	JAN 2020
Checked	Approved	Scale @A1
A.Francis	A.Francis	1:100

Drawing number: 19949_DA_C250

Revision: 01

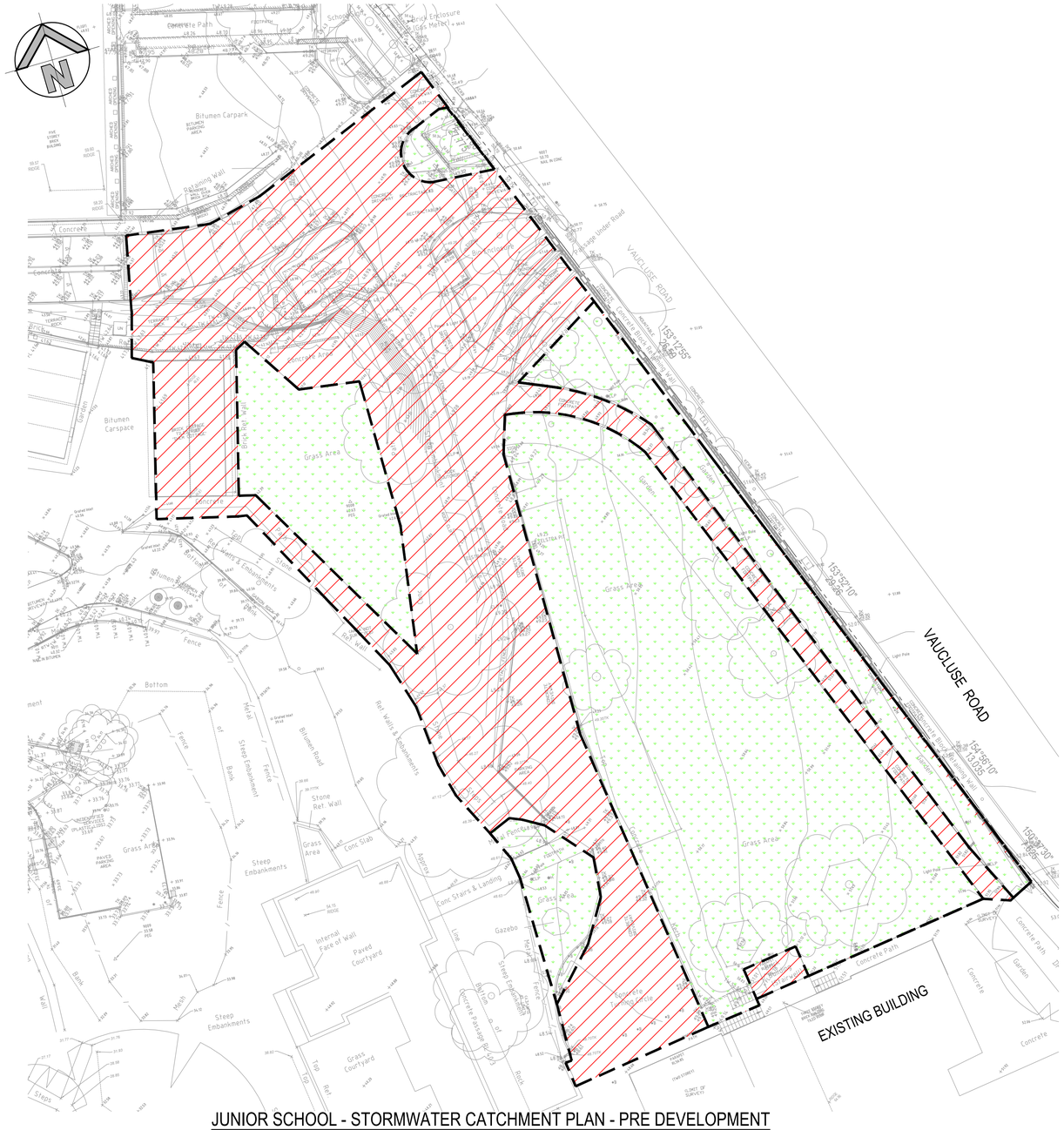

JUNIOR SCHOOL - STORMWATER CATCHMENT PLAN - PRE DEVELOPMENT

SCALE: NTS

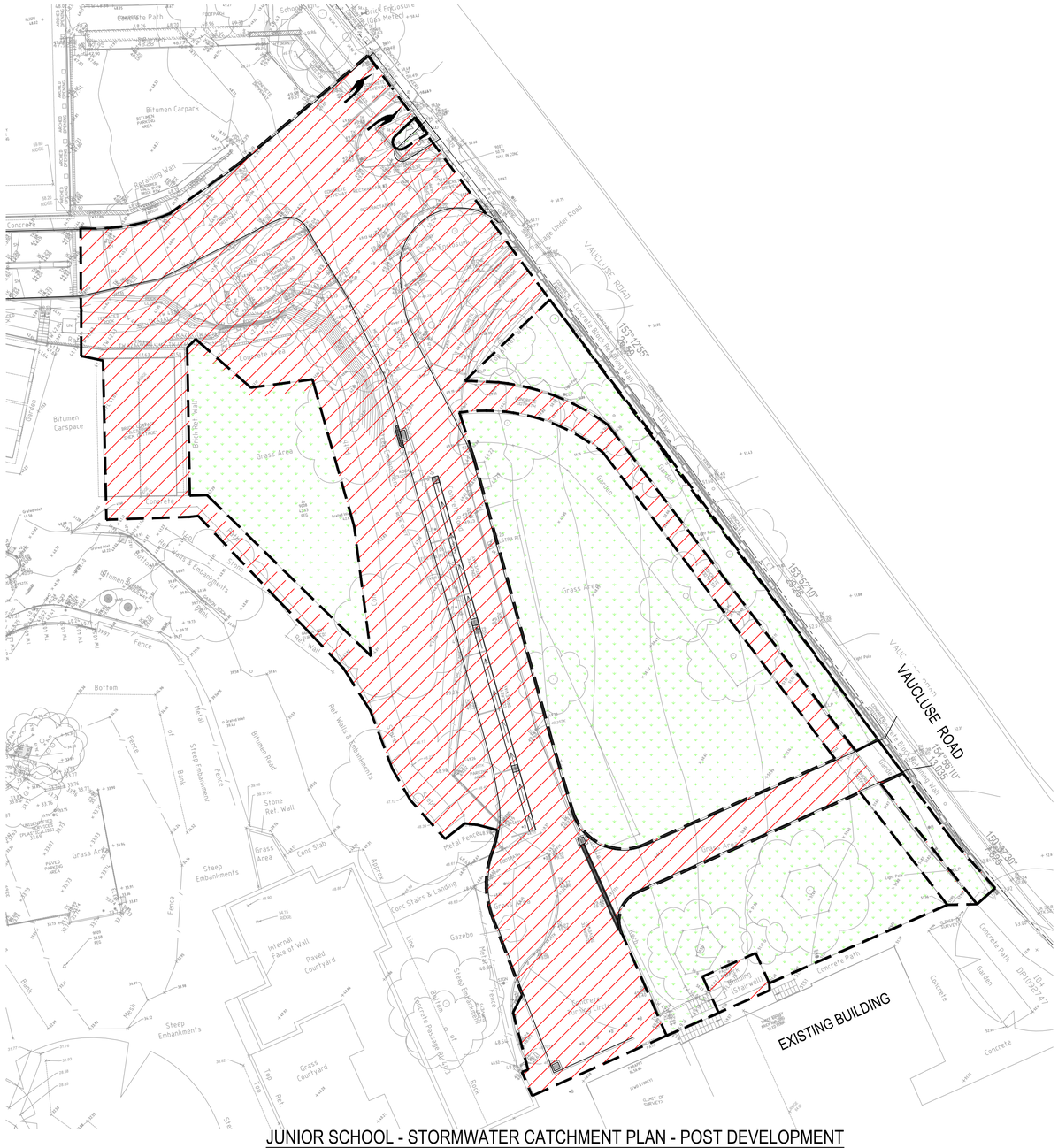

JUNIOR SCHOOL - STORMWATER CATCHMENT PLAN - POST DEVELOPMENT

SCALE: NTS

PRE DEVELOPMENT CATCHMENT AREA

PERVIOUS AREA = 1737m²

IMPERVIOUS AREA = 1801m²

TOTAL AREA = 3538m²

POST DEVELOPMENT CATCHMENT AREA

PERVIOUS AREA = 1548m²

IMPERVIOUS AREA = 1990m²

TOTAL AREA = 3538m²

FOR INFORMATION ONLY

SURVEY INFORMATION
SURVEYED BY:
CRUX SURVEYING AUSTRALIA
DATUM: AHD
ORIGIN OF LEVELS: SSM 99001, RL 53.939 (AHD)

REVISION	AMENDMENT	DRAWN	DESIGNED	DATE	REVISION	AMENDMENT	DRAWN	DESIGNED	DATE
01	ISSUED FOR INFORMATION ONLY	KR	AF	-					

Client
KINCOPPAL ROSE BAY SCHOOL

Architect
BVN Architects

This drawing and design remains the property of Henry & Hymas and may not be copied in whole or in part without the prior written approval of Henry & Hymas.

Level 5,
79 Victoria Avenue
Chatswood NSW 2067

Telephone
+61 2 9417 8400
Facsimile
+61 2 9417 8337
Email
email@hhconsult.com.au
Web
www.henryandhymas.com.au

henry&hymas

Project
KINCOPPAL ROSE BAY SCHOOL
NEW SOUTH HEAD ROAD, ROSE BAY, NSW

Title
JUNIOR SCHOOL - STORMWATER CATCHMENT PLAN - PRE AND POST DEVELOPMENT

Drawn	Designed	Date
J.Knight	I.Ahmed	JAN 2020
Checked	Approved	Scale @A1
A.Francis	A.Francis	1:100

Drawing number: 19949_DA_C251

Revision: 01