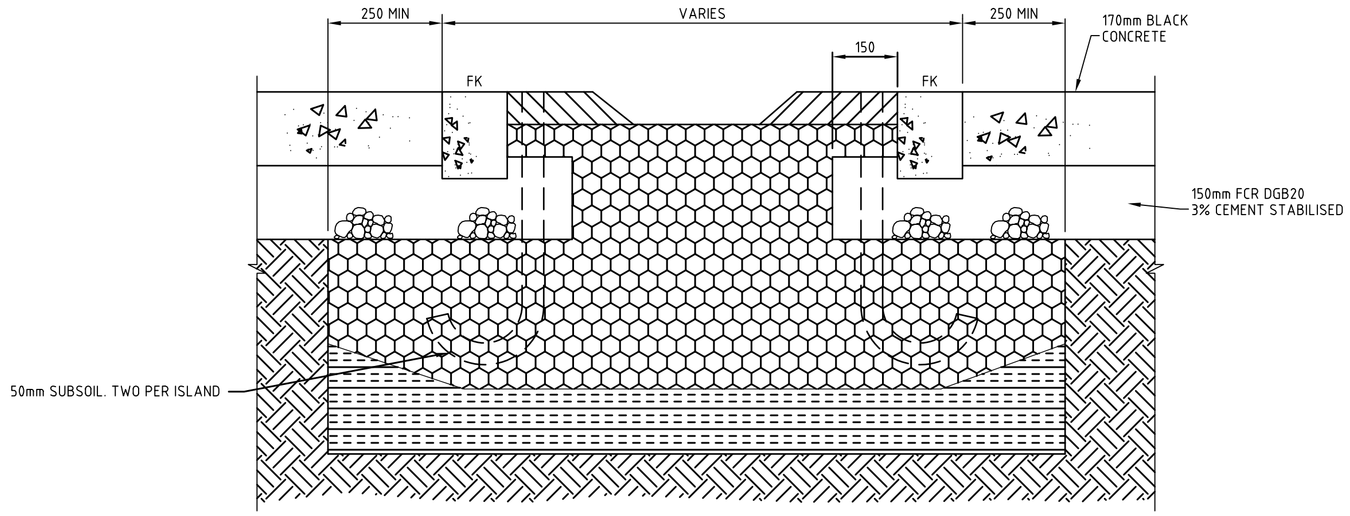

SECTION A
1 : 10
C112
C113
C115
C116

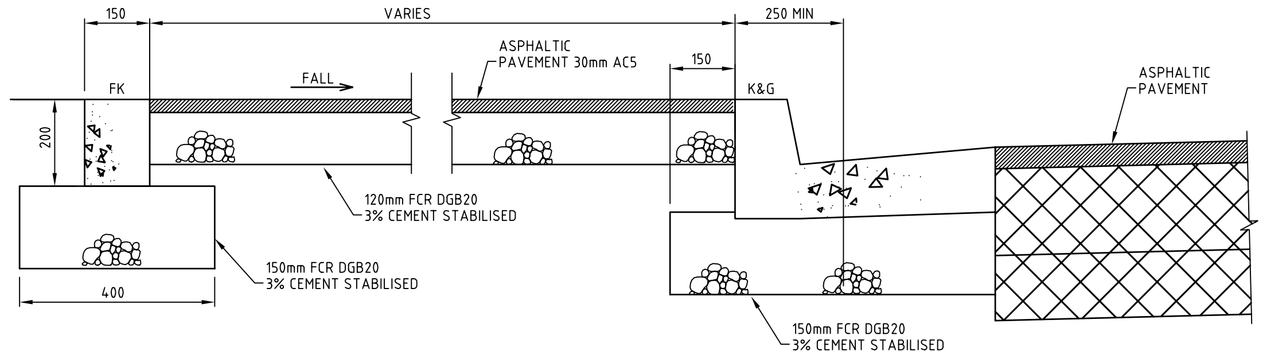

SECTION F
1 : 10
C113
C116
C119

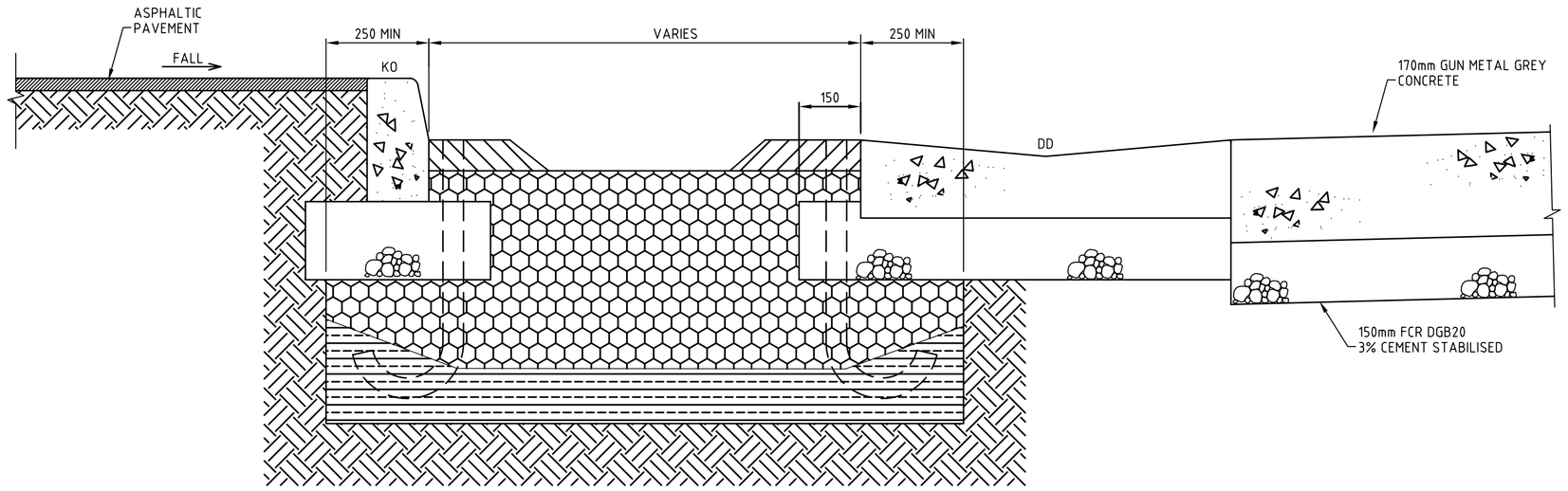

SECTION C
1 : 10
C112
C115
C116

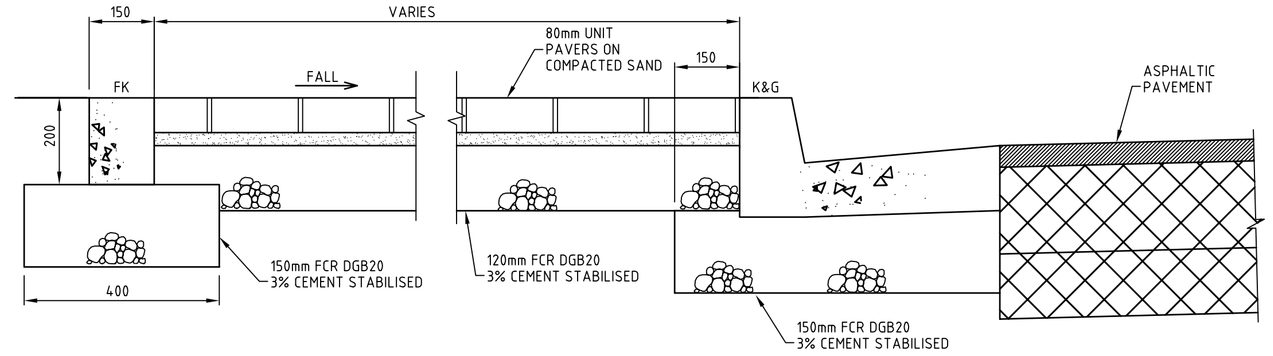

SECTION G
1 : 10
C113
C116
C119

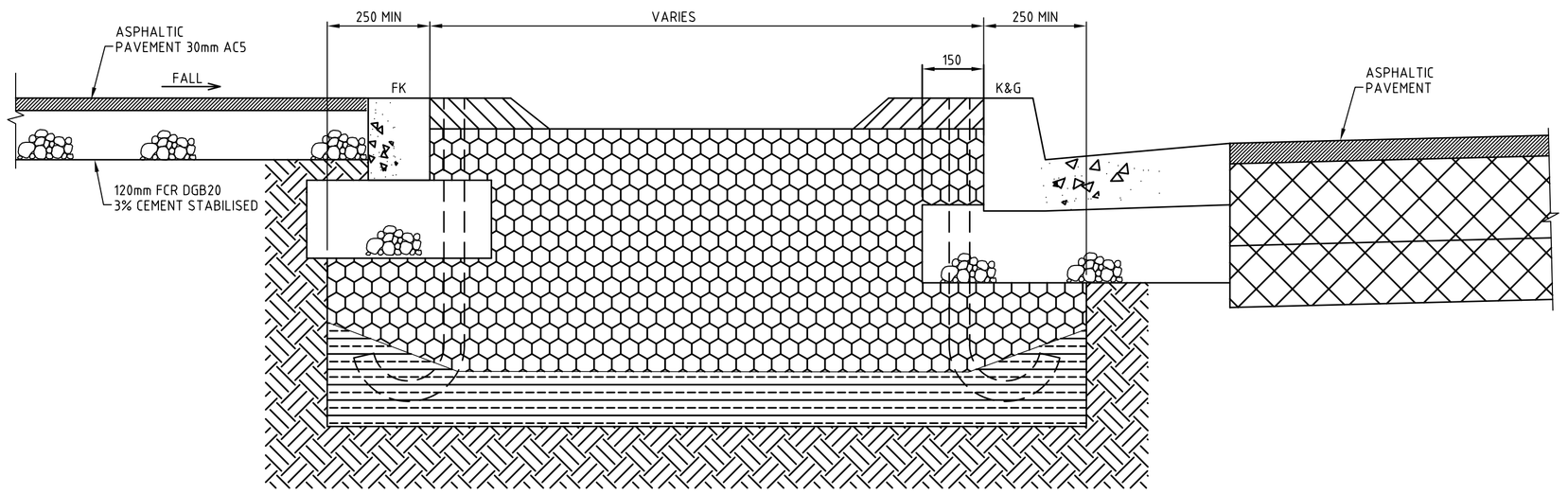

SECTION E
1 : 10
C113
C116
C119

0 100 200 400 600 800 1000mm

1 : 10

LEGEND:

- 75mm DEPTH DECOMPOSED GRAVEL MULCH.
- EXISTING SUBGRADE
- 150mm DEPTH DGB20 BASECOURSE
- 700 mm DEPTH STRUCTURAL SOIL MIX TO LANDSCAPE ARCHITECTS SPECIFICATION COMPACTED TO 98% SMDD, WHERE UNDER KERBS
- CULTIVATE SUBGRADE TO 150mm DEPTH

Issue	Amendment	By	Date
1	COUNCIL DA SUBMISSION	EL	22/11/05
2	COUNCIL CC SUBMISSION	EL	12/12/07
3	WALKER ST OFFSET CROWN REMOVED	EL	15/05/08
4	WALKER STREET LEVELS LOWERED	EL	04/05/09
5	WALKER STREET CARRIAGEWAY WIDENED	EL	28/05/09
6	ISSUED FOR CONSTRUCTION	EL	31/08/09
7	COVER SLAB ADDED OVER GAS MAIN	EL	15/09/09

1. Do not scale off this drawing. Use dimensions & architectural drawings only
2. Drawings to be read in conjunction with specification.
3. Levels are indicative only and are to be checked prior to commencement of any works
4. Authorities mains and/or existing services are to be located and checked prior to commencement of any works
5. The information on this drawing is to be used for Walker Street works only. Refer to Hyder Consulting Drawings for internal site infrastructure works.

KEY PLAN

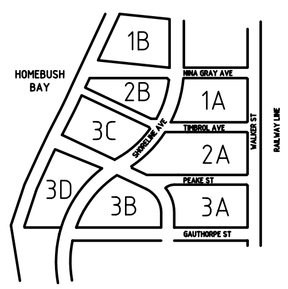

CLIENT

Billbergia Developments Pty Ltd

BILLBERGIA GROUP
LEVEL 3, No.1 BAY DRIVE, MEADOWBANK NSW 2114
TELEPHONE (02) 8878 6900 FACSIMILE (02) 9808 5989

PROJECT

WATERPOINT®
RHODES STAGE 1A

SITE 1A - 40 WALKER STREET
RHODES NSW 2138

DRAWING TITLE

ROADWORKS DETAILS
SHEET 2

DATE DRAWN 30.09.06	SCALE 1:200	
PROJECT NUMBER 3191	DRAWING NUMBER	ISSUE
DRAWN BY EL	C148-V7	7