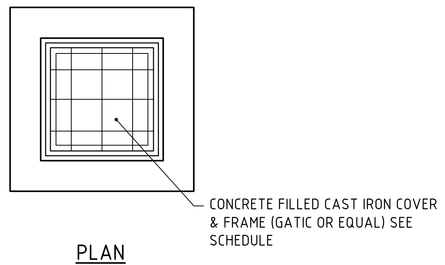

PLAN
SCALE 1:20

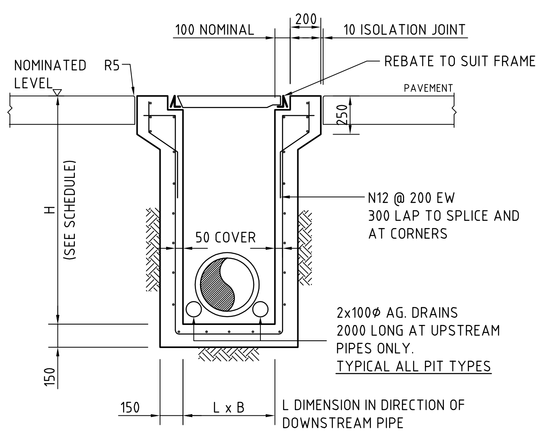

SECTION
SCALE 1:20

SEALED PIT - SJP

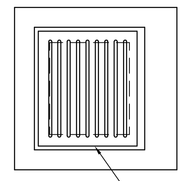

PLAN
SCALE 1:20

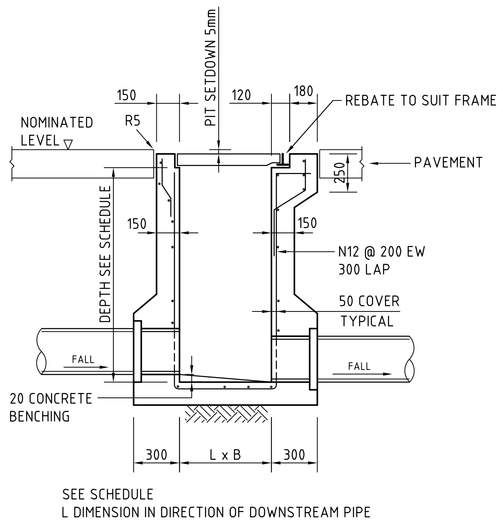

SECTION
SCALE 1:20

SINGLE GRATED GULLY PIT - SGGP

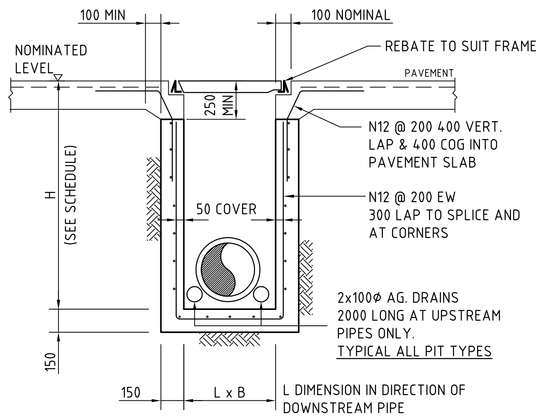

SECTION
SCALE 1:20

ALTERNATIVE PIT DETAIL - GRATE/COVER SUPPORT CAST-INTO PAVEMENT SLAB

(ADOPT AS REQUIRED FOR SGGP's & SJP's)

CONCRETE QUALITY					
ELEMENT	SLUMP	AGGREGATE (MAX. SIZE)	CEMENT TYPE	ADMIXTURE	F'c (MPa)
PIT	80	20	GP	NIL	20

PIT NOTES:

1. WHERE GULLY PIT IS LOCATED ON KERB RETURNS OR BULB OF CUL-DE-SACS PROVIDE CURVED PRECAST CONCRETE LINTELS.
2. SAG PITS SHALL HAVE LINTEL PLACED CENTRALLY ABOUT THE GRATE.
3. ALL REINFORCING TO HAVE 30 MIN. CLEAR CONCRETE COVER.
4. FOR PITS DEEPER THAN 1000mm CLIMB RAILS SHALL BE PROVIDED.

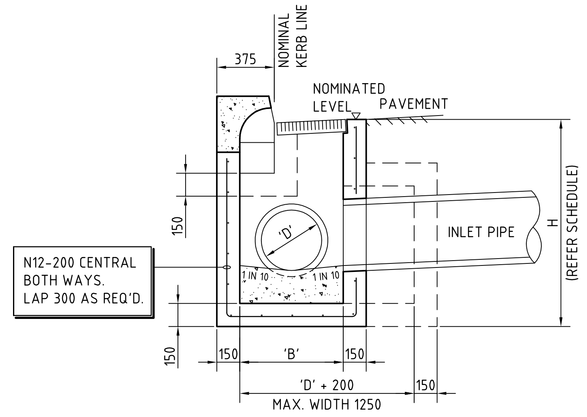

CROSS SECTION.
SCALE 1:20

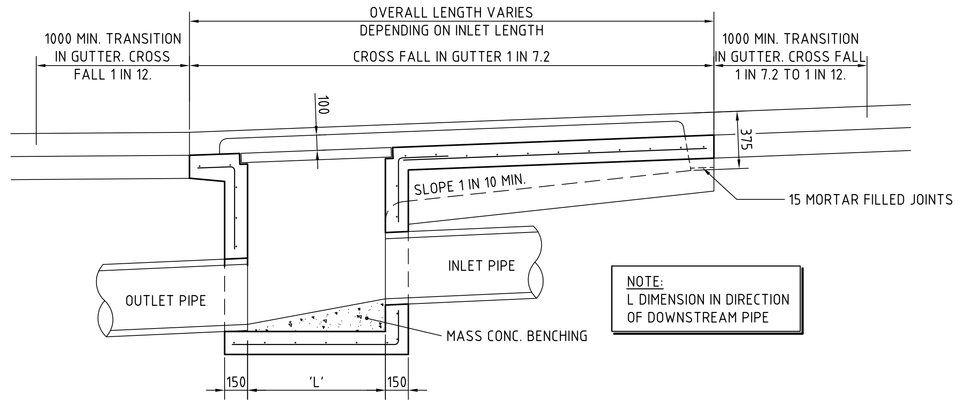

NOTE:
L DIMENSION IN DIRECTION OF DOWNSTREAM PIPE

LONGITUDINAL SECTION
SCALE 1:20

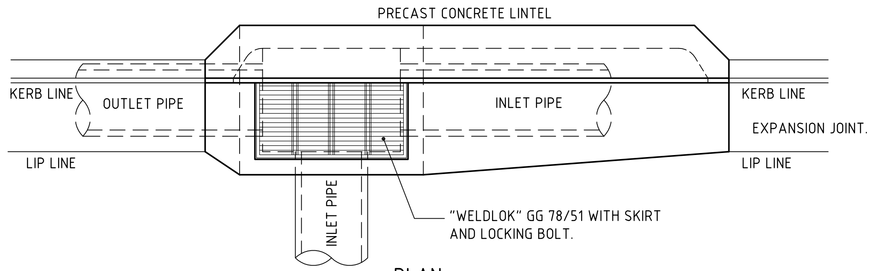

PLAN
SCALE 1:20

KERB INLET PIT - KIP

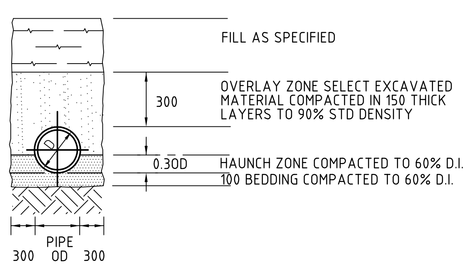

TYPE H1 SUPPORT TO CONCRETE PIPES AT LANDSCAPED AREAS

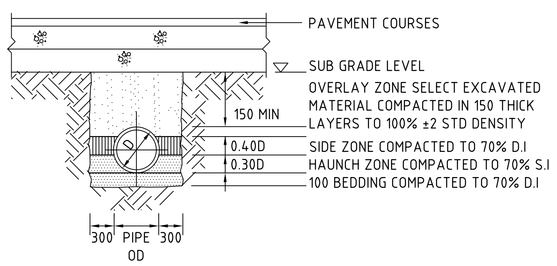

TYPE H3 SUPPORT TO CONCRETE PIPES UNDER PAVEMENT

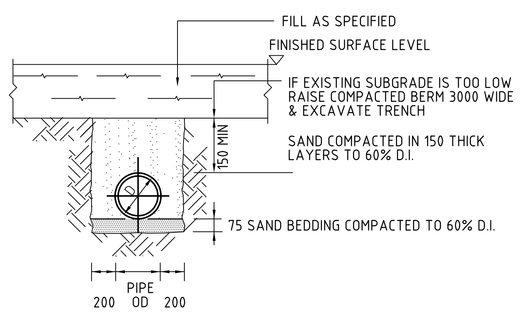

SUPPORT TO uPVC PIPES

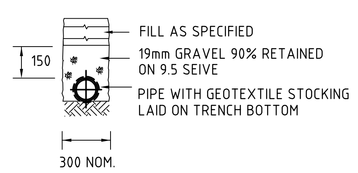

SUPPORT TO AG. DRAIN

BEDDING & HAUNCH MATERIAL GRADING	
SIEVE SIZE	WEIGHT PASSING(%)
19	100
2.36	100 TO 50
0.60	90 TO 50
0.30	60 TO 10
0.15	25 TO 0
0.075	10 TO 0

SIDE ZONE MATERIAL GRADING	
SIEVE SIZE	WEIGHT PASSING(%)
75	100
9.5	100 TO 50
2.36	100 TO 30
0.60	50 TO 15
0.075	25 TO 0

PIPE LAYING DETAILS

1:20

200mm 0 500 1000 1500 2000mm
SCALE 1:20 AT A0 SIZE SHEET

FOR DEVELOPMENT APPLICATION

AMENDMENTS	DATE	ISSUE
FOR DEVELOPMENT APPLICATION	22.06.10	B
FOR REVIEW	15.06.10	A

ARCHITECT: AUSTRALAND
COMMERCIAL & INDUSTRIAL DIVISION
LEVEL 3, 1C, HOMEBUSH BAY DRIVE RHODES, NSW 2138
LOCKED BAG 2106 NORTH RYDE, NSW 21670
PHONE : (02) 9767 2000
FAX : (02) 9767 2908

CLIENT: AUSTRALAND
COMMERCIAL & INDUSTRIAL DIVISION
LEVEL 3, 1C, HOMEBUSH BAY DRIVE RHODES, NSW 2138
LOCKED BAG 2106 NORTH RYDE, NSW 21670
PHONE : (02) 9767 2000
FAX : (02) 9767 2908

PROJECT
KMART SITE
LOT 2, DP1149138
EASTERN CREEK SITE STAGE 3

DESIGNED	DRAWN	DATE	CHECKED	SIZE	SCALE	CAD REF.
Q.M.	J.M.	03.06.10		A0	AS SHOWN	10726.01-C45

Costin Roe Consulting Pty Ltd.
Consulting Engineers ACN 003 696 448
Suite 310, 55 Harrington Street
The Rocks, Sydney NSW 2000
Tel: (02) 9251-7699 Fax: (02) 9241-3731
email: mail@costinroe.com.au

Costin Roe Consulting
Value in Engineering and Management

DRAWING TITLE: STORMWATER DETAILS SHEET 1
DRAWING No: C010726.01-C45
ISSUE: B