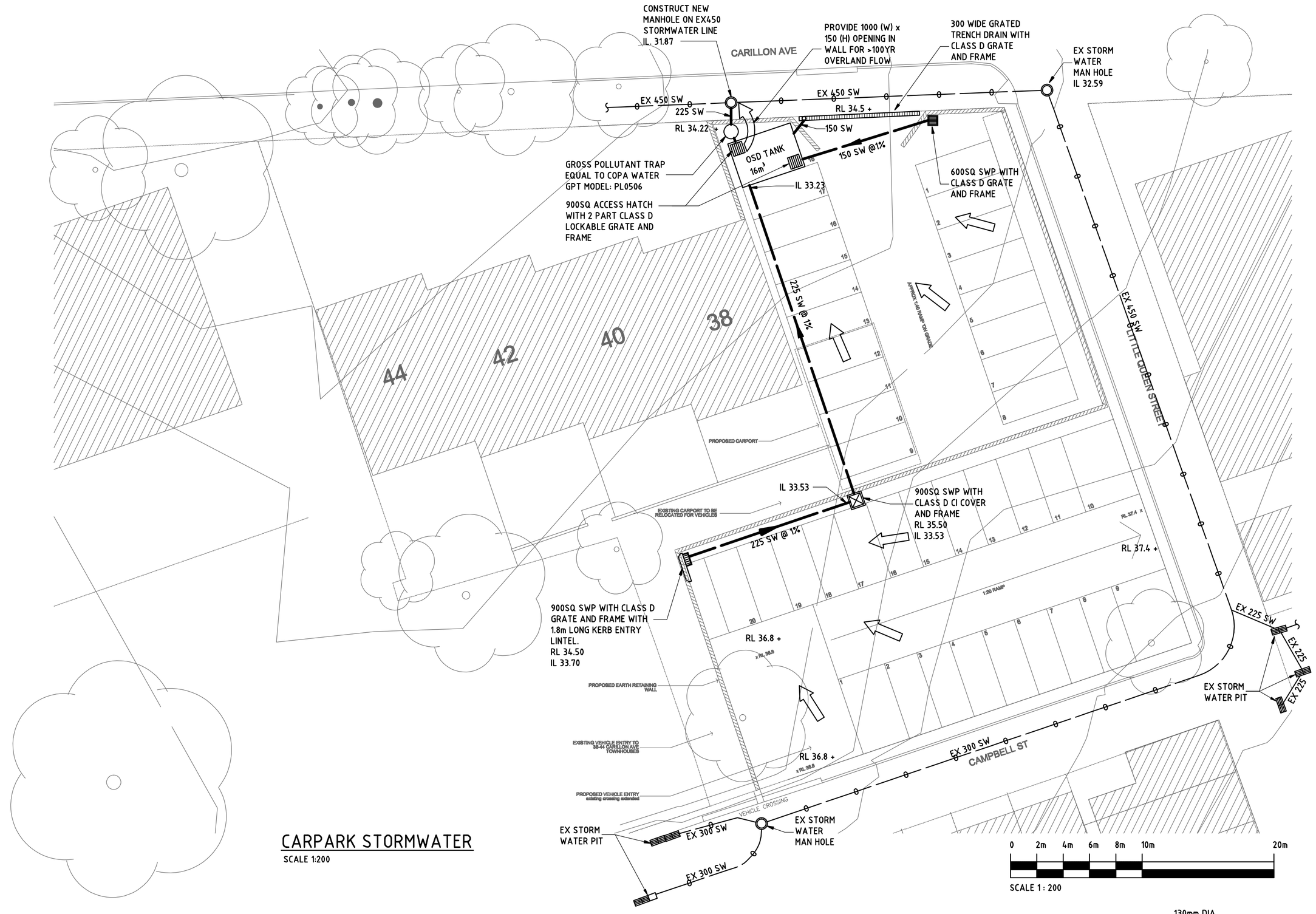

CARPARK STORMWATER

SCALE 1:200

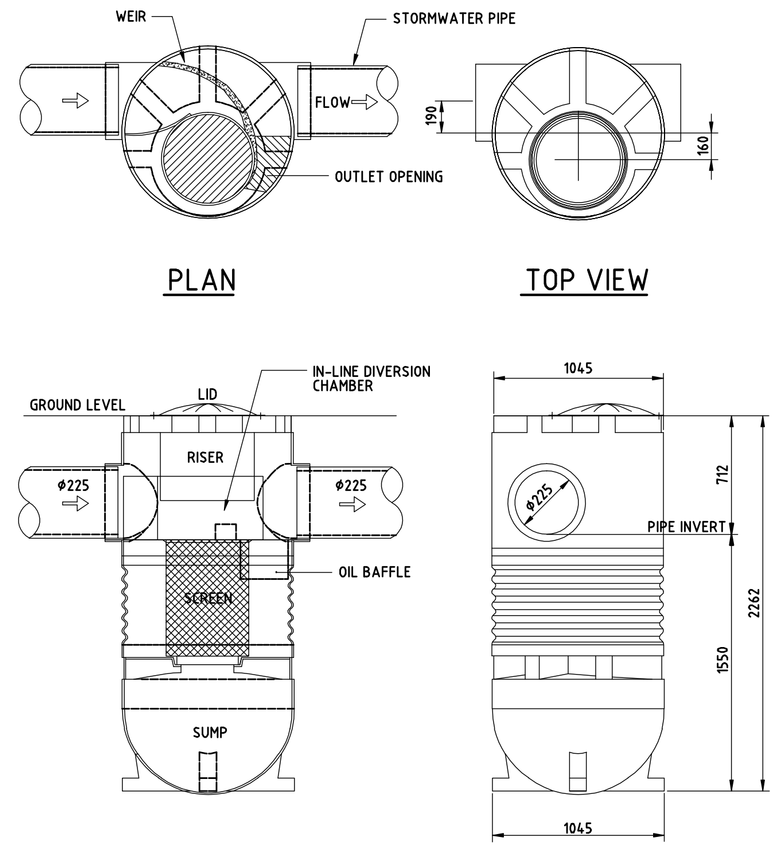

D1 POLLUTION UNIT
COPA/CDS MODEL PL0506

NOT TO SCALE

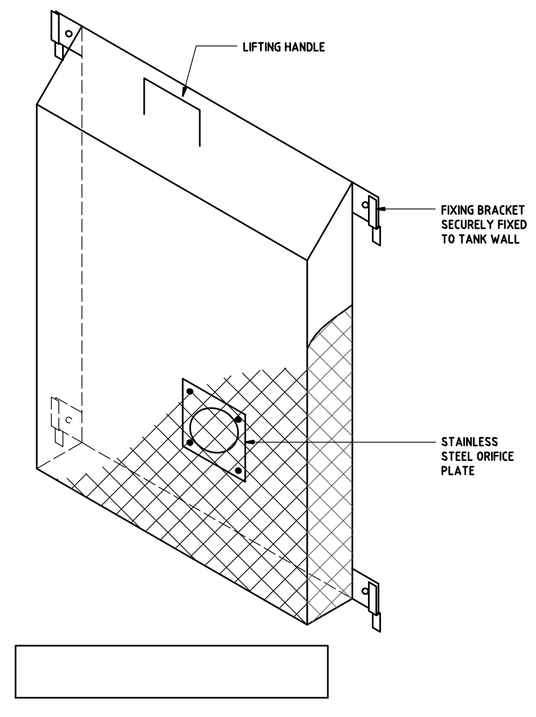

TRASH RACK DETAIL

NOT TO SCALE

NOTES:

1. ALLOW TO CO-ORDINATE WITH EXISTING SERVICES AND OTHER TRADES.
2. EXISTING SERVICES SHOWN ARE APPROXIMATE ONLY. ALLOW TO CONFIRM ON SITE LOCATION AND EXTENT OF SERVICES
3. ALL WORK SHALL COMPLY WITH AS 3500 AND NSW CODE OF PRACTICE, PLUMBING AND DRAINAGE
4. READ PLANS TOGETHER WITH ARCHITECTURAL DRAWINGS.
5. INSTALL STORMWATER DRAINAGE WITH REQUIREMENTS OF AS 3500.3
6. MINIMUM GRADES FOR STORMWATER DRAINAGE:

PIPE DIAMETER IN mm	100	1%
PIPE DIAMETER IN mm	150	1%
PIPE DIAMETER IN mm	225	0.5%
PIPE DIAMETER IN mm	300	0.4%
PIPE DIAMETER IN mm	375	0.35%

CALCULATIONS:

REFER TO ATTACHED DRAINS FILE FOR CALCULATIONS OF RUNOFF FROM SITE AND REQUIRED OSD VOLUME FOR COMPLYING DEVELOPMENT

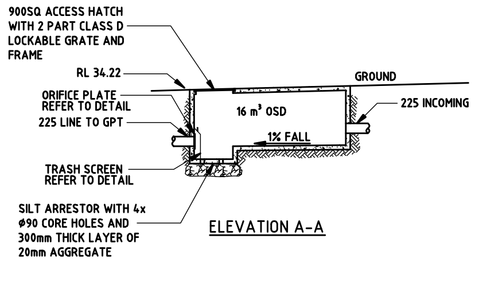

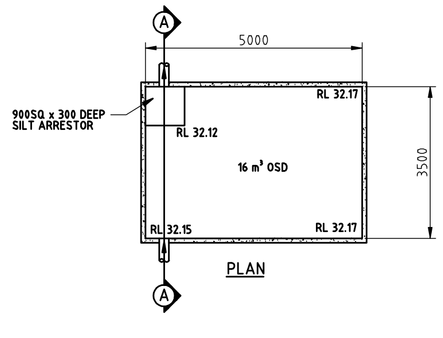

OSD TANK DETAIL

SCALE 1:100

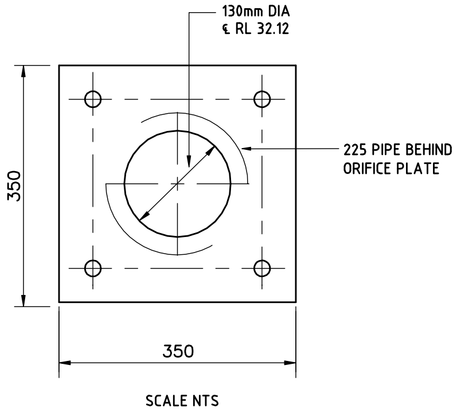

SCALE NTS

ORIFICE PLATE

6mm THICK STAINLESS STEEL SECURELY FIXED TO OSD TANK WALL WITH 4 OF 12mm DYNA BOLTS

Revisions				
No	Date	Description	Ver	App'd
A	14.10.09	ISSUED FOR CLIENT REVIEW		DH

Do not scale drawings. Use figured dimensions only. Check & verify levels and dimensions on site prior to the commencement of any work, the preparation of shop drawings or the fabrication of components.

This drawing is the copyright of Allen Jack + Cottier Architects and is protected under the Copyright Act 1968. Do not alter, reproduce or transmit in any form, or by any means without the express permission of Allen Jack + Cottier Architects.

Nominated Architects: Keith Cottier AM 2264, Glynn N Evans 2839, Michael Heenan 5264, Peter Ireland 6661, Reginald Smith 3312, Peter Stronach 3372.

Site Location Plan

Hydraulic Consultant

SPARKS AND PARTNERS
HYDRAULIC, CIVIL & FIRE SERVICES CONSULTANTS
Q.J. SPARKS & PARTNERS PTY. LTD.
A.B.N. 69 000 480 980
L 1 91 GEORGE STREET, PARRAMATTA
NEW SOUTH WALES 2 1 5 0
TEL. (02) 9891 3855 FAX (02) 9891 3899
EMAIL. mail@jqsparks.com.au

QUALITY ASSURED COMPANY ISO 9001 : 2000

Client: MOORE THEOLOGICAL COLLEGE

Architect: ALLEN JACK+COTTIER
79 Myrtle Street Chippendale NSW 2008 AUSTRALIA
ph +61 2 9311 8222 fx +61 2 9311 8200 ABN 53 003 782 250

Project: SITE B - CARPARK
CARRILON AVENUE NEWTOWN

Proj No. 09993

Drawing Title: STORMWATER SERVICES SITE PLAN

Drawing Status: PROJECT APPLICATION

Scale: 1:200

Drawing No: SW-01

Issue: A

0 10 20 50 80mm

A1

PLOT DATE & TIME: $DATE$ PLOTTED & CHECKED BY: $USER$ REF: $FILE$