A1

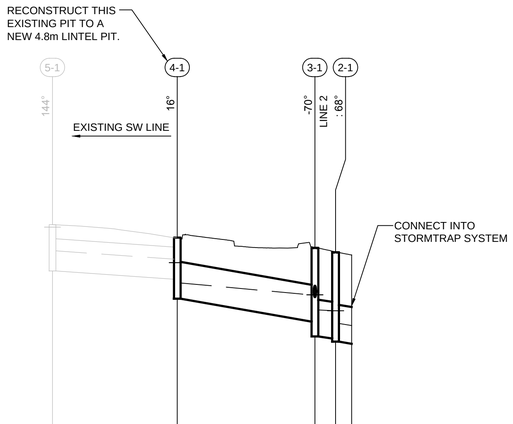


| | | | | | |
|---|---|---|---|---|---|
| DISCHARGE (L/s) | 2473 | 2956 | 2967 | 2968 | |
| CAPACITY (L/s) | | | | | |
| PIPE GRADE (%) | 1.3% | 3.3% | 2.0% | 2.0% | |
| PIPE SIZE (mm) | 1050 | 1200 | 1200 | 1200 | |
| PIPE CLASS | Concrete, Class 2 | Concrete, Class 2 | | | |
| DATUM (m) | 15.00 | | | | |
| SURFACE LEVEL | 27.47 | 27.05 | 26.71 | 26.57 | 26.46 |
| HYDRAULIC GRADE LINE | 27.39 / 26.61 | 26.34 / 26.23 / 25.57 | 25.18 | 24.68 / 24.66 | 24.25 / 24.20 |
| INVERT LEVEL | 26.16 / 25.96 | 25.69 / 25.06 | 24.31 | 23.82 / 23.75 | 23.65 / 23.60 |
| PIPE CHAINAGE | 5.99 | 26.37 | 48.83 | 52.21 | 54.83 |

LINE 1

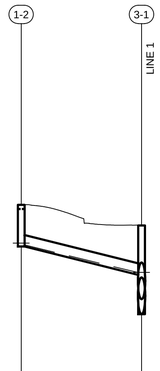


| | | |
|---|---|---|
| DISCHARGE (L/s) | 16 | |
| CAPACITY (L/s) | | |
| PIPE GRADE (%) | 4.7% | |
| PIPE SIZE (mm) | 375 | |
| PIPE CLASS | Concrete, Class 2 | |
| DATUM (m) | 16.00 | |
| SURFACE LEVEL | 27.39 | 26.71 |
| HYDRAULIC GRADE LINE | 26.14 / 26.08 | 25.18 / 24.68 |
| INVERT LEVEL | 26.03 | 25.10 / 23.82 |
| PIPE CHAINAGE | 0.00 | 19.64 |

LINE 2

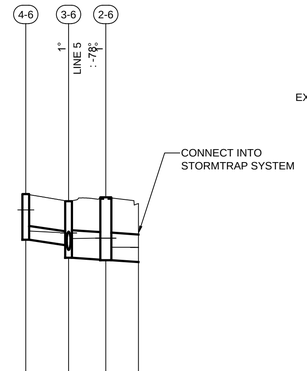


| | | | |
|---|---|---|---|
| DISCHARGE (L/s) | 293 | 1067 | 1067 |
| CAPACITY (L/s) | | | |
| PIPE GRADE (%) | 2.5% | 1.0% | 1.0% |
| PIPE SIZE (mm) | 450 | 900 | 900 |
| PIPE CLASS | Concrete, Class 2 | | |
| DATUM (m) | 14.00 | | |
| SURFACE LEVEL | 25.74 | 25.50 / 25.63 | 25.42 |
| HYDRAULIC GRADE LINE | 25.22 | 24.53 / 24.47 / 24.29 | 24.00 / 24.00 |
| INVERT LEVEL | 24.25 | 24.07 / 23.66 | 23.60 / 23.58 / 23.53 |
| PIPE CHAINAGE | 0.00 | 6.99 / 13.06 | 18.40 |

LINE 6

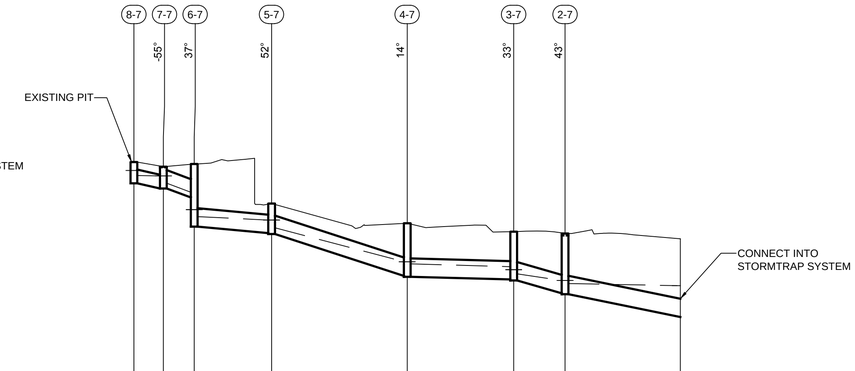


| | | | | | | | |
|---|---|---|---|---|---|---|---|
| DISCHARGE (L/s) | 137 | 285 | 411 | 412 | 406 | 406 | 404 |
| CAPACITY (L/s) | | | | | | | |
| PIPE GRADE (%) | 3.5% | 5.8% | 1.7% | 6.2% | 0.5% | 5.0% | 3.9% |
| PIPE SIZE (mm) | 450 | 600 | 600 | 600 | 600 | 600 | 600 |
| PIPE CLASS | Concrete, Class 2 | | | | Concrete, Class 2 | | |
| DATUM (m) | 16.00 | | | | | | |
| SURFACE LEVEL | 28.78 | 28.63 / 28.72 | 27.43 | 26.78 | 26.51 | 26.45 | 26.28 |
| HYDRAULIC GRADE LINE | 28.51 | 28.34 / 28.33 / 28.00 / 27.23 / 27.00 | 26.89 / 26.64 | 25.53 / 25.46 | 25.37 / 25.27 | 25.13 / 24.92 | 24.82 / 24.75 |
| INVERT LEVEL | 28.09 | 27.92 / 27.63 / 26.68 | 26.47 / 26.44 | 25.07 / 25.04 | 24.95 / 24.92 | 24.50 | 24.47 / 23.75 |
| PIPE CHAINAGE | 0.00 | 4.81 / 9.84 | 22.47 | 44.61 | 61.99 | 70.38 | 89.18 |

LINE 7

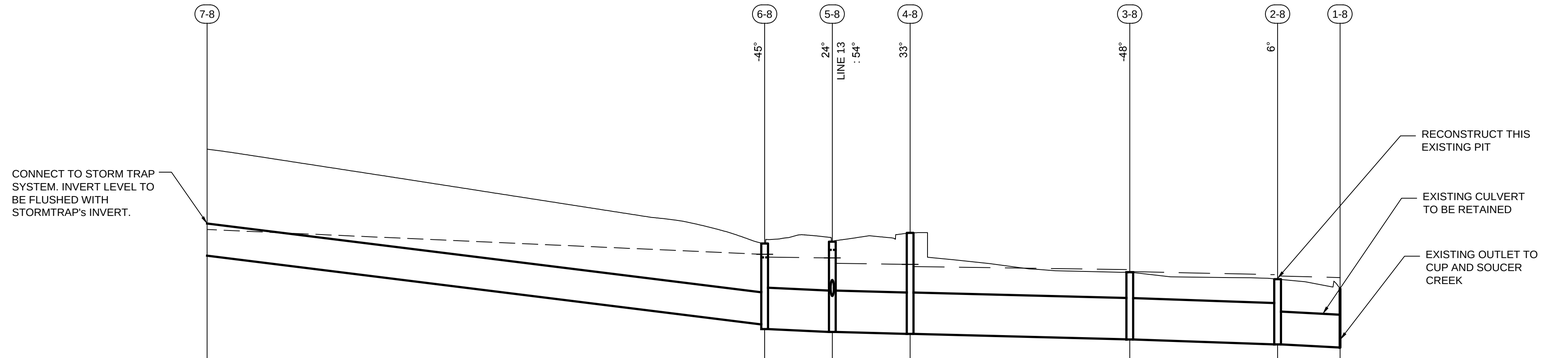


| | | | | | | |
|---|---|---|---|---|---|---|
| DISCHARGE (L/s) | 2960 | 2976 | 3169 | 3169 | 3169 | 3169 |
| CAPACITY (L/s) | | | | | | |
| PIPE GRADE (%) | 2.5% | 0.8% | 0.5% | 0.5% | 0.7% | 1.0% |
| PIPE SIZE (mm) | 1050 | 1350 | 1350 | 1350 | 1350 | 1450x1070 |
| PIPE CLASS | Concrete, Class 2 | Concrete, Class 2 | | | Concrete, Class 2 | Box Culverts |
| DATUM (m) | 12.00 | | | | | |
| SURFACE LEVEL | 25.19 | 22.11 | 22.17 | 22.46 | 21.18 | 20.95 / 20.64 |
| HYDRAULIC GRADE LINE | 23.83 / 22.57 | 21.76 / 21.67 | 21.64 / 21.47 | 21.43 / 21.36 | 21.26 / 21.19 | 21.09 / 21.05 / 21.00 |
| INVERT LEVEL | 21.70 | 19.47 / 19.32 | 19.23 | 19.16 | 18.98 | 18.82 / 18.72 |
| PIPE CHAINAGE | 0.00 | 91.02 | 102.05 | 114.75 | 150.60 | 174.75 / 184.94 |

LINE 8

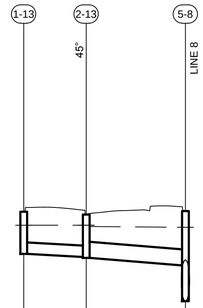


| | | |
|---|---|---|
| DISCHARGE (L/s) | 43 | 284 |
| CAPACITY (L/s) | | |
| PIPE GRADE (%) | 1.0% | 1.5% |
| PIPE SIZE (mm) | 375 | 525 |
| PIPE CLASS | | Concrete, Class 2 |
| DATUM (m) | 11.00 | |
| SURFACE LEVEL | 22.15 | 22.06 / 22.17 |
| HYDRAULIC GRADE LINE | 21.71 | 21.71 / 21.66 / 21.64 / 21.47 |
| INVERT LEVEL | 20.77 | 20.67 / 20.64 / 20.40 / 19.23 |
| PIPE CHAINAGE | 0.00 | 10.20 / 26.39 |

LINE 13

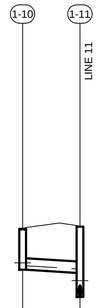


| | | |
|---|---|---|
| DISCHARGE (L/s) | 51 | |
| CAPACITY (L/s) | | |
| PIPE GRADE (%) | 1.1% | |
| PIPE SIZE (mm) | 375 | |
| PIPE CLASS | Concrete Class 2 | |
| DATUM (m) | 12.00 | |
| SURFACE LEVEL | 22.59 | 22.66 |
| HYDRAULIC GRADE LINE | 21.48 | 21.39 / 21.28 / 20.90 / 20.86 |
| INVERT LEVEL | 21.26 | 21.15 / 20.37 |
| PIPE CHAINAGE | 0.00 | 9.36 |

LINE 10

FOR INFORMATION ONLY

1:100 @ A1

1:500 @ A1

australand

LaSalle Investment Management

DIAL 1100 BEFORE YOU DIG

Project: STORMWATER LONG SECTIONS SHEET 1 OF 4
(Q10)
CLEMTON PARK VILLAGE
LOT 1 D.P.721721 & LOT A D.P.431356 60 CHARLOTTE STREET, CAMPSIE

Principal: AUSTRALAND & LASALLE

| | | | |
|---|---|---|---|
| Scale 1:100, 1:500 | Date 27.06.12 | Council Ref. MP 08_00087, MP 07_0106 | |
| | Datum A.H.D. | L.G.A. CANTERBURY | |
| Calc's M.V. | Drawn. M.V. | Proj.Man. A.C. | Client Ref: |

CRAIG & RHODES


ABN 77 050 209 991
Level 4, Suite 400
16-18 Cambridge St
EPPING NSW 2121
PO Box 233
EPPING NSW 1710

ACN 050 209 991
DX 4408 EPPING
Tel. 9869-1855
Fax. 9869-2341
reception@crhodes.com.au
www.craigandrhodes.com.au


© Craig & Rhodes

ISO 9001 Approved Company

Our Ref. 048-11

Dwg File Ref. [Rev] - Sheet Ref.

048-11C_E401-408 [02] - 402