PRELIMINARY HAZARD ANALYSIS, MODIFICATIONS TO THE EXISTING ETHANOL DISTILLERY AND STARCH OPERATIONS, SECOND BEVERAGE GRADE ETHANOL PLANT, SHOALHAVEN STARCHES, BOMADERRY, NSW CONSENT NUMBER: MP 06_0228 MOD 19

Prepared by: Dean Shewring

2 September 2020

Pinnacle Risk Management Pty Limited
ABN 83 098 666 703

PO Box 5024 Elanora Heights
NSW Australia 2101
Telephone: (02) 9913 7284
Facsimile: (02) 9913 7930

Preliminary Hazard Analysis, Shoalhaven Starches, Second Beverage Grade Ethanol Plant

Disclaimer

This report was prepared by Pinnacle Risk Management Pty Limited (Pinnacle Risk Management) as an account of work for Shoalhaven Starches. The material in it reflects Pinnacle Risk Management's best judgement in the light of the information available to it at the time of preparation. However, as Pinnacle Risk Management cannot control the conditions under which this report may be used, Pinnacle Risk Management will not be responsible for damages of any nature resulting from use of or reliance upon this report. Pinnacle Risk Management's responsibility for advice given is subject to the terms of engagement with Shoalhaven Starches.

Rev	Date	Description	Reviewed By
A	6/7/20	Draft for Comment	Shoalhaven Starches
B	15/8/20	Initial Comments Included and Silos	Shoalhaven Starches
C	24/8/20	Cooling Towers Added	Shoalhaven Starches
D	2/9/20	Isotainers Modification Included	Shoalhaven Starches

Contents

EXECUTIVE SUMMARY 6

GLOSSARY 9

1 INTRODUCTION 10

1.1 Background 10

1.2 Objectives 12

1.3 Scope 12

1.4 Methodology 12

2 SITE DESCRIPTION 13

3 PROCESS DESCRIPTION 16

3.1 Gas-Fired Boiler 16

3.2 Ethanol Storage Tanks and Isotainer Storage Area 19

3.3 Hand Sanitiser Process 22

3.4 Existing (First) Beverage Grade Ethanol Plant 24

3.5 Proposed (Second) Beverage Grade Ethanol Plant 26

3.6 Evaporator 31

3.7 Starch Modifications 31

4 HAZARD IDENTIFICATION 34

4.1 Hazardous Materials 34

4.2 Potential Hazardous Incidents Review 38

5 RISK ANALYSIS 53

5.1 Pool Fire Incidents 55

5.2 Jet Fires 61

5.3 Flash Fires and Vapour Explosions 62

5.3.1 Flash Fires and Vapour Explosions - Distilleries 62

5.3.2 Vapour Explosions due to Tank Overfills 65

5.4 Natural Gas and Biogas Releases – Fires and Explosions..... 67

5.5 Propagation and Cumulative Risk 70

5.6 Societal Risk 72

5.7 Risk to the Biophysical Environment 72

6 CONCLUSION AND RECOMMENDATIONS..... 73

7 APPENDIX A – 2017 DISTILLERY PROCESS FLOW DIAGRAM..... 75

8 APPENDIX B - 2020 DISTILLERY PROCESS FLOW DIAGRAM..... 77

9 APPENDIX C - RADIANT HEAT CONTOURS 80

10 APPENDIX D - METEOROLOGICAL DATA 91

11 APPENDIX E – RISK ANALYSIS 93

12 REFERENCES 95

LIST OF FIGURES

Figure 1 - Site Locality Plan 14

Figure 2 - Site Layout 15

Figure 3 – Boiler Process Flow Diagram..... 18

Figure 4 – Additional Ethanol Tanks Process Flow Diagram..... 21

Figure 5 – Hand Sanitiser Process Schematic..... 23

Figure 6 – Starch Modifications..... 33

LIST OF TABLES

Table 1 – Hazard Identification Word Diagram 39

Table 2 - Risk Criteria, New Plants 54

Table 3 – Fire Scenarios Calculation Data and Results 57

Table 4 - Radiant Heat Impact 59

Table 5 – Layout Considerations – Tolerable Radiant Heat Levels 59

Table 6 – Probability of Fatality from Radiant Heat 60

Table 7 – Jet Fires 62

Table 8 – 50 mm Hole Vapour Releases to LEL 63

Table 9 – Flash Fires from Instantaneous Releases 64

Table 10 – Natural Gas Jet Fires 67

Table 11 – Effects of Explosion Overpressure 67

Table 12 - Natural Gas Vapour Cloud Explosions and Flash Fires 68

Table 13 – Piping Failure Frequencies 69

Table 14 – Gas Ignition Probabilities 69

Table 15 – Hazardous Event Propagation Summary 70

EXECUTIVE SUMMARY

The Shoalhaven Starches factory located on Bolong Road, Bomaderry, produces a range of products for the food, beverage, confectionary, paper and motor transport industries including starch, gluten, glucose and ethanol.

To increase the proportion of beverage grade ethanol production on site, Shoalhaven Starches propose to undertake the following modifications:

- The installation of distillation columns and associated processing equipment immediately to the west of the existing Beverage Grade Ethanol Plant. The proposed plant and equipment are of similar design, size and operation to the existing Beverage Grade Ethanol modification approved under Mod 12;
- The distillery modification in the proposed location will require a boundary adjustment adjacent to Bolong Road;
- Additional cooling towers;
- An additional three ethanol storage tanks within the existing ethanol day tank storage area;
- The construction of an additional ethanol loadout facility immediately to the east of the ethanol day tanks storage area; and
- The relocation of the existing ethanol distillery control room from its current position adjacent the existing ethanol plant to the old fire pump station building which is located adjacent to the Bolong Road frontage of the site. This use was originally approved as part of Mod 12.

In addition to the second beverage grade ethanol plant, modifications to the starch processing facilities are proposed. These modifications include new tanks, silos and a “cross-linked” modified starch process.

As part of the project requirements, a Preliminary Hazard Analysis (PHA) is required. This PHA is an update of the previous ethanol facility PHA as this allows ready assessment of propagation risks within the distillery.

The risks associated with the proposed modifications at the Shoalhaven Starches Bomaderry site have been assessed and compared against the DoP risk criteria.

The results are as follows and show compliance with all risk criteria.

Description	Risk Criteria	Risk Acceptable?
Fatality risk to sensitive uses, including hospitals, schools, aged care	0.5 x 10^{-6} per year	Yes
Fatality risk to residential and hotels	1 x 10^{-6} per year	Yes
Fatality risk to commercial areas, including offices, retail centres, warehouses	5 x 10^{-6} per year	Yes
Fatality risk to sporting complexes and active open spaces	10 x 10^{-6} per year	Yes
Fatality risk to be contained within the boundary of an industrial site	50 x 10^{-6} per year	Yes
Injury risk – incident heat flux radiation at residential areas should not exceed 4.7 kW/m^2 at frequencies of more than 50 chances in a million per year or incident explosion overpressure at residential areas should not exceed 7 kPa at frequencies of more than 50 chances in a million per year	50 x 10^{-6} per year	Yes
Toxic exposure - Toxic concentrations in residential areas which would be seriously injurious to sensitive members of the community following a relatively short period of exposure	10 x 10^{-6} per year	Yes
Toxic exposure - Toxic concentrations in residential areas which should cause irritation to eyes or throat, coughing or other acute physiological responses in sensitive members of the community	50 x 10^{-6} per year	Yes
Propagation due to Fire and Explosion – exceed radiant heat levels of 23 kW/m^2 or explosion overpressures of 14 kPa in adjacent industrial facilities	50 x 10^{-6} per year	Yes

Societal risk, area cumulative risk and environmental risk is also concluded to be acceptable.

The primary reasons for the low risk levels from the modifications are that significant levels of radiant heat from potential fires are contained on-site and the likelihood of catastrophic equipment failures leading to off-site impact from flash fires is acceptably low.

Based on the analysis in this PHA, the following recommendations are made:

1. Provide leak detection in the proposed pump bund with an alarm in the control room.

2. Provide fire detection in the proposed pump bund that automatically initiates a deluge system.

3. Ensure that the fire water containment systems are adequate to contain the design quantities of contaminated fire water for the new processes, in particular, the new beverage grade distillery and the new road tanker loadout.

Note: As this PHA is an update of the beverage grade distillery Final Hazard Analysis then any new or modified text is shown in blue text. This is to simplify the assessment of the report for the reader.

GLOSSARY

ALARP	As Low As Reasonably Practicable
API	American Petroleum Institute
AS	Australian Standard
DG	Dangerous Good
DoP	NSW Department of Planning
ENA	Extra Neutral Alcohol
FD	Forced Draught
HAZAN	Hazard Analysis
HIPAP	Hazardous Industry Planning Advisory Paper
HSE UK	Health and Safety Executive United Kingdom
IBC	Intermediate Bulk Container
IDLH	Immediately Dangerous to Life and Health
ISO	International Standards Organisation
LEL	Lower Explosive Limit
PHA	Preliminary Hazard Analysis
pmpy	Per Million Per Year
QRA	Quantitative Risk Assessment
ROSOV	Remotely Operated Shut-off Valve
SEP	Surface Emissive Power
STEL	Short-Term Exposure Limit
TLV	Threshold Limit Value
TWA	Time Weighted Average
UEL	Upper Explosive Limit
WWTP	Waste Water Treatment Plant

REPORT

1 INTRODUCTION

1.1 BACKGROUND

Shoalhaven Starches is a member of the Manildra Group of companies. The Manildra Group is a wholly Australian owned business and the largest processor of wheat in Australia. It manufactures a wide range of wheat-based products for food and industrial markets both locally and internationally.

The Shoalhaven Starches factory located on Bolong Road, Bomaderry, produces a range of products for the food, beverage, confectionary, paper and motor transport industries including starch, gluten, glucose and ethanol.

In 2017, Shoalhaven Starches modified the existing Ethanol Distillery Plant to:

- Increase the proportion of beverage grade ethanol produced on the site to 110 ML/year. This modification included:
  - A new beverage grade ethanol plant;
  - Additional ethanol storage tanks (x5);
  - An emergency Isocontainer (for ethanol) storage area (located to the east of the relocated evaporator – see below);
  - Cooling water towers;
  - Electrical substation; and
  - Pipebridge (for fluids transfers to/from the additional syrup tank – see below); and
- Modify the type and location of the Water Balance Recovery Evaporator that was previously approved under MOD 2 adjacent to the Ethanol Plant.

In early July 2020, Shoalhaven Starches proposed to install two additional ethanol tanks, a hand sanitiser plant and relocate a boiler from a previously approved location. A Preliminary Hazard Analysis (PHA) (Ref 1) has been submitted to the Department of Planning, Industry and Environment for this work.

Shoalhaven Starches now intend to undertake modifications to the existing ethanol facility to increase the proportion of beverage grade ethanol that is able to be produced on the site. The modification will enable increased flexibility in terms of the range of types of ethanol produced at the site (i.e. between fuel, industrial, pharmaceutical and beverage grade ethanol) to meet market demands.

The modification proposal will enable an increase in production of up to 100 ML of beverage grade ethanol per annum. The proposal will not, however, involve an increase in the overall ethanol production at the site above the current approved 300 ML per year. With the current capacity of 110 ML of beverage grade ethanol, the proposal will allow production of up to 210 ML of beverage grade ethanol per annum to meet increased market demand for higher quality ethanol products.

To increase the proportion of beverage grade ethanol production on site, Shoalhaven Starches propose to undertake the following modifications:

- The installation of distillation columns and associated processing equipment immediately to the west of the existing Beverage Grade Ethanol Plant. The proposed plant and equipment are of similar design, size and operation to the existing Beverage Grade Ethanol modification approved under Mod 12;
- The distillery modification in the proposed location will require a boundary adjustment adjacent to Bolong Road;
- Additional cooling towers;
- An additional three ethanol storage tanks within the existing ethanol day tank storage area;
- The construction of an additional ethanol loadout facility immediately to the east of the ethanol day tanks storage area; and
- The relocation of the existing ethanol distillery control room from its current position adjacent the existing ethanol plant to the old fire pump station building which is located adjacent to the Bolong Road frontage of the site. This use was originally approved as part of Mod 12.

In addition to the second beverage grade ethanol plant, modifications to the starch processing facilities are proposed. These modifications include new tanks, silos and a “cross-linked” modified starch process.

As part of the project requirements, a Preliminary Hazard Analysis (PHA) is required.

Shoalhaven Starches requested that Pinnacle Risk Management prepare the PHA for the proposed modifications. This PHA has been prepared in accordance with the guidelines published by the Department of Planning (DoP) Hazardous Industry Planning Advisory Paper (HIPAP) No 6 (Ref 2) and is an update of the July 2020 PHA (Ref 1) for the two additional ethanol storage tanks, the hand sanitiser plant and the relocated boiler. All changes are shown in blue text to assist the reader identify changes to the previous PHA version.

1.2 OBJECTIVES

The main aims of this PHA study are to:

- Identify the credible, potential hazardous events associated with the proposed modifications, i.e. the second beverage grade ethanol plant, the new starch operations and the associated new plant and equipment;
- Evaluate the level of risk associated with the identified potential hazardous events to surrounding land users and compare the calculated risk levels with the risk criteria published by the DoP in HIPAP No 4 (Ref 3);
- Evaluate the potential for propagation events;
- Review the adequacy of the proposed safeguards to prevent and mitigate the potential hazardous events; and
- Where necessary, submit recommendations to Shoalhaven Starches to ensure that the proposed modifications are operated and maintained at acceptable levels of safety and effective safety management systems are used.

1.3 SCOPE

This PHA assesses the credible, potential hazardous events and corresponding risks associated with the Shoalhaven Starches proposed modifications to the ethanol and starch facilities with the potential for off-site impacts.

As the proposal changes the amounts of the different types of ethanol produced at the site but not the net volume then there is no net change in transport from the site. Therefore, transport is not assessed.

1.4 METHODOLOGY

In accordance with the approach recommended by the DoP in HIPAP 6 (Ref 2) the underlying methodology of the PHA is risk-based, that is, the risk of a particular potentially hazardous event is assessed as the outcome of its consequences and likelihood.

The PHA has been conducted as follows:

- Initially, the proposed modifications and their locations were reviewed to identify credible, potential hazardous events, their causes and consequences. Proposed safeguards were also included in this review;
- As the potential hazardous events are located at a significant distance from other sensitive land users, the consequences of each potential hazardous event were estimated to determine if there are any possible unacceptable off-site impacts;

- Included in the analysis is the risk of propagation between the proposed equipment and the adjacent processes; and
- If adverse off-site impacts could occur, assess the risk levels to check if they are within the criteria in HIPAP 4 (Ref 3).

2 SITE DESCRIPTION

The Shoalhaven Starches factory site is situated on various allotments of land on Bolong Road, Bomaderry, within the City of Shoalhaven (see Figure 1). The factory site, which is located on the south side of Bolong Road on the northern bank of the Shoalhaven River, has an area of approximately 12.5 hectares.

The town of Bomaderry is located approximately 0.5 km to the west of the factory site and the Nowra urban area is situated 2.0 km to the south west of the site. The "Riverview Road" area of the Nowra Township is situated approximately 600 metres immediately opposite the factory site across the Shoalhaven River.

The village of Terara is situated approximately 1.5 kilometres to the south east of the site, across the Shoalhaven River. Pig Island is situated between the factory site and the village of Terara and is currently used for cattle grazing.

There are a number of industrial land uses, which have developed on the strip of land between Bolong Road and the Shoalhaven River. Industrial activities include a metal fabrication factory, the Shoalhaven Starches site, Shoalhaven Dairy Co-op (formerly Australian Co-operative Foods Ltd – now owned by the Manildra Group) and the Shoalhaven Paper Mill (also now owned by the Manildra Group). The industrial area is serviced by a privately-owned railway spur line that runs from just north of the Nowra-Bomaderry station via the starch plant and the former Dairy Co-op site to the Paper Mill.

The Company also has an Environmental Farm of approximately 1,000 hectares located on the northern side of Bolong Road. This area is cleared grazing land and contains spray irrigation lines and wet weather storage ponds (total capacity 925 Mega litres). There are at present six wet weather storage ponds on the farm that form part of the waste water management system for the factory. A seventh pond approved in 2002 was converted into the biological section of the new wastewater treatment plant has now been commissioned.

The Environmental Farm covers a broad area of the northern floodplain of the Shoalhaven River, stretching from Bolong Road in the south towards Jaspers Brush in the north. Apart from its use as the Environmental Farm, this broad floodplain area is mainly used for grazing (cattle). The area comprises mainly large rural properties with isolated dwellings although there is a clustering of rural residential development along Jennings Lane (approximately 1 kilometre from the site), Back Forest Road (approximately 500 metres to 1.2 kilometres to the west) and Jaspers Brush Road (approximately 1.2 kilometres to the north).

Figure 1 - Site Locality Plan

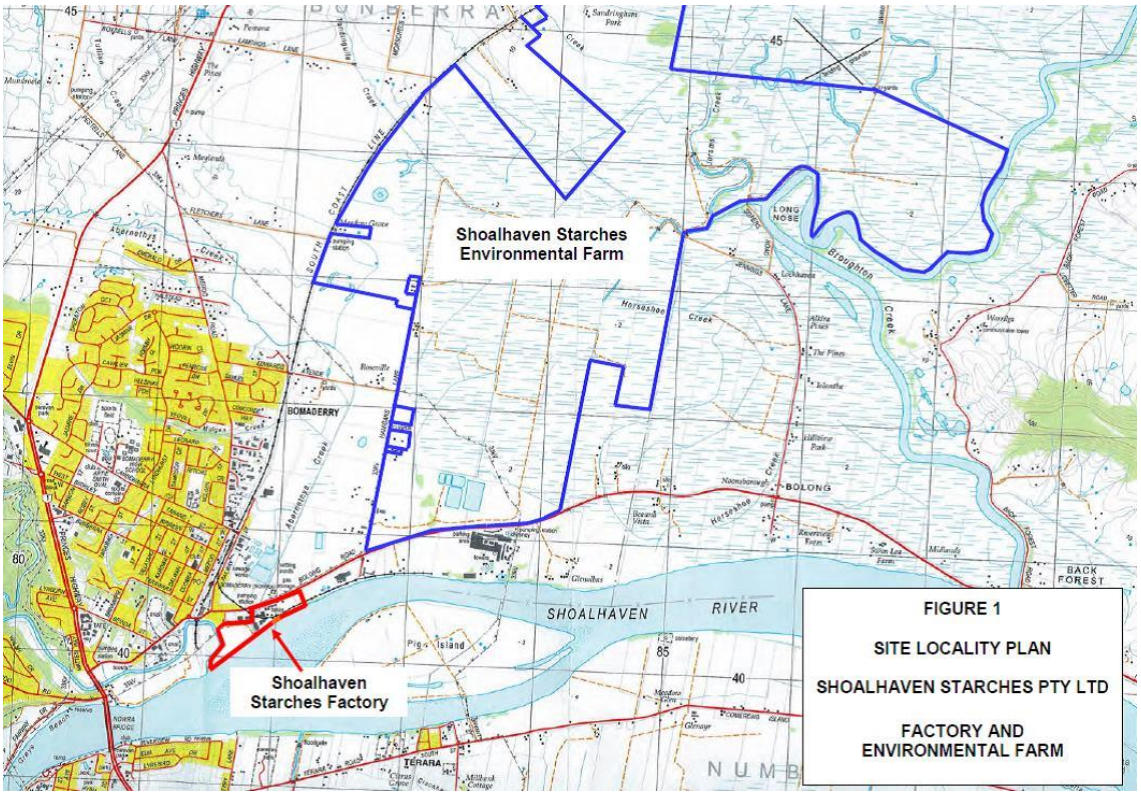

Security of the site is achieved by a number of means. This includes site personnel and security patrols by an external security company (this includes weekends and night patrols). The site operates 7 days per week (24 hours per day). Also, the site is fully fenced and non-operating gates are locked. Security cameras are installed for staff to view visitors and site activities.

There are approximately 126 people on site during Monday to Fridays 8 am to 5 pm and 88 people on site at other times.

The main natural hazard for the site is flooding. No other significant external events are considered high risk for this site.

A layout drawing showing the proposed location of the modifications is shown in Figure 2.

Figure 2 - Site Layout

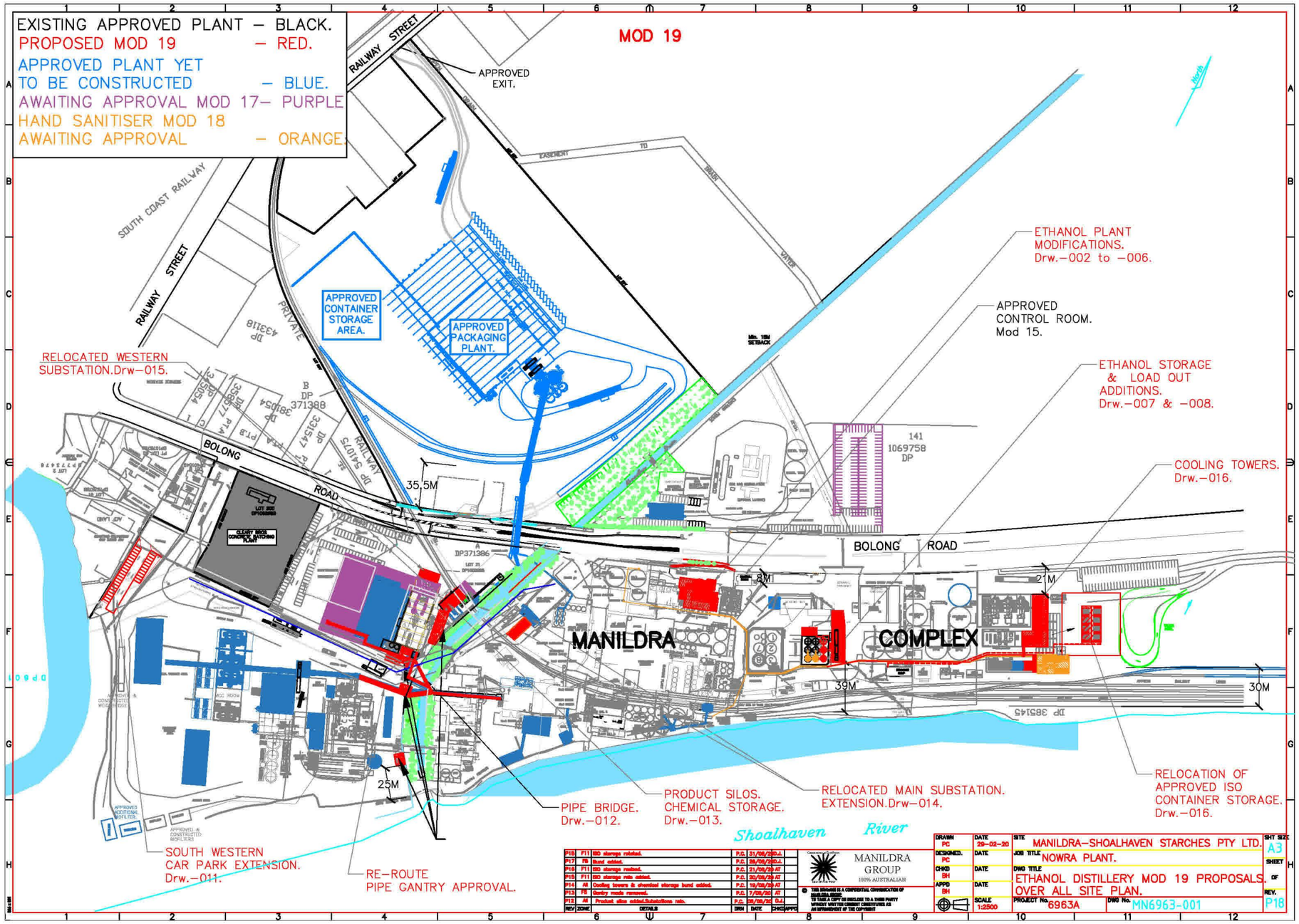

3 PROCESS DESCRIPTION

3.1 GAS-FIRED BOILER

There are no changes to the following description as a result of the second beverage grade distillery.

It is proposed to install an additional gas-fired boiler (Boiler 8) as shown in Figure 2. The boiler will increase steam production at the plant by 45 tonnes per hour. The supply pressure and temperature will be 12 bar and 192°C, respectively. The boiler will be a 30 MW gas-fired D type (i.e. vertical steam drum) water tube boiler.

The boiler will operate in a continuous state allowing for more stable steam production at the plant in the case that other boilers are down for maintenance or troubleshooting. The boiler will be a typical design involving a steam drum and a mud drum.

Water will be treated in water softeners and stored in a feedwater tank. It will then be pumped into the boiler to maintain level. The boiler design will include provision for blowdown to prevent high conductivity in the boiler water. The blowdown water will be treated at the Manildra waste water treatment plant.

Natural gas and biogas are the fuel sources for the furnace. Natural gas is already piped throughout the site. Biogas is available from the Manildra waste water treatment plant and is also already piped throughout the site. The fuel gas train to the boiler will be compliant with the relevant standards, e.g. AS3814, Industrial and commercial gas-fired appliances.

The gas supply pressure is 210 kPa and will be reduced at the boiler valve train. The gas flow is approximately 3,450 m^3/hr.

A forced-draught fan will supply air to the furnace. The flue gas will be vented to atmosphere via a stack (approximately 24 m high).

The boiler will be installed in an open area, i.e. a well-ventilated area. The boiler is intended to have a similar process and inherent safe design as per the three existing gas boilers at the site.

Boiler high pressure is to be protected with the control system and relief valves. Boiler low and high level and potential furnace explosion are to be protected via a boiler management system (hard-wired). This is to include an air purge prior to ignition of the burners. The control system will be compliant with AS2593, Boilers - Safety management and supervision systems, and the Australian Gas Association codes.

The boiler and associated piping and vessels will be constructed from carbon steel. All pipework and associated equipment will be designed to AS4041 or an equivalent standard.

As the steam temperature is high and therefore a burn hazard if contact is made with hot surfaces then insulation will be installed to mitigate the risk of injury.

An additional fire hydrant will be installed at the proposed location as well as additional fire extinguishers. The boiler is to be located in a contained area. Any collected liquids will be disposed via the Manildra waste water treatment plant.

A process flow diagram for the boiler is shown in Figure 3.

Figure 3 – Boiler Process Flow Diagram

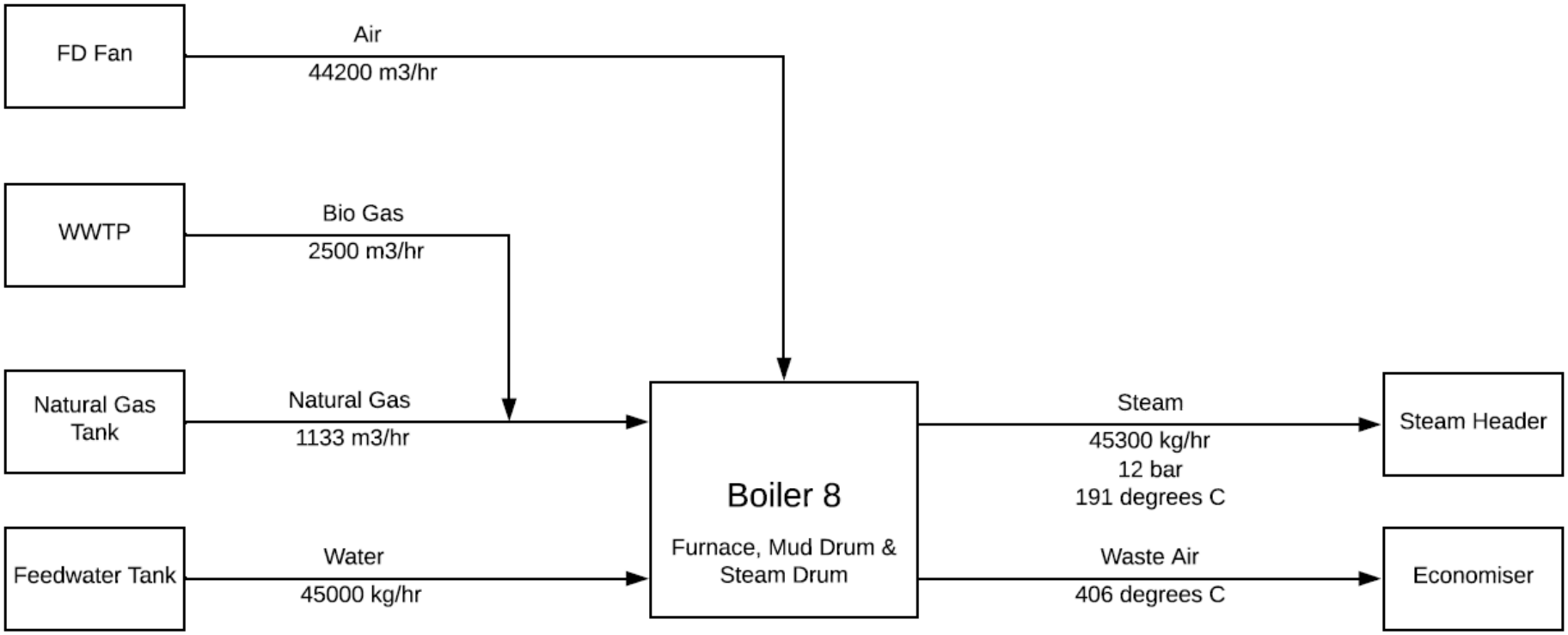

3.2 ETHANOL STORAGE TANKS AND ISOTAINER STORAGE AREA

Prior to the first beverage grade ethanol plant project (2017), there were seven ethanol storage tanks in the ethanol storage area (Tanks 1 to 7) and two ethanol tanks in the ethanol day tank area. The latter two tanks were removed as part of this project and four new tanks were installed. An additional tank was also installed in the ethanol storage area (Tank 8). The new tanks are constructed from stainless steel and are fixed roof.

The capacity of Tank 8 is 777 m^3. It is 7.46 m diameter and 18 m high. The four smaller tanks are 240 m^3 each. They are 4.5 m diameter and 14.7 m high.

The four smaller tanks operate as day tanks, i.e. any off-specification ethanol product from the first beverage grade ethanol plant is diverted to these tanks and then to other existing tanks or processes (rather than flow to the larger tank which contains the on-specification product ethanol for the customers).

The product beverage grade ethanol is pumped into road tankers or ISO containers at the road tanker transfer area for delivery to the customers. Two dedicated parallel loading arms were installed for the beverage grade ethanol. Road tanker overfill is protected by the scully system and a modified hatch for the Isocontainers (these do not have scully leads).

In early July 2020, it was proposed to install two additional hand sanitiser ethanol tanks (Tanks 14 and 15) in the existing ethanol day tank bund that will increase the Extra Neutral Alcohol (ENA at 96.5% vol ethanol) storage on site. The tanks will be constructed from 304L stainless steel and are to be fixed roof. The two tanks will be 240 m^3 each, i.e. identical to the existing four tanks that are located in the same bunded area. Their diameter will be 4.5 m and they will be 14.7 m tall. The tanks will be designed to AS1692 or an equivalent standard.

These two tanks will operate as batching tanks in a similar way to the existing four tanks, i.e. any off-specification ethanol product from the plant is diverted to these tanks.

These two hand sanitiser tanks are intended to have a similar process and fire safety design as well as similar equipment to the four existing beverage grade ethanol day tanks. The plant that feeds these tanks is designed to produce 250 m^3/day so it will take approximately one day to fill each tank.

The ENA will be pumped to the tanks at approximately 35^oC although the temperature in the tanks may change with the ambient conditions if the ethanol is stored for extended periods. The tanks will be bottom-filled to avoid static generation. With the inclusion of nitrogen blanketing (explosion prevention control), the tanks will have a pressure slightly higher than atmospheric pressure although this will be less than the vent lifting pressure during steady state. The tanks will have a vacuum / vent relief device to avoid over-pressurising or pulling vacuum in the tank.

Tank overfill protection will include a level transmitter and high level trip.

The inclusion of these tanks should not increase the number of road vehicles to or from the facility. These tanks do not change the production rate of the beverage grade distillery although they allow for more ENA storage on the site for use in hand sanitiser products.

The tanks' systems will be designed to AS1940, the Australian Standard for the storage and handling of flammable and combustible liquids. The bund capacity has been checked and is 455 m^3. This is more than 110% of the largest tank volume (240 m^3). The tanks are not classified as a tank cluster as per AS1940 as the tanks are spaced apart by more than one-third of the tank diameter.

There are no new ethanol pumps as part of this modification. There will be some minor modifications to the road tanker gantry to accommodate the proposed steam and natural gas lines. These changes do not alter how transfers are performed at the gantry. A process flow diagram for the ethanol tanks is shown in Figure 4.

It is now proposed to install an additional three tanks in the ethanol day tank bund. These three tanks will be identical in size to the existing tanks, i.e. 240 m^3 each, 4.5 m diameter and 14.7 m high.

The additional three tanks will replicate the functionality of the existing tanks being, they will provide buffer storage of product to enable the quarantining of production for quality testing prior to release for transfer into the bulk Extra Neutral Alcohol (ENA) storage tank or to road tanker for despatch. Product that fails quality testing will be downgraded and transferred to existing industrial grade product storage tanks for despatch or further processing.

A new valve manifold and pumping station will be installed in a compound adjacent to the tank bund to route product into and out of the tanks. Three pumps will be used to either transfer product to either bulk storage or the two new loadout arms.

Therefore, assuming all proposed tanks are installed then there will be nine identical tanks within the ethanol day tank bund.

An emergency Isotainer storage area was approved in the MOD 12 submissions. Manildra now plan to relocate this approved storage area to accommodate the proposed additional cooling towers as follows:

- The emergency Isotainer storage area will hold no more than 900 m^3 of ethanol;
- The storage area will be bunded as per AS1940. To avoid any potential pooling of released ethanol, a drainage system will be included that will flow to an existing pit;
- Fire protection will be provided as per AS1940; and
- The Isotainers will be typically stacked, e.g. 2, 3 or 4 high depending on the equipment to be used.

Figure 4 – Additional Ethanol Tanks Process Flow Diagram

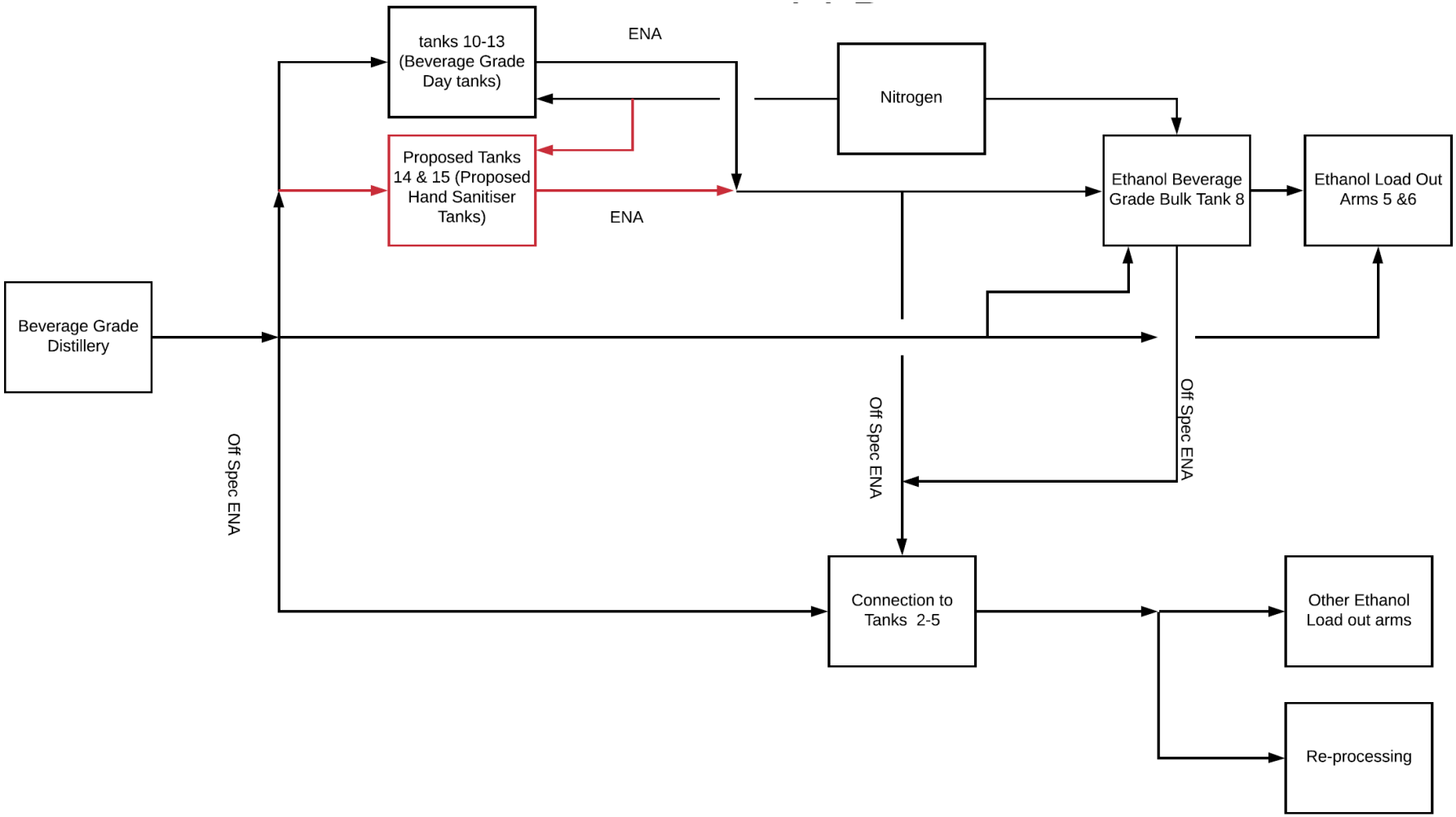

3.3 HAND SANITISER PROCESS

There are no changes to the following description as a result of the second beverage grade distillery.

Hand sanitiser is a blend of the following materials:

- Ethanol;
- Water;
- Glycerine; and
- Hydrogen peroxide.

The blending equipment is the former defatting equipment within the Defatting Plant Building (with modifications). This building (now the Hand Sanitiser Building) is located between the two main ethanol storage tanks' bunds.

A process schematic of the hand sanitiser blending operation is shown in Figure 5.

The ethanol and water (Reverse Osmosis product water) are piped to the hand sanitiser blending process. Glycerine (≥99.7%) and hydrogen peroxide (35%) are supplied in Intermediate Bulk Containers (IBCs) and pumped into the blending tanks using air-driven diaphragm pumps.

Due to low demand, there is only one hydrogen peroxide IBC at a time within the building and it is stored in its own bund. Similarly, there is only one glycerine IBC in the building at any one time.

When blending hand sanitiser, the first step is to nitrogen blanket Tanks 201 (the Mixing Tank) and 301 (the Final Product Tank). This is to lower the risk of explosions and fires. There is a low nitrogen pressure alarm and a low nitrogen pressure trip to ensure that adequate inerting is provided. In addition to the nitogen padding, explosion protection also includes a flame arrester in the pressure / vacuum valve vent line as well as equipment earthing.

During nitrogen purging, the operators measure the oxygen concentration in these vessels. Once the oxygen concentration is below 4 vol% then production can commence.

Water, glycerine and hydrogen peroxide are then pumped into the first tank, i.e. the Chemical Tank or Tk-101 (6 m^3). The quantities are controlled via level. The water, glycerine and hydrogen peroxide are mixed (using a pumped recirculation loop) in Tk-101 and then transferred to Tk-201 (3.5 m^3) where the ethanol is added (again based on level).

Tk-201 (i.e. the Mixing Tank) has an internal mixer that is driven by an electric motor.

Figure 5 – Hand Sanitiser Process Schematic

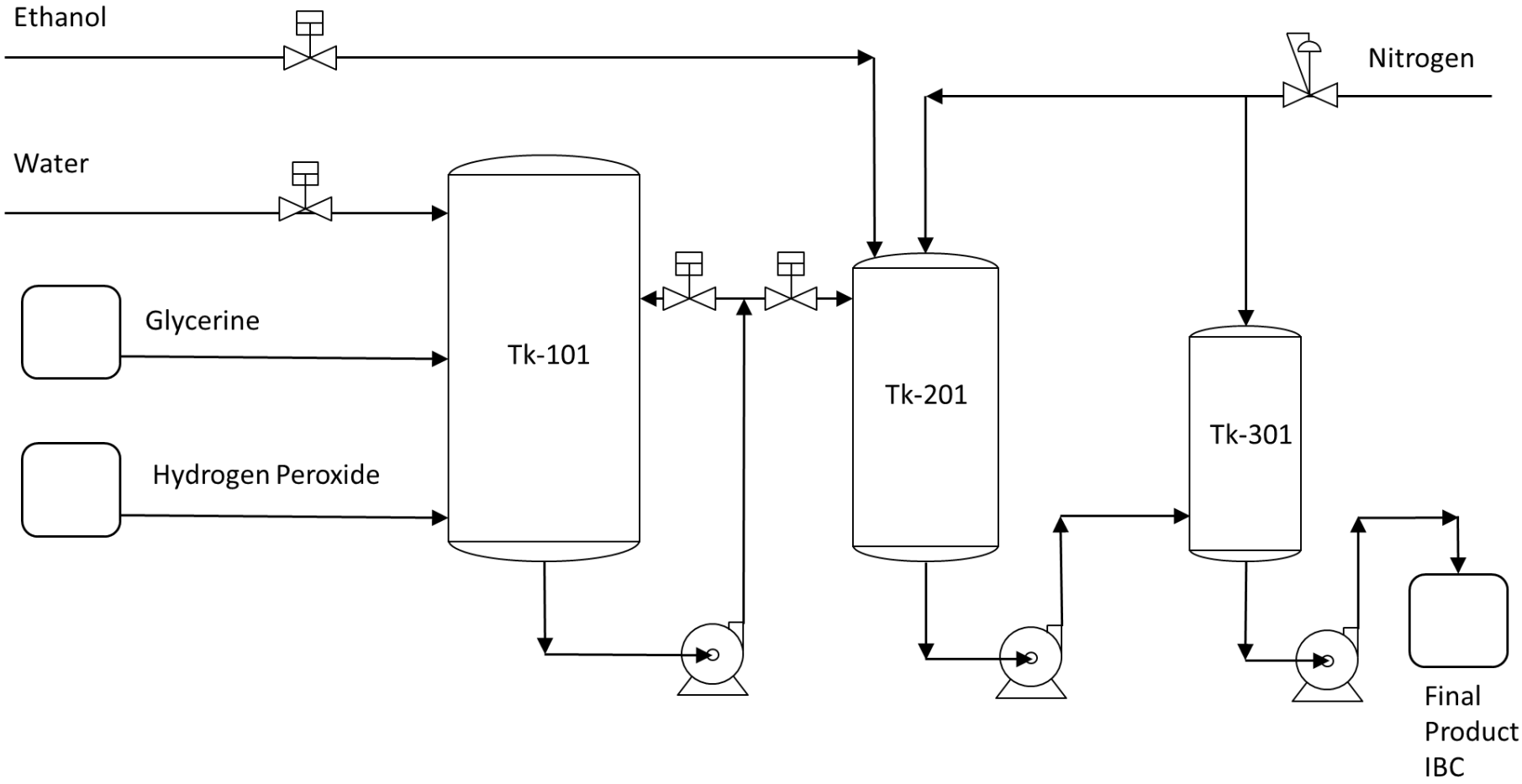

The Mixing Tank controls include deadman's spring return valves on all sample points and interlocks on actuated valves to prevent backflow (in addition to non-return valves).

When the blended chemicals are adequately mixed, they are transferred to the Final Product Tank (Tk-301). This tank has a capacity of 3 m^3. The product hand sanitiser can then be pumped (on-demand) to an IBC (via a flow meter to help prevent overfilling the IBC). There is also a watch-dog timer on the final product pump operation to lower the likelihood of overfilling the product IBC. The product hand sanitiser is a flammable liquid.

In the event of loss of containment of flammable liquid, adequate ventilation is provided by building extraction fans that are interlocked with plant operation.

There is an existing fire water deluge system within the building (designed to 10 mm/min.m^2 water density) that is regularly tested. This system covers both the floor and mezzanine areas. Two forms of fire detection are installed in this building, i.e. hydraulically operated thermal sprinkler heads and Infra-Red Detectors (dual). Operation of either detection system releases pressure off the deluge valve (via solenoid valves) and therefore activates the fire water system. A manual release valve is also provided (at the mezzanine level) which has the same effect. The fire water supply solenoid valves are connected (interfaced) to a separate Sub-Fire Indicator Panel at the rail head and interfaced with the whole site Emergency Warning and Intercommunication System.

Hazardous area zoning has been performed and all instruments and electrics are compliant.

For liquid effluent (if any) within the building, there is a concrete bund 200 mm high inside the building with coving to the steel walls. Once this height is reached, any liquid will either flow outside the front of the building where it will be contained by a ramp approximately 300 mm above the bund wall and/or escape underneath the personnel access door at the rear (north-side) of the building. There are air pumps connected to a sump which automatically pump-out to the adjacent ethanol storage bund.

3.4 EXISTING (FIRST) BEVERAGE GRADE ETHANOL PLANT

There are no changes to the following description as a result of the second beverage grade distillery.

The production of beverage grade ethanol (96.5 vol%) from raw ethanol (92 vol%) is performed in a rectification process including the following steps. The plant is designed to produce 250 m^3/day of beverage grade ethanol. A process flow diagram is supplied in Appendix A.

First Step: Purification Performed in the Hydroselection Column D530.

The raw ethanol at 80°C is transferred from a buffer tank (50 m^3) to the hydroselection column, i.e. a distillation column, via a vessel containing copper

chips. The copper chips remove impurities such as trace levels of mercaptans. Raw ethanol contains other impurities in low concentrations such esters and aldehydes whose relative volatilities in ethanol increase when water is added. These are separated from the ethanol in the hydroselection column by having a high flow of water to the top of the column. The impurities are carried out the top of the column with the ethanol vapours and condensed. An impurities bleed stream is transferred to the existing dehydration unit (molecular sieves) through vessel R543 and pump P543. The hydroselection column bottoms contains approximately 10-12% ethanol by volume and importantly, the majority of impurities have been removed.

The hydroselection column operates at vacuum conditions (0.6 bara).

Second Step: Rectification Performed in Two Rectifications Columns D540 and D541.

Purified ethanol at 10-12% from the hydroselection column feeds the two rectifications columns, i.e. D540 and D541, which operate in parallel. Approximately 70% of the flow enters D540 with the remainder entering D541. The main functions of the rectification columns are:

- To strip the 10-12% ethanol in the hydroselection column's bottoms stream to below 0.03% ethanol. This water stream is sent to the Manildra waste water treatment plant for processing;
- To concentrate the ethanol to obtain a concentration of at least 96.5 vol%; and
- To eliminate all of the residual heavy impurities.

D540 and D541 operate at different pressures to allow heat integration to be performed. For example, the overheads stream from D540 is at higher pressure and temperature than the lower pressure D541 column and hence is used in the reboiler for D541.

Some heads (impurities such as aldehydes and acetaldehydes) are concentrated on the top 3 or 4 trays of the two rectification columns. Therefore, a small bleed stream of heads is sent to the existing dehydration unit through vessel R543 and pump P543. The beverage grade ethanol stream is taken from trays 4 to 5 to avoid being off-specification in heads.

The 'low oils' (e.g. isoamylalcohol) or fusel oils are concentrated approximately 2 to 3 trays above the column feed nozzle. Therefore, a small bleed stream transfers the fusel oils to the existing decantor or to the existing dehydration unit through the vessel R543.

The 'high oils' (e.g. n-butanol, isobutanol and n-propanol) are concentrated on the trays above the low oils bleed take-off point. These high oils are taken from the rectification columns and also sent to the existing dehydration unit through the vessel R543 and its pump P543.

The operating pressures for the two rectification columns are:

- D540: 2.10 bara (i.e. above atmospheric pressure); and
- D541: 0.35 bara (i.e. at a partial vacuum).

The concentrated ethanol at the top of the columns D540 and D541 is at least 96.5 vol%.

Third Step: Refining Performed in the Refining Column D550

The ethanol from the two rectification columns D540 and D541 feeds the refining column D550.

The purpose of the refining column D550 is:

- To eliminate the last light impurities, i.e. mainly methanol remaining in the ethanol coming from the rectification columns; and
- To improve the sensor quality of the final ethanol.

The beverage grade ethanol is obtained at the bottom of the refining column D550 and is transferred to the ethanol storage tanks.

Effluent from the process flows to the Shoalhaven Starches waste water treatment plant for treatment.

The main materials of construction for the equipment items are stainless steel and copper.

For the vessels that vent to atmosphere, the streams flow through condensers, a washing column and then a scrubber. This is to avoid venting ethanol to atmosphere.

3.5 PROPOSED (SECOND) BEVERAGE GRADE ETHANOL PLANT

There are three stages within the existing industrial grade ethanol distillery (corresponding to the order of installation). These processes were installed prior to the installation of the first beverage grade distillery in 2017. Stage 1 will be demolished and the proposed second beverage grade distillery will be installed at the same location, i.e. immediately to the west of the existing control room.

The existing Stage 1 industrial grade facility is similar to the proposed second beverage grade facility, i.e. it involves the same feed (beer at 7 to 12% ethanol) and unit operations such as distillation columns (both vacuum and pressurised), vessels, heat exchangers and pumps. Essentially, this part of the project is replacing one ethanol purification process with another (the latter will produce the higher grade ethanol).

The proposed second beverage grade ethanol distillery will be designed to make up to 100 ML of beverage grade ethanol per annum at 96.5 vol% ethanol.

There will be no increase in overall ethanol production above the current approved 300 ML per year and no increase in waste-water generation is anticipated as a result of the modification (as the existing Stage 1 ethanol process will be demolished).

The production of beverage grade ethanol from beer at 7% to 12 % by volume alcohol coming from the wheat starch slurry fermentation will be performed in a distillation / rectification process that includes the following steps:

- Stripping, degassing and concentration to produce raw alcohol at 93 to 95% volume (performed in the column D510/D511/D520);
- Purification by the hydroselection column (D530);
- Rectification by the rectification column (D540);
- Refining by the refining column (D550); and
- Heads and Tails concentration in the Heads and Tails concentration column (D560). The D560 column will be also process the Heads and Tails produced by the existing (first) beverage grade distillery.

The production of beverage grade ethanol (96.5 vol%) from beer is performed in a rectification process including the following steps. The plant is designed to produce 250 m^3/day of beverage grade ethanol. A process flow diagram is supplied in Appendix B.

First Step: Degassing, Stripping and Concentration.

The beer at 7% - 12 % volume and 70°C from the fermentation unit feeds the first process.

The purpose of the combined degassing (D511), stripping (D510) and concentration (D520) column is:

- To eliminate the beer gas (e.g. air, carbon dioxide and sulphur dioxide) in the degassing column D511;
- To strip the alcohol in the beer from 7% to 12% volume to 0.03% volume in the stripping column D510; and
- To concentrate the alcohol from the stripping column to about 93 to 95 % volume in the concentration column D520.

All three sections of this combined column are operated at vacuum conditions.

The spent wash or thin stillage from the bottom of D510 is sent to the existing site stillage plant.

The alcoholic vapours at 93 to 95% vol coming from the top of the concentration column D520 are condensed in a plate condenser and a seal condenser. All the condensates are collected in the vessel R525 and then sent as reflux to the concentration column D520. A small portion of heads (light impurities like esters and aldehydes) from the reflux line is sent to the impurities extraction vessel R543. Other impurities, e.g. isoamylalcohol, n-butanol and iso-butanol) are also removed from selected trays in D520 and sent to R543.

The concentrated liquid alcohol at 93 to 95 %vol is extracted a few trays below the top of D520 and sent to the hydroselection column (D530).

If required to get a good quality product and to reduce the risks of copper corrosion, the pH may be adjusted to maintain it between 7.5 and 8.5. This pH adjustment is performed by injection of caustic soda (3 to 5 wt%) below the low oils extraction point on the concentration column D520.

When required, the relevant equipment is cleaned (Clean-In-Place). This requires a complete plant shutdown.

Second Step: Purification Performed in the Hydroselection Column D530.

The hydroselection column D530 operates similarly to the hydroselection column in the existing (first) beverage grade distillery.

The ethanol from D520 contains other impurities in low concentrations such esters and aldehydes whose relative volatilities in ethanol increase when water is added. These are separated from the ethanol in the hydroselection column by having a high flow of water to the top of the column. The impurities are carried out the top of the column with the ethanol vapours and condensed. An impurities bleed stream is transferred to vessel R543. The hydroselection column bottoms steam contains approximately 10 to 12% ethanol by volume and importantly, the majority of impurities have been removed. This stream is pumped to the rectification column D540.

The hydroselection column operates at vacuum conditions.

Third Step: Rectification Performed in the Rectification Column D540.

The rectification column D540 operates similarly to the rectification process in the existing (first) beverage grade distillery with the exception that the existing process has two columns operating in parallel.

Purified ethanol at 10 to 12% from the hydroselection column feeds the rectification column, i.e. D540. The main functions of the rectification column are:

- To strip the 10 to 12% ethanol in the hydroselection column's bottoms stream to below 0.03% ethanol. This water stream is sent to the Manildra waste water treatment plant for processing and also used internally within the process;

- To concentrate the ethanol to obtain a concentration of at least 96.5 vol%; and

- To eliminate all of the residual heavy impurities.

Some heads (impurities such as aldehydes and acetaldehydes) are concentrated at the top of the rectification column. Therefore, a small bleed stream of heads is sent to vessel R543. The beverage grade ethanol stream is taken from lower trays to avoid being off-specification in heads.

Along the column D540, extraction streams are made to extract low oils (e.g. isoamylalcohol or fusel oils), high oils ((e.g. n-butanol, isobutanol and n-propanol)) and very high oils. All of these extractions are sent to the impurities extraction collector vessel R543 prior feeding of the low-grade alcohol column D560.

D540 operates at 2.3 bara pressure.

Fourth Step: Refining Performed in the Refining Column D550.

The refining column D550 operates similarly to the refining column in the existing (first) beverage grade distillery, i.e. vacuum operation.

The ethanol from the rectification column D540 feeds the refining column D550.

The purpose of the refining column D550 is:

- To eliminate the last light impurities, i.e. mainly methanol remaining in the ethanol coming from the rectification columns; and

- To improve the sensor quality of the final ethanol.

The beverage grade ethanol is obtained at the bottom of the refining column D550 and is transferred to the ethanol storage tanks.

Fifth Step: Heads and Tails Concentration in the Heads and Tails Column D560.

The vessel R543 contains all the streams containing the impurities from the various unit operations in the plant. R543 feeds the Heads and Tails column D560.

The purpose of the Heads and Tails concentration column D560 (which operates like a rectification column) is:

- To strip the alcohol in the feed (about 60% to 70 % vol) to an alcohol content in the spent feints below 0.03% (spent feints is the bottom stream from D560 which is sent to the Manildra waste water treatment plant);

- To concentrate the alcohol to obtain at the top of the column a concentration of at least 95% by volume (this stream is recycled to the hydroselection column); and

- To eliminate all the impurities and send them to the storage, i.e.

- Heads (e.g. aldehydes, acetaldehydes and esters);
- The low oils (e.g. isoamylalcohol called “fusel oils” mainly); and
- The high oils (e.g. n-butanol, isobutanol and n-propanol.

The ethanol containing the impurities is sold as a low-grade product.

D560 operates at 2.3 bara pressure.

All effluent from the process flows to the Shoalhaven Starches waste water treatment plant for treatment.

The main material of construction for the equipment items is stainless steel.

For the vessels that vent to atmosphere, the streams flow through condensers, a washing column and then a scrubber. This is to avoid venting ethanol to atmosphere.

A new road tanker loadout facility will be installed immediately to the east of the ethanol day tank storage area.

This loadout facility will replicate the functionality of the existing facility and will consist of two loading arms to allow for the loading of both tanks of a B-double road tanker simultaneously. The facility will be used to load both road tankers and containerised tanks (Isotainers). It will be equipped with the same safety systems as the existing facility including fire deluge, safety shower and eye wash units and overfill detection and protection.

The proposed second beverage grade ethanol plant will be provided with cooling towers comprising standard cells (approximately 12) with total capacity of 6,390 m^3/hour (of cooling water). The cooling towers will be fiberglass casing, stainless steel structure with a plastic fill.

Dosing chemicals used will be stored in 1,000 litre IBCs next to the cooling towers. They will be stored in a bunded area and segregated as per the Dangerous Goods storage codes, e.g. acids stored separately from the alkalis.

The chemicals will be transported to site every fortnight to monthly.

Given the information available to date, there are no potential hazardous events associated with the cooling towers that could adversely affect people off-site as defined by the HIPAP 4 risk criteria.

3.6 EVAPORATOR

There are no changes to the following description as a result of the second beverage grade distillery.

The Water Balance Recovery Evaporator has been previously approved under MOD 2 adjacent to the Ethanol Plant.

The evaporation process for the sugar syrup uses low pressure water vapour (under vacuum). The maximum operating pressure is atmospheric for process units (piping and plate heat exchangers are under pressure on the cooling water supply side only). The sugar syrup is approximately 10 to 25% and is not a hazardous material. As the syrup is a solution (i.e. not dry) and the equipment handling the syrup is not confined then the risk of a sugar dust explosion is low. Given the low hazard potential for sugar syrup, i.e. it is not a fire, explosion or toxic hazard, then no further analysis of this process area is performed in this study.

3.7 STARCH MODIFICATIONS

There are a number of proposed modifications to the starch processing area (i.e. near Starch Dryer 5 or SD5). These are summarised as follows:

- Changes to existing and approved liquid starch tanks;
- New liquid tanks;
- A process that modifies starch to produce “cross-linked” starch, i.e. a specific product to meet market demands; and
- Three new silos for storage of “cross-linked” starch.

The tank history and modifications are detailed as follows.

1. There were originally six tanks approved at the southern side of SD5 (Ref 4). These tanks hold liquid starch, i.e. water and 36 to 38% starch (a non-hazardous mixture) and were approved under MOD 16. Three larger tanks were installed instead of the proposed six smaller tanks. These are shown on Figure 6 as the three black tanks labelled “1”.

Caustic soda (10 to 12wt%) is added to these tanks for pH control.

2. There are six silos on Figure 6 shown in blue immediately to the west of the three black tanks mentioned in Point 1 above. These silos were also approved as part of MOD 16. These silos hold cationic starch. These are labelled as “2” on Figure 6. There are no planned modifications to these silos for this PHA.

3. There are six tanks on Figure 6 shown in red immediately to the east and south of the three black tanks mentioned in Point 1 above. These proposed tanks will also contain liquid starch. These tanks are labelled as “3” on Figure 6.

For the three tanks shown in black (Point 1) and the six tanks shown in red (Point 3), 10 to 12wt% caustic soda will be added to the liquid starch for pH correction.

The liquid starch is then pumped to the existing factory to be dried.

4. "Cross-linked" starch will be produced within the six reaction tanks (labelled "4" on Figure 6). Each tank will have a capacity of 100 m^3. Initially, liquid starch will be pumped into these tanks. Caustic soda (10 to 12wt%) will be added to raise the pH and then phosphorous oxychloride (approximately 10 L per tank batch). The mixture will be allowed to react to form the required modified starch and then neutralised with either 33wt% hydrochloric acid or 50wt% sulphuric acid.

The phosphorous oxychloride will be delivered to site in drums and stored either in a dedicated Dangerous Goods cabinet and/or within a purpose-built pressure vessel (1.2 m^3). The phosphorous oxychloride will be transferred from a drum using a vacuum system into the pressure vessel and then transferred using nitrogen pressure to the reaction tanks. This is to minimise the number of equipment items that need maintenance and hence the potential for health impacts. The phosphorous oxychloride transfer facility will be located under the southern end of the starch packing shed awning roof (labelled "5" on Figure 6).

The modified or cross-linked starch will then be pumped to the SD5 for drying prior to being conveyed to one of three new silos. These silos will each have a capacity of 75 tes and will be located above the starch packing shed awning roof in line with the existing silos (also labelled "5" on Figure 6).

The cross-linked starch will be conveyed to the Cationic Starch Plant (yet to be constructed – approved under MOD 16) for further processing.

It is proposed to install four additional liquid starch tanks for GemGel, i.e. a specific liquid starch product for papermills. These tanks will be installed to the south of SD5 and are shown in two separate bunded areas (labelled "6" on Figure 6). These additional four tanks will allow other liquid starch tanks to be maintained. As with the above liquid starch tanks, caustic and/or acid will be added to make the required specification.

Caustic soda and hydrochloric acid will be stored in approved but yet to be constructed tanks to the south of Gluten Dryer 8. The existing sulphuric acid tank in the Starch Dryers 3 and 4 area will be used to supply this acid. New pumping systems will be installed to deliver these chemicals to the required tanks.

Figure 6 – Starch Modifications

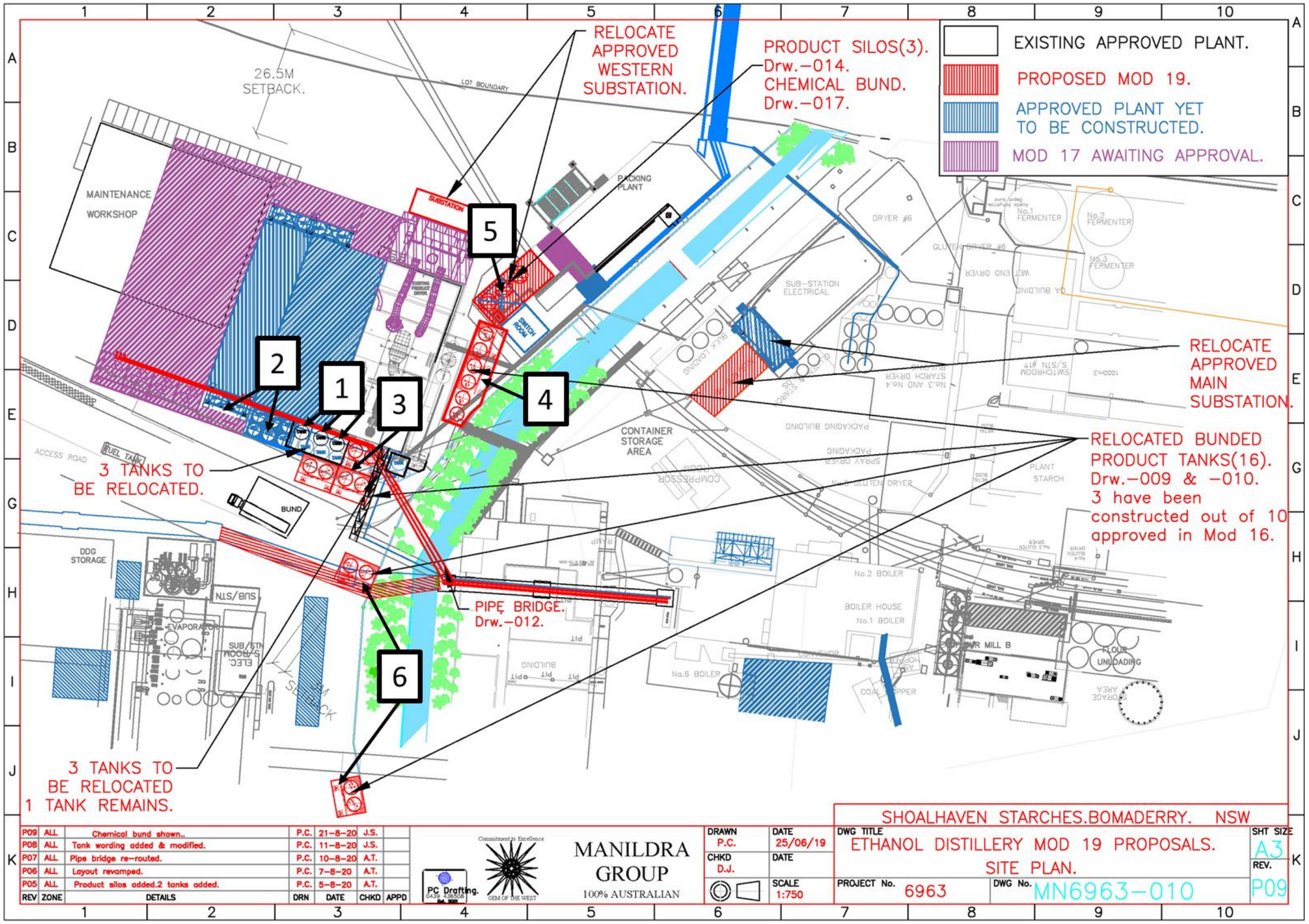

4 HAZARD IDENTIFICATION

4.1 HAZARDOUS MATERIALS

The hazardous materials involved with the modifications are:

- Ethanol;
- 3 to 5 % caustic soda (sodium hydroxide);
- Hydrogen peroxide (35wt%);
- Glycerine (a combustible liquid);
- Ethanol streams containing impurities;
- Cooling tower dosing chemicals;
- Packaged products such as starch;
- Corrosive liquids, i.e. caustic soda, hydrochloric acid and sulphuric acid;
- Phosphorous oxychloride; and
- Natural gas and biogas.

There are no new types of hazardous materials associated with the proposed (second) beverage grade distillery.

Ethanol including the Impurities:

Ethanol is a Dangerous Good Class 3 flammable liquid. It is soluble in water.

Ethanol's flammability limits are LEL (lower explosive limit) 3.5% and UEL (upper explosive limit) 19%. The control measures regarding safe handling and storage of ethanol are similar to other Class 3 materials, e.g. elimination of ignition sources, including static. It burns with a near colourless flame. The vapour is heavier than air and can accumulate in low points. Explosions of confined vapours are possible. Ethanol combustion produces carbon dioxide and carbon monoxide. Fires involving ethanol are normally extinguished with alcohol resistant foam.

The impurities in the ethanol, e.g. the fusel oils, are at low concentrations only. The main issue with these impurities is odour which is why they need to be removed from the beverage grade ethanol.

Cooling Tower Dosing Chemicals:

The same cooling water dosing chemicals that are currently used at the site are to be used for the ethanol cooling towers. The storage volumes are relatively small, i.e. IBC's (intermediate bulk containers), and these are stored within

dedicated bunds to avoid any losses of containment impacting the environment or people. The dosing chemicals are located adjacent to the ethanol cooling towers. Given the relatively small volumes and that all containers are separately bunded then no further analysis of these materials is warranted.

Hydrogen Peroxide:

Hydrogen peroxide is a Class 5.1 Dangerous Good (oxidising substance); Subsidiary Risk 8 (corrosive substance); Packing Group II.

Hydrogen peroxide (chemical formula H_2O_2) is a clear, colourless liquid with a sharp odour. It is a strong oxidising agent.

Hydrogen peroxide can react strongly with organic materials, reducing agents, some acids and alkalis, metals, flammable and combustible materials (including paper, cloth, leather etc). It is catalytically decomposed (into water and oxygen) by heavy metals and their salts, dust, oxidisable organic materials, enzymes and rust. Decomposition can also be initiated or accelerated by light, heat, high pH or various other impurities, and may be extremely violent.

Hydrogen peroxide is not combustible but will strongly support the combustion of other materials. Hydrogen peroxide is not toxic in itself, however, it can cause injury through its ability to form free, active oxygen. Irritation and burns to mucous membranes, skin, and eyes can occur.

The Time Weighted Average (TWA) exposure limit for hydrogen peroxide for an eight hour day is 1 ppm. The IDLH (immediately dangerous to life and health) is 75 ppm.

Starch:

Starch or amylum is a carbohydrate consisting of a large number of glucose units joined together. The chemical formula for starch is $(C_6H_{10}O_5)n$. It is not defined as a hazardous material or a Dangerous Good.

Starch is produced by most green plants as an energy store. It is the most common carbohydrate in human diets and is contained in large amounts in such staple foods as potatoes, wheat, corn, rice, and cassava.

Papermaking is the largest non-food application for starches globally. In a typical sheet of copy paper, the starch content may be as high as 8%.

Starch is a fine, white, odourless powder. The respiratory TWA (time weighted average) is 5 mg/m^3. It is insoluble in water. Starch is not defined as a combustible solid (it will not support combustion) but may form explosive mixtures with air. It is a potentially explosive dust when critical parameters exist, e.g. particle size less than 500 microns.

The K_{st} value for starch is up to 199 bar.m/s. These are deemed potentially weak explosions.

Starch is non-toxic to people and has a low environmental impact potential. It is mildly irritating to eyes and lungs.

Corrosive Additives:

The liquid additives are 10 to 12 wt% caustic soda, 33wt% hydrochloric acid and 50wt% sulphuric acid. If released, these liquids can cause corrosive burns to personnel and impact the environment.

Phosphorous Oxychloride:

Phosphorus oxychloride is a clear liquid with a pungent odour. It is a Dangerous Good Class 6.1 (sub-subsidiary risk 8), Packing Group I material.

Phosphorus oxychloride is a strong oxidizer and will readily react with many organic compounds. Phosphorus oxychloride reacts spontaneously with moisture to form hydrochloric acid mist and phosphoric acid.

Based on a scenario where the chemical is spilled into an excess of water (at least 5-fold excess of water), half of the maximum theoretical yield of hydrogen chloride gas will be created in approximately 7 seconds.

The liquid and its byproducts are both corrosive to eyes, skin and mucous membranes.

Any spillage of phosphorus oxychloride should be neutralized with copious amounts of water or the use of compatible absorbents. In the event of cloud formation, use a water curtain, e.g. call the fire brigade.

Phosphorus oxychloride will not burn under typical fire conditions but can react explosively with incompatible materials, e.g. ethers with trace amounts of metal salts.

The TWA (time-weighted average) is 0.1 ppm (0.63 mg/m^3) and the STEL (short-term exposure limit) is 0.5 ppm (2.8 mg/m^3).

Natural Gas and Biogas:

Natural gas and biogas are flammable, i.e. if released and ignited, there is a risk of jet fires, flash fires and explosions (if confined).

Natural gas is a Class 2.1 Dangerous Good (flammable gas).

Natural gas is a colourless hydrocarbon fluid mainly composed of the following hydrocarbons:

- Methane (typically 88.5% or higher);
- Ethane (typically 8%);
- Propane (typically 0.2%);

- Carbon dioxide (typically 2%); and
- Nitrogen (typically 1.3%).

For a typical natural gas, the TLV (threshold limit value) is approximately 1,000 ppm and the STEL (short term exposure limit) is 30,000 ppm (i.e. approaching 5 vol% which is the lower explosive limit).

The hydrocarbons are not considered to represent a significant environmental threat. Their hazard potential derives solely from the fact that they are flammable materials.

To enable ready leak detection, natural gas is normally odorised with mercaptans (sulphur containing hydrocarbons).

The flammability range is typically 5% to 15% v/v in air. The vapours are lighter than air and will normally disperse safely if not confined and/or ignited.

Products of combustion include carbon monoxide and carbon dioxide.

The composition of the biogas is typically:

- 65 - 75% methane;
- % 20 – 25 % carbon dioxide; and
- 0.07 % hydrogen sulphide

It burns with similar properties to natural gas.

4.2 POTENTIAL HAZARDOUS INCIDENTS REVIEW

In accordance with the requirements of *Guidelines for Hazard Analysis*, (Ref 2), it is necessary to identify hazardous events associated with the facility's operations. As recommended in HIPAP 6, the PHA focuses on "atypical and abnormal events and conditions. It is not intended to apply to continuous or normal operating emissions to air or water".

In keeping with the principles of risk assessments, credible, hazardous events with the potential for off-site effects have been identified. That is, "slips, trips and falls" type events are not included nor are non-credible situations such as an aircraft crash occurring at the same time as an earthquake.

The identified credible, significant incidents (in particular, with the potential for off-site impacts) for the proposed modifications are summarised in the Hazard Identification Word Diagram following (Table 1).

This diagram presents the causes and consequences of the events, together with major preventative and protective features that are to be included as part of the design.

Table 1 – Hazard Identification Word Diagram

Event Number	Hazardous Event	Causes	Consequences	Existing Safeguards - Prevention Detection Mitigation
	Distillery (all these events also apply to the second Beverage Grade Ethanol Plant)			
1	Loss of containment of flammable liquid with subsequent ignition in the bunded area	Losses of containment due to valves passing, pipe or vessels leaks, gasket failure (e.g. on a pipe or the plate heat exchangers), draining of vessels to the bund for maintenance and pump seal failure	Bund fire can lead to equipment damage and injury to people	All piping and equipment items are 304 stainless steel to reduce the risk of corrosion. Hazardous area assessment with suitably rated instruments and electrics. Operating procedures and training, e.g. prestart-up checklists, to ensure drain valves closed for start-up. LEL detectors which raise an alarm for operator response. Fire protection is to be assessed via a Fire Safety Study, however, the existing hydrant system can supply the expected firewater. Authority to Work Permits - Hot work permits. Vessels to be emptied by running the liquid out of the plant and then steam purging

Event Number	Hazardous Event	Causes	Consequences	Existing Safeguards - Prevention Detection Mitigation
2	Pump fire	Running a pump containing ethanol at flammable concentrations deadheaded, mechanical failure, e.g. hot bearings	Pump fire with the potential to propagate to the adjacent plant items containing ethanol	Operating procedures and training, e.g. prestart-up checklists, to ensure pump suction and discharge valves are open for start-up. Plant trips, e.g. on low flow from a pump or high level in the supply vessel. Pump routine maintenance. Fire protection is to be assessed via a Fire Safety Study, however, the existing hydrant system can supply the expected firewater
3	Catastrophic vessel failure	Vessel isolated and a fire occurs, column overpressure due to loss of the condenser, direct steam injection to some vessels	Potential for catastrophic vessel failure and hence a bund fire if the released ethanol is ignited. This can lead to equipment damage and injury to people. Missiles can also occur with the potential to propagate to the adjacent plant items	Vessels to be pressure protected as per AS1210. The maximum direct steam pressure is limited to 1.6 bara
4	Catastrophic vessel failure	Vacuum formation when the plant stops and vapours condense	Potential to implode the vessels and hence a bund fire if the released ethanol is ignited. This can lead to equipment damage and injury to people	All vessels designed for full vacuum

Event Number	Hazardous Event	Causes	Consequences	Existing Safeguards - Prevention Detection Mitigation
5	Release from the columns operating above atmospheric pressure	Losses of containment due to valves passing, pipe or vessels leaks and gasket	As the these columns operate above atmospheric pressure then the ethanol could immediately ignite and form a jet fire or there could be delayed ignition with a flash fire or explosion	All piping and equipment items are 304 stainless steel to reduce the risk of corrosion. Hazardous area assessment with suitably rated instruments and electrics. Operating procedures and training, e.g. prestart-up checklists, to ensure drain valves closed for start-up. LEL detectors which raise an alarm for operator response. Fire protection is to be assessed via a Fire Safety Study, however, the existing hydrant system can supply the expected firewater. Plant can be tripped and isolated remotely
6	Internal explosion within the vacuum columns	Vacuum pump stops with reverse flow of air into column	Potential to form a flammable atmosphere with ethanol. If ignited, there will be a confined explosion	Non-return valves on the vacuum pumps. No sources of ignition within the columns

Event Number	Hazardous Event	Causes	Consequences	Existing Safeguards - Prevention Detection Mitigation
	Tanks and Road Tanker and Isocontainer Filling and Storage			
7	Loss of containment into the bund. This event also applies to the proposed modifications	Overfilling a tank. Tank failure, e.g. corrosion. Pipe failure, e.g. corrosion, flange failure. Tank drain valve left open	Pool fire if ignited. This can propagate to the adjacent tanks. For historical tank explosions, some tanks (fixed roofed only) have rocketed away from the foundations. Delayed ignition can result in a vapour cloud flash fire or explosion (if confinement exists). Impact to people (radiant heat and/or exposure to products) and property	Two level instruments installed on each tank to prevent overfill including an independent high level trip. These will trip a failed closed, actuated valve on the inlet to each tank. Tanks designed to API 650. Pipes designed to AS4041. Regular maintenance and inspection procedures. Tank and site fire protection facilities including foam pourers. Earthing of all tanks, no splash filling and ignition control procedures, e.g. Authority to Work Permits - hot work permits. Training and procedures to ensure valves in the correct position following maintenance

Event Number	Hazardous Event	Causes	Consequences	Existing Safeguards - Prevention Detection Mitigation
8	Tank top fire. This event also applies to the proposed modifications	Lightning strike, hot work	Pool fire if ignited. This can propagate to the adjacent tanks. For historical tank explosions, some tanks (fixed roofed only) have rocketed away from the foundations. Impact to people (radiant heat and/or exposure to products) and property	Tanks designed to API 650. Tank and site fire protection facilities including foam pourers. Earthing of all tanks, no splash filling and ignition control procedures, e.g. hot work permits
9	Pipeline failure external to the bunded area This event also applies to the proposed modifications	Corrosion, flange failure or impact	Spillage of ethanol. Fire if ignited. Impact to people (radiant heat and/or exposure to products) and property	Regular maintenance and inspection procedures. Emergency isolation valves Firefighting system (including foam) Pipes designed to AS4041. Pipes to be located on a piperack to avoid impact damage. Pipes to be fully welded where possible

Event Number	Hazardous Event	Causes	Consequences	Existing Safeguards - Prevention Detection Mitigation
10	Leak during filling of road tanker or Isocontainer This event also applies to the proposed modifications	Failure of transfer hose. Leak from valves or fittings. Road tanker or Isocontainer overfill	Spillage of ethanol. Fire if ignited. Impact to people (radiant heat and/or exposure to products) and property	High level of surveillance and use of flame detection and shutdown systems. Drivers are well trained (DG Licence) so as to minimise chance of operator error and ensure quick response to leaks. Road tanker bay fitted with automatic foam deluge system. Remote spill containment pit to avoid collection of flammables in the loading bay. Ignition sources controlled Scully truck overfill shutdown system and road tanker rated for the DG (Dangerous Goods) area
11	Road tanker drive-away incident (i.e. driver does not disconnect the hose and drives away from the loading bay) This event also applies to the proposed modifications	Failure of procedures and hardware interlocks	Spillage of ethanol. Fire if ignited. Impact to people (radiant heat and/or exposure to products) and property. Ignition source present (road tanker engine), hence fire more likely	Driver training. Driver not in cab during filling. Road tanker bays fitted with automatic foam deluge system. “Dry-break” hose couplings

Event Number	Hazardous Event	Causes	Consequences	Existing Safeguards - Prevention Detection Mitigation
12	Leak at ethanol pumps in the storage area This event also applies to the proposed modifications	Pump seal, shaft or casing failures	Leak of ethanol in pump bays. Fire if ignited. Impact to people (radiant heat and/or exposure to products) and property	Single mechanical seal. Condition monitoring and preventative maintenance of pumps. Gas detection system and alarm. Fixed firefighting monitors, with foam, located strategically for fighting fires. Pumps in contained area.
13	Leak from Isocontainer in the storage area	Valve passing, flange leak	Fire if ignited. Impact to people (radiant heat and/or exposure to products) and property	Isocontainers are high integrity, international transport vessels with proven reliability. Training and procedures to ensure valves are closed following filling. Emergency response procedures for leaks including the application of foam
14	Leak from Isocontainer in the storage area	Valve passing, flange leak	Fire if ignited. Impact to people (radiant heat and/or exposure to products) and property	Isocontainers are high integrity, international transport vessels with proven reliability. Training and procedures to ensure valves are closed following filling. Emergency response procedures for leaks including the application of foam. The bunded area is to be graded and drained to a remote pit to avoid a large fire

Event Number	Hazardous Event	Causes	Consequences	Existing Safeguards - Prevention Detection Mitigation
	Boiler (there are no changes to the following events as a result of the second beverage grade distillery)			
15	Natural gas or biogas explosion within the boiler	Natural gas or biogas flow when the burners are offline	Buildup of natural gas or biogas in the furnace. If ignited, there is the potential for an internal explosion, i.e. damage to the furnace and boiler	Burner management system will be certified to Australian Standards which will include the need for adequate natural gas and biogas isolation and air purging prior to startup
16	Loss of containment of natural gas or biogas from the supply pipes	Pipe failure, e.g. corrosion or weld defect, gasket failure, valve leak, impact	If ignited, potential for a jet fire, flash fire or explosion which can impact personnel and equipment	The natural gas and biogas supply pipes are to be tied into the existing natural gas and biogas supply pipe systems that run through the site at present. This is an existing site risk. The pipes are to be protected from impact by locating them in piperacks. Minimum flanges used. Pipes to be included in the hazardous zone study. Remote isolation of the natural gas is possible at the gas metering station and biogas at the WWTP. The natural gas and biogas supply pipes are to be pressure tested following construction and protected against corrosion by painting. The natural gas and biogas piping and equipment items are to be compliant with the Australian Standards

Event Number	Hazardous Event	Causes	Consequences	Existing Safeguards - Prevention Detection Mitigation
17	Boiler rupture	Low level, loss of boiler feed water pumps, high and low factory demand for steam, failure of level control, control valve stuck closed, low level in feedwater tank	Catastrophic failure of the boiler, i.e. equipment damage and injury to on-site personnel if steam is released externally to the boiler	Australian Standard compliant low level protection, standby boiler feed water pumps, low and low-low level alarms, boiler trip on low-low level, maintenance on the valves and instruments), low level alarm and trip on the feedwater tank, operator checks on the boiler and feedwater tank sight glass
18	High pressure within the furnace	Tube failure within the furnace	Potential for flames to be emitted from the furnace openings and hence injure on-site personnel and damage equipment	PMs on the tubes (annual inspection), furnace trip logic to prevent high pressure (trips the forced draught fan), common alarm sounds on high pressure, fan maintenance
19	Boiler rupture	Corrosion, e.g. poor boiler feed water chemistry. Erosion, e.g. from two phase flow	Catastrophic failure of the boiler, i.e. equipment damage and injury to on-site personnel	Water softeners on the boiler feedwater supply, daily sampling, pH and TDS (total dissolved solids) checks, routine equipment inspections (weekly, monthly and yearly)
20	Failure of the steam drum or high pressure piping	Corrosion (e.g. under lagging corrosion), weld defect, safety relief valves stuck closed, failure of letdown valves	Catastrophic failure of the steam drum or piping, i.e. equipment damage and injury to on-site personnel	Routine inspections (piping and equipment), operator inspections, operator training (boiler emergency procedure to delay the re-introduction of water following a low-low water level event), redundant safety valves, certifications on equipment, high pressure alarm for operator response

Event Number	Hazardous Event	Causes	Consequences	Existing Safeguards - Prevention Detection Mitigation
	Hand Sanitiser Process (there are no changes to the following events as a result of the second beverage grade distillery)			
21	Fire within the building	Release of ethanol and/or glycerine, e.g. fork lift truck impacting an IBC, tank or final product IBC overflow or piping system leak. Release of hydrogen peroxide (an oxidiser) onto combustible material	Fire within the hand sanitizer plant, i.e. injury to people and damage to equipment. Potential for rupture of the hydrogen peroxide IBC or tanks when hydrogen peroxide decomposes	Piping designed to Manildra/Australian standards. Control of ignition sources including Hazardous Area assessment. Fire deluge system. Infra-red detectors. Non-combustible materials for construction in the building. High level trips on all tanks to prevent overflow. Product IBC is filled by a batching flow metre (to prevent overflow). Operator response to loss of containment. Trained fork lift truck drivers. Housekeeping to prevent the storage of combustible material within the building

Event Number	Hazardous Event	Causes	Consequences	Existing Safeguards - Prevention Detection Mitigation
22	Confined explosion within a tank or IBC containing ethanol or hand sanitiser	Flammable atmosphere within the process tanks or IBC. If ignited then a confined explosion can occur, e.g. ignition due to static. Incompatible chemicals left inside vessels for too long, e.g. hydrogen peroxide and ethanol or glycerine. Note: The bearing / seals on the tank 201 mixer could create a source of ignition, e.g. too hot or static	Internal explosion, i.e. injury to people and damage to equipment (local impact only). Potential to result in a building fire as per the above scenario	Nitrogen padded tanks (Tk-201 and Tk-301). Earthing of all equipment items. Instruments and electrics compliant with the hazardous area zoning requirements. Equipment maintenance to ensure integrity. Control of ignition sources, e.g. permits to work. Operating procedures require only trace quantities of hydrogen peroxide to be added and tanks are to be emptied following each batch
23	Confined explosion within the building	Flammable vapours within the building and ignition, e.g. spill of ethanol	Confined explosion, i.e. injury to people and damage to equipment (local impact only). Potential to result in a building fire as per the above scenario	Building extraction fan interlocked to the process. Hazardous area compliance and control of ignition sources. Piping designed to Manildra/Australian standards
24	Environmental impact	Loss of containment with a subsequent fire. The sprinkler system will then activate	Potential for the raw materials and final product and fire water to impact the environment when the sprinklers operate	The building is bunded. Effluent that flows outside of the building will be directed to the Manildra Waste Water Treatment Plant for processing (contained area and system)

Event Number	Hazardous Event	Causes	Consequences	Existing Safeguards - Prevention Detection Mitigation
	Starch Modifications			
25	Loss of containment of phosphorous oxychloride	Drum spill, drum opening left open, corroded drum, piping system leak, e.g. relief valve passing	Corrosive burns to personnel and damage to equipment (local impact only). Phosphorous oxychloride can react water to form hydrogen chloride and phosphoric acid, i.e. corrosive substances (local impact only). Harmful impact to the environment, e.g. if the spill enters the ground or a waterway	Piping systems designed to AS4041. Pressure vessel compliant with AS1210. Drums to be stored in a purpose-built Dangerous Goods cabinet. This cabinet and the phosphorous oxychloride handling facility (including the pressure vessel) will be bunded. Using of nitrogen for blanketing and transfers (i.e. avoiding higher likelihood release equipment items such as pumps and also avoiding contact with moisture). Drum lifters on a forklift truck to be used to minimise the likelihood of drums being dropped. Procedures and training for handling the material. Equipment preventative maintenance, e.g. relief valves. Safety shower and eyewash. Spills management plan as per the safety data sheet recommendations

Event Number	Hazardous Event	Causes	Consequences	Existing Safeguards - Prevention Detection Mitigation
26	Loss of containment of caustic soda, hydrochloric acid or sulphuric acid	Piping system leak	Corrosive burns to personnel and damage to equipment (local impact only). Harmful impact to the environment, e.g. if the spill enters the ground or a waterway	Piping systems designed to AS4041. All tanks that will have pH correction with corrosive materials will be bunded. Procedures and training for handling the materials. Equipment preventative maintenance. Safety shower and eyewash units. Spills management plan as per the safety data sheet recommendations

Event Number	Hazardous Event	Causes	Consequences	Existing Safeguards - Prevention Detection Mitigation
27	Dust explosions in the silos or dry starch conveying equipment	Static, foreign object, hot work, friction, hot surfaces	Confined dust explosion with damage to the silos or conveying equipment, potential for injury to people. The explosion vents will be located at the top of the silos, i.e. approximately 25 to 30 m above ground level. The silos will be approximately 40 m from Bolong Road. Given the vents height and distance to the nearest boundary then adverse off-site impact is not expected. Note: No flame length has ever been measured greater than 37 m (even for large volumes) so this should be taken as the upper limit (Ref 5)	All equipment containing and handling starch dust are to be designed to IECEX standards. Explosion vents to be installed on the three new silos. Separators included in SD5 to lower the likelihood of tramp metal entering the conveying equipment and silos. Conveying equipment to include blowlines, i.e. low risk of confined dust explosions due to pipeline earthing. The silos and conveying equipment are to be rated for hazardous zones including electrics and instruments are to be suitably rated and all equipment is to be bonded and earthed. Fire hydrants and fire extinguishers installed. Control of ignition sources, e.g. permits to work. Condition monitoring of equipment and preventative maintenance to limit the probability of hot surfaces from friction occurring

5 RISK ANALYSIS

The assessment of risks to both the public as well as to operating personnel around the proposed modifications requires the application of the basic steps outlined in Section 1. As per HIPAP 6 (Ref 2), the chosen analysis technique should be commensurate with the nature of the risks involved. Risk analysis could be qualitative, semi-quantitative or quantitative.

The typical risk analysis methodology attempts to take account of all credible hazardous situations that may arise from the operation of processing plants etc.

Having identified all credible, significant incidents, risk analysis requires the following general approach for individual incidents:

Risk = Likelihood x Consequence

The risks from all individual potential events are then summated to get cumulative risk.

For QRA (quantitative risk analysis) and hazard analysis, the consequences of an incident are calculated using standard correlations and probit-type methods which assess the effect of fire radiation, explosion overpressure and toxicity to an individual, depending on the type of hazard.

In this PHA, however, the approach adopted to assess the risk of the identified hazardous events is scenario-based risk assessment. The reason for this approach is the distances from the proposed modifications to residential and other sensitive land users are large and hence it is unlikely that any significant consequential impacts, e.g. due to radiant heat from fires, from the facility will have any significant contribution to off-site risk.

The risk criteria applying to developments in NSW are summarised in Table 2 on the following page (from Ref 3).

Table 2 - Risk Criteria, New Plants

Description	Risk Criteria
Fatality risk to sensitive uses, including hospitals, schools, aged care	0.5 x 10^{-6} per year
Fatality risk to residential and hotels	1 x 10^{-6} per year
Fatality risk to commercial areas, including offices, retail centres, warehouses	5 x 10^{-6} per year
Fatality risk to sporting complexes and active open spaces	10 x 10^{-6} per year
Fatality risk to be contained within the boundary of an industrial site	50 x 10^{-6} per year
Injury risk – incident heat flux radiation at residential areas should not exceed 4.7 kW/m^2 at frequencies of more than 50 chances in a million per year or incident explosion overpressure at residential areas should not exceed 7 kPa at frequencies of more than 50 chances in a million per year	50 x 10^{-6} per year
Toxic exposure - Toxic concentrations in residential areas which would be seriously injurious to sensitive members of the community following a relatively short period of exposure	10 x 10^{-6} per year
Toxic exposure - Toxic concentrations in residential areas which should cause irritation to eyes or throat, coughing or other acute physiological responses in sensitive members of the community	50 x 10^{-6} per year
Propagation due to Fire and Explosion – exceed radiant heat levels of 23 kW/m^2 or explosion overpressures of 14 kPa in adjacent industrial facilities	50 x 10^{-6} per year

As discussed above, the consequences of the potential hazardous events are initially analysed to determine if any events have the potential to contribute to the above-listed criteria and hence worthy of further analysis.

5.1 POOL FIRE INCIDENTS

The credible hazardous events associated with the proposed modifications are largely pool fires due to potential losses of containment being ignited. The potential pool fire events associated with the plants, tanks and bunds are detailed in Table 3. This data is used in the fire modelling. A discussion on burndown rates and surface emissive powers (SEP) is given below.

Burndown Rates:

For burning liquid pools (Ref 6), heat is transferred to the liquid via conduction, radiation and from the pool rim.

Wind can also affect the burning rate (experiments have shown both an increase and decrease in burning rates due to the effects of wind) but also can affect flame stability (and hence average flame emissive power) (Ref 7). Therefore, average reported values for burndown rates are used in this study.

For very large pool fires with diameters greater than 5 to 10 m, there is some evidence of a decrease in burning rate.

Experimental data for the ethanol burndown rate is 1 mm/min (Refs 7 and 8).

The burning rate is used in the determination of flame height. Normally, the higher the burning rate, the higher the estimated flame height.

Surface Emissive Power:

Surface emissive power can be either derived by calculation or by experimentation. Unfortunately, experimental values for surface emissive powers are limited.

When calculated, the results can be overly conservative, particularly for large diameter fires, as it is assumed that the entire flame is at the same surface emissive power. This is not the case for large diameter fires as air entrainment to the centre of the flame is limited and hence inefficient combustion occurs.

For ethanol, a literature search (Refs 9 and 10) indicates the following data:

SEP's of 50kW/m^2 for large fires (pool diameter => 25 m) and 60 kW/m^2 for pool fires less than 25 m in diameter appear reasonable.

The distances to specified radiant heat levels for the potential fire scenarios are shown in Table 3. The distances were calculated using the View Factor model for pool fires (Refs 7 and 8). Graphical representations of the estimated radiant heat contours are shown in Appendix C.

As the additional ethanol tanks will be installed in the same bund as the existing identical ethanol tanks then no further bund or tank-top fire modelling is required for these events.

Hand Sanitiser Building Fire Modelling:

For a controlled building fire (automatic sprinklers), the fire area range can be from a relatively small area, e.g. 5% of the design area, to at worst 50% of the design area of operation of the sprinkler system (Ref 11). This is also due to the roof falling onto the fire load, i.e. the entire area of the building will not be the fire area. Because of the influence of the fire protection system, the burning rate would be significantly reduced. Therefore, several representative fire areas can be modelled, however, in this PHA, it is assumed that the roof has fallen in and the walls have failed leaving a fire area of approximately 50% of the building area.

The hand sanitiser building (bunded) dimensions are 7.6 m wide and 10 m long. This provides a floor area of 76 m^2. Assuming 50% is the fire area then this is estimated to be 0.5 x 76 = 38 m^2. This is equivalent to an approximate 7 m diameter fire. For this diameter fire, the surface emissive power is taken to be 60 kW/m^2. This is conservative as Ref 9 quotes reduction in the surface emissive powers for ethanol when diluted with water (which is available from the deluge system and/or the nearby fire water monitors). The quoted values for a 65vol% ethanol solution are less than 20 kW/m^2. This conservatism also applies to the distilleries as these are fitted with fire water deluge systems.

Given the fire surface emissive power and the fire area, then the view factor method can be used for estimation of radiant heat from the flames.

The distances to specified radiant heat levels for the hand sanitiser fire scenario is shown in Table 3. A graphical representation of the estimated radiant heat contours is shown in Appendix C. These calculations assume the fire protection system has failed (approximately 5% probability) and no water from the fire water monitors, i.e. conservative.

Table 3 – Fire Scenarios Calculation Data and Results

Note that "Eq. D" is the equivalent diameter of the fire (4 x the fire area / the fire perimeter) and "SEP" is the surface emissive power (i.e. the radiant heat level of the flames).

Item No.	Item Description	Width, m	Length, m	Eq. D, m	Tank Height, m	Liquid Density, kg/m^3	SEP, kW/m^2	Distance to Specified Radiant Heat Level, m (from base of flame)			Maximum Ground Level Radiant Heat, kW/m^2 (for tank fires only)
								23 kW/m^2	12.6 kW/m^2	4.7 kW/m^2	
1	2017 Beverage Grade Distillery bund fire	13	19	15	-	790	60	4	8	17	-
2	Ethanol storage area bund fire	26	33	29	-	790	50	4	10	24	-
3	Ethanol day tank area bund fire (this is the bund where the additional ethanol tanks will be installed)	21	23	22	-	790	60	4	10	22	-
4	Tank top fire – 240 m^3 tanks. This also applies to the additional ethanol tanks	-	-	4.5	14.7	790	60	2	4	7	<1 kW/m^2 at 11 m from the tank wall
5	Tank top fire – 777 m^3 tank	-	-	7.46	18	790	60	2	5	10	<1.7 kW/m^2 at 14 m from the tank wall
6	Fire at the road tanker loadout bay or at an Isocontainer (Note 2) This also applies to the second road tanker loadout bay	7	25	7	-	790	60	3	5	10	-
7	Hand Sanitiser Building			7	-	790	60	3	5	10	-

Item No.	Item Description	Width, m	Length, m	Eq. D, m	Tank Height, m	Liquid Density, kg/m^3	SEP, kW/m^2	Distance to Specified Radiant Heat Level, m (from base of flame)			Maximum Ground Level Radiant Heat, kW/m^2 (for tank fires only)
								23 kW/m^2	12.6 kW/m^2	4.7 kW/m^2	
8	2020 second Beverage Grade Distillery bund fire	24.6	23.9	24	-	790	60	4	10	24	-
9	2020 new pump bund fire (Note 2)	6	14.5	6	-	790	60	2	4	9	-

Notes for Table 3:

1. The bund fires include releases from piping leaks which ignite as well as releases from tank failures.
2. Modelled as a channel fire, i.e. flame height estimated based on width.

The values of interest for radiant heat (DoP, HIPAP No. 4 and ICI HAZAN Course notes) are shown in Table 4.

Table 4 - Radiant Heat Impact

HEAT FLUX (kW/m^2)	EFFECT
1.2	Received from the sun at noon in summer
2.1	Minimum to cause pain after 1 minute
4.7	Will cause pain in 15-30 seconds and second degree burns after 30 seconds. Glass breaks
12.6	30% chance of fatality for continuous exposure. High chance of injury Wood can be ignited by a naked flame after long exposure
23	100% chance of fatality for continuous exposure to people and 10% chance of fatality for instantaneous exposure Spontaneous ignition of wood after long exposure Unprotected steel will reach thermal stress temperatures to cause failure
35	25% chance of fatality if people are exposed instantaneously. Storage tanks fail
60	100% chance of fatality for instantaneous exposure

For information, further data on tolerable radiant heat levels is shown in Table 5.

Table 5 – Layout Considerations – Tolerable Radiant Heat Levels

Plant Item	Tolerable Radiant Heat Level, kW/m^2	Source
Drenched Storage Tanks	38	Ref 8
Special Buildings (Protected)	25	Ref 8
Cable Insulation Degrades	18-20	Ref 8
Normal Buildings	14	Ref 8
Vegetation	12	Ref 8
Plastic Melts	12	Ref 8
Escape Routes	6	Ref 8
Glass Breakage	4	Ref 12
Personnel in Emergencies	3	Ref 8
Plastic Cables	2	Ref 8
Stationary Personnel	1.5	Ref 8

The results in Table 3 are analysed as follows to check compliance with HIPAP 4 (Ref 3, Table 2) risk criteria.

For assessment of the effects of radiant heat, it is generally assumed that if a person is subjected to 4.7 kW/m^2 of radiant heat and they can take cover within approximately 20 seconds then no serious injury, and hence fatality, is expected. However, exposure to a radiant heat level of 12.6 kW/m^2 can result in fatality for some people for limited exposure durations.

The effect of heat radiation on a person can be calculated from the probit equation below and the probability of fatality predicted by transforming the probit. The probit equation is based on thermal dose.

$$\text{Probit} = -36.38 + 2.56 \ln(tQ^{1.33}) \text{ (Ref 7)}$$

t exposure time (sec)

Q heat flux (W/m^2)

Note that this probit is only valid for very short exposure durations (less than 1 minute). For the purposes of this risk assessment it is assumed a person has 20 seconds to escape from heat radiation (i.e. an exposure duration of 20 seconds).

For the radiant heat levels of interest, the probability of fatality from the above probit is shown in the following table.

Table 6 – Probability of Fatality from Radiant Heat

Radiant Heat, kW/m^2	Probability of Fatality
4.7	0.0
12.6	0.07
23	0.72

Therefore, the radiant heat level of 12.6 kW/m^2 is taken to be the approximate lower limit for fatality from radiant heat.

Given that the 12.6 kW/m^2 contour remains on site for all ethanol pool fire scenarios and the large separation distance to the nearest residential area (approximately 500 m) then the following risk criteria (Table 2) are satisfied:

- The risk criteria for fatality and injury in residential areas; and
- The risk criterion for fatality in neighbouring industrial and commercial facilities as well as open spaces.

Also, as the 12.6 kW/m^2 contour remains on site for all ethanol pool fire scenarios then the fatality risk criterion of 50 x 10^{-6}/year is satisfied as it is contained within the boundary of the site.

The risk of propagation due to fires to neighbouring industrial areas (i.e. exceeding 23 kW/m^2) is not expected given the predicted results in Table 3, i.e. this contour remains on site. Therefore, the criterion of 50 x 10^{-6}/year for industrial propagation risk for exceeding 23 kW/m^2 (Table 2) is satisfied for fire events.

Given the limited off-site radiant heat impact as above, no further risk analysis of the identified ethanol pool fire scenarios is warranted in this study as compliance with the DoP criteria (Table 2) has been shown.

5.2 JET FIRES

The majority of the 2017 and 2020 proposed ethanol distilleries operate at a partial vacuum. Therefore, should a leak occur, air will be drawn into the process. If a source of ignition was present then a confined explosion would occur. This is an unlikely event as there are no normal sources of ignition within the equipment.

Once the partial vacuum is lost then the process will not continue to operate as per the design intent. The energy sources to generate the ethanol product are lost, e.g. the overheads from one column provides the reboiler duty for another column.

As the first rectification column (D540) in the 2017 distillery is the only ethanol vapour process that operates above atmospheric pressure in this plant then leaks in vessels and piping may result in a jet fire (if ignited). This rectifier operates at 1.1 barg at the top of the column (where the highest concentration of ethanol exists). The bottom of this column contains mostly water and impurities (spent feints) and only 0.03% ethanol, i.e. it is not flammable.

For the 2020 proposed distillery, there are two columns that operate above atmospheric pressure, i.e. D540 and D560. The operating pressures are the same, i.e. 1.3 barg. As with the first rectification column in the 2017 distillery, a vapour leak may result in a jet fire from the D540 or D560 systems.

A jet fire for a 50 mm hole is modelled in this study to determine if adverse off-site impacts can occur. If a catastrophic pipe failure was to occur then the columns' pressure would be lost and the process would be unable to continue to operate. Therefore, a catastrophic pipe break is not modelled for jet fire analysis.

The analysis (Ref 6) of a potential jet fire from the 2017 distillery first rectification column and the 2020 D540 / D560 columns is shown in Table 7. The ethanol pressure is taken as 1.1 barg at 98 C for the 2017 distillery and 1.3 barg and 100 C for the 2020 distillery. Whilst the tops of the columns are approximately 40 m above ground level, the concentrated ethanol vapour is piped close to ground level. Therefore, jet fires can occur close to ground level and impact people.

Table 7 – Jet Fires

Stream	Estimated Release Rate, kg/s	Estimated Length of Jet, m
50 mm hole – 2017 Distillery	1	8
50 mm hole – 2020 Distillery	1	8

The distance from the 2017 first rectification column to Bolong Road is approximately 23 m. For a vertical jet fire, the radiant heat flux is estimated to be 1 kW/m^2 at this location (it will be less for a horizontal jet fire).

The distance from the D540 (the closest column to the boundary and therefore worst-case) in the 2020 proposed distillery to Bolong Road is approximately 15 m. For a vertical jet fire, the radiant heat flux is estimated to be 2 kW/m^2 at this location (again, it will be less for a horizontal jet fire).

For this low level of radiant heat, no adverse off-site impact from a potential ethanol vapour jet fire is expected. Therefore, no further analysis of jet fires from the distilleries is performed.

5.3 Flash Fires and Vapour Explosions

5.3.1 Flash Fires and Vapour Explosions - Distilleries

Delayed ignition of ethanol vapour from the pressurised columns can result in a flash fire or a vapour cloud explosion (if confined).

There are two credible cases for a flash fire:

1. Release from a 50 mm hole with delayed ignition; and
2. Catastrophic equipment failure with a release of the ethanol vapour within the relevant column and overhead piping.

To assess if the lower explosive limit (LEL) can reach the nearest site's boundary and hence cause adverse off-site impact, the meteorological data shown in Appendix D was used.

50 mm Hole Releases:

For the 50 mm hole vapour releases (1 kg/s) with delayed ignition, the release cases were modelled in the ALOHA program. Releases are assumed to be 3 m above ground. The terrain includes structures, i.e. process equipment and buildings. The distances to the LEL are shown in the following table.

Table 8 – 50 mm Hole Vapour Releases to LEL

Weather / Wind	Distance to LEL (m)
A2	11
B3	11
C5	11
D5	11
E3	11
F1.5	18

Note: For this low release rate, the accuracy of near field concentrations predictions is not high and there is a limit (i.e. 11 m). However, ALOHA predicts the LEL may reach up to 18 m away from the point of release for F1.5.

The distances to the site's closest (northern) boundary from the 2017 distillery pressurised column (D540) and the two pressurised columns for the 2020 proposed distillery (D540 and D560) are approximately 23 m, 15 m and 22 m, respectively.

Therefore, only one weather / wind combination (F1.5) for the 2020 proposed D540 column can result in off-site fatality. This scenario is included in the risk assessment in Appendix E.

Catastrophic Equipment Failure:

This section has been revised since the 2017 distillery PHA. The original assessment was relatively simple as only one column caused off-site impact (fatality from flash fires) and once compliance with the HIPAP 4 risk criteria was shown then no further assessment was conducted. For example, wind direction was not needed to be taken into account, as normally required in quantitative risk analyses, as risk compliance was already shown.

As there are now three columns with the potential for offsite impact then the calculations in this section have been revised based on standard quantitative risk analysis methodologies.

The quantities of ethanol vapour that can be released when there is a catastrophic column or vapour piping system failure for the 2017 distillery pressurised column (D540) or the two pressurised columns for the 2020 proposed distillery (D540 and D560) are approximately 250 kg, 400 kg and 90 kg, respectively. These quantities have been determined by subtracting the ethanol remaining in the columns when atmospheric pressure is reached, i.e. following the catastrophic failure event, from the original vapour quantity at operating pressure and temperature.

The results of the instantaneous release dispersion calculations in ALOHA are shown in Table 9.

Table 9 – Flash Fires from Instantaneous Releases

Weather / Wind:	Distance to LEL, m		
	2017 D540	2020 D540	2020 D560
A2	22	29	12
B3	21	26	11
C5	20	23	11
D5	21	25	11
E3	23	31	14
F1.5	39	51	22

The distances to the site's closest (northern) boundary from the 2017 distillery pressurised column (D540) and the two pressurised columns for the 2020 proposed distillery (D540 and D560) are 23 m, 15 m and 22 m, respectively.

The following weather / wind combinations from the south could cause off-site fatality (i.e. to someone within a flash fire):

- 2017 D540: E3 and F1.5;
- 2020 D540: All weather / wind combinations; and
- 2020 D560: F1.5.

Explosions are less likely as there is little confinement along Bolong Road and to the north as well as the relatively small amount in the unconfined vapour cloud. Therefore, the analysis for off-site fatality is based on flash fires. See Appendix E for the details.

The quantitative risk analysis results from Appendix E show the cumulative individual fatality risk to a person at the closest (northern) boundary is approximately 0.13 pmpy. This is below all criteria shown in Table 2 and therefore the HIPAP 4 criteria are satisfied.

5.3.2 Vapour Explosions due to Tank Overfills

It is noted that explosions involving the vapours from flammable liquids are possible and are acknowledged in Table 1. Two notable incidents involving releases of flammable liquids that have resulted in unconfined vapour explosions are detailed below.

One of the most recent incidents occurred at the fuel storage facility at Buncefield, UK. In the early hours of Sunday 11th December 2005, a number of explosions occurred at Buncefield Oil Storage Depot, Hemel Hempstead, Hertfordshire. At least one of the initial explosions was of massive proportions and there was a large fire, which engulfed a high proportion of the site. Over 40 people were injured; fortunately there were no fatalities. The explosion was the result of a large loss of containment of flammable liquid.

Another similar incident occurred at the Texaco Newark storage facility, January 7 (i.e. during winter again), 1983. The tanks involved here had little level protective instrumentation; tank level was primarily achieved via frequent dipping with subsequent checklist completion. The material was super unleaded gasoline. During a transfer operation, one tank overflowed at approximately midnight and a vapour cloud formed. It travelled approximately 300 metres towards an incinerator (most likely source of ignition given eye-witness reports) and then exploded. There was one fatality and twenty four people injured.

Issues in common with two events are:

- Overflow from height, spraying of the flammable liquid causing a mist;
- Cold ambient temperatures (Buncefield approximately -2 deg Cel, similarly for Newark);
- Low wind speeds (e.g. Buncefield - Pasquill stability class F);
- Rolling mist (e.g. Buncefield - 5 to 7 metres high mist with confinement, i.e. between buildings and amongst trees);
- Delayed ignition; and
- Large amounts lost - Buncefield approximately 300 tes and Newark approximately 450 tes.

The following summarised recommendations are from the Buncefield Safety Task Group's investigation. Comment is included on their applicability to the Shoalhaven Starches ethanol tank storage area.

- The overall systems for tank filling control need to be of high integrity, with sufficient independence to ensure timely and safe shutdown to prevent tank overflow and the overall systems for tank filling control meet AS 61511. *This will be achieved via tank differential pressure level monitoring with alarm, independent local level monitoring and an independent high level trip which stops the ethanol feed to the new tanks.*

- Management systems for maintenance of equipment and systems to ensure their continuing integrity in operation. *Shoalhaven Starches have a safety management system which includes equipment item maintenance, including instrumentation testing requirements*. *This system will be modified to suit the project requirements.*

- Fire-safe shut-off valves should be used and remotely operated shut-off valves (ROSOVs) should be installed on tank outlets. *Shoalhaven Starches plan to use fire-safe valves and install ROSOVs on the tanks' inlet and outlet lines.*

- Bunds are to be leak tight and the bund compliant with AS1940. *These recommendations are consistent with the Shoalhaven Starches bund designs*. *The existing bunds integrity will be checked and fixed if necessary during the project.*

- Site-specific planning of firewater management and control measures should be undertaken. *Firewater containment is afforded by the tank bunds and on-site waste water containment facilities. Beyond these measures, further emergency response is required.*

- Procedures exist for defining roles, responsibilities and competence, staffing and shift work arrangements (e.g. managing fatigue), shift handover, organisational change and management of contractors, performance evaluation and process safety performance measurement including procedures for investigation of incidents and near misses, and auditing. *Shoalhaven Starches have a safety management system which includes these requirements*. *This system will be modified to suit the project requirements.*

- Emergency procedures exist inclusive of firefighting requirements. *Shoalhaven Starches have an emergency response plan for their site which will be modified for the project*.

In summary, unconfined vapour cloud explosions resulting from the spillage of a hydrocarbon at ambient temperature and below its boiling point are rare (Ref 13). If enough hydrocarbon is spilt, particularly from height with low wind speeds to minimise dilution, then a vapour cloud is possible.

Given the measures proposed at the Shoalhaven Starches site, the expected likelihoods for these types of events are still expected to be rare and therefore do not pose significant off-site risks.

5.4 NATURAL GAS AND BIOGAS RELEASES – FIRES AND EXPLOSIONS

There are no changes to the following description as a result of the second beverage grade distillery.

Releases from the natural gas or biogas piping can be ignited. The natural gas pressure throughout the site is 210 kPag. As this is higher than the biogas system then the analysis below is on the natural gas system, i.e. worst-case.

The analysis of potential jet fires is shown in Table 10. The mass rates were estimated using TNO's EFFECTS program and the flame length via the Considine and Grint equation (Ref 14). The pipe length used was 100 m. An 80 mm diameter pipe is assumed.

Table 10 – Natural Gas Jet Fires

Stream	Estimated Release Rate, kg/s	Estimated Length of Jet, m
Full bore failure (80 mm)	0.71	9
50 mm hole	0.55	8
13 mm hole	0.053	3

Notes: Jet flames modelled using methane.

Other than the tie-in point for the natural gas line, both the natural gas and biogas pipe runs are further away from Bolong Road than the potential jet fire lengths in Table 10.

Potential vapour cloud explosions and flash fires can occur from the natural gas or biogas line failures, i.e. delayed ignition.

The effects from explosion overpressures (Ref 3) are summarised in Table 11.

Table 11 – Effects of Explosion Overpressure

OVERPRESSURE, kPa	PHYSICAL EFFECT
3.5	90% glass breakage No fatality, very low probability of injury
7	Damage to internal partitions & Joinery 10% probability of injury, no fatality
14	Houses uninhabitable and badly cracked

OVERPRESSURE, kPa	PHYSICAL EFFECT
21	Reinforced structures distort, storage tanks fail 20% chance of fatality to person in building
35	Houses uninhabitable, rail wagons & plant items overturned. Threshold of eardrum damage, 50% chance of fatality for a person in a building, 15% in the open
70	Complete demolition of houses Threshold of lung damage, 100% chance of fatality for a person in a building or in the open

For flash fires, any person inside the flash fire cloud is assumed to be fatally injured. As flash fires are of limited duration (typically burning velocity is 1 m/s, Ref 15) then those outside the flash fire cloud have a high probability of survival without serious injury.

The analysis of the potential vapour cloud explosions and flash fires from the natural gas pipe failures is shown in Table 12. The mass calculated in the flammable range is assumed to be 100% confined, i.e. all this gas is involved in the explosion calculations. As methane is not a high reactive flammable gas and the quantities involved are relatively small then a medium deflagration (Curve 5) is assumed in the explosion calculations (multi-energy method – TNO).

Table 12 - Natural Gas Vapour Cloud Explosions and Flash Fires

Stream	Mass of Natural Gas in the Flammable Range, kg	Radius of Flash Fire, m	Distance (m) to 14 kPa Explosion Overpressure	Distance (m) to 7 kPa Explosion Overpressure
Full bore failure (80 mm)	6.5	33 m	13 m	26 m
50 mm hole	4.2	27 m	11 m	22 m

Notes: 1. Pipeline failures assumed to be isolated within 30 minutes.

2. Radius of flash fires calculated to be the distance to LEL (lower explosion limit) at F weather stability and 2 m/s wind speed.

3. 13 mm holes not modelled as they are too small to generate gas clouds of any significant size.

For these releases of natural gas, choked flow exists and rapid jet mixing with air occurs. The result is a relatively small vapour cloud size with limited consequential impacts if ignited. The 30 minute release duration also has no significant impact on the release. Steady state conditions are reached soon after

the release occurs (i.e. after approximately 4 minutes, the distance to the LEL does not change at steady state dispersion conditions).

Given these results for the natural gas vapour cloud explosions and flash fires, no adverse consequential impacts will be imposed off-site for the main pipe runs. The low likelihoods for these events are supported by the following data (Ref: UK HSE (Ref 16).

Table 13 – Piping Failure Frequencies

Failure Rates (per m per year) for Pipework Diameter (mm)					
Hole Size:	**0 - 49**	**50 - 149**	**150 - 299**	**300 - 499**	**500 – 1,000**
3 mm diameter	1×10^{-5}	2×10^{-6}			
4 mm diameter			1×10^{-6}	8×10^{-7}	7×10^{-7}
25 mm diameter	5×10^{-6}	1×10^{-6}	7×10^{-7}	5×10^{-7}	4×10^{-7}
1/3 pipework diameter			4×10^{-7}	2×10^{-7}	1×10^{-7}
Guillotine	1×10^{-6}	5×10^{-7}	2×10^{-7}	7×10^{-8}	4×10^{-8}

Typical probabilities of gas ignition are shown in the following table (Ref 17).

Table 14 – Gas Ignition Probabilities

Leak	**Probability of Ignition**
	Gas
Minor (<1 kg/s)	0.01
Major (1 to 50 kg/s)	0.07
Massive (>50 kg/s)	0.3

For example, the frequency of catastrophic (guillotine) pipe failure for an 80 mm pipe is 5×10^{-7} / m per year. If a probability of ignition of 0.07 is used, i.e. a major leak, then the combined fire and explosion likelihood is:

$$0.07 \times 5 \times 10^{-7} \text{ / m per year} = 3.5 \times 10^{-8} \text{ / m per year.}$$

This is a low level of risk, it is below the risk criteria shown in Table 2 and not considered intolerable. The ALARP (As Low As Reasonably Practicable) principle is achieved; primarily due to compliance with the Australian Standards for piping.

5.5 PROPAGATION AND CUMULATIVE RISK

There are design and safety management system controls (summarised in Table 1) that are designed to prevent hazardous events occurring. These include designing to Australian and international standards and codes, hazardous area assessments and controls of ignition sources, e.g. permits to work. Should these prevention controls fail and an incident occur then propagation is possible for some events.

Given the types of potential hazardous events that can occur at the ethanol facility, the main risk of propagation is from pool fires. Flash fires are lower propagation risk events as they have limited durations.

The potential for propagation is summarised in the following table (see Appendix C for the estimated radiant heat contours). The main mitigation controls are provided to show how the risk of event propagation will be minimised.

Table 15 – Hazardous Event Propagation Summary

Event:	Potential to Propagate to:	Mitigation Controls:
Fire in the original industrial grade ethanol distillery, the 2017 beverage grade distillery or the proposed 2020 beverage grade distillery	The adjacent distilleries and processes, e.g. the original industrial grade ethanol distillery, the 2017 beverage grade distillery or the proposed 2020 beverage grade distillery	Deluge system installed at each of the distilleries. Backup fire water and foam are available from hoses and monitors
Ethanol storage bunds fires	Hand Sanitiser Building	Deluge system installed within the Hand Sanitiser Building. Backup fire water and foam are available from hoses and monitors
Ethanol day tanks bund fire	Proposed 2020 road tanker loadout	Identical to the existing road tanker loadout, i.e. a foam deluge system that is manually operated or automatically by fire detectors. Also, hydrants, fixed monitors and fire extinguishers to be available
Ethanol tank-top fires	Other ethanol tanks	Foam pourers as per AS1940, roof mounted cooling water nozzle (the cooling water flow can be initiated manually or via high temperature detected at the tank), monitors (foam and water) and hydrants

Event:	Potential to Propagate to:	Mitigation Controls:
Original road tanker loadout fire	Adjacent six denaturant storage tanks (5 m^3 each)	For the road tanker loadout, there is a foam deluge system that is manually operated or automatically by fire detectors. Also, hydrants, fixed monitors and fire extinguishers are available. For the denaturant storage tanks, there are: 1. Tank cooling sprays. 2. Foam deluge. This system is automatically activated via LEL (lower explosion limit) detectors and manually by operators. 3. High and high-high tank temperature alarms for operator response, i.e. applying foam from the installed foam monitors
Proposed 2020 road tanker loadout	Ethanol pumps to the west and then the ethanol day tanks	It is proposed to install the same fire detection and protection equipment as the original road tanker loadout facility (as list in the first paragraph above)
Proposed ethanol pumps bund fires	Ethanol day tanks and the proposed 2020 road tanker loadout facility	Foam pourers as per AS1940, roof mounted cooling water nozzle (the cooling water flow can be initiated manually or via high temperature detected at the tank), monitors (foam and water) and hydrants Identical to the existing road tanker loadout, i.e. a foam deluge system that is manually operated or automatically by fire detectors. Also, hydrants, fixed monitors and fire extinguishers to be available

Propagation from boiler incidents is a low likelihood, e.g. the pipe failure likelihoods in Table 13. Compliance and certification to the boiler codes ensures the risk of incidents achieves ALARP. There can be containers stored to the north of the proposed boiler and there is a cooling tower to the west, however, there are no significant propagation risks to or from these areas for the proposed boiler.

Given that significant levels of radiant heat from potential pool fires remain on-site, the area to the north of the ethanol facility is rural land and that the likelihood of a catastrophic failures leading to a flash fire or possible explosion is acceptably low then it is reasonable to conclude that the beverage grade ethanol processes do not make a significant contribution to the existing cumulative risk in the area.

5.6 SOCIETAL RISK

The criteria in HIPAP 4 for individual risk do not necessarily reflect the overall risk associated with any proposal. In some cases, for instance, where the 1 pmpy contour approaches closely to residential areas or sensitive land uses, the potential may exist for multiple fatalities as the result of a single accident. One attempt to make comparative assessments of such cases involves the calculation of societal risk.

Societal risk results are usually presented as F-N curves, which show the frequency of events (F) resulting in N or more fatalities. To determine societal risk, it is necessary to quantify the population within each zone of risk surrounding a facility. By combining the results for different risk levels, a societal risk curve can be produced.

In this study of the modified Shoalhaven Starches site, the risk of off-site fatality is below the HIPAP 4 risk criteria. As the nearest house is approximately 500 m away, the concept of societal risk applying to populated areas is therefore not applicable for this project.

5.7 RISK TO THE BIOPHYSICAL ENVIRONMENT

The main concern for risk to the biophysical environment is generally with effects on whole systems or populations. For this site, it is suitably located away from residential areas. However, due to the nature of the activities, there are operations, e.g. product transfers and road tanker filling, where losses of containment can potentially impact the environment.

For the proposed modifications, there are no solid or gaseous effluents that could significantly impact the environment.

Spills of ethanol from the process equipment, tanks, adjacent piping and road tanker filling bay are to be contained in the bunds and sumps. The bunded areas are to be sized to contain the entire contents of the single tank so that a total loss of contents does not spill over the bund (including an allowance for fire water). Should the proposed secondary containment fail, Shoalhaven Starches have a drainage system that collects and transfers all waste liquids to their treatment plant at their farm on the north side of Bolong Road. Any major on-site spills can be contained here.

All tanks associated with the starch modifications will also be bunded to prevent environmental impact.

Whereas any adverse effect on the environment is obviously undesirable, the results of this study show that the risk of losses of containment is broadly acceptable.

6 CONCLUSION AND RECOMMENDATIONS

The risks associated with the proposed modifications at the Shoalhaven Starches Bomaderry site have been assessed and compared against the DoP risk criteria.

The results are as follows and show compliance with all risk criteria.

Description	Risk Criteria	Risk Acceptable?
Fatality risk to sensitive uses, including hospitals, schools, aged care	0.5 x 10^{-6} per year	Yes
Fatality risk to residential and hotels	1 x 10^{-6} per year	Yes
Fatality risk to commercial areas, including offices, retail centres, warehouses	5 x 10^{-6} per year	Yes
Fatality risk to sporting complexes and active open spaces	10 x 10^{-6} per year	Yes
Fatality risk to be contained within the boundary of an industrial site	50 x 10^{-6} per year	Yes
Injury risk – incident heat flux radiation at residential areas should not exceed 4.7 kW/m^2 at frequencies of more than 50 chances in a million per year or incident explosion overpressure at residential areas should not exceed 7 kPa at frequencies of more than 50 chances in a million per year	50 x 10^{-6} per year	Yes
Toxic exposure - Toxic concentrations in residential areas which would be seriously injurious to sensitive members of the community following a relatively short period of exposure	10 x 10^{-6} per year	Yes
Toxic exposure - Toxic concentrations in residential areas which should cause irritation to eyes or throat, coughing or other acute physiological responses in sensitive members of the community	50 x 10^{-6} per year	Yes
Propagation due to Fire and Explosion – exceed radiant heat levels of 23 kW/m^2 or explosion overpressures of 14 kPa in adjacent industrial facilities	50 x 10^{-6} per year	Yes

Societal risk, area cumulative risk and environmental risk is also concluded to be acceptable.

The primary reasons for the low risk levels from the modifications are that significant levels of radiant heat from potential fires are contained on-site and the likelihood of catastrophic equipment failures leading to off-site impact from flash fires is acceptably low.

Based on the analysis in this PHA, the following recommendations are made:

1. Provide leak detection in the proposed pump bund with an alarm in the control room.

2. Provide fire detection in the proposed pump bund that automatically initiates a deluge system.

3. Ensure that the fire water containment systems are adequate to contain the design quantities of contaminated fire water for the new processes, in particular, the new beverage grade distillery and the new road tanker loadout.

7 APPENDIX A – 2017 DISTILLERY PROCESS FLOW DIAGRAM

Appendix A - 2017 Distillery Process Flow Diagram

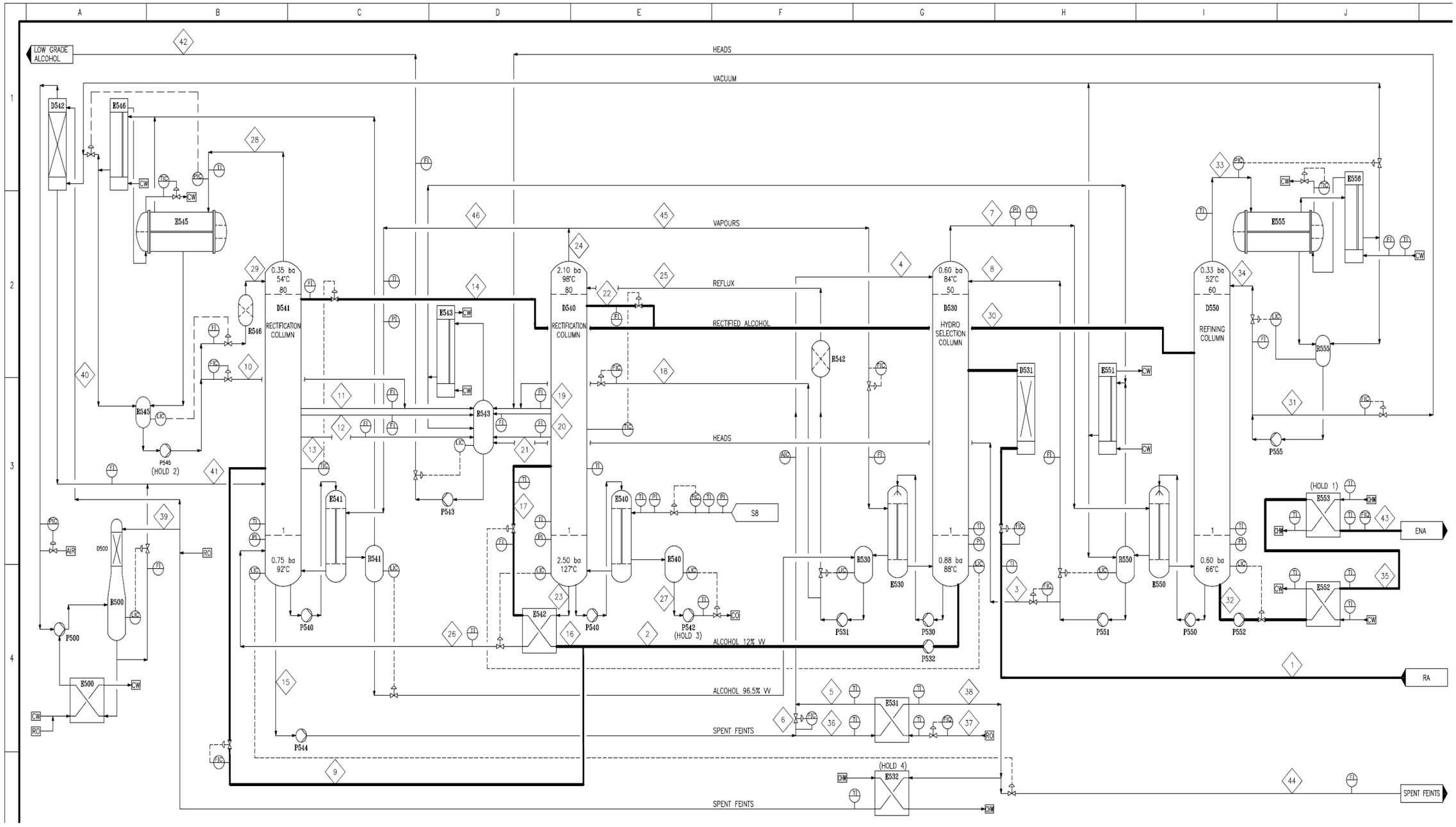

8 APPENDIX B - 2020 DISTILLERY PROCESS FLOW DIAGRAM

Appendix B - 2020 Distillery Process Flow Diagram

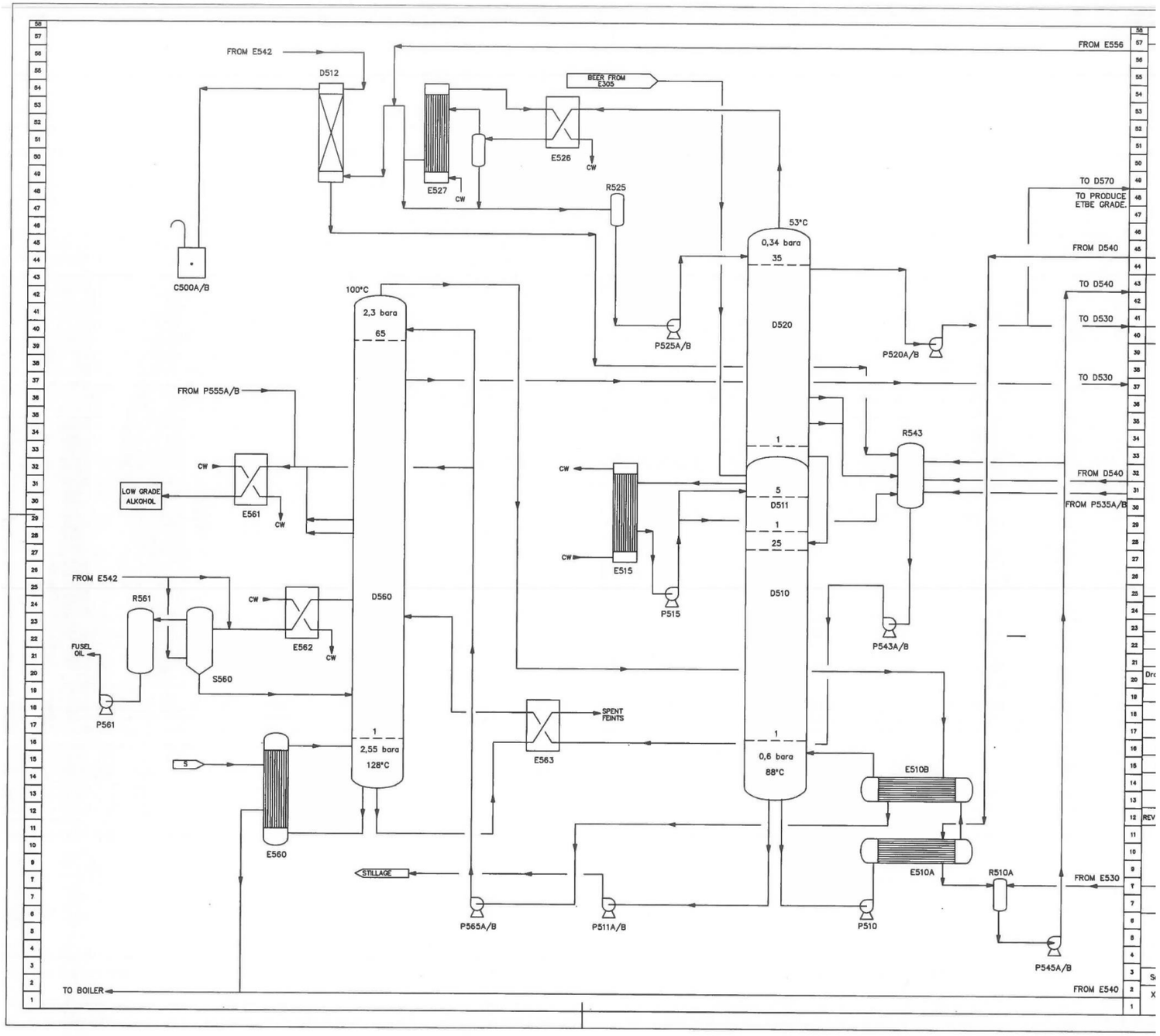

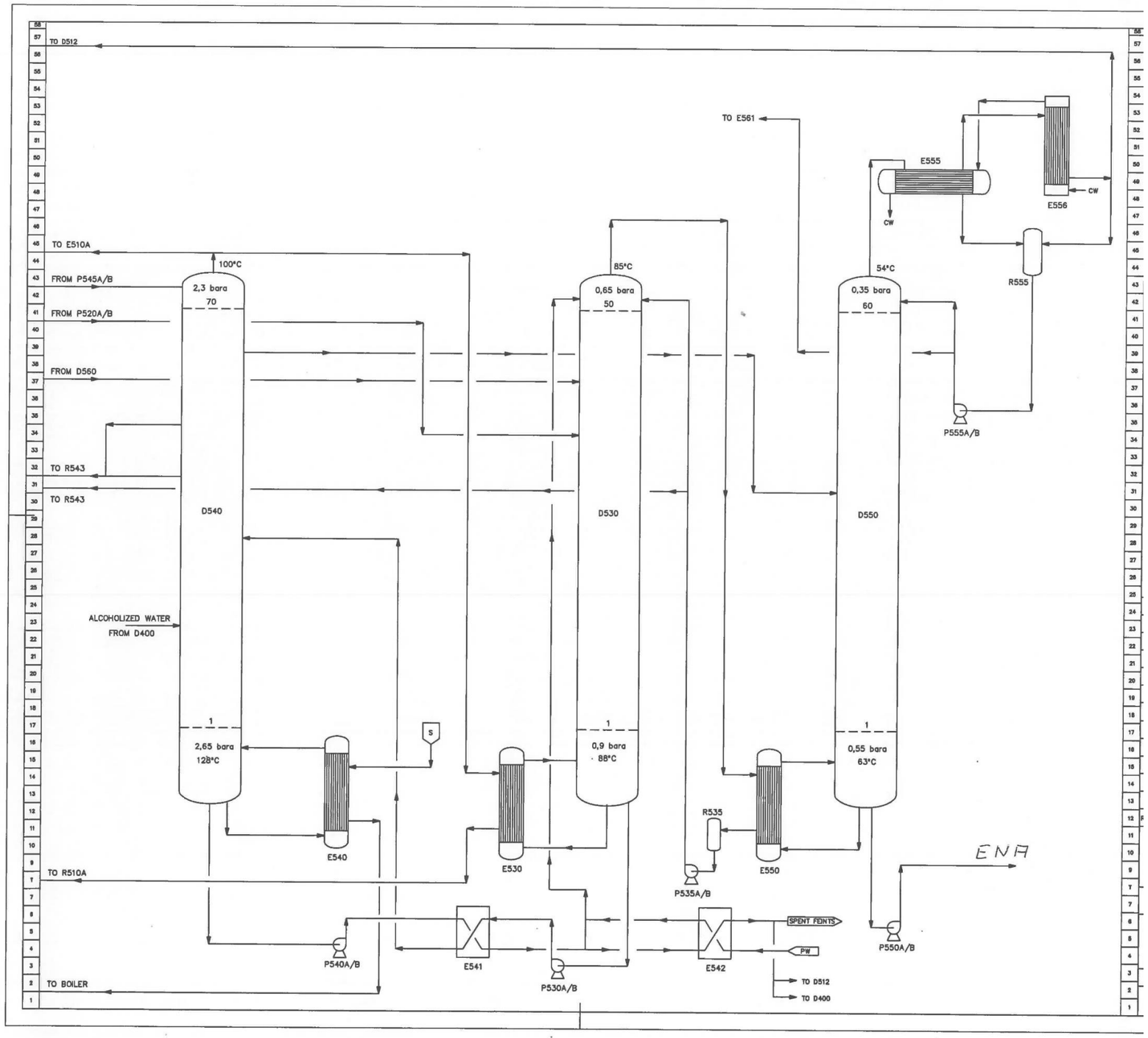
TO D512
TO E561
E555
E556
CW
CW
TO E510A
100°C
85°C
54°C
FROM P545A/B
2,3 bara
70
0,65 bara
50
0,35 bara
60
R555
FROM P520A/B
FROM D560
P555A/B
TO R543
TO R543
D540
D530
D550
ALCOHOLIZED WATER
FROM D400
1
2,65 bara
128°C
S
1
0,9 bara
88°C
1
0,55 bara
63°C
R535
E540
E530
E550
ENA
TO R510A
P535A/B
SPENT FEINTS
PW
P550A/B
P540A/B
E541
E542
P530A/B
TO BOILER
TO D512
TO D400

9 APPENDIX C - RADIANT HEAT CONTOURS

Appendix C - Radiant Heat Contours

Scenario 1: 2017 Beverage Grade Distillery Bund Fire

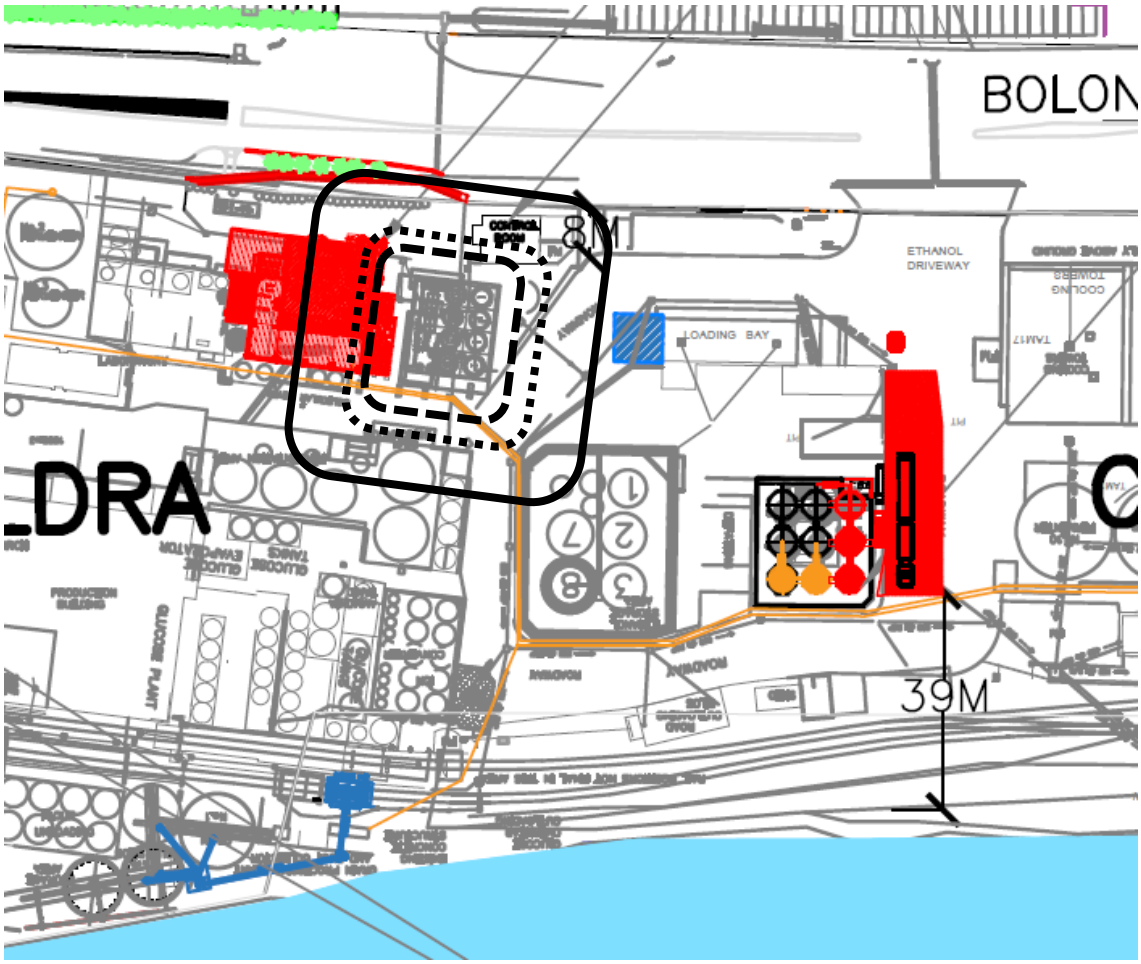

Key:

- 23 kW/m²
- 12.6 kW/m²
- 4.7 kW/m²

Scenario 2: Ethanol Storage Area Bund Fire

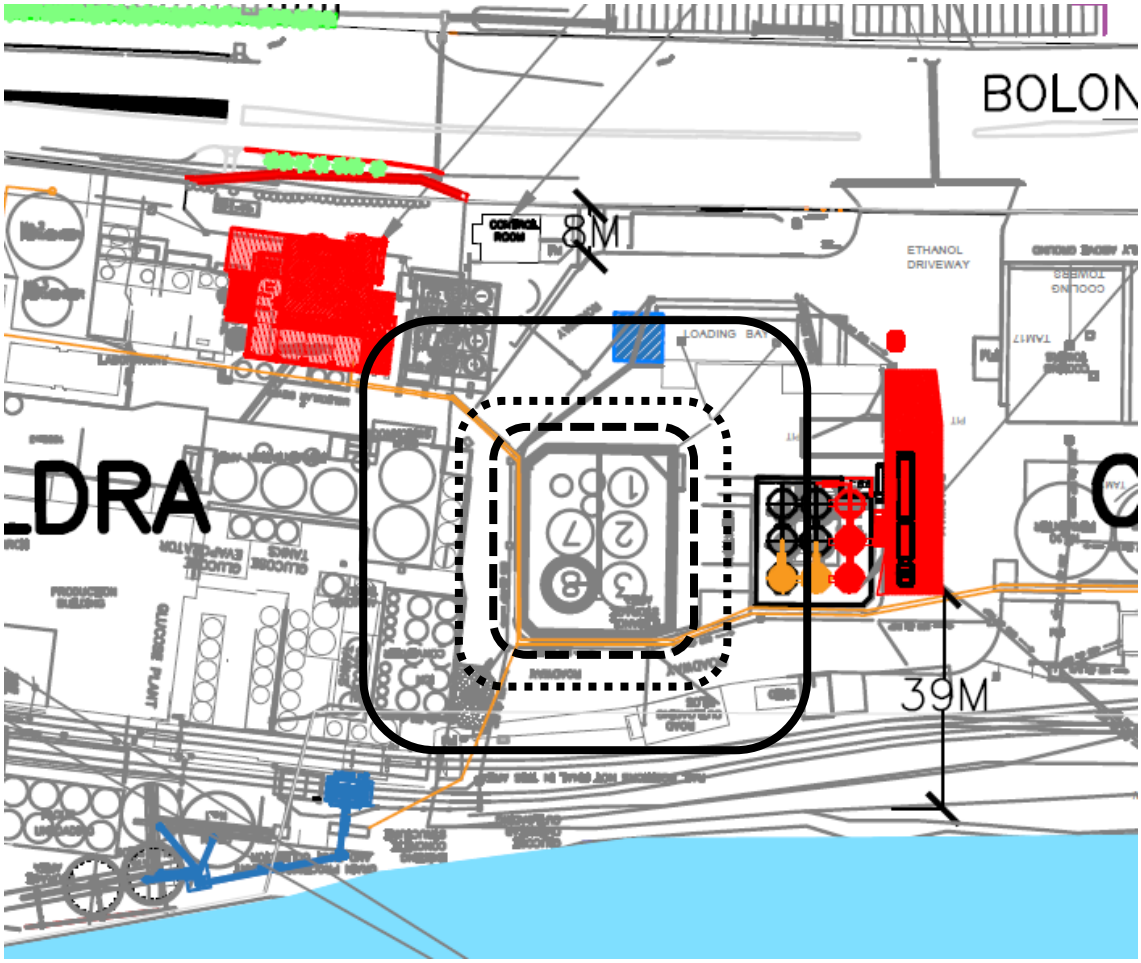

Key:

- 23 kW/m²
- 12.6 kW/m²
- 4.7 kW/m²

Scenario 3: Ethanol Day Tanks Area Bund Fire

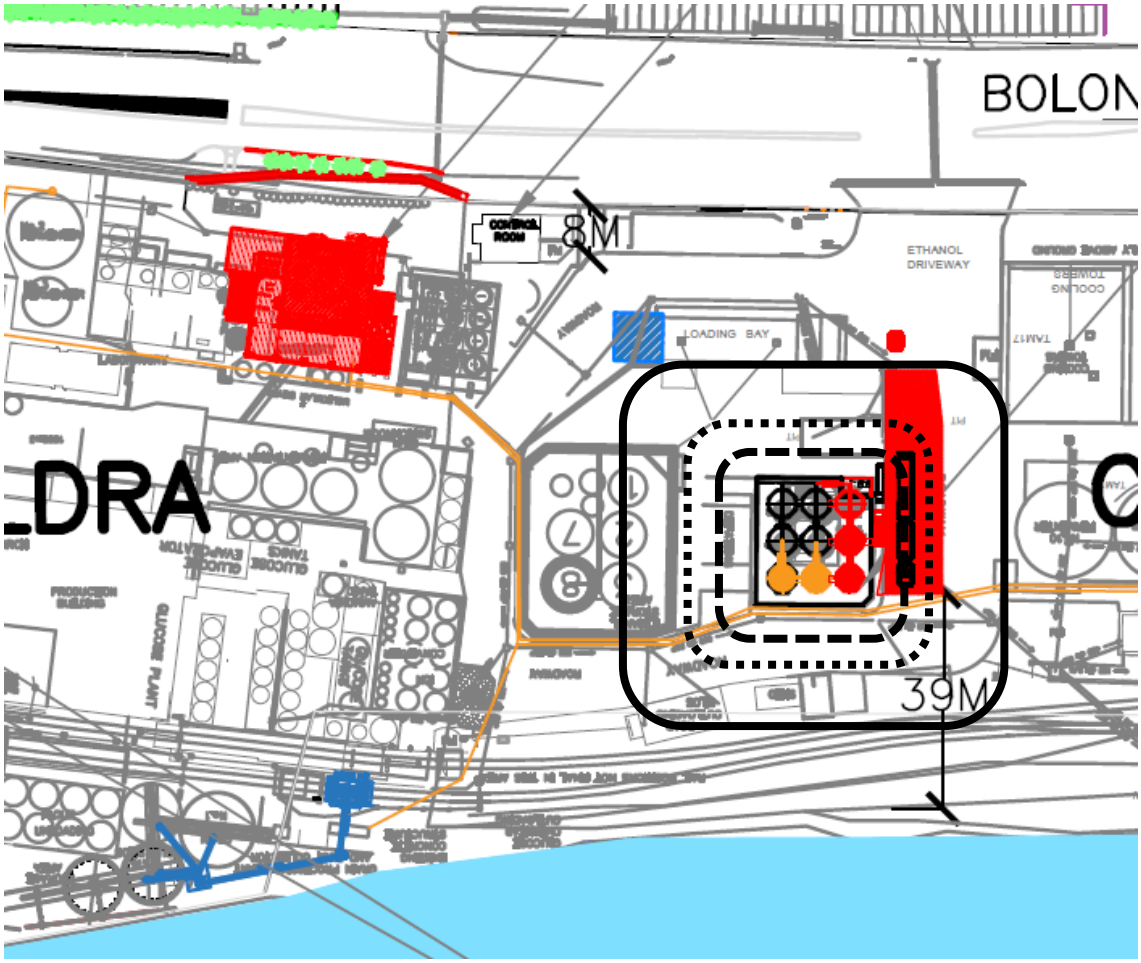

Key:

- 23 kW/m²
- 12.6 kW/m²
- 4.7 kW/m²

Scenario 4: Representative Day Tank Top Fire –240 m^3 Tank

Contours are at tank height (not ground level)

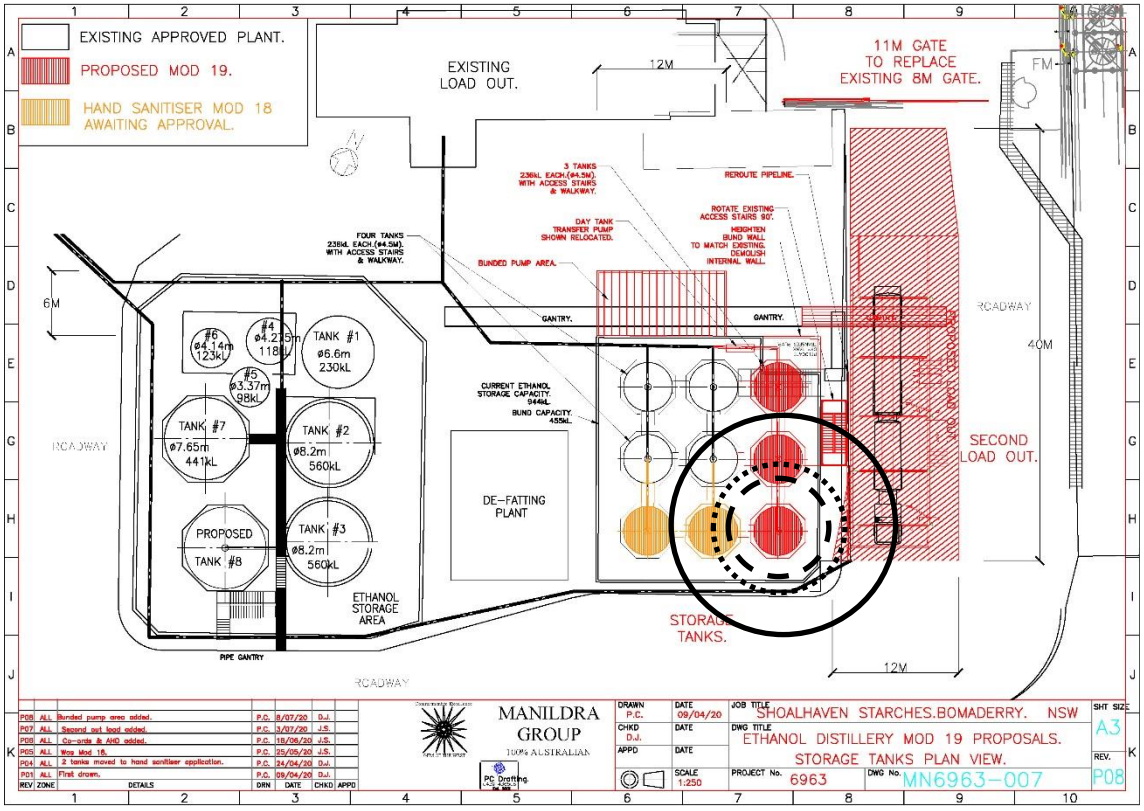

Key:

- - - - **23 kW/m^2**

..... **12.6 kW/m^2**

——— **4.7 kW/m^2**

Scenario 5: Tank Top Fire – Tank 8

Contours are at tank height (not ground level)

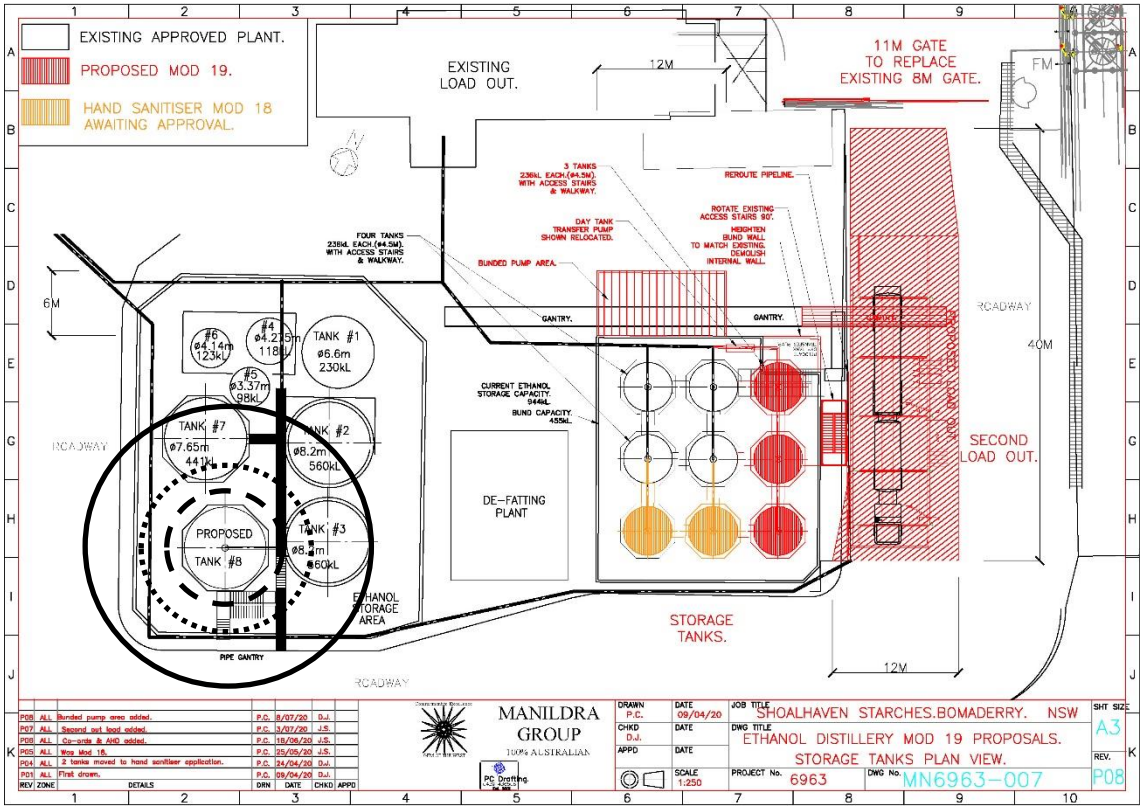

Key:

- 23 kW/m²
- 12.6 kW/m²
- 4.7 kW/m²

Scenario 6a: Ethanol Road Tanker Bay Fire (original bay)

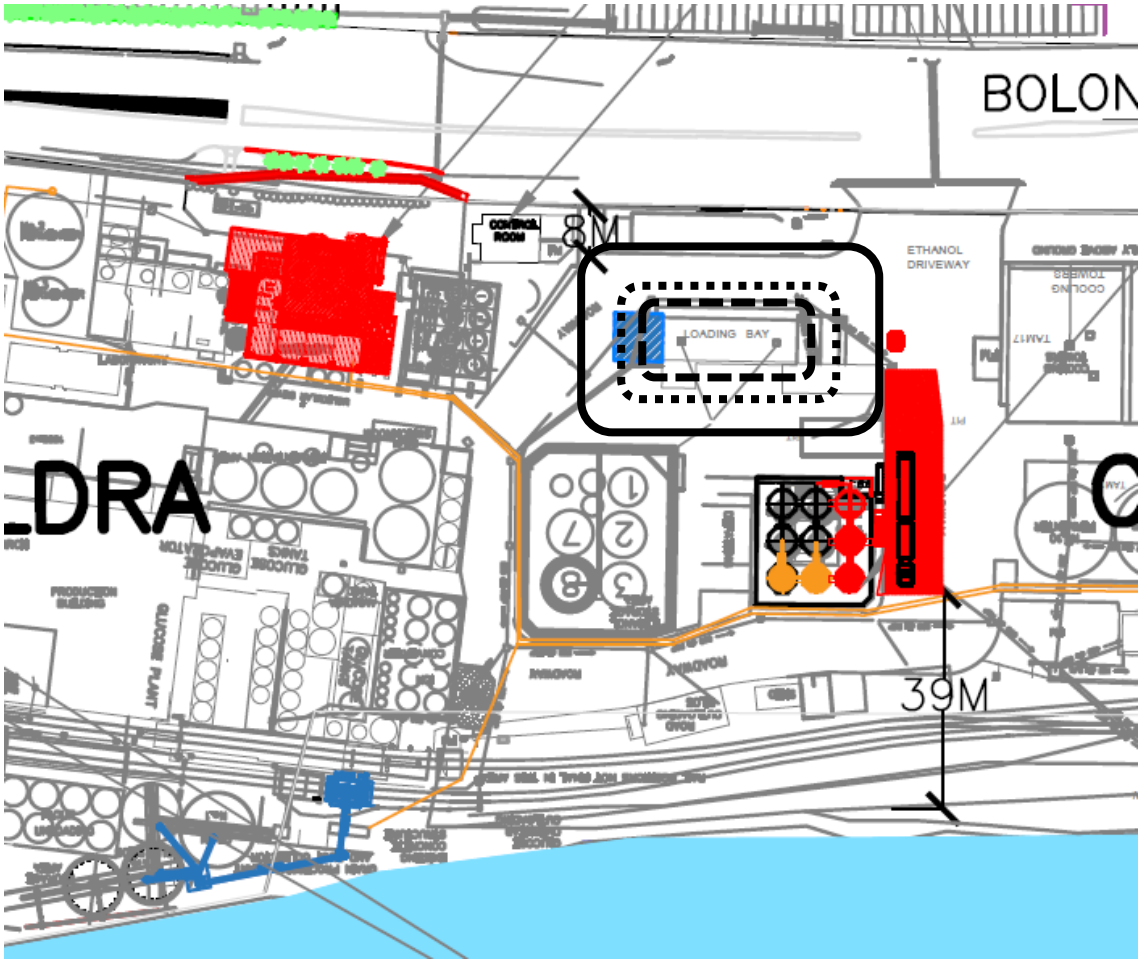

Key:

- 23 kW/m²
- 12.6 kW/m²
- 4.7 kW/m²

Scenario 6b: Ethanol Road Tanker Bay Fire (2020 second bay)

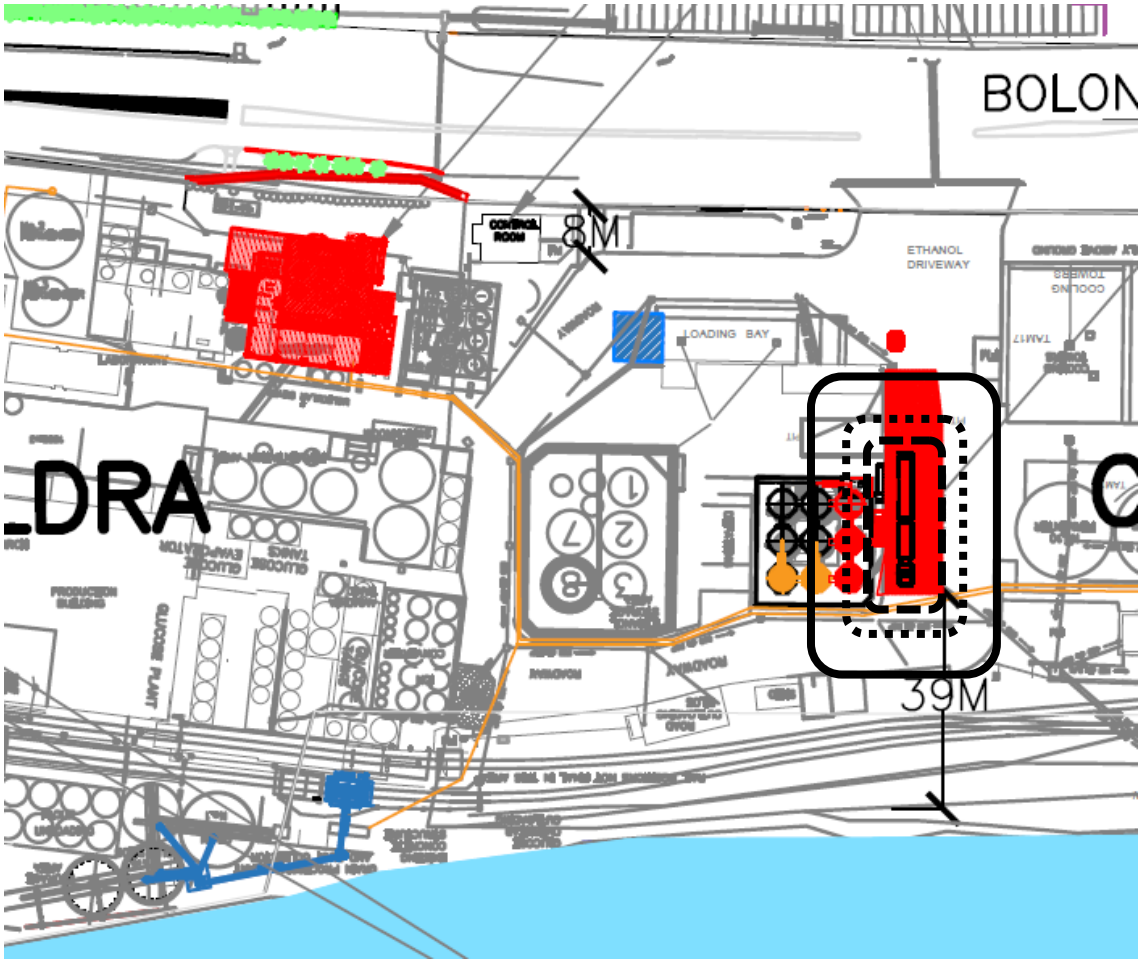

Key:

- 23 kW/m²
- 12.6 kW/m²
- 4.7 kW/m²

Scenario 7: Hand Sanitiser Building Fire

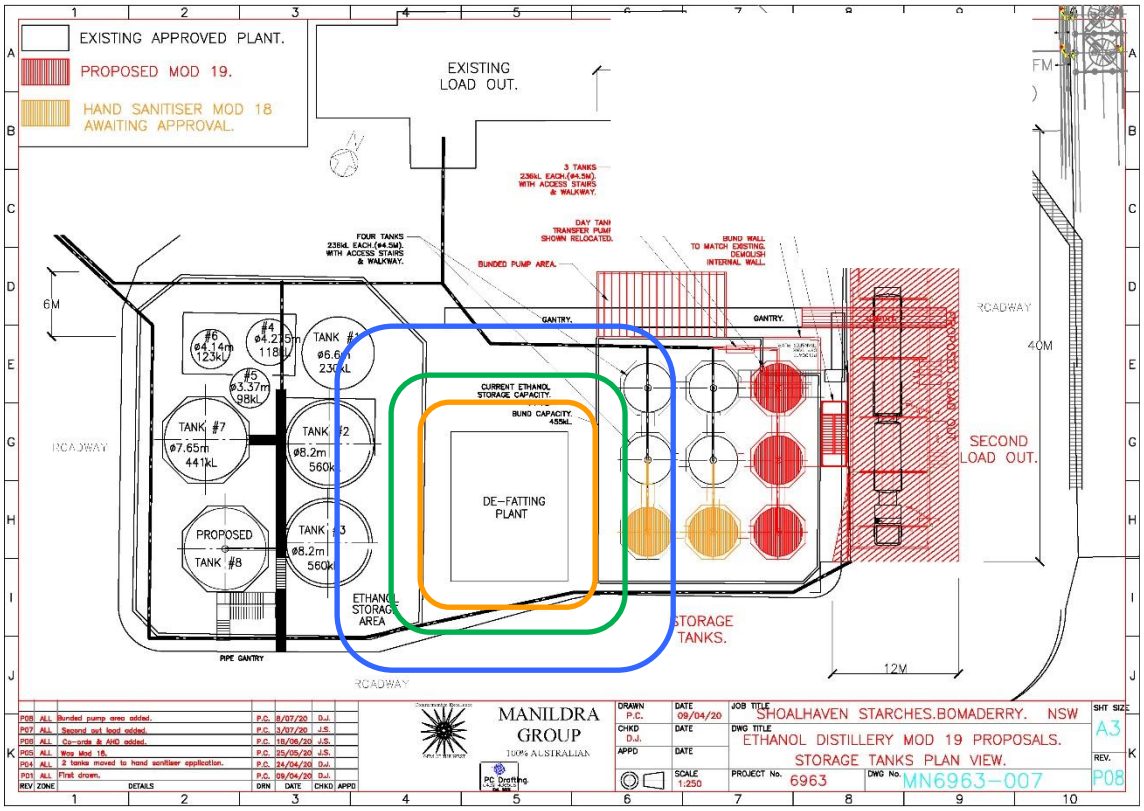

Key:

- **23 kW/m²**
- **12.6 kW/m²**
- **4.7 kW/m²**

Scenario 8: 2020 Beverage Grade Distillery Bund Fire

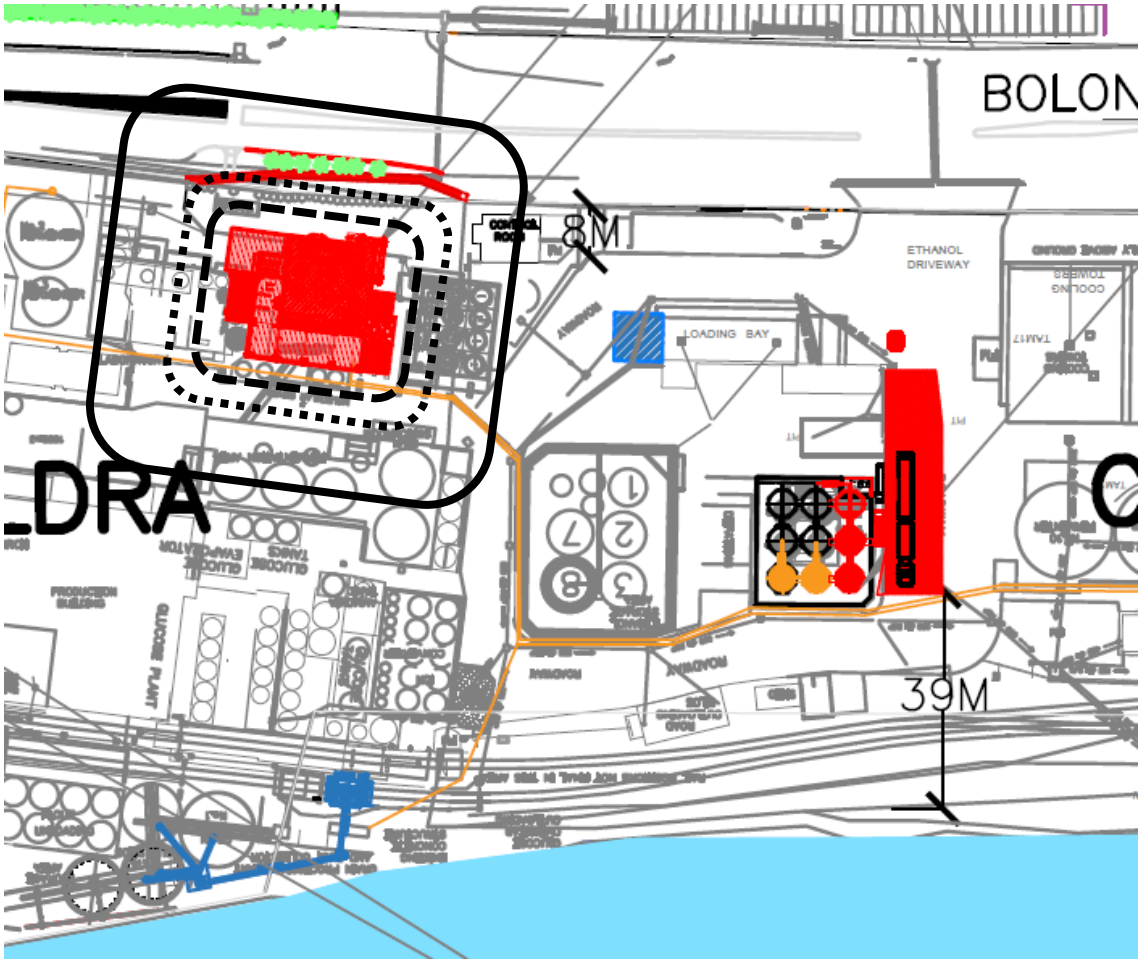

Key:

- 23 kW/m²
- 12.6 kW/m²
- 4.7 kW/m²

Scenario 9: 2020 New Pump Bund Fire

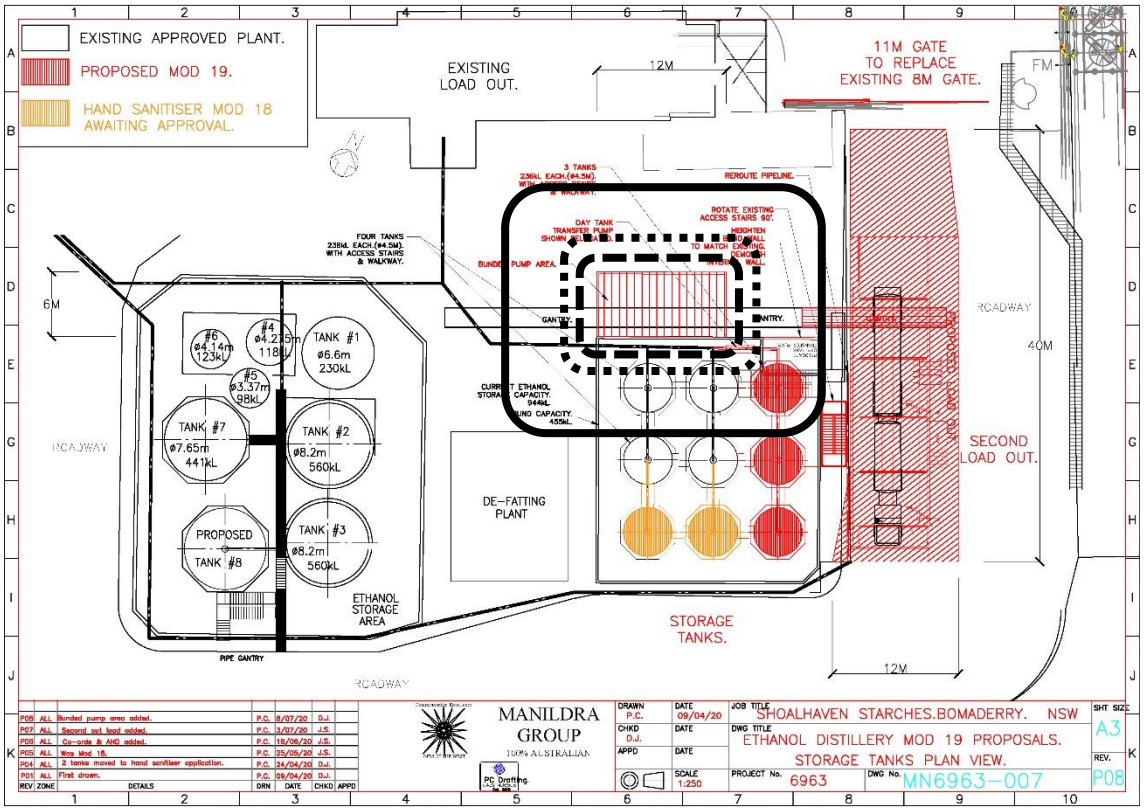

Key:

- **23 kW/m²**
- **12.6 kW/m²**
- **4.7 kW/m²**

10 APPENDIX D - METEOROLOGICAL DATA

Appendix D - Meteorological Data

The following data is a summary of climate data obtained from the Bureau of Meteorology. The data summarises the local weather / wind conditions for various atmospheric stability classes and wind directions from 2010 to 2017.

	Stability Class / Wind Speed (m/s)						
Wind Direction	Percentages:						
	A2	**B3**	**C5**	**D5**	**E3**	**F1.5**	**Totals:**
N	1.5	2.2	1.4	3.9	0.5	5.8	15.4
NE	0.5	0.7	1.4	2.7	0.2	0.2	5.6
E	0.4	0.7	2.4	3.4	0.2	0.3	7.4
SE	0.3	0.6	1.6	3.6	0.2	0.5	6.8
S	0.2	0.6	2.4	10.8	0.5	0.8	15.4
SW	0.1	0.2	0.7	4.5	0.8	1.2	7.6
W	0.2	0.8	3.8	9.9	2.0	3.8	20.6
NW	0.6	2.0	3.9	9.3	2.3	2.9	21.1
Totals:	3.9	8.0	17.7	48.1	6.9	15.5	

11 APPENDIX E – RISK ANALYSIS

Appendix E – Risk Analysis

Scenario	Vessel Failure or Hole Likelihood, times/yr	Pipe Failure Likelihood, times/yr	Pipe Length, m	Likelihood Reference	Total Likelihood, times/yr	Mass of Vapour	Ignition Probability	Ignition Probability Reference	Wind Probability	Risk of Individual Fatality (pmpy)	Comments:
50 mm Hole Vapour Release - 2020 D540 F1.5	5.00E-06	2.00E-07	40	HSE UK, Failure Rate and Event Data for use within Land Use Planning Risk Assessments, 2012 (page 23 of 106 and page 58 of 106)	1.30E-05	1 kg/s	0.01	Cox, Lees and Ang, Classification of Hazardous Locations, January 2000 (Section 15)	0.017	0.002	40 m assumed for the overheads piping (same as the 2017 PHA). F1.5 condition gives a plume angle of 90 degrees, therefore, use wind direction from the SW to the SE. The probability of fatality is assumed to be 1.0, i.e. a person within a flash fire
2017 D540 Catastrophic Failure E3 & F1.5	4.00E-06	7.00E-08	40	HSE UK, Failure Rate and Event Data for use within Land Use Planning Risk Assessments, 2012 (page 23 of 106 and page 58 of 106)	6.80E-06	250 kg	0.07	Cox, Lees and Ang, Classification of Hazardous Locations, January 2000 (Section 15)	0.027	0.013	40 m assumed for the overheads piping (same as the 2017 PHA). F1.5 condition gives a plume angle of 90 degrees, therefore, use wind direction from the SW to the SE. The probability of fatality is assumed to be 1.0, i.e. a person within a flash fire
2020 D540 Catastrophic Failure A2 to F1.5	4.00E-06	7.00E-08	40	HSE UK, Failure Rate and Event Data for use within Land Use Planning Risk Assessments, 2012 (page 23 of 106 and page 58 of 106)	6.80E-06	400 kg	0.07	Cox, Lees and Ang, Classification of Hazardous Locations, January 2000 (Section 15)	0.227	0.108	40 m assumed for the overheads piping (same as the 2017 PHA). F1.5 condition gives a plume angle of 90 degrees, therefore, use wind direction from the SW to the SE. The probability of fatality is assumed to be 1.0, i.e. a person within a flash fire
2020 D560 Catastrophic Failure F1.5	4.00E-06	7.00E-08	40	HSE UK, Failure Rate and Event Data for use within Land Use Planning Risk Assessments, 2012 (page 23 of 106 and page 58 of 106)	6.80E-06	90 kg	0.07	Cox, Lees and Ang, Classification of Hazardous Locations, January 2000 (Section 15)	0.017	0.008	40 m assumed for the overheads piping (same as the 2017 PHA). F1.5 condition gives a plume angle of 90 degrees, therefore, use wind direction from the SW to the SE. The probability of fatality is assumed to be 1.0, i.e. a person within a flash fire
									Total:	0.131	

12 REFERENCES

1 Pinnacle Risk Management, *Preliminary Hazard Analysis, Ethanol Distillery Modifications, Two New Ethanol Tanks, Boiler and Hand Sanitiser Plant, Shoalhaven Starches, Bomaderry, NSW, Consent Number: MP 06_0228 MOD 18*, 6 July 2020

2 Department of Planning and Infrastructure (NSW) *Hazardous Industry Planning Advisory Paper No 6 – Hazard Analysis,* January, 2011

3 Department of Planning and Infrastructure (NSW) *Hazardous Industry Planning Advisory Paper No 4 – Risk Criteria for Land Use Safety Planning,* January, 2011

4 Pinnacle Risk Management, *Preliminary Hazard Analysis, Proposed Modification Application to MP06-0228, Shoalhaven Starches Expansion Project, Proposed New Specialty Processing Facility, New Gluten Dryer and Other Associated Works at 22, 24 and 171 Bolong Road, Bomaderry, NSW*, 15 May 2018

5 Wingerden, Kees van, *Prediction of Pressure and Flame Effects in the Direct Surroundings of Installations Protected by Dust Explosion Venting*, 1993

6 Centre for Chemical Process Safety, *Guidelines for Chemical Process Quantitative Risk Analysis*, 2000

7 TNO, *Methods for the Calculation of Physical Effects (The Yellow Book)*, 1997

8 Lees F.P., *Loss Prevention in the Process Industries*, 3nd Edition

9 HSE, *Measurements of Burning Rate and Radiative Heat Transfer for Pools of Ethanol and Cask-Strength Whisky*, 2019

10 Technical Research Institute of Sweden, *ETANKFIRE – Experimental Results of Large Ethanol Fuel Pool Fires*, 2015

11 ICI, *Guide to Warehouse Fire Risk Assessment*

12 TNO, *Methods for the Determination of Possible Damage (The Green Book)*, 1992

13 Kletz, T., *Will Cold petrol Explode in the Open Air?*, Loss Prevention Bulletin 188

14 Lees, F P*, Loss Prevention in the Process Industries*, Third Edition

15 ICI HAZAN Course Manual, 1997

16 UK HSE, *Failure Rate and Event Data for use within Risk Assessments*, 28/06/2012

17 Cox, Lees and Ang, *Classification of Hazardous Locations*, January 2000