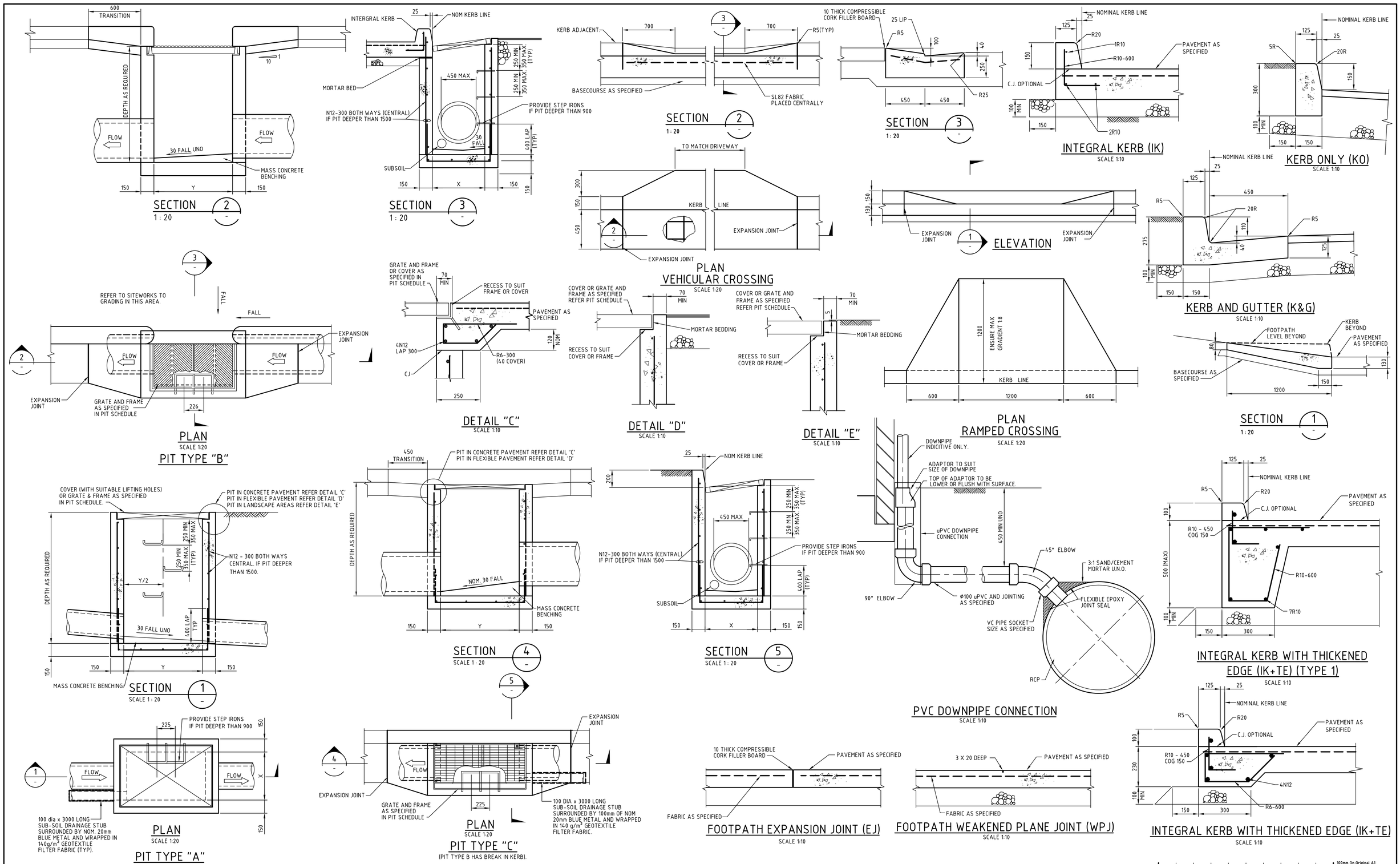

Issue	Description	Drwn	Ckd.	Appd.	Date
P2	ISSUE FOR DA	MV	MK		19.12.08
P1	ISSUE FOR INFORMATION	MV	MK		12.12.08

0 100 200 400 600 800 1000mm
1 : 10

0 500 1000 1500 2000mm
1 : 20

Status
FOR INFORMATION
NOT TO BE USED FOR CONSTRUCTION

Client
hansen yuncken
BUILDING VALUE

Scale (A1): AS SHOWN
Datum: -
Drawn: MV
Designed: MV

Project
SITE H -3 (TARGET)
ERSKINE PARK CIVIL WORKS

Title
DETAILS SHEET

Hyder
HYDER CONSULTING PTY LTD
Level 5
141 Walker St
North Sydney, NSW, 2060
ABN 76 104 485 289
Tel: +61 (0)2 8907 9000
Fax: +61 (0)2 8907 9001

Project Code: AAMK0001
Drawing No.: DA05
Issue: P2

100mm On Original A1

©