NOTES:

DETAILS SHOWN ON THESE PLANS ARE INTENDED TO BE ACCURATE - HOWEVER INFORMATION WRITTEN INTO INDIVIDUAL CONTRACTS WILL TAKE PRECEDENCE OVER PLANS

* ALL DIMENSIONS ARE IN MILLIMETRES

* DO NOT SCALE - USE WRITTEN DIMENSIONS

RAWSON HOMES PTY LTD WILL TAKE NO RESPONSIBILITY FOR ANY VERBAL DISCUSSIONS OR INSTRUCTIONS. ALL CHANGES AND SPECIAL INCLUSIONS MUST BE DOCUMENTED IN WRITING

RAWSON
HOMES
-1978-

SCHEDULE OF DRAWINGS:

ISSUE:	AMENDMENT DESCRIPTION:	DRAWN:	DATE:
A	APPLICATION PLANS (VARI. 1-24)	ST	13.11.14
B	SUBMISSION PLANS (VARI 25-45)	ST	12.01.15
C	AMENDED SUBMISSION PLANS	ST	09.04.15

SUBMISSION PLANS CDC

SIGNATURE.....

NOTES:

PLEASE NOTE: DETAILS SHOWN ON THESE PLANS ARE INTENDED TO BE ACCURATE - HOWEVER INFORMATION WRITTEN INTO INDIVIDUAL CONTRACTS WILL TAKE PRECEDENCE OVER PLANS

* ALL DIMENSIONS ARE IN MILLIMETRES
* DO NOT SCALE - USE WRITTEN DIMENSIONS
* ALL DIMENSIONS ARE TO STRUCTURAL FRAMES ONLY EXCLUDING FINISHED SURFACES

RAWSON HOMES
1 HOMEBUSH BAY DRIVE
BUILDING F, LEVEL 2, SUITE 1
RHODES NSW 2138
TELEPHONE: 02 8765 5500
FAX : 02 8765 8099
BUILDER'S LICENCE No. 33493C

CLIENT: MR WANG

SITE ADDRESS:
LOT 59, DP 1138939
SEAMIST AVENUE
ERMINGTON

HOUSETYPE:
MODEL: CUSTOM
FACADE: CLASSIC
TYPE: DOUBLE GARAGE
SPECIFICATION: LUX

DRAWING TITLE: COVER SHEET

DRAWN BY:	DATE DRAWN:	CHECKED BY:	APPROVED FOR CONSTRUCTION:
ST	13.11.14	HD/GL	

COUNCIL AREA: PARRAMATTA

SCALE: NTS

JOB No: J004351

DRWG No.: 01

ISSUE: C

B: EASEMENT FOR MAINTENANCE 0.9 WIDE
S: EASEMENT TO DRAIN WATER 1.5 WIDE

BOS

SITE SCRAPE

NOTE: CONTOURS SHOWN HAVE BEEN INTERPOLATED FROM SPOT LEVELS TAKEN ON-SITE AND ARE A REPRESENTATION OF THE TOPOGRAPHY ONLY.

DIMENSIONS SHOWN (BEARINGS & DISTANCES) HAVE BEEN DETERMINED BY LAND AND PROPERTY INFORMATION PLANS ONLY. BOUNDARIES HAVE NOT BEEN ACCURATELY DETERMINED.

SERVICES SHOWN HAVE BEEN LOCATED WHERE POSSIBLE BY FIELD SURVEY. PRIOR TO ANY SITE WORKS, THE RELEVANT AUTHORITY SHOULD BE CONTACTED TO DETERMINE EXACT POSITION OF ANY UNDERGROUND PIPES, CABLES ETC.

DIMENSIONS OF ANY TREES SHOWN ON THE PLAN ARE APPROXIMATE.

LEGEND
- KO: DENOTES KERB OUTLET
- WC,EC,TC: DENOTES SERVICE CONDUIT
- SV: DENOTES STOP VALVE
- HYD: DENOTES HYDRANT

MGA (TRUE)

SITE NOTES:
BEFORE STARTING WORK ON SITE CHECK FOLLOWING:
1. SERVICE LOCATIONS
2. SEWER CONNECTION POSTITION
3. DRIVEWAY ALIGNMENT & LEVELS

D.P ○ INDICATES DOWNPIPE LOCATION

LOCATION PLAN
UBD REF: 212, H6

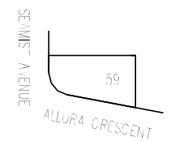

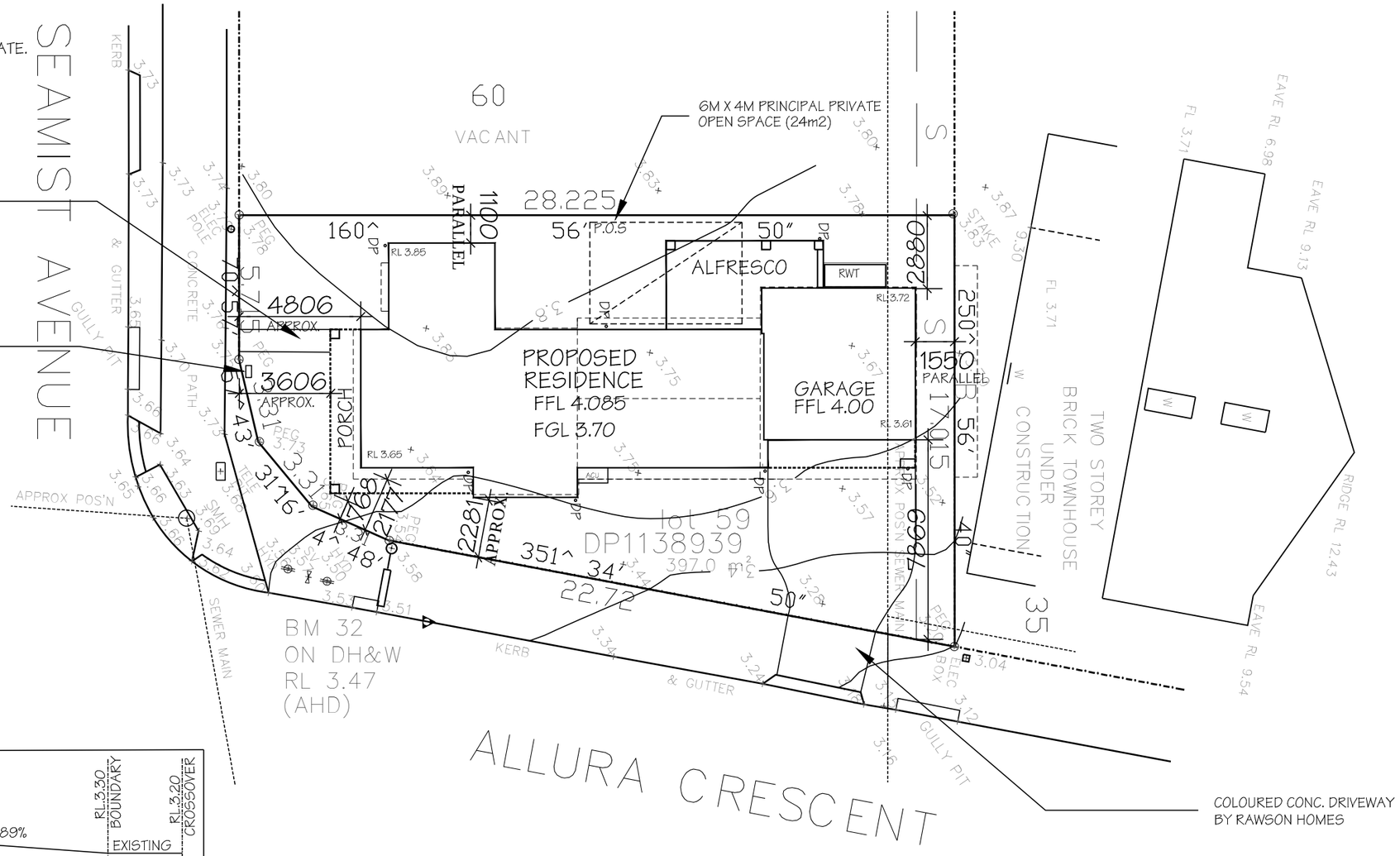

SITE CALCULATIONS CDC	
GROUND FLOOR	106.99 m²
FIRST FLOOR	139.16 m²
GARAGE	35.15 m²
TOTAL FLOOR AREA	281.30 m²
SITE AREA	397.00 m²
BUILDING FOOTPRINT (EX. UNENCLOSED AREAS)	142.14 m²
DRIVEWAY & PATH	42.03 m²
TOTAL FRONT AREA	75.30 m²
FRONT LANDSCAPE AREA (%)	44.18 %
TOTAL LANDSCAPE AREA	197.66 m²
LANDSCAPE AREA (%)	49.79 %
TOTAL SITE COVERAGE (EX. UNENCLOSED AREAS & DRIVEWAY)	35.80 %

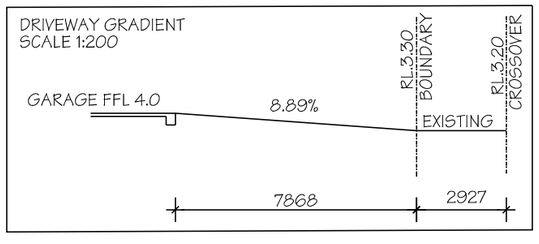

DIAL BEFORE YOU DIG
www.1100.com.au

NOTES:

PLEASE NOTE: DETAILS SHOWN ON THESE PLANS ARE INTENDED TO BE ACCURATE - HOWEVER INFORMATION WRITTEN INTO INDIVIDUAL CONTRACTS WILL TAKE PRECEDENCE OVER PLANS

* ALL DIMENSIONS ARE IN MILLIMETRES
* DO NOT SCALE - USE WRITTEN DIMENSIONS
* ALL DIMENSIONS ARE TO STRUCTURAL FRAMES ONLY EXCLUDING FINISHED SURFACES

RAWSON HOMES
1 HOMEBUSH BAY DRIVE
BUILDING F, LEVEL 2, SUITE 1
RHODES NSW 2138
TELEPHONE: 02 8765 5500
FAX : 02 8765 8099
BUILDER'S LICENCE No. 33493C

CLIENT: MR WANG

SITE ADDRESS:
LOT 59, DP 1138939
SEAMIST AVENUE
ERMINGTON

HOUSETYPE:
MODEL: CUSTOM
FACADE: CLASSIC
TYPE: DOUBLE GARAGE
SPECIFICATION: LUX

DRAWING TITLE: SITE PLAN

DRAWN BY:	DATE DRAWN:	CHECKED BY:	APPROVED FOR CONSTRUCTION:
ST	13.11.14	HD/GL	

COUNCIL AREA:	SCALE:
PARRAMATTA	1:200

JOB No:	DRWG No.:	ISSUE:
J004351	02	C

720 LIFT OFF HINGE TO WC

AC DUCTING WHEN APPLICABLE

HEIGHT OF ALL SQ. SETS 2400mm FROM FL UNLESS OTHERWISE SHOWN

HEIGHT OF ALL INTERNAL DOORS 2340mm FROM FFL TO GROUND FLOOR ONLY (EXCLUDES ROBES, LINEN & PANTRY)

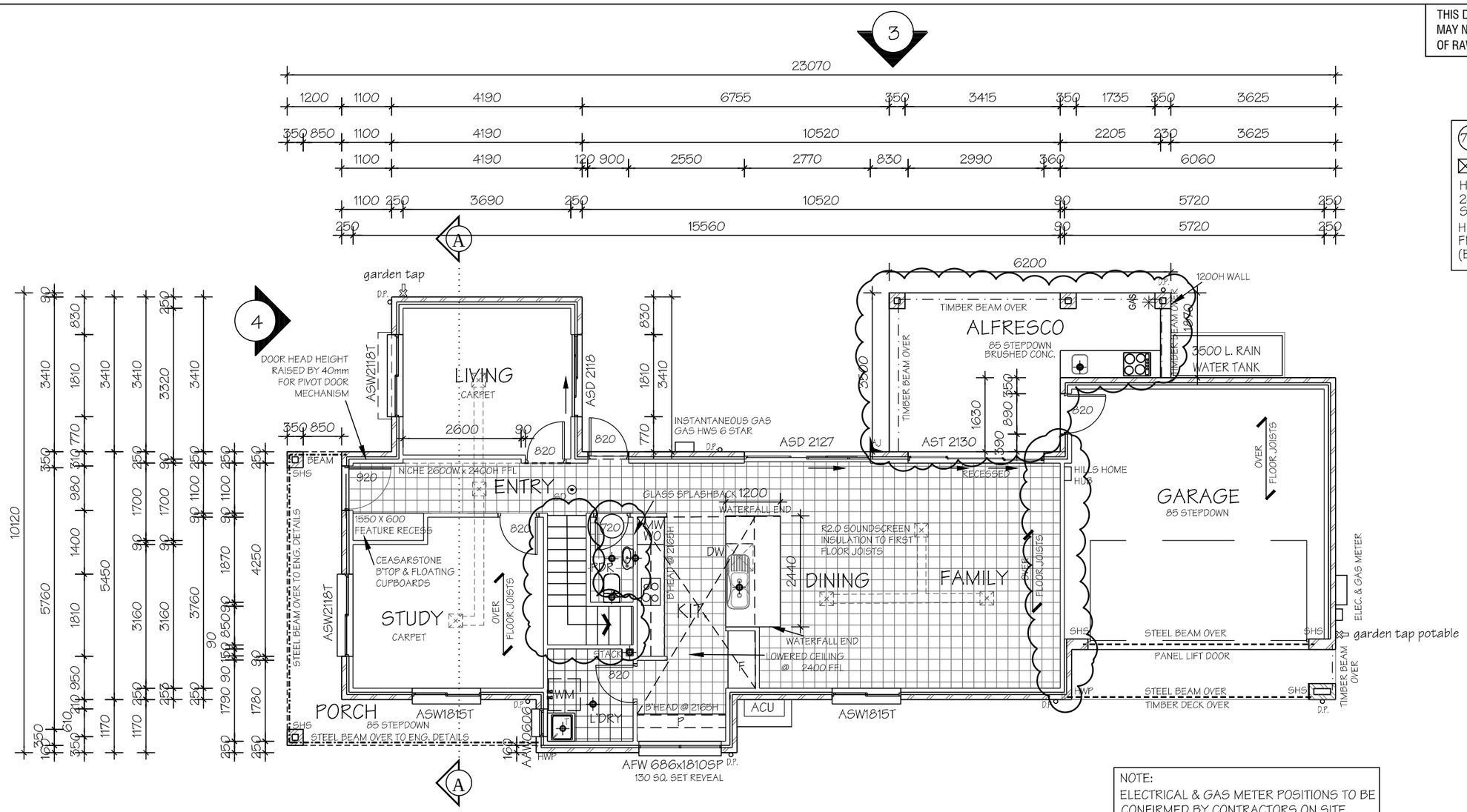

NOTE:
ELECTRICAL & GAS METER POSITIONS TO BE CONFIRMED BY CONTRACTORS ON SITE

FRAME-MAKER'S NOTE
* WIND CLASSIFICATION -N2 33 metres/per second
* WINDOW OPENING SIZES TO BE CHECKED BEFORE FRAMES ARE CONSTRUCTED
* FRAMES AND TRUSSES TO SATISFY AS 1684 SAA TIMBER FRAMING CODE

AREAS SCHEDULE:

TOTAL SITE AREA	:	397.0 m²
GROUND FLOOR LIVING	:	106.33 m²
FIRST FLOOR LIVING	:	139.16 m²
TOTAL LIVING	:	246.15 m²
PORCH	:	12.07 m²
GARAGE	:	35.80 m²
DECK 1	:	6.56 m²
DECK 2	:	12.5 m²
ALFRESCO	:	17.73 m²
GRAND TOTAL	:	330.16 m²

NOTES:

PLEASE NOTE: DETAILS SHOWN ON THESE PLANS ARE INTENDED TO BE ACCURATE - HOWEVER INFORMATION WRITTEN INTO INDIVIDUAL CONTRACTS WILL TAKE PRECEDENCE OVER PLANS

* ALL DIMENSIONS ARE IN MILLIMETRES
* DO NOT SCALE - USE WRITTEN DIMENSIONS
* ALL DIMENSIONS ARE TO STRUCTURAL FRAMES ONLY EXCLUDING FINISHED SURFACES

RAWSON HOMES
1 HOMEBUSH BAY DRIVE
BUILDING F, LEVEL 2, SUITE 1
RHODES NSW 2138
TELEPHONE: 02 8765 5500
FAX : 02 8765 8099
BUILDER'S LICENCE No. 33493C

CLIENT: MR WANG

SITE ADDRESS: LOT 59, DP 1138939 SEAMIST AVENUE ERMINGTON

HOUSETYPE:
MODEL: CUSTOM
FACADE: CLASSIC
TYPE: DOUBLE GARAGE
SPECIFICATION: LUX

DRAWING TITLE: GROUND FLOOR PLAN

DRAWN BY:	DATE DRAWN:	CHECKED BY:	APPROVED FOR CONSTRUCTION:
ST	13.11.14	HD/GL	

COUNCIL AREA: PARRAMATTA

SCALE: 1:100

JOB No: J004351

DRWG No.: 03

ISSUE: C

720 LIFT OFF HINGE TO WC
-AC DUCTING
-WHEN APPLICABLE
HEIGHT OF ALL SQ. SETS 2150mm FROM FL UNLESS OTHERWISE SHOWN

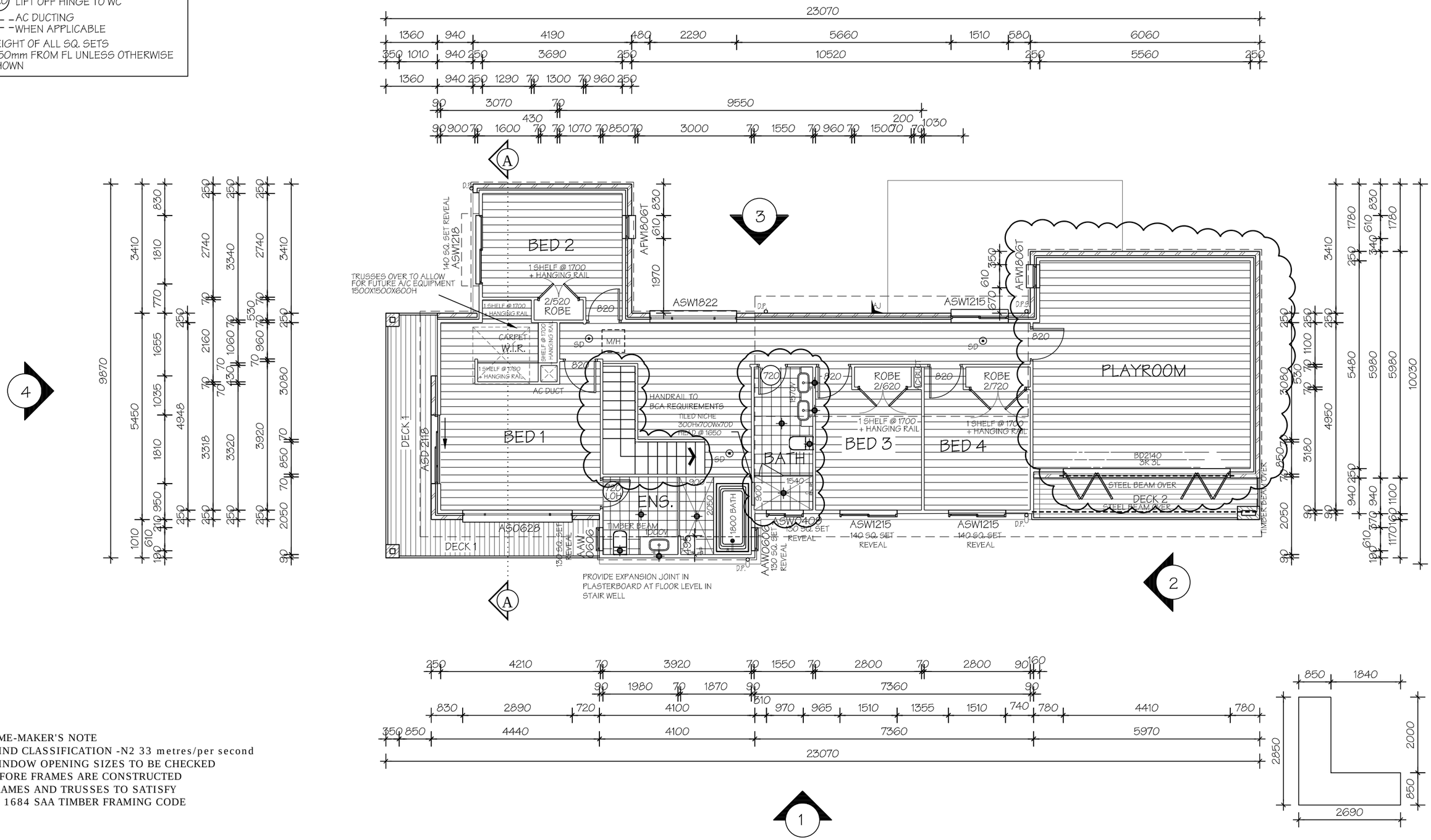

FRAME-MAKER'S NOTE
* WIND CLASSIFICATION -N2 33 metres/per second
* WINDOW OPENING SIZES TO BE CHECKED BEFORE FRAMES ARE CONSTRUCTED
* FRAMES AND TRUSSES TO SATISFY AS 1684 SAA TIMBER FRAMING CODE

NOTES:

PLEASE NOTE: DETAILS SHOWN ON THESE PLANS ARE INTENDED TO BE ACCURATE - HOWEVER INFORMATION WRITTEN INTO INDIVIDUAL CONTRACTS WILL TAKE PRECEDENCE OVER PLANS

* ALL DIMENSIONS ARE IN MILLIMETRES
* DO NOT SCALE - USE WRITTEN DIMENSIONS
* ALL DIMENSIONS ARE TO STRUCTURAL FRAMES ONLY EXCLUDING FINISHED SURFACES

RAWSON HOMES
1 HOMEBUSH BAY DRIVE
BUILDING F, LEVEL 2, SUITE 1
RHODES NSW 2138
TELEPHONE: 02 8765 5500
FAX : 02 8765 8099
BUILDER'S LICENCE No. 33493C

CLIENT: MR WANG	HOUSETYPE:	DRAWN BY: ST	DATE DRAWN: 13.11.14	CHECKED BY: HD/GL	APPROVED FOR CONSTRUCTION:
SITE ADDRESS: LOT 59, DP 1138939 SEAMIST AVENUE ERMINGTON	MODEL: CUSTOM FACADE: CLASSIC TYPE: DOUBLE GARAGE SPECIFICATION: LUX	COUNCIL AREA: PARRAMATTA		SCALE: 1:100	
	DRAWING TITLE: FIRST FLOOR PLAN	JOB No: J004351		DRWG No.: 04	ISSUE: C

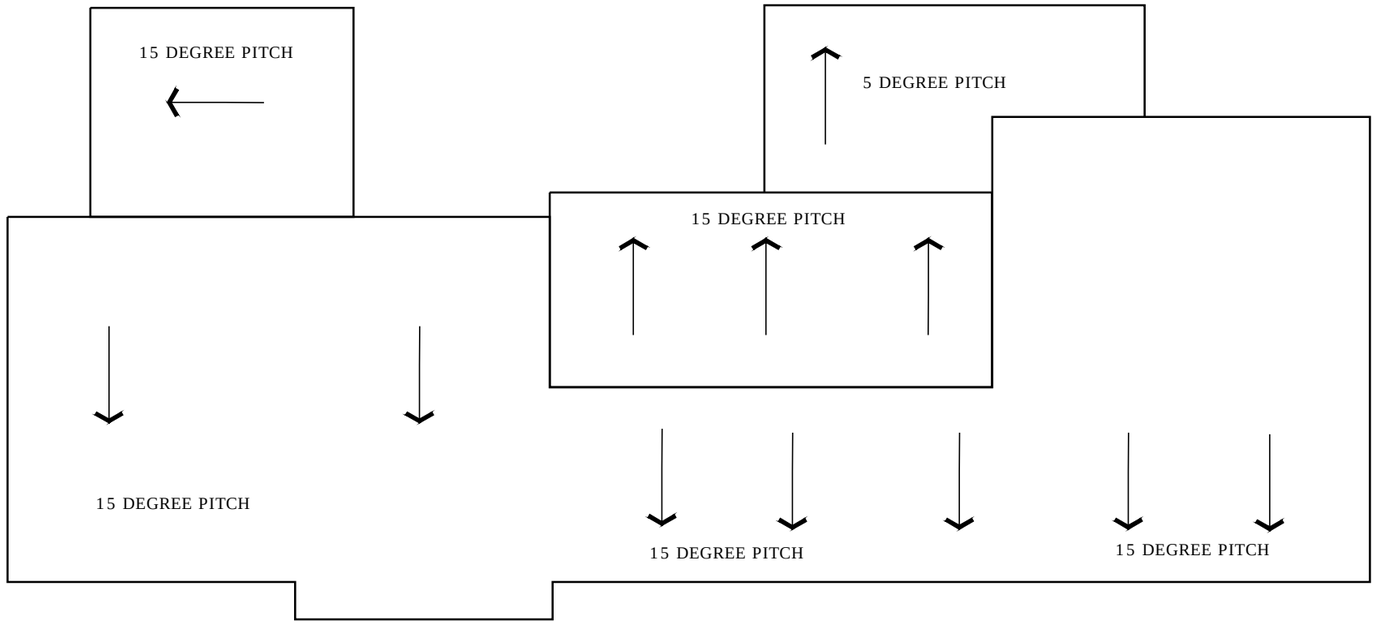

NOTES:

PLEASE NOTE: DETAILS SHOWN ON THESE PLANS ARE INTENDED TO BE ACCURATE - HOWEVER INFORMATION WRITTEN INTO INDIVIDUAL CONTRACTS WILL TAKE PRECEDENCE OVER PLANS

* ALL DIMENSIONS ARE IN MILLIMETRES
* DO NOT SCALE - USE WRITTEN DIMENSIONS
* ALL DIMENSIONS ARE TO STRUCTURAL FRAMES ONLY EXCLUDING FINISHED SURFACES

RAWSON HOMES
1 HOMEBUSH BAY DRIVE
BUILDING F, LEVEL 2, SUITE 1
RHODES NSW 2138
TELEPHONE: 02 8765 5500
FAX : 02 8765 8099
BUILDER'S LICENCE No. 33493C

CLIENT: MR WANG

SITE ADDRESS:
LOT 59, DP 1138939
SEAMIST AVENUE
ERMINGTON

HOUSETYPE:
MODEL: CUSTOM
FACADE: CLASSIC
TYPE: DOUBLE GARAGE
SPECIFICATION: LUX

DRAWING TITLE: ROOF PLAN

DRAWN BY:	DATE DRAWN:	CHECKED BY:	APPROVED FOR CONSTRUCTION:
ST	13.11.14	HD/GL	

COUNCIL AREA: PARRAMATTA

SCALE: 1:100

JOB No: J004351

DRWG No.: 05

ISSUE: C

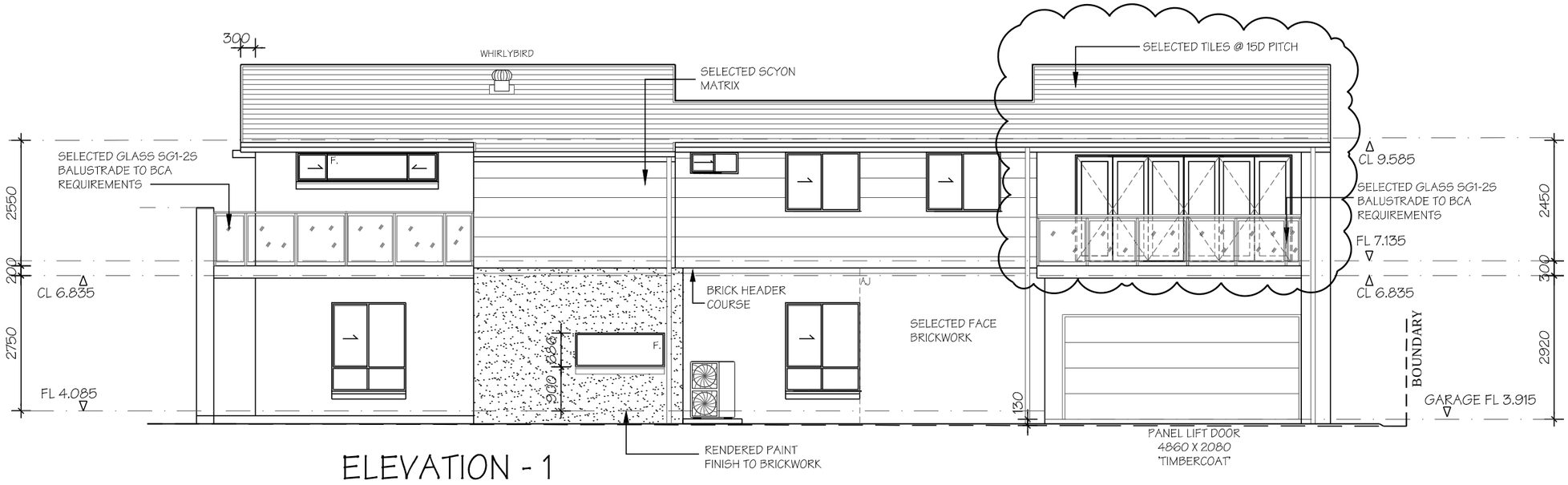

ELEVATION - 1

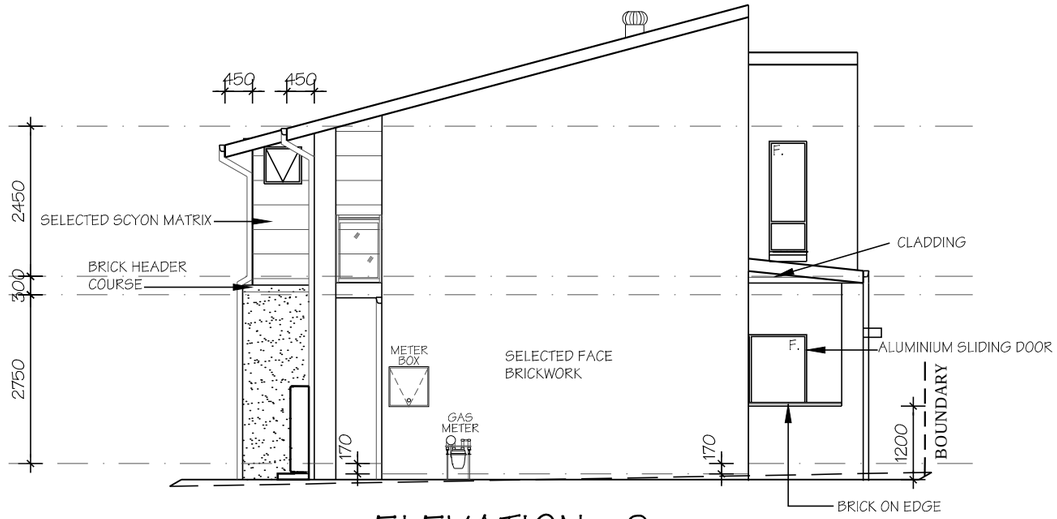

ELEVATION - 2

NOTE:
NYLON MESH FLYSCREENS TO ALL OPENING WINDOWS, SLIDING & STACKER DOORS (EXCLUDING HINGED DOORS)

NOTE :
* WINDOWS TO BE POSITIONED @ 2150H OR DIRECTLY UNDER EAVES WHERE APPLICABLE (UNLESS OTHERWISE NOTED).
* FLYSCREENS TO ALL WINDOWS ONLY
* GARAGE DOOR HEAD HEIGHT @ 2150

NOTES:

PLEASE NOTE: DETAILS SHOWN ON THESE PLANS ARE INTENDED TO BE ACCURATE - HOWEVER INFORMATION WRITTEN INTO INDIVIDUAL CONTRACTS WILL TAKE PRECEDENCE OVER PLANS

* ALL DIMENSIONS ARE IN MILLIMETRES
* DO NOT SCALE - USE WRITTEN DIMENSIONS
* ALL DIMENSIONS ARE TO STRUCTURAL FRAMES ONLY EXCLUDING FINISHED SURFACES

RAWSON HOMES
1 HOMEBUSH BAY DRIVE
BUILDING F, LEVEL 2, SUITE 1
RHODES NSW 2138
TELEPHONE: 02 8765 5500
FAX : 02 8765 8099
BUILDER'S LICENCE No. 33493C

CLIENT: MR WANG

SITE ADDRESS:
LOT 59, DP 1138939
SEAMIST AVENUE
ERMINGTON

HOUSETYPE:
MODEL: CUSTOM
FACADE: CLASSIC
TYPE: DOUBLE GARAGE
SPECIFICATION: LUX

DRAWING TITLE: ELEVATIONS 1

DRAWN BY:	DATE DRAWN:	CHECKED BY:	APPROVED FOR CONSTRUCTION:
ST	13.11.14	HD/GL	

COUNCIL AREA:	SCALE:
PARRAMATTA	1:100

JOB No:	DRWG No.:	ISSUE:
J004351	06	C

NOTE:
NYLON MESH FLYSCREENS TO ALL OPENING WINDOWS, SLIDING & STACKER DOORS (EXCLUDING HINGED DOORS)

NOTE :
* WINDOWS TO BE POSITIONED @ 2150H OR DIRECTLY UNDER EAVES WHERE APPLICABLE (UNLESS OTHERWISE NOTED).
* FLYSCREENS TO ALL WINDOWS ONLY
* GARAGE DOOR HEAD HEIGHT @ 2150

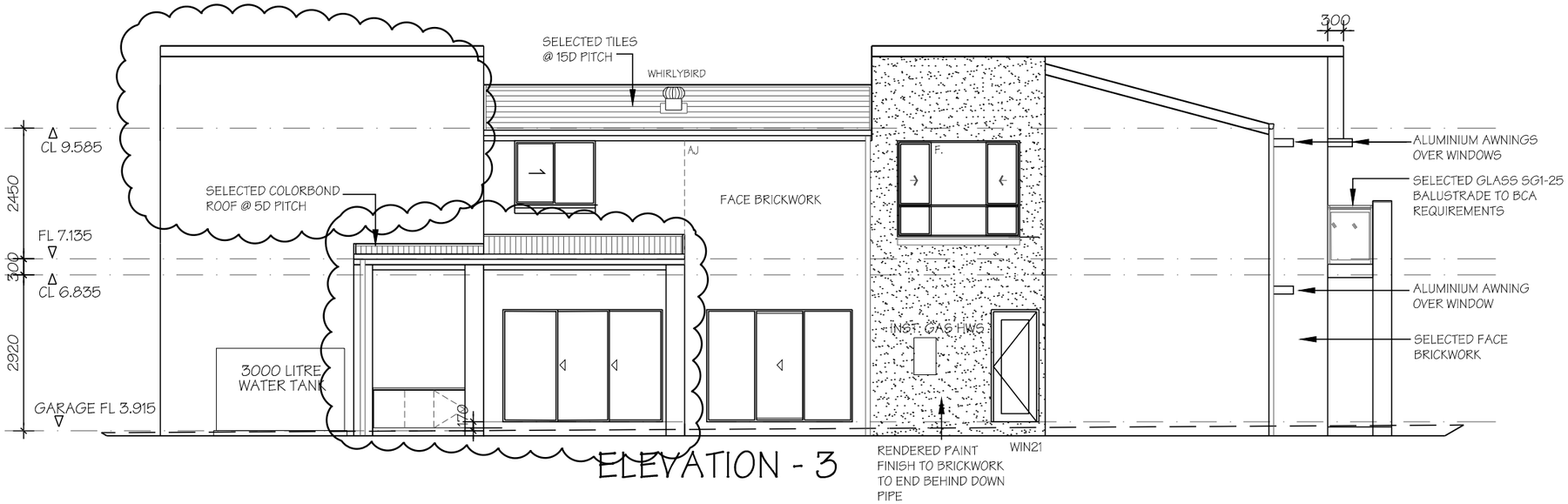

ELEVATION - 3

ELEVATION - 4

NOTES:

PLEASE NOTE: DETAILS SHOWN ON THESE PLANS ARE INTENDED TO BE ACCURATE - HOWEVER INFORMATION WRITTEN INTO INDIVIDUAL CONTRACTS WILL TAKE PRECEDENCE OVER PLANS

* ALL DIMENSIONS ARE IN MILLIMETRES
* DO NOT SCALE - USE WRITTEN DIMENSIONS
* ALL DIMENSIONS ARE TO STRUCTURAL FRAMES ONLY EXCLUDING FINISHED SURFACES

RAWSON HOMES
1 HOMEBUSH BAY DRIVE
BUILDING F, LEVEL 2, SUITE 1
RHODES NSW 2138
TELEPHONE: 02 8765 5500
FAX : 02 8765 8099
BUILDER'S LICENCE No. 33493C

CLIENT: MR WANG	HOUSETYPE:	DRAWN BY: ST	DATE DRAWN: 13.11.14	CHECKED BY: HD/GL	APPROVED FOR CONSTRUCTION:
SITE ADDRESS: LOT 59, DP 1138939 SEAMIST AVENUE ERMINGTON	MODEL: CUSTOM FACADE: CLASSIC TYPE: DOUBLE GARAGE SPECIFICATION: LUX	COUNCIL AREA: PARRAMATTA		SCALE: 1:100	
	DRAWING TITLE: ELEVATIONS 2	JOB No: J004351		DRWG No.: 07	ISSUE: C

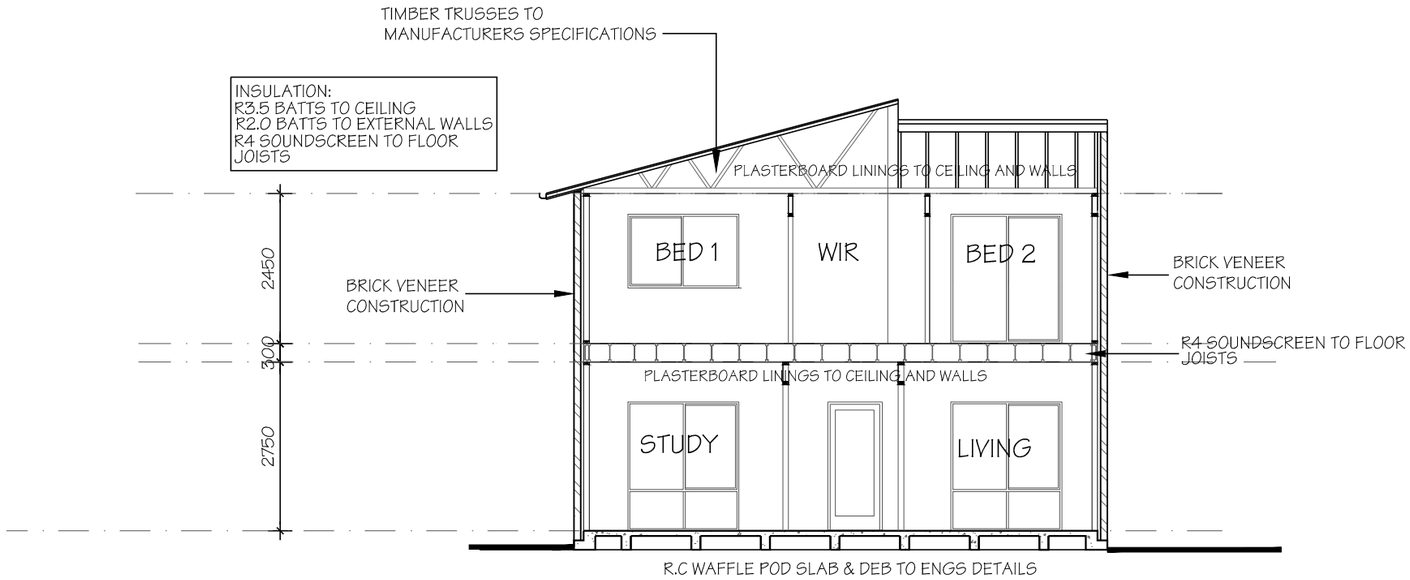

SECTION A -A

RAINWATER TANK

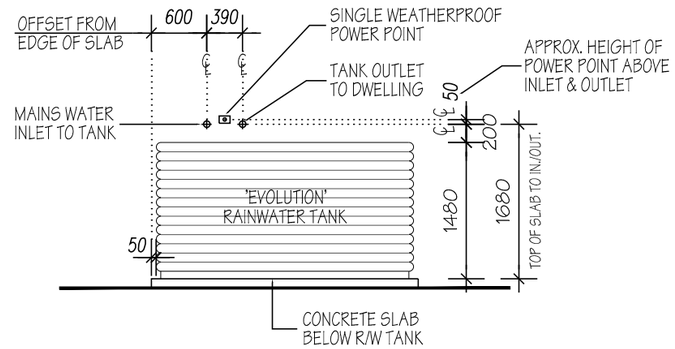

NOTE:
DETAIL NOT TO SCALE

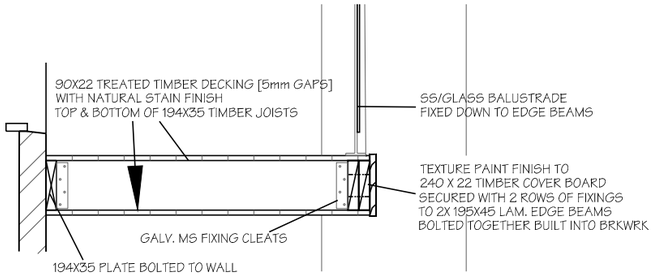

SECTION THROUGH DECK

BASIX COMMITMENTS

PROJECT DETAILS			RAINWATER	ENERGY	COOKING (KITCHEN APPLIANCES)
Site area	397	m2	Rainwater tank capacity of 3500L to collect rain runoff of at least 90m² of the roof	ACTIVE COOLING/HEATING	Install a gas cooktop and electric oven
Roof area	180	m2	area & connected to all toilets, cold water taps connected to clothes washers & at	Provide fully ducted reverse cycle 3 phase air conditioner with EER rating of 2.5-3.0 for cooling	DESIGN ENHANCEMENTS
number of bedrooms	4		least one outdoor tap on development.	Provide fully ducted reverse cycle 3 phase air conditioner with EER rating of 3.0-3.5 for heating	Install an outdoor clothes drying line
Total area of vegetation (garden & lawn)	198	m2	WATER	Provide day/night zoning between living areas and bedrooms	INSULATION
ABSA Certificate Number (if applicable)	1007335571		All showers with in the development are to have a minimum rating of 3 star showheads	VENTILATION	External wall R2.0 [excluding garage]
Net conditioned floor area	207	m2	Each toilet is to have a flushing system of no less than a 4 star rating	Exhaust systems to kitchen and at least 1 bathroom with manual switch on/off ducted to roof or facade.	Ceiling R3.5 [excluding garage]
Net unconditioned floor area	10	m2	All taps in the kitchen and bathrooms are to have a minimum rating of 3 star	Natural Ventilation to laundry.	
Cooling load (if applicable)	36	MJ/m2/pa	HOT WATER	LIGHTING	
Heating load (if applicable)	47	MJ/m2/pa	Gas Instantaneous hot water system with a performance of 6 stars	Provide window(s) and/or skylight to 3 bathroom(s) / toilet(s) and kitchen.	

NOTES:

PLEASE NOTE: DETAILS SHOWN ON THESE PLANS ARE INTENDED TO BE ACCURATE - HOWEVER INFORMATION WRITTEN INTO INDIVIDUAL CONTRACTS WILL TAKE PRECEDENCE OVER PLANS

* ALL DIMENSIONS ARE IN MILLIMETRES
* DO NOT SCALE - USE WRITTEN DIMENSIONS
* ALL DIMENSIONS ARE TO STRUCTURAL FRAMES ONLY EXCLUDING FINISHED SURFACES

RAWSON HOMES
1 HOMEBUSH BAY DRIVE
BUILDING F, LEVEL 2, SUITE 1
RHODES NSW 2138
TELEPHONE: 02 8765 5500
FAX : 02 8765 8099
BUILDER'S LICENCE No. 33493C

CLIENT: MR WANG

SITE ADDRESS:
LOT 59, DP 1138939
SEAMIST AVENUE
ERMINGTON

HOUSETYPE:
MODEL: CUSTOM
FACADE: CLASSIC
TYPE: DOUBLE GARAGE
SPECIFICATION: LUX

DRAWING TITLE: SECTION

DRAWN BY:	DATE DRAWN:	CHECKED BY:	APPROVED FOR CONSTRUCTION:
ST	13.11.14	HD/GL	

COUNCIL AREA:	SCALE:
PARRAMATTA	1:100

JOB No:	DRWG No.:	ISSUE:
J004351	08	C

REFER TO ELBA KITCHENS FOR DETAILS

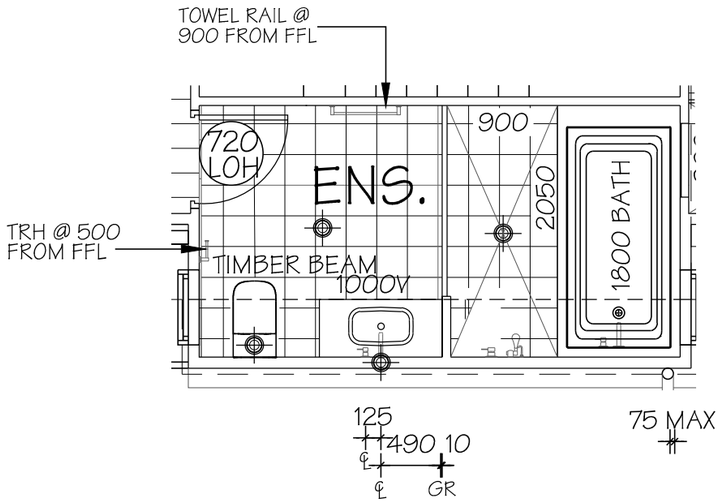

BED 1 ENSUITE PLAN

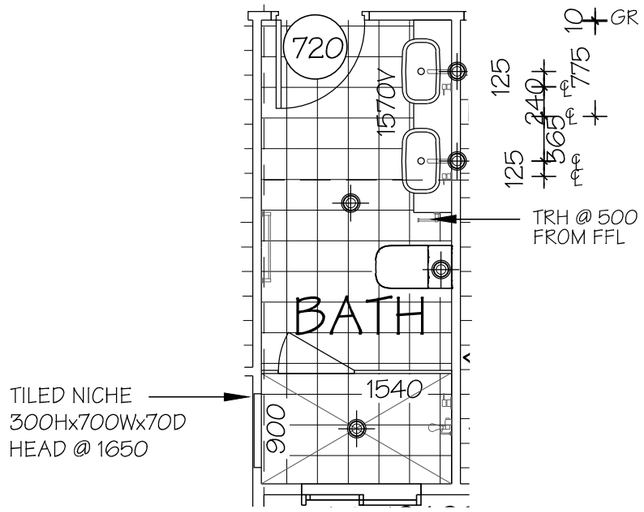

BATHROOM PLAN

NOTES:
- 650mm HIGH TILING OVER LAUNDRY BENCH
- WASHING MACHINE TAPS ABOVE W/M

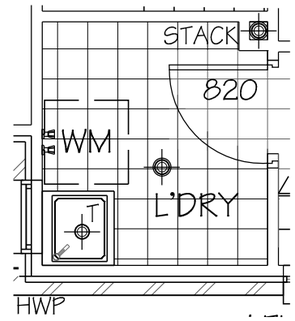

LAUNDRY PLAN

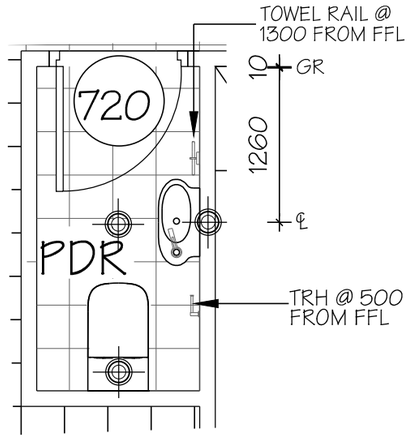

POWDER PLAN

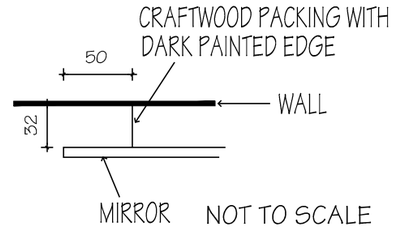

NOT TO SCALE

MIRROR EDGE DETAIL

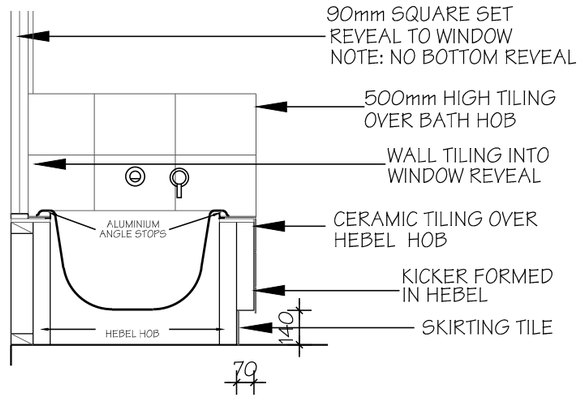

SECTION THROUGH BATH NTS

NOTES:
- PROVIDE CAROMA CAMEO TOILET SUITES WITH SOFT CLOSE SEATS
- PROVIDE 500MM HIGH WALL TILING OVER BATH
- PROVIDE 2100MM HIGH WALL TILING TO SHOWER RECESS
- HEIGHT OF SHOWER SCREENS 2100mm
- SKIRTING TILE TO REMAINDER OF POWDER, BATHROOM, BED 5 ENSUITE BED 1 ENSUITE & LAUNDRY
- RECESSED TILED KICKER TO BATH HOB 140mm HIGH, 70mm WIDE
- WALL MOUNTED SPOUT TO BATH & VANITY
- SQ. EDGE POLISHED FLOATING MIRRORS MOUNTED ON 32mm BOARD, 130mm OFFSET FROM EDGE OF VANITY & HEAD HEIGHT @ 2020mm FROM FFL. SPLASHBACK BETWEEN VANITY & MIRROR

NOTES:

PLEASE NOTE: DETAILS SHOWN ON THESE PLANS ARE INTENDED TO BE ACCURATE - HOWEVER INFORMATION WRITTEN INTO INDIVIDUAL CONTRACTS WILL TAKE PRECEDENCE OVER PLANS

* ALL DIMENSIONS ARE IN MILLIMETRES
* DO NOT SCALE - USE WRITTEN DIMENSIONS
* ALL DIMENSIONS ARE TO STRUCTURAL FRAMES ONLY EXCLUDING FINISHED SURFACES

RAWSON HOMES
1 HOMEBUSH BAY DRIVE
BUILDING F, LEVEL 2, SUITE 1
RHODES NSW 2138
TELEPHONE: 02 8765 5500
FAX : 02 8765 8099
BUILDER'S LICENCE No. 33493C

CLIENT: MR WANG	HOUSETYPE: MODEL: CUSTOM; FACADE: CLASSIC; TYPE: DOUBLE GARAGE; SPECIFICATION: LUX	DRAWN BY: ST	DATE DRAWN: 13.11.14	CHECKED BY: HD/GL	APPROVED FOR CONSTRUCTION:
SITE ADDRESS: LOT 59, DP 1138939 SEAMIST AVENUE ERMINGTON		COUNCIL AREA: PARRAMATTA		SCALE: 1:50	
	DRAWING TITLE: WET AREA DETAILS	JOB No: J004351		DRWG No.: 09	ISSUE: C

LOCATION PLAN

UBD REF: 212, H6

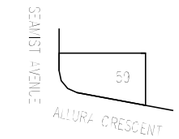

SITE SCRAPE

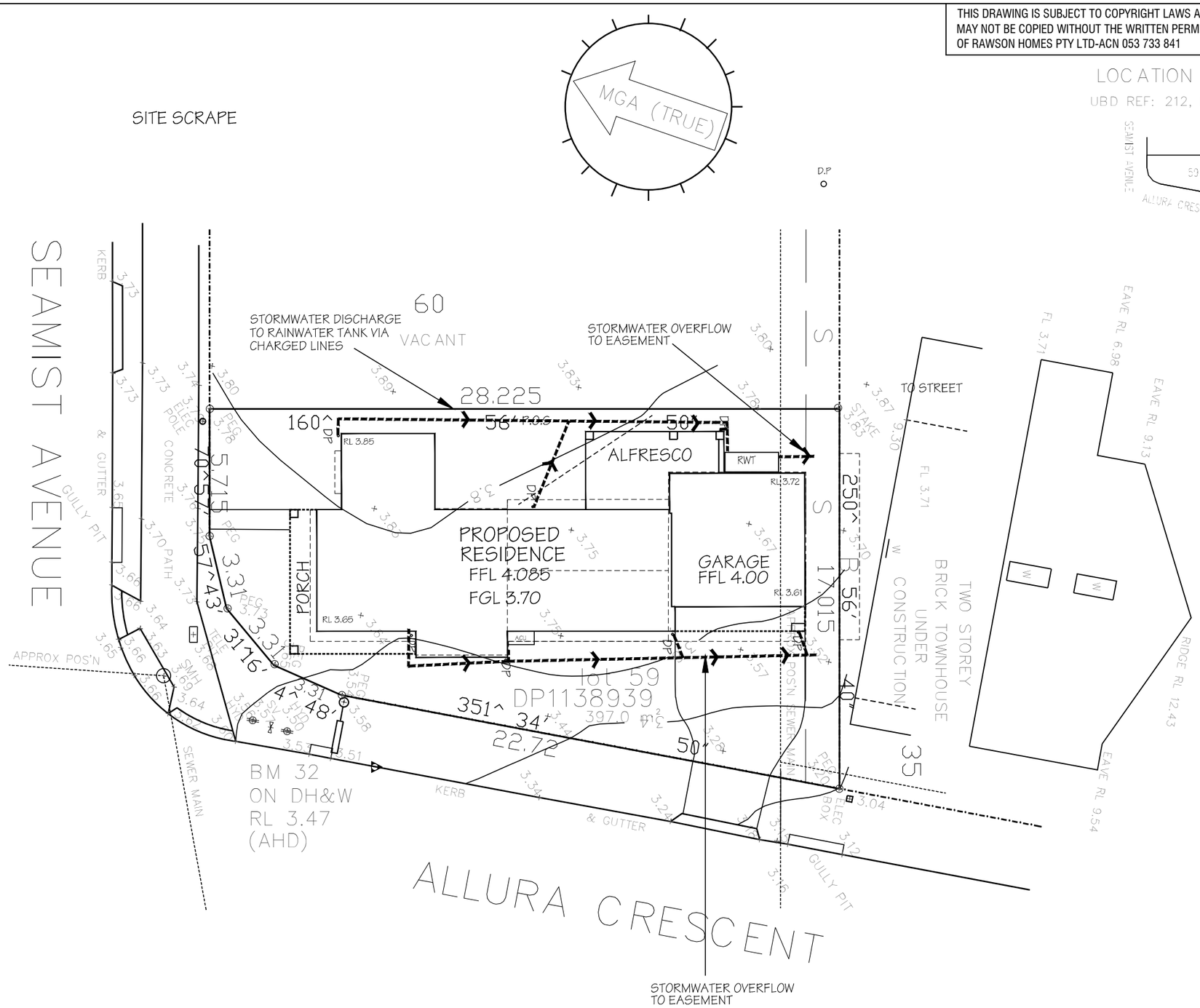

DIAL BEFORE YOU DIG
www.1100.com.au

NOTES:

PLEASE NOTE: DETAILS SHOWN ON THESE PLANS ARE INTENDED TO BE ACCURATE - HOWEVER INFORMATION WRITTEN INTO INDIVIDUAL CONTRACTS WILL TAKE PRECEDENCE OVER PLANS

* ALL DIMENSIONS ARE IN MILLIMETRES
* DO NOT SCALE - USE WRITTEN DIMENSIONS
* ALL DIMENSIONS ARE TO STRUCTURAL FRAMES ONLY EXCLUDING FINISHED SURFACES

RAWSON HOMES
1 HOMEBUSH BAY DRIVE
BUILDING F, LEVEL 2, SUITE 1
RHODES NSW 2138
TELEPHONE: 02 8765 5500
FAX : 02 8765 8099
BUILDER'S LICENCE No. 33493C

CLIENT: MR WANG	HOUSETYPE: MODEL: CUSTOM; FACADE: CLASSIC; TYPE: DOUBLE GARAGE; SPECIFICATION: LUX	DRAWN BY: ST	DATE DRAWN: 13.11.14	CHECKED BY: HD/GL	APPROVED FOR CONSTRUCTION:
SITE ADDRESS: LOT 59, DP 1138939 SEAMIST AVENUE ERMINGTON		COUNCIL AREA: PARRAMATTA		SCALE: 1:200	
	DRAWING TITLE: STORMWATER PLAN	JOB No: J004351		DRWG No.: 11	ISSUE: C

LOCATION PLAN

UBD REF: 212, H6

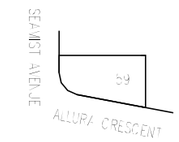

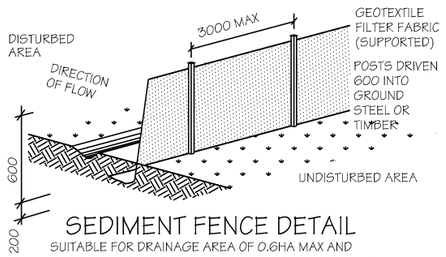

SEDIMENT FENCE DETAIL

SUITABLE FOR DRAINAGE AREA OF 0.6HA MAX AND SLOPE GRADIENT OF 1:2 MAX WITH LENGTH OF 60M MAX

SEDIMENT CONTROL

INSTALL SEDIMENT CONTROL STRUCTURES IN LOCATIONS INDICATED ON THIS DRAWING AND AS OTHERWISE REQUIRED TO CONTROL SEDIMENT DURING ALL EXCAVATIONS AND WHILST AREAS OF THE SITE ARE EXPOSED TO EROSION. REVIEW CONTROL MEASURES AND MAINTAIN STRUCTURES DURING CONSTRUCTION.

IF ADDITIONAL MEASURES ARE REQUIRED FOR EROSION AND CONTROL OR BY COUNCIL REQUIREMENTS, REFER TO "URBAN EROSION AND SEDIMENT CONTROL" GUIDELINES PREPARED BY THE DEPARTMENT OF CONSERVATION AND LAND MANGEMENT.

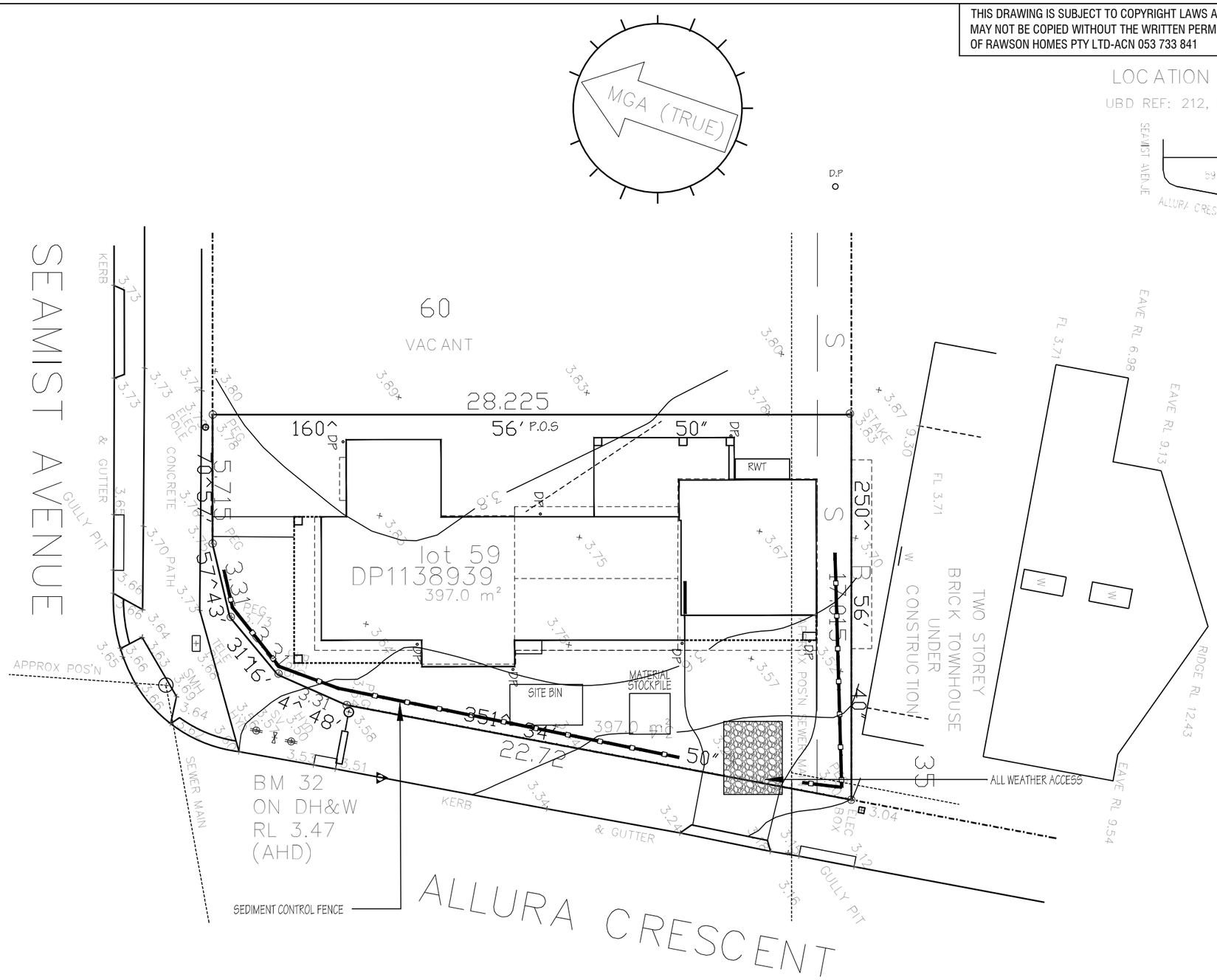

DIAL BEFORE YOU DIG
www.1100.com.au

NOTES:

PLEASE NOTE: DETAILS SHOWN ON THESE PLANS ARE INTENDED TO BE ACCURATE - HOWEVER INFORMATION WRITTEN INTO INDIVIDUAL CONTRACTS WILL TAKE PRECEDENCE OVER PLANS

* ALL DIMENSIONS ARE IN MILLIMETRES
* DO NOT SCALE - USE WRITTEN DIMENSIONS
* ALL DIMENSIONS ARE TO STRUCTURAL FRAMES ONLY EXCLUDING FINISHED SURFACES

RAWSON HOMES
1 HOMEBUSH BAY DRIVE
BUILDING F, LEVEL 2, SUITE 1
RHODES NSW 2138
TELEPHONE: 02 8765 5500
FAX : 02 8765 8099
BUILDER'S LICENCE No. 33493C

CLIENT: MR WANG	HOUSETYPE: MODEL: CUSTOM; FACADE: CLASSIC; TYPE: DOUBLE GARAGE; SPECIFICATION: LUX	DRAWN BY: ST	DATE DRAWN: 13.11.14	CHECKED BY: HD/GL	APPROVED FOR CONSTRUCTION:
SITE ADDRESS: LOT 59, DP 1138939 SEAMIST AVENUE ERMINGTON		COUNCIL AREA: PARRAMATTA		SCALE: 1:200	
	DRAWING TITLE: SEDIMENT CONTROL PLAN	JOB No: J004351		DRWG No.: 12	ISSUE: C

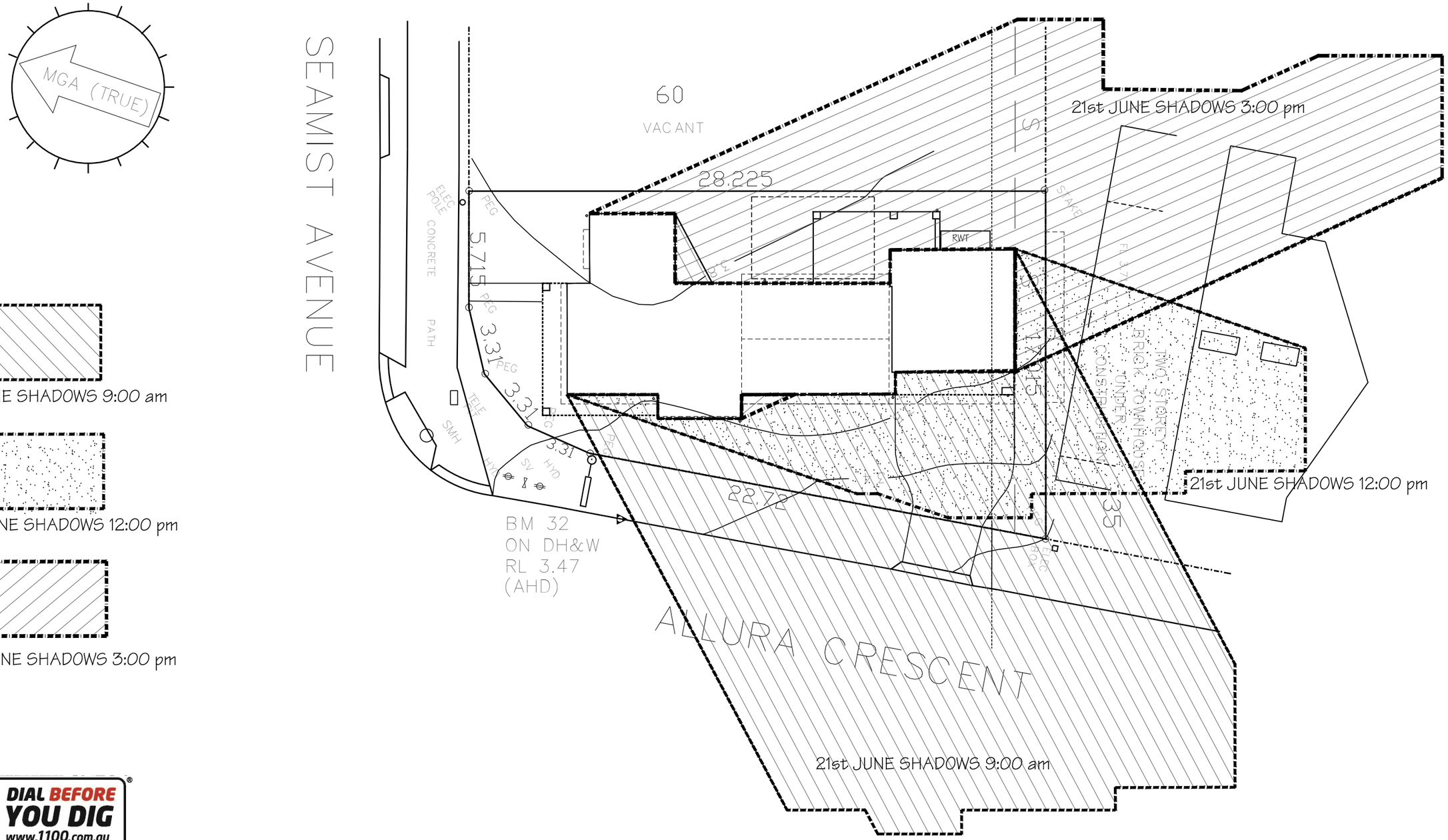

DIAL BEFORE YOU DIG
www.1100.com.au

NOTES:

PLEASE NOTE: DETAILS SHOWN ON THESE PLANS ARE INTENDED TO BE ACCURATE - HOWEVER INFORMATION WRITTEN INTO INDIVIDUAL CONTRACTS WILL TAKE PRECEDENCE OVER PLANS

* ALL DIMENSIONS ARE IN MILLIMETRES
* DO NOT SCALE - USE WRITTEN DIMENSIONS
* ALL DIMENSIONS ARE TO STRUCTURAL FRAMES ONLY EXCLUDING FINISHED SURFACES

RAWSON HOMES
1 HOMEBUSH BAY DRIVE
BUILDING F, LEVEL 2, SUITE 1
RHODES NSW 2138
TELEPHONE: 02 8765 5500
FAX : 02 8765 8099
BUILDER'S LICENCE No. 33493C

CLIENT: MR WANG

SITE ADDRESS:
LOT 59, DP 1138939
SEAMIST AVENUE
ERMINGTON

HOUSETYPE:
MODEL: CUSTOM
FACADE: CLASSIC
TYPE: DOUBLE GARAGE
SPECIFICATION: LUX

DRAWING TITLE: SHADOW DIAGRAM

DRAWN BY:	DATE DRAWN:	CHECKED BY:	APPROVED FOR CONSTRUCTION:
ST	13.11.14	HD/GL	

COUNCIL AREA:	SCALE:
PARRAMATTA	1:200

JOB No:	DRWG No.:	ISSUE:
J004351	13	C

LOCATION PLAN

UBD REF: 212, H6

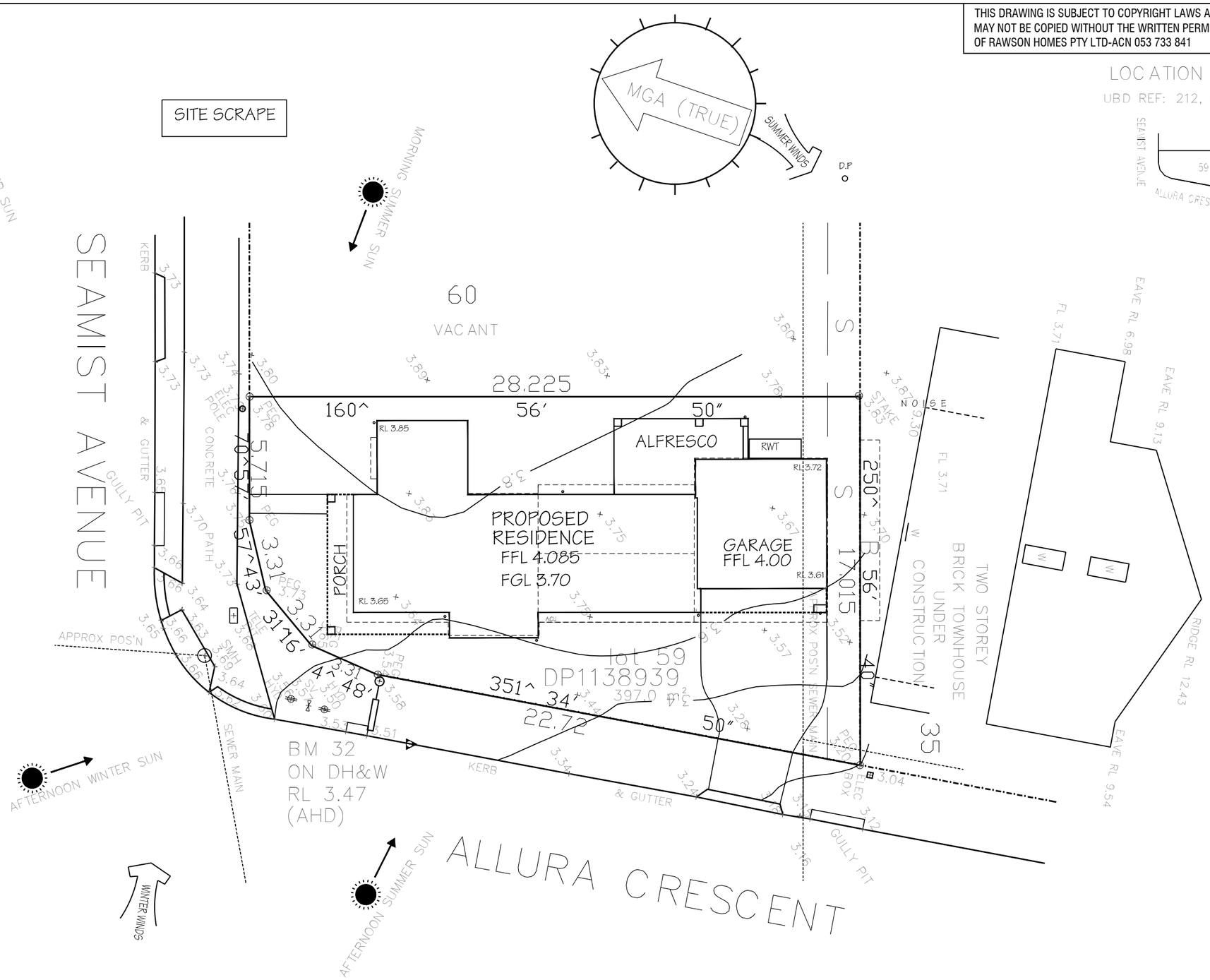

DIAL BEFORE YOU DIG
www.1100.com.au

NOTES:

PLEASE NOTE: DETAILS SHOWN ON THESE PLANS ARE INTENDED TO BE ACCURATE - HOWEVER INFORMATION WRITTEN INTO INDIVIDUAL CONTRACTS WILL TAKE PRECEDENCE OVER PLANS

* ALL DIMENSIONS ARE IN MILLIMETRES
* DO NOT SCALE - USE WRITTEN DIMENSIONS
* ALL DIMENSIONS ARE TO STRUCTURAL FRAMES ONLY EXCLUDING FINISHED SURFACES

RAWSON HOMES
1 HOMEBUSH BAY DRIVE
BUILDING F, LEVEL 2, SUITE 1
RHODES NSW 2138
TELEPHONE: 02 8765 5500
FAX : 02 8765 8099
BUILDER'S LICENCE No. 33493C

CLIENT: MR WANG	HOUSETYPE: MODEL: CUSTOM; FACADE: CLASSIC; TYPE: DOUBLE GARAGE; SPECIFICATION: LUX	DRAWN BY: ST	DATE DRAWN: 13.11.14	CHECKED BY: HD/GL	APPROVED FOR CONSTRUCTION:
SITE ADDRESS: LOT 59, DP 1138939 SEAMIST AVENUE ERMINGTON		COUNCIL AREA: PARRAMATTA		SCALE: 1:200	
	DRAWING TITLE: SITE ANALYSIS PLAN	JOB No: J004351		DRWG No.: 14	ISSUE: C