Appendix 19

Revised Soil and Water Management Plan

vgt
Environmental
Compliance
Solutions

PO Box 2335 Greenhills NSW 2323
P (02) 4028 6412 F (02) 4028 6413 E mail@vgt.com.au
www.vgt.com.au ABN 79 103 636 353

Hodgson Quarry Products Pty Ltd

Soil and Water Management Plan
Maroota Quarry
Via Maroota

Prepared by:

VGT Pty Ltd

for:

Hodgson Quarry ProductsPty Ltd

Hodgson Quarry Products Pty Ltd

Soil and Water Management Plan
Maroota Quarry
Via Maroota

Prepared by:	
VGT Pty Ltd	ph: (02) 4028 6412
4/30 Glenwood Drive,	fax: (02) 4028 6413
Thornton NSW 2322	email: mail@vgt.com.au
PO Box 2335	www.vgt.com.au
Greenhills NSW 2323	ABN: 79 103 636 353

Report Date:	15/07/2015	
Report Number:	1557_HMA_SWMP_R4	
Copy Number:		
Report Authorised by:	Martin Hodgson	Date: 15/07/2015
	Tara O'Brien	Date: 15/07/2015

This Copyright is included for the protection of this document

COPYRIGHT
© VGT Pty Ltd
and
©Hodgson Quarry Products Pty Ltd

All intellectual property and copyright reserved.

Apart from any fair dealing for the purpose of the private study, research, criticism or review, as permitted under the Copyright Act 1968, no part of this report may be reproduced, transmitted, stored in a retrieval system or adapted in any form or by any means (electronic, mechanical, photocopying, recording or otherwise) without written permission. Enquiries should be addressed to VGT Pty Ltd.

Disclaimer

This report was prepared in accordance with the scope of services set out in the contract between VGT Pty Ltd ABN 79 103 636 353 and the Client and is not to be reproduced except in full. To the best of our knowledge, the report presented herein accurately reflects the Client's intentions when the document was printed. However, the application of conditions of approval or impacts of unanticipated future events could modify the outcomes described in this document. In preparing the report, VGT used data, surveys, analyses, designs, plans and other information provided by individuals and organisations referenced herein. While checks were undertaken to ensure that such materials were the correct and current versions of the materials provided, except as otherwise stated, VGT did not independently verify the accuracy or completeness of these information sources.

Table of Contents

		Page No.
Section 1.	**Executive Summary**	**6**
Section 2.	**Introduction**	**7**
2.1.	Glossary	7
2.2.	Introduction	10
2.3.	Regulatory Requirements	10
2.4.	Objectives	14
Section 3.	**Existing Site**	**15**
3.1.	Geology	15
3.2.	Topography	15
3.3.	Site Features	15
3.4.	Existing Water Management	17
3.5.	Soil Types	22
Section 4.	**Site Works**	**23**
4.1.	Extraction Techniques	23
Section 5.	**Proposed Water Management**	**24**
5.1.	Clean Water Management	24
5.2.	Dirty Water Management	24
5.3.	Final Landform	31
5.4.	Transfer of Water Offsite	32
5.5.	Contaminated Water	35
5.6.	Recycling of Water	36
5.7.	Diversion Drains	36
5.8.	Decommissioning of Water Management Structures	36
Section 6.	**Soil Management**	**37**
6.1.	General Instructions	37
6.2.	Works Sequence	37
6.3.	Erosion Control	37
Section 7.	**Monitoring and Maintenance**	**40**
7.1.	Reporting	40
7.2.	Emergency Response	40
7.3.	Responsibility	41
Section 8.	**References**	**42**

Figures

Figure One.	Site Locality
Figure Two.	Groundwater Monitoring Sites
Figure Three.	Existing Catchments
Figure Four.	Water Management Phase One
Figure Five.	Water Management Phase Two
Figure Six.	Water Management Phase Three
Figure Seven.	Water Management Phase Four
Figure Eight.	Water Management Phase Five
Figure Nine.	Water Management Phase Six
Figure Ten.	Water Management Final Landform

Appendices

Appendix A	Figures
Appendix B	Consent Conditions
Appendix C	EPA Licence
Appendix D	Blue Book Calculations
Appendix E	Blue Book Standard Drawings

Section 1. Executive Summary

This document has been prepared to discuss the proposed Soil and Water Management system within the Maroota Quarry, located at Maroota.

The water management of the site has been developed to comply with Managing Urban Stormwater, Soils and Construction, Volume 2E Mines and Quarries. Sediment basins are designed for a 95th percentile, 5 day rainfall event whilst catch drains and diversions are designed for a 10 year Average Recurrence Interval.

Clean water is currently diverted around the disturbed area via diversion bunds where possible and the natural topography assists. A portion of clean water from the undisturbed areas and properties adjacent to the quarry on Roberts Road does enter the main quarry area. Dirty water is collected in the disturbed areas into one of several dams to allow for settling to occur.

Retained water is reused on site for dust suppression and material processing. For this reason water is generally retained as far as possible on site. No water is released off-site.

If required Dams will only be discharged when quality limits are met.

The proponent will undertake a regular monitoring and maintenance program to ensure water management goals are met.

Section 2. Introduction

2.1. Glossary

Term	Meaning
Acid Sulphate Soils (ASS)	Naturally acid clays, mud and other sediments usually found in swamps and estuaries. They may become extremely acidic when drained and exposed to oxygen, and may produce acidic leachate and run-off which can pollute receiving waters and liberate toxins. ASS are classified as materials which are above the groundwater, are undergoing oxidation and have a pH of less than 4.0.
Alluvial Soil	Juvenile soils formed by deposition from still or moving water. Little pedological development beyond some accumulation of organic matter at the surface.
Arboreal	To live in, or be connected with, trees.
AHD – Australian Height Datum	A height of zero was assigned to the mean sea level determination at 30 tide gauges around the Australian Mainland coastline, measured over a three year period from 1966 to 1968. (G.C. Luton and G.M Johnson 2001)
Amenity	The degree of pleasantness of an area or place.
ANZECC	Australian and New Zealand Environment and Conservation Council
Artefact	An object, normally portable, made or modified by human hands.
Aquifer	A soil or rock layer or group of layers that is sufficiently saturated and permeable to yield significant quantities of water.
Average recurrence interval (ARI)	Average or expected period between exceedance of a flood.
Bed Rock	The unweathered rock that lies below loose surface deposits of soil and alluvium.
Biological Diversity	The variety of all life forms, comprising genetic diversity (within species), species diversity and ecosystem diversity.
Cumulative Impact	The sum effect on the environment resulting from the successive effects of several different impacts.
Catchment	A valley defined naturally by the watershed line along the tops of the ridges that separate it from a neighbouring catchment. The area within this watershed line is the catchment area from which rainfall flows into a river or reservoir.
Culvert	One or more adjacent, enclosed channels for conveying a stream below road formation level.
Cumulative impact	The sum effect on the environment resulting from the successive effects of several different impacts.
Earthworks	The process of extracting, moving and depositing earth during construction.
DRE	Department of Trade and Investment- Resources and Energy
Ecologically sustainable development	Using, conserving and enhancing the community's resources so that ecological processes, on which life depends, are maintained, and the total quality of life, now and in the future, can be increased.
Ecosystem	A functional unit of energy transfer and nutrient cycling in a given place such as a forest or estuary; it includes all the relationships within the biotic community and between the biotic components of the system.
Embankment	A mound or bank of earth or stone formed to support a roadway, serve as a protective barrier, or the like.
Endangered Ecological Community (EEC)	An ecological community specified in Part 3 of the *NSW Threatened Species Conservation Act 1995*. An ecological community is listed as endangered if, in the opinion of the Scientific Committee: it is likely to become extinct in

Term	Meaning
	nature in NSW unless the circumstances and factor threatening its survival cease top operate, or it might already be extinct.
EPA	Environmental Protection Authority
Erosion	The natural process where wind or water detaches a soil particle and provides energy to move the particle.
Excavation	The act or process of digging out earth during construction.
Fauna	The animal population
Flora	Plants that make up the vegetation of the site
Floodplain	Large flat area of alluvium adjacent to a watercourse, characterised by frequent active erosion and aggregation by channelled and overbank stream flow.
Greenhouse Effect/ Global Warming	The heating of the atmosphere by the absorption of infrared energy remitted by the Earth as it receives energy from the Sun.
Groundwater	All waters occurring below the land surface. The upper surface of the soils saturated by groundwater in any particular area is called the water table.
Habitat	The place where an organism lives; habitats are measurable and can be described by their flora and physical components.
Hydrology	The study of rainfall and surface water runoff processes.
Introduced species	Plants and animals not native to Australia and known or thought to have been brought in by humans.
Inversion	Is a deviation from the normal change of an atmospheric property with altitude. It almost always refers to a temperature inversion, i.e., an increase in temperature with height, or to the layer (inversion layer) within which such an increase occurs.
LEP	Local Environmental Plan (prepared under the *Environmental Planning and Assessment Act 1979*)
Licence (EPA)	A Pollution Control Licence is issued pursuant to section 17D of the Pollution Control Act 1970 on premises scheduled or prescribed by the legislation. Licensing remains the main instrument for implementing point source pollution control, reduction and remediation programs. A licence is renewable annually and is subject to a fee calculated on the basis of the nature and size of the operation
Local road	A road or street used primarily for access to abutting properties
OEH	Office of Environment and Heritage
pH	A measure of the degree of acidity or alkalinity expressed on a logarithmic scale of 1-14, on which 1 is most acid, 7 is neutral and 14 is most basic.
Pollution Reduction Program – PRP	PRP's can be required as a condition of the EPA licence or, possibly, as a condition of other works approval. Plans can define the capital works to be installed, new pollution control equipment, process changes, site rehabilitation or other measures to be introduced within the period of the plan to correct nominated environmental problems.
REP	Regional Environmental Plan (prepared under the *Environmental Planning and Assessment Act 1979*)
Rainfall Erosivity	Ability of rainfall to cause erosion.
Rehabilitation	The restoration of a landscape and especially the vegetation following its disturbance.
Remnant vegetation	Native vegetation remaining after widespread clearing has taken place.
Revised Universal Soil Loss Equation (RUSLE)	Is designed to predict the long term, average, annual soil loss from sheet and rill flow at nominated sites under specified management conditions.
Runoff Coefficient	The coefficient of runoff is the ratio of how much water is likely to runoff a site against how much rain falls in any particular storm event.

Term	Meaning
Sediment	Material of varying sizes that has been or is being moved from its site of origin by the action of wind, water or gravity.
Sedimentation basin	An area where run-off is ponded to allow sediment to be deposited. The longer the period that run-off is held, the smaller the size of the sediment deposited. Such basins have to be cleaned regularly.
Slope length/gradient Factor	The slope length–gradient factor, LS, describes the combined effect of slope length and slope gradient on soil loss. It is the ratio of soil loss per unit area at any particular site to the corresponding loss from a specific experimental plot of known length and gradient.
Soil	That part of the upper weathered layer of the earth's crust that can support plant growth. Any naturally occurring loose or soft deposit forming part of the earth's crust and resulting from weathering or breakdown of rock formation or from the decay of vegetation.
Soil Erodibility (K)	Soil erodibility factor (K-factor) – In the Revised Universal Soil Loss Equation, the soil erodibility factor, K, is a measure of the susceptibility of soil particles to detachment and transport by rainfall and runoff.
Soil Hydrological Group	Four Soil Hydrologic Groups (USDA, 1993) are derived from a consideration of their infiltration and permeability characteristics. The four Groups are: Group A – very low runoff potential, Group B – low to moderate runoff potential, Group C – moderate to high runoff potential and Group D – very high runoff potential.
Soil Texture Group	An important attribute of soils that affects the effectiveness of sediment retention structures is the proportion of particles finer than 0.02 mm. Particles that are finer than 0.02 mm are relatively difficult to trap in simple sediment retention basins, while those that are coarser are not.
Stone Artefact	Fragment of a stone (used by Aborigines) which generally possesses one or more of the following characteristics: positive or negative ring crack, distinct positive or negative bulb of force, definite eraillure scar in a position beneath a platform or definite remnants of flake scars
Stormwater	Rainwater which runs off urban and agricultural catchments, following rain events. This untreated water is carried in stormwater channels and discharges into creeks, rivers, lakes, harbours and oceans.
Study Area	The area to which technical investigations or assessments have been undertaken. Includes areas adjoining or proximal to the site.
Swale	A natural depression or wide shallow ditch used to temporarily convey, store, or filter runoff.
T – Tonnes	Weight measurement being 1000 kilograms.
Waste	Includes any matter (whether liquid, solid, gaseous or radioactive) that is discharged, emitted or deposited in the environment in such volume, constituency, or manner as to cause an alteration to the environment.
Water body	The collective name for all forms of static and active water features (rivers, creeks, streams, lakes and estuaries).
Wetland	Land either permanently or temporarily covered by water. These areas are usually characterised by vegetation or a moist soil or aquatic type.
Water pollution	Placing in or on, or otherwise introducing into or onto, waters (whether through an act or omission) any matter, whether solid, liquid or gaseous, so that the physical, chemical or biological condition of the waters is changed. (POEO Act 1997)
1 in 100 year flood level	Refers to the flood which occurs, on average, once every 100 years. Also known as the 100 year Average Recurrence Interval of a flood. These events are of a random nature. It is possible for there to be two 100 year floods in successive years; similarly to 100 year flood may not occur for 200 years and the 100 year flood may not be the largest flood in the last 100 years.

2.2. Introduction

HB Maroota Quarry is located on Roberts Road near Old Northern Road, Maroota. Maroota is approximately 50 kilometres north west of Sydney see *Figure One*. The site was formerly known as Sun-A-Rise Quarry, where construction of a water supply dam commenced around 1970. Consent was granted for extraction and processing of sand, clay and pebble material in 2000. HB Maroota Pty Ltd took over operations on the site in 2004.

A Soil and Water Management Plan (SWMP) was developed by Morse McVey and Associates Pty Ltd for the site in 1999 and was submitted with the EIS in the same year.

A new Environmental Assessment (EA) was submitted in May 2015 to extend the life of the quarry to the Department of Planning and Environment. Thus this report seeks to update the original SWMP.

2.3. Regulatory Requirements

2.3.1. Planning and Environment- Planning Services

Development approval, with conditions of consent was issued by the then Department of Urban Affairs and Planning (S98/00772) on the 31st of May 2000 (see *Appendix B).* This consent expires on the 31st of May 2015.

Modification to S98/00772 was issued on the 29th of November 2000 (also see *Appendix B).*

As stated above a Modification to Consent was submitted to the Department in May 2015 and is currently under consideration.

Conditions in the consent that relate to soil and water management are reproduced below.

DEPTH OF EXTRACTION

Baulkham Hills Shire Council Development Control Plan for Extractive Industries (DCP 500) requires that the depth of extraction incorporate a 2m freeboard above the wet weather high groundwater level. To meet the objectives of this policy, the Applicant shall ensure that the depth of extraction is consistent with the depth as shown in the extraction plan in the EIS and follow the procedures in Condition 40 if groundwater is encountered during extraction.

WATER QUALITY

Soil and Water Management Plan

38. The Applicant shall prepare and implement a Soil and Water Management Plan as part of the EMP. This plan shall be updated on an annual basis, to the satisfaction of DLWC and in consultation with DLWC. This Plan shall have particular regard to the most recent editions of the Department of Housing's publications Managing Urban Stormwater Soils and Construction (1990), and the requirements of Council's Development Control Plan 500 Extractive Industries.

The Soil and Water Management Plan shall contain, but not be limited to:

> *c) management of the impacts of all phases of the development on the quality and quantity of surface and groundwater, including water in storage, sedimentation dams and flooding impacts;*

d) details of measures to be employed to minimise soil erosion and the discharge of sediment to land and/or waters;

e) management of the impacts of the development on nearby creeks and waterbodies, in particular, the Hawkesbury River;

f) a strategy for the decommissioning of water management structures, including storage, sedimentation and leachate dams once extraction is complete;

g) identification of all potential sources of water pollution and a detailed description of the remedial action to be taken or management systems to be implemented to minimise emissions of those pollutants from all sources within the subject site;

h) description of monitoring methodologies and standards that will be adhered to;

i) identification of the locations where monitoring will be carried out;

j) detailed description of the monitoring cycle and the duration of each monitoring cycle;

k) details of actions to ameliorate impacts if they exceed the relevant criteria;

l) detail any exceedances and the mitigative actions used; and

m) *emergency contingency plans for implementation in the event that the* groundwater is encountered during excavation (see Condition 40).

Water Monitoring

39. Groundwater monitoring shall be undertaken on a regularly scheduled basis to provide data suitable for the determination of the wet weather high groundwater level, to the satisfaction of DLWC. A network of monitoring bores shall be installed at appropriate locations across the site to accommodate these objectives.[5]

Groundwater Management

40. The Applicant shall immediately notify DLWC in the event of groundwater being encountered during excavation. The location and elevation of such intersections is to be reported to allow determination by DLWC whether the water table occurs within a perched aquifer or if it is at a regional level, In the event of breaching of the groundwater table, operations are to cease and DLWC consulted immediately to determine the basis upon which extraction may recommence.6 If no response is received from DLWC within 24 hours, the Applicant shall implement the emergency contingency plans as described in the Soil and Water Management Plan (Condition 38). The Applicant shall advise the Director-General of the results of any such incidents under this Condition.

41. Site works and excavations are to be backfilled or infilled only with earth and rock materials sourced as a result of extraction operations in the Maroota area. This condition does not apply to the construction of the perimeter bund wall.

Licensable Groundwater Works

All groundwater investigation/monitoring and groundwater supply works are required to be licensed with the DLWC under the provisions of the Water Act 1912 A licence under Part 5 of the Wafer Act 1912 is required to authorise a water supply bore (10BL157594) for industrial (Sand Washing) purposes and stock.

Surface Water Management

The applicant shall not allow any tailwater drainage to discharge into or onto:

- *any adjoining public or Crown road;*
- *any other persons land;*
- *any Crown land;*

- *any river, creek or watercourse;*
- *any groundwater aquifer;*
- *any native vegetation as described under the Native Vegetation Conservation Act 1997;*
- *any wetlands of environmental significance6*

44, Surface stormwater runoff from the disturbed areas on the site must be directed to the sedimentation dam(s).

Dam Licencing

45. A license will be required for any new dams under Part 2 of the Water Act 1912. The Applicant shall submit design plans/ survey of the structures as required by DLWC.

2.3.2. EPA Licence

Environmental Protection Licence 6535 (see *Appendix C)* has been issued under the *Protection of the Environmental Operations Act, 1997* for Crushing, Grinding or Separating Works and Dredging Works. It is renewed annually on the 12th of March.

There are no specific monitoring requirements in the licence.

2.3.3. National Office of Water (NOW)

The site holds a number of licences issued under the *Water Management Act 2000*, for the operation of groundwater bores as well as dams. Location of these bores and dams can be found in *Figure Two.*

Table 1. Water Licences

Water Access Licence (WAL)	Water Approval No'	Licence	Bore No	Purpose	Allocation	Expiry	Bore Status	Comments
24157	10CA114819	10BL157595	PT84PB2	Industrial- sand and gravel/irrigation	6.0ML per year	14/06/2015	Not in Use	Located in the washing plant area.
24163	-	10BL159748	PT84PB1	Industrial- sand and gravel	45.0 ML per year	14/06/2015	Bore Destroyed	Located near 'top dam'.
-	-	-	PT84MW1	Monitoring	-	-	In use for water sampling	Located near nursery.
-	-	10BL158808	PT84MW2	Monitoring	-	perpetuity	Bore Destroyed	Not converted to WAL
-	-	-	PT84MW3	Monitoring	-		Bore Destroyed	
-	-	-	PT84MW4	Monitoring	-		Bore Destroyed	
-	-	10BL158808 pending	PT84MW5	Monitoring	-		New bore	Installed March 2013. Bore replaced PT84MW2 and application for licence under 10BL158808 pending.
26163		10SL045324	Nursery Dam	Irrigation	264ML per year	17/02/2016	-	

2.4. Objectives

The principle objectives of the SWMP are set out below.

- To ensure the segregation of ‘dirty’ water from ‘clean’ water and maximise the retention of time of ‘dirty’ water such that any discharge from the project site meets the relevant water-quality limits, including limits contained in the relevant guidelines and any limits imposed by specific project approvals. ‘Dirty’ water is defined as surface runoff from disturbed catchments. ‘Clean’ water is defined as surface runoff from catchments that are undisturbed or rehabilitated catchments.
- To minimise the volume of water discharged from the project site but, should the discharge of water prove necessary, ensure sufficient settlement time is provided prior to discharge or employ other means such as flocculants to ensure the water meets the objectives identified in the point above.
- To ensure water used in the processing of materials (sand) is contained within the closed system on the site.
- To monitor the effectiveness of surface water and sediment controls and to ensure all relevant surface water quality criteria are met.

Section 3. Existing Site

3.1. Geology

From the EIS (1999):

'The Maroota area is known for the production of sand, which represents a valuable resource to the building industry. The sand is obtained from two main sources, the Maroota Sand and the weathered profiles of the Hawkesbury Sandstone. ….

…..The Maroota Sand comprises a sequence of interbedded and poorly sorted sands, gravels, clayey gravels, gravelly sands, clayey/silty sands and clay which range from compacted to partly consolidate materials. The bulk of these sediments, however, consists of sand sized material. Ferricrete bands are common and occur at a number of levels within the Maroota Sand……

…..The Hawkesbury Sandstone is a widespread formation occupying a large portion of the Sydney Basin. It comprises a thick sequence of sub-horizontal, massive, cemented quartz sandstone, with well-developed cross-bedding and intercalations of shale and siltstone beds. Grain size is generally in the range of fine to medium sand, but sorting is generally poor with some silt and pebble grains. Shale layers and bands and occasional carbonaceous beds are also common within the Hawkesbury Sandstone. Shale beds have been identified at various locations between the Maroota Sand and the underlying Hawkesbury Sandstone bedrock.

3.2. Topography

The areas landscape is formed on a Hawkesbury Sandstone plateau surrounded by steep valleys and massive cliff faces. The relief ranges from 170m AHD, south of the project area to 240.7m AHD at the Maroota trig Station. Within the site elevations range from 226m at the south-western end along Old Northern Road to 178m AHD at the base of the dam excavation.

The original drainage pattern of the area was in a northerly direction to eventually join a tributary of Coopers Creek approximately 2km to the north, however, runoff along this line is captured by a number of dams, two of which are located inside the property boundaries. Those dams provide a water supply to the existing nursery operations on the site. The rest of the site is internally draining, with all runoff directed towards the central dam construction operation.

3.3. Site Features

A number of site features are discussed below.

- An office building, car shed/workshop and amenities building are located at the entrance of the site. The office consist of a permanent building whilst the sheds are of corrugated iron and colour bond construction.
- Adjacent to the office is the weighbridge.
- A processing plant is located centrally in the quarry is also of colour bond construction. Smaller office buildings and general storage are located in this area.
- Mobile plant is located within the quarry. Internal haul roads link the quarry to the weighbridge and the access road to the quarry.

- The site surface is covered in dams, material stockpiles, grass and vegetation. Roads are constructed of gravel.

3.3.1. Contaminated Sites Register/ Dangerous Goods

A search of the NSW EPA Contaminated Land Register shows that the site has not been notified. The proponent advises that there are no dangerous goods held on site.

3.3.2. Site History Summary and Contaminants of Potential Concern

Based on a review of the available historical information, the site began operations in 1990's when construction of a water supply dam began. Previous land uses were agricultural. The proponents took over operations on the site in 2004 as an established quarry.

Table 2. Site Use Summary and Associate Potential Contaminants

Site Use/ Contaminate Source	Potential Contaminants
Weed and pest spraying	Pesticides (OCP's and OPP's) in surface water
Fuel Storage	Total Petroleum Hydrocarbons (TPH), Benzene, Toluene, Ethyl benzene, Xylene (BTEX), Polycyclic Aromatic Hydrocarbons (PAHs)
Emplacement of mulch for rehabilitation	Alkalinity, ammonia, calcium, chloride, fluoride, iron, magnesium, manganese, nitrate, OCP/OPP, Total phenolics, potassium, sodium, sulphate, total organic carbon and BOD

3.4. Existing Water Management

3.4.1. Drainage Patterns

The quarry forms a bowl like structure capturing surface water and directing it to a number of dams located within the site as shown in *Figure Three*. The portions of the site adjacent to Old Northern Road comprise mainly of clean water catchments whilst the disturbed areas extend from the central area to the north and east. The lowest point of the site is Dam 1 with the highest adjacent to Old Northern Road. Surface water collected over properties to the east of Roberts Road enter the site via a road culvert just north of the site entrance. This catchment comprising of approximately 10 Ha is considered clean, and is diverted into Dam 1.

The original creek line runs north of the property from Dam 1. No discharge to the creek has occurred due the water needs of the processing plant.

3.4.2. Process Water Dam

The extraction of sand on the site relies on an adequate supply of water for washing and screening of material. After processing, residue clay/silt is delivered to designated drying areas and liberated water is drained into a holding dam to settle sediment entrained in the process. Water from the holding dam is then pumped back into the process dam for re-use.

For ease of discussion the dam has been divided into three areas;

- Area 1, current pond;
- Area 2, dam works stage one;
- Area 3, current dried wet fines stockpile area, approximately 43,000 cubic metres, overlying insitu sandstone reserves

3.4.2.1. Background

The creation of a large water storage dam in one campaign is not practical because the amount of material to be removed is approximately 230,000 cubic metres and the sand plant processes approximately 80,000 cubic metre per annum, thus there is four years of supply in the dam area. This large scale mining will sterilise the water supply needed to operate the processing plant.

Hodgson Quarry and Plant has resolved to undertake a staged dam construction to provide the sand plant with access to a continuous supply of water so it can continue to operate.

The construction of the dams in the base of the quarry requires excavation works to RL 178 or a firm base. The firm base is an essential component in the dam construction. Compaction of a clay liner on unconsolidated sands or silts will cause the liner to crack and fail. Backfilling will occur to RL 179.4 and then covering with a 600 millimetre compacted clay liner, to RL 180.0. The clay liner used on site is a blend of the dry reject material from the plant and the reclaimed dried wet reject found in the east portions of the site.

Delays in completing the dam works have been due to a number of reasons which include:

- Wet weather flooding the quarry floor; and
- Frequent rain events making the dried reject material unworkable.

3.4.2.2. Proposed Program

Hodgson Quarry and Plant intend to initially complete a temporary dam wall between Areas 1 and 2. Excavation will continue in Area 2, to RL 178 metres or a firm base. The current level in the northern portion of Area 2 has reached the proposed base RL and excavation is continuing in the southern portion. Once completed the dam will be formalised, backfilled and clay-lined. .

Area 1 will then be pumped into Area 2, allowing Area 1 to be dried and prepared for filling and lining. The important element of this staged process is to allow the sand plant access to a continuous supply of water.

3.4.2.3. Wet Weather Operation

Under normal conditions water is pumped from the process dam to the plant. After processing, residue clay/silt is delivered to designated drying areas and liberated water is drained into a holding dam to settle sediment entrained in the process. Water from the holding dam is then pumped back into the process dam for re-use.

The operation of the plant is not affected by wet weather conditions. Water will still be drawn from the process dam and recycled back to it via the holding dam. The dams have more than sufficient capacity to contain the design storm event and the processing plant is located well above the water levels. Emergency pumping of water off-site would not be necessary to continue the plant operations. However, if required the surplus water would be tested and treated prior to release off-site as described in *Section 5.4*.

Surface water drainage is sufficient for the design storm event and as discussed in *Section 5, Table 8*, it is not possible for the dams to overtop and release uncontrolled discharge from the site for the design storm event. Access to the processing plant is not limited by wet weather.

3.4.3. Water Balance

A water balance has been conducted based on historical daily rainfall, evaporation data, and production usage and runoff capacities from the Blue Book. The plant requires 160L per second to process the sand which equates to approximately 13,800 cubic metres per day. It is essential that there is sufficient capacity in the dams onsite to provide this processing water.

3.4.3.1. Dam Volumes

The volumes of the dams on the site are estimated in the table below.

Table 3. Dam Volumes

Dam Identification/ Catchment	Dam Area (m^2)	Estimated Average Depth (m)	Estimated Volume (m^3)
Dam 1	18,890	2	37,780
Dam 2	4,380	2	8,760
Dam 3	7,494	2	14,988
Dam 4	14,480	2	28,860
Total Volume held			90,388

Note: volumes and areas have been calculated using SURPAC software.

The approximate water storage capacity of the current excavation is approximately 136,000 metres cubed, well above the design event of a 1% AEP storm event (of approximately 11,000 metres cubed) based on the 'Blue Book'.

3.4.3.2. Production Losses

On average 10 cubic metres per day is used for dust suppression.

An average of 400 trucks are loaded per month with material estimated to be at 4% moisture. Assuming each truck is 30 tonnes that equates to 480 cubic metres of water leaving the site each month.

Stockpiled sand and clay material have approximately 5% and 35% moisture content (by mass) respectively. Assuming production rate of 1675 tonnes of material per day of which approximately 70% is sand and 30% is clay material the monthly water losses have been calculated to be approximately 1760 cubic metres and 4520 cubic metres respectively.

3.4.3.3. Rainfall and Evaporation Rates

Rainfall data was gathered from the Glenorie (Old Northern Road) (BOM site 67010). Evaporation rates were obtained from the nearest available comparative site which was the Peats Ridge (Waratah Road) (BOM site 61351). and tabulated to obtain the net rainfall data. A run-off co-efficient of 0.57 (from the *Blue Book*) has also been used to estimate the actual runoff from the mean monthly rainfall. Other assumptions are as follows.

- A nominal total dam surface area of 45,254m^2.
- Vertical perimeter embankment walls.
- A maximum storage depth of 4 m.
- A pan evaporation factor of 0.75 for the water storage (to convert recorded pan evaporation to pond surface evaporation).
- No losses for seepage are taken into account.

3.4.3.4. Water Balance Calculation

Using the above data the water balance has been tabulated below.

Table 4. Water Balance Calculation

Month	Mean Monthly Rainfall for years 1914 to 2015 (mm)	Mean Monthly Rainfall for years 1914 to 2015 reduced for run-off co-efficient (m)	Mean Daily Evaporation for years 1981 to 2012 (mm)	Mean Monthly Evaporation for years 1974 to 2014 (mm)	Mean Monthly Evaporation for years 1974 to 2014 With Pan Evaporation Factor (mm)	Evaporation Loss from the Dams (m^3)	Loss per month due to processing for sand (m^3)	Loss per month due to processing for clay (m^3)	Loss per month due to trucks (m^3)	Loss per month due to dust suppression (m^3)	Nett Water Remaining (m^3)	Cumulative Volume (m^3)
January	99.2	0.0565	4.6	138	103.5	4684	1759	4523	480	300	10,590	10,590
February	112.6	0.0642	3.4	102	76.5	3462	1759	4523	480	300	14,815	25,405
March	104.4	0.0595	2.6	78	58.5	2647	1759	4523	480	300	13,796	39,201
April	85.3	0.0486	1.8	54	40.5	1833	1759	4523	480	300	10,360	49,561
May	78.2	0.0446	1.6	48	36	1629	1759	4523	480	300	9,004	58,565
June	95.3	0.0543	1.7	51	38.25	1731	1759	4523	480	300	12,685	71,250
July	52.0	0.0296	2.4	72	54	2444	1759	4523	480	300	2,339	73,589
August	60.8	0.0347	3.4	102	76.5	3462	1759	4523	480	300	3,310	76,898
September	51.5	0.0294	4.0	120	90	4073	1759	4523	480	300	632	77,530
October	70.8	0.0404	4.3	129	96.75	4378	1759	4523	480	300	4,616	82,147
November	79.8	0.0455	4.7	141	105.75	4786	1759	4523	480	300	6,198	88,345
December	77.1	0.0439	3.2	96	72	3258	1759	4523	480	300	7,101	95,446

As can be seen above under average conditions there is a surplus of water (95,500 cubic metres per year) collected on the site.

3.4.4. Projected Future Water Usage

The water balance is affected primarily by the rainfall and the production losses suffered through the processing of the sand. In order to maintain the currency of the water balance the following items will be recorded and /or reviewed if the production rates or rainfall received alter significantly from the expected rates. The water balance would be recalculated using the most current data.

- Rainfall data is currently collected on the site using the meteorological station and is reported monthly along with other meteorological data. Site data will be used in the water balance calculation if required.
- Spot moisture checks would be conducted on stockpiles to determine losses.
- Volumes of water used through the plant will be estimated and/or recorded if there is a change in process or equipment. Data will be used to recalculate the water balance as required.
- Water levels within the dam will be recorded annually. To assist with this, a marker post will be installed in each dam with current levels shown. Any annual change in the level will be measured and the volume of water gained or lost from the dams will be calculated and recorded in the water balance.

Should any significant changes to the water balance be apparent, the water management system will be reviewed and changed if required.

3.4.5. Surface Water Quality

There are no surface monitoring requirements in the EPA licence or consent conditions and no discharge off-site has occurred recently. As such no surface water quality monitoring has been undertaken.

Should discharge be required sampling would be undertaken and water quality would be compared to the ANZECC (2000) Australian and New Zealand Guidlines for Fresh and Marine Quality triggger values as appropriate.

Samples would be analysed by NATA accrediated laboratories using EPA approved methods and APHA or Australian Standards.

3.5. Soil Types

Important site physical characteristics are identified in the table below.

Table 5. Constraints and Characteristics

Constraint/Opportunity	Value
Rainfall Erosivity	Moderate (R-factor= 2,290)
Rainfall Zone	1
Slope Gradients	Variable (average up to 14%)
Potential Erosion Hazard	Generally high depending on the slopes
Soil Erodiblity	Moderate to high
Calculated Soil Loss	Up to 2,400 tonnes/ha/yr depending on particular quarry slopes.
Soil Loss Class	1 to 7
Soil Texture Group	Type F
Soil Hydrological Group	B
Percent Dispersible (subsoil)	Significant
Runoff Coefficient	0.57 low to moderate (Soil Hydrological Group B)
Disturbed Site Area	28 ha approximately

The Soil Hydrological Group for the soil materials is assumed to be B, low to moderate run-off potential. Water moves into and through these soils at a moderate rate when thoroughly wetted. They shed run-off only infrequently.

Sediment retention basins are designed using the Type F Soils calculations. This includes the sediment storage zone calculation using the estimated soil loss for the site over two months.

The likely soil loss is calculated with the Revised Universal Soil Loss Equation (RUSLE). The values of the other RUSLE factors are: P of 1.3, and the C is assumed to be 1.0 for bare soil.

Section 4. Site Works

4.1. Extraction Techniques

4.1.1. Quarry Staging and Methods

Site works involve the extraction of sand, clay and gravel material from approximately 28 hectares of the site to an average depth of 20-25 metres, depending on the underlying groundwater level. Maximum extraction depth will be approximately 35 metres, towards Old Northern Road. Extraction operations will continue as before with the sand and sandstone materials providing raw material to the processing plant. Staging of the extraction will follow the areas outlined in the accompanying figures.

4.1.2. Materials Processing and Storage

The material is loaded into a belt feeder which introduces the sand into a mixing tank. An electric pump at the water storage dam and pumps water to the mixing tank via a pipeline. The sand slurry is drawn out of the mixing tank by a slurry pump and pumped to the processing plant.

The processing plant washes and screens material, using water primarily from the existing water supply dam adjacent to the northern boundary (Dam 1).

After washing and screening, material is stockpiled adjacent to the plant area prior to transportation off-site by truck. Trucks are loaded using a front-end-loader.

Washing and screening forms a residual clay/silt slurry which is piped to designated drying areas in a previously extracted cell where it will be spread in thin layers to dry. Liberated water will be drained to the water dam for re-use in the processing plant.

Section 5. Proposed Water Management

The current water management strategy is to divert clean water as appropriate but retaining as much surface water as possible to meet the needs of the processing plant.

5.1. Clean Water Management

Clean water is diverted around the site via series of earthen bunds where possible or utilising the natural ridgeline topography and bunds (see *Figure Three*). This system has shown to be satisfactory and no changes are proposed.

5.2. Dirty Water Management

All surface water captured over the disturbed areas of the quarry is considered dirty and is collected in on site dams. No water is discharged off site.

The site is above the 1 in 100 year flood level and quarrying at the site will have no adverse impact on flooding in the area.

In general there will be no major changes to the dirty water management system. The site is divided into 4 major catchments consisting of clean and dirty water catchments as discussed below.

5.2.1. Catchment 1

Catchment 1 is the largest catchment on the site and comprises both clean and dirty water sub-catchments. Dam 1, used as a source of processing water, is located centrally in this catchment at the lowest point. As the quarry progresses the size of the catchments will alter and thus the required capacity of the dam will change in order to meet the design storm event criteria.

The total catchment area is approximately 26 Hectares however it has been divided into two sub-catchments for ease of calculation when designing sediment basins and drains based on slopes and slope lengths.

Catchment 1A comprises Dam 1 in the north east of the site. It is approximately 1.9Ha in area with average slopes of approximately 0-1%. The size of this catchment will not change appreciably over the extraction stages.

Catchment 1B comprises the east and west flanks of Dam 1 and is approximately 5.0Ha in area with slopes averaging 8%. The size of this catchment will not change appreciably over the extraction stages.

Catchment 1C comprises the western portion of Catchment 1 and is approximately 2.1Ha in area with slopes averaging 5%. The size of this catchment will not change appreciably over the extraction stages.

Catchment 1D is considered clean water and comprises the south eastern portion and the eastern boundary of Catchment 1. It is approximately 6.0Ha in area with slopes averaging 9%. By Stage One the catchment will reduce to 2.5 Ha as water is diverted into Catchment 2.

Catchment 1E is also considered clean water and comprises the properties to the east of Roberts Road. It is approximately 11Ha in area with slopes averaging 9%. The size of this catchment will not change over the extraction stages.

The following table summarises the Catchment 1 volumes required by the Blue Book calculations in *Appendix D.*

Table 6. Existing Catchment 1 Volumes

Catchment	Catchment Area (Ha)	Sediment Basin Storage (soil) volume (m^3)	Sediment Basin Storage (water) volume (m^3)	Dam Volume Required for 95th percentile, 5 day rainfall event (m^3)
1A	1.89	4	748	752
1B	5.00	631	1,978	2,609
1C	2.13	123	843	966
1D	5.97	-	2,362	2,362
1E	10.84	-	4,288	4,288
Total	**25.83**	**758**	**10,219**	**10,977**

Note: volumes and areas have been calculated using SURPAC software.

Table 7. Stage One to Six Catchment 1 Volumes

Catchment	Catchment Area (Ha)	Sediment Basin Storage (soil) volume (m^3)	Sediment Basin Storage (water) volume (m^3)	Dam Volume Required for 95th percentile, 5 day rainfall event (m^3)
1A	1.89	4	748	752
1B	5.00	631	1,978	2,609
1C	2.13	123	843	966
1D	2.54	-	1,005	1,005
1E	10.84	-	4,288	4,288
Total	**22.40**	**758**	**8,862**	**9,620**

Note: volumes and areas have been calculated using SURPAC software.

The following table outlines the current estimated volume held in Dam 1. It also shows the potential volume of water that could be held in this catchment before it would overtop at the lowest point of the quarry wall (calculated using survey data).

Table 8. Dam 1 Volume

Dam Identification/ Catchment	Dam Area (m^2)	Estimated Depth (m)	Estimated Volume (m^3)	Potential Volume that could be held (m^3)
Dam 1	18,890	2	37,780	136,000

Note: volumes and areas have been calculated using SURPAC software.

As can be seen from the tables above, the volume of water that could be held by the Dam 1 is more than sufficient to capture the design storm event.

5.2.2. Catchment 2

Catchment 2 is the area of current extraction and surrounding slopes and comprises of dirty water sub-catchments. Dam 2 is located centrally in this catchment at the lowest point. As the quarry progresses the size of the catchments will alter and thus the required capacity of the dam will change in order to meet the design storm event criteria.

The total existing catchment area is approximately 5.3 Hectares however it has been divided into two sub-catchments for ease of calculation when designing sediment basins and drains based on slopes and slope lengths.

Catchment 2A comprises Dam 2 and is approximately 3.4Ha in area with average slopes of approximately 14%. The size of this catchment will not change appreciably over the extraction stages.

Catchment 2B comprises the west flanks of Dam 2 and undisturbed slopes further west. It is approximately 5.0Ha in area with slopes averaging 8%. The size of this catchment will change over the extraction stages to a maximum extent of approximately 16Ha. It has been assumed that the average slope of the staged quarry extensions will be about 14%.

The following table summarises the Catchment 2 volumes required by the Blue Book calculations in *Appendix D.*

Table 9. Existing Catchment 2 Volumes

Catchment	Catchment Area (Ha)	Sediment Basin Storage (soil) volume (m^3)	Sediment Basin Storage (water) volume (m^3)	Dam Volume Required for 95th percentile, 5 day rainfall event (m^3)
2A	3.43	971	1,357	2,328
2B	1.90	235	752	987
Total	**5.33**	**1,206**	**2,109**	**3,315**

Note: volumes and areas have been calculated using SURPAC software.

Table 10. Stage One to Two Catchment 2 Volumes

Catchment	Catchment Area (Ha)	Sediment Basin Storage (soil) volume (m^3)	Sediment Basin Storage (water) volume (m^3)	Dam Volume Required for 95th percentile, 5 day rainfall event (m^3)
2A	9.77	1,390	3,865	5,255
2B	3.59	-	1,420	1,420
Total	**13.36**	**1,390**	**5,285**	**6,675**

Note: volumes and areas have been calculated using SURPAC software.

Table 11. Stage Three Catchment 2 Volumes

Catchment	Catchment Area (Ha)	Sediment Basin Storage (soil) volume (m^3)	Sediment Basin Storage (water) volume (m^3)	Dam Volume Required for 95th percentile, 5 day rainfall event (m^3)
2A	10.52	2,409	4,162	6,571
2B	3.59	-	1,420	1,420
Total	**13.36**	**2,409**	**5,582**	**7,991**

Note: volumes and areas have been calculated using SURPAC software.

Table 12. Stage Four Catchment 2 Volumes

Catchment	Catchment Area (Ha)	Sediment Basin Storage (soil) volume (m^3)	Sediment Basin Storage (water) volume (m^3)	Dam Volume Required for 95th percentile, 5 day rainfall event (m^3)
2A	11.90	4,334	4,707	9,041
2B	2.78	-	1,101	1,101
Total	**14.68**	**4,334**	**5,808**	**10,142**

Note: volumes and areas have been calculated using SURPAC software.

Table 13. Stage Five to Six Catchment 2 Volumes

Catchment	Catchment Area (Ha)	Sediment Basin Storage (soil) volume (m^3)	Sediment Basin Storage (water) volume (m^3)	Dam Volume Required for 95th percentile, 5 day rainfall event (m^3)
2	15.77	6,214	6,238	12,452

Note: volumes and areas have been calculated using SURPAC software.

The following table outlines the current estimated volume held in Dam 2. It also shows the potential volume of water that could be held in this catchment before it would overtop at the lowest point of the quarry wall (calculated using survey data).

Table 14. Dam 2 Volume

Dam Identification/ Catchment	Dam Area (m^2)	Estimated Depth (m)	Estimated Volume (m^3)	Potential Volume that could be held (m^3)
Dam 2	4,380	2	8,760	

Note: volumes and areas have been calculated using SURPAC software.

As can be seen from the tables above, the volume of water that could be held by the Dam 2 is more than sufficient to capture the design storm event.

5.2.3. Catchment 3

Catchment 3 is in the north west corner of the site and comprises of clean water. Dam 3 is located centrally in this catchment at the lowest point. As the quarry progresses the size of the catchment will reduce and thus the required capacity of the dam will change in order to meet the design storm event criteria. Eventually the dam will be de-watered by pumping to either Dam 1 or Dam 2 and excavated. The surface water captured over this catchment will be treated as dirty water as extraction progresses.

Catchment 3 comprises Dam 3 and is approximately 3.4Ha in area with average slopes of approximately 5%. The size of this catchment will reduce over the extraction stages as dirty water is directed to catchment 2.

The following table summarises the Catchment 3 volumes required by the Blue Book calculations in *Appendix D.*

Table 15. Existing Catchment 3 Volumes

Catchment	Catchment Area (Ha)	Sediment Basin Storage (soil) volume (m^3)	Sediment Basin Storage (water) volume (m^3)	Dam Volume Required for 95th percentile, 5 day rainfall event (m^3)
3	3.73	-	1,476	1,476

Note: volumes and areas have been calculated using SURPAC software.

Table 16. Stage One to Three Catchment 3 Volumes

Catchment	Catchment Area (Ha)	Sediment Basin Storage (soil) volume (m^3)	Sediment Basin Storage (water) volume (m^3)	Dam Volume Required for 95th percentile, 5 day rainfall event (m^3)
3	3.59	-	1,420	1,420

Note: volumes and areas have been calculated using SURPAC software.

Table 17. Stage Four to Five Catchment 3 Volumes

Catchment	Catchment Area (Ha)	Sediment Basin Storage (soil) volume (m^3)	Sediment Basin Storage (water) volume (m^3)	Dam Volume Required for 95th percentile, 5 day rainfall event (m^3)
3	2.78	-	1,101	1,101

Note: volumes and areas have been calculated using SURPAC software.

The following table outlines the current estimated volume held in Dam 3 and its potential capacity assuming a freeboard of approximately 1m.

Table 18. Dam 3 Volume

Dam Identification/ Catchment	Dam Area (m^2)	Estimated Depth (m)	Estimated Volume (m^3)	Potential Volume that could be held (m^3)
Dam 3	7,494	2	14,988	22,482

Note: volumes and areas have been calculated using SURPAC software.

As can be seen from the tables above, the volume of water that could be held by the Dam 3 is more than sufficient to capture the design storm event. At this stage the dam is passively managed.

5.2.4. Catchment 4

Catchment 4 is in the north west corner of the site and comprises of clean water. The Dam is located to the north of this catchment at the lowest point. As the quarry progresses the size of the catchment will reduce and thus the required capacity of the dam will change in order to meet the design storm event criteria. Eventually the dam will be de-watered by pumping to Dam 2 and excavated. The surface water captured over this catchment will be treated as dirty water as extraction progresses.

Catchment 4 comprises Dam 4 and is approximately 4.2Ha in area with average slopes of approximately 5%. The size of this catchment will reduce over the extraction stages as dirty water is directed to catchment 2.

The following table summarises the Catchment 4 volumes required by the Blue Book calculations in *Appendix D.*

Table 19. Existing Catchment 4 Volumes

Catchment	Catchment Area (Ha)	Sediment Basin Storage (soil) volume (m^3)	Sediment Basin Storage (water) volume (m^3)	Dam Volume Required for 95th percentile, 5 day rainfall event (m^3)
4	4.21	-	1,665	1,665

Note: volumes and areas have been calculated using SURPAC software.

Table 20. Stage One to Two Catchment 3 Volumes

Catchment	Catchment Area (Ha)	Sediment Basin Storage (soil) volume (m^3)	Sediment Basin Storage (water) volume (m^3)	Dam Volume Required for 95th percentile, 5 day rainfall event (m^3)
3	4.13	-	1,634	1,634

Note: volumes and areas have been calculated using SURPAC software.

Table 21. Stage Three Catchment 3 Volumes

Catchment	Catchment Area (Ha)	Sediment Basin Storage (soil) volume (m^3)	Sediment Basin Storage (water) volume (m^3)	Dam Volume Required for 95th percentile, 5 day rainfall event (m^3)
3	2.83	-	1,119	1,119

Note: volumes and areas have been calculated using SURPAC software.

Table 22. Stage Four Catchment 3 Volumes

Catchment	Catchment Area (Ha)	Sediment Basin Storage (soil) volume (m^3)	Sediment Basin Storage (water) volume (m^3)	Dam Volume Required for 95th percentile, 5 day rainfall event (m^3)
3	2.15	-	850	850

Note: volumes and areas have been calculated using SURPAC software.

The following table outlines the current estimated volume held in Dam 4 and its potential capacity assuming a freeboard of approximately 1m.

Table 23. Dam 1 Volume

Dam Identification/ Catchment	Dam Area (m^2)	Estimated Depth (m)	Estimated Volume (m^3)	Potential Volume that could be held (m^3)
Dam 4	14,480	2	28,960	43,440

Note: volumes and areas have been calculated using SURPAC software.

As can be seen from the tables above, the volume of water that could be held by the Dam 3 is more than sufficient to capture the design storm event. At this stage the dam is passively managed.

5.2.5. Final Stage Catchment

By the final excavation stages the total catchment area will be directed to a dam located in the north east. The final catchment will be approximately 38Ha, including the rural/residential catchment east of Roberts Road. Extraction will have proceeded to 185m AHD and a spillway will be designed to overtop at 192m AHD. At this height the potential volume of the final dam would be approximately 945,300 cubic metres (assuming an average depth of 7m).

Site Catchment is approximately 28 Ha in area with average slopes of approximately 9%. It has been assumed that the entire site has been rehabilitated in this calculation and negligible sediment entrainment occurs.

Rural/Residential Catchment to the east is approximately 10.8 Ha with average slopes of 9%.

The following table summarises the catchment volumes required by the Blue Book calculations in *Appendix D.*

Table 24. Existing Catchment 4 Volumes

Catchment	Catchment Area (Ha)	Sediment Basin Storage (soil) volume (m^3)	Sediment Basin Storage (water) volume (m^3)	Dam Volume Required for 95th percentile, 5 day rainfall event (m^3)	Estimation of Final Dam capacity (m^3)
Site Catchment	28	-	11,076	11,076	945,300
Rural/Residential Catchment	11	-	4,288	4,288	
Total	39	-	15,364	15,364	

Note: volumes and areas have been calculated using SURPAC software.

As can be seen from the tables above, the volume of water that could be held by the Dam in the final landform is more than sufficient to capture the design storm event.

5.3. Final Landform

The final landform according to the EIS is to slope gently (between 1:3 and 1:4) from the native trees screens along Old Northern Road and from the planted bunds along Roberts Road to the dam in the north-western corner. A permanent dam will be retained in the north east corner of the site as described above.

5.4. Transfer of Water Offsite

The following management procedures will be followed when excess surface water is to be transferred to neighbouring land owned by Mr Tony Portelli.

- Under an agreement signed by Mr Tony Portelli and Mr Martin Hodgson of the Maroota Quarry water will only be transferred when mutually agreeable to both parties thus Mr Portelli will be contacted prior to any transfer occurring.
- Water transferred to the neighbouring land owned by Mr Toni Portelli will be tested for relevant pollutants prior to pumping.
- Only water that meets the described criteria will be released.
- Records of all water testing will be held on site.
- Records of dates and volumes of transfer of water will be held on site.
- Pumping of the water will be supervised by HB Maroota staff to ensure that overtopping of the receiving dam does not occur.

Pumping will cease immediately if contamination of the water to be transferred is suspected

5.4.1. Risk Assessment

The water transferred to Mr Portelli's property is intended to be used for stock water and irrigation. In this respect a basic risk assessment for water to be used for that purpose is outlined below.

Table 25. Risk Assessment

Analyte	Guideline (ANZECC 2000- Primary Industries)	Comment	Activity/Process Assessment	Risk
pH	6.0 – 9.0 for surface water	Soil and animal health will not generally be affected by water with pH in the range of 4–9. Corrosion potential of pumping, irrigation and stock watering systems increases as pH drops below 6.	Ground water used in the area for stock watering ranges from a pH as low as 4 to 7. Surface waters are generally around pH 7. pH will be tested prior to transfer and adjusted if required.	Moderate
Biological Parameters	various	Presence may be harmful to stock health.	The quarry process does not involve processing of biological waste or products such as effluent that could potentially contaminate the water to be transferred. No potential nutrients are used in the process that could contribute to algal growth.	Low
Calcium	<1000mg/L	Palatability of water affected. Potential health effects to stock in higher concentrations.	Groundwater in the area is low in calcium. The quarry activities do not involve processes that could contribute to high levels of calcium. Lime may be used to adjust the pH level of transfer water however which may increase calcium levels.	Low
Magnesium	<2000mg/L	Potential health effects to stock in higher concentrations.	Groundwater in the area is low in magnesium. The quarry activities do not involve processes that could contribute to high levels of magnesium.	Low
Nitrate	<400mg/L	Potential health effects to stock in higher concentrations.	The quarry activities do not involve processes that could contribute to high levels of nitrate. Fertilisation of rehabilitation areas may contribute to the nitrate load.	Low
Nitrite	<30mg/L	Potential health effects to stock in	The quarry activities do not involve processes that could contribute to high levels of nitrite. Fertilisation of	Low

Analyte	Guideline (ANZECC 2000- Primary Industries)	Comment	Activity/Process Assessment	Risk
		higher concentrations.	rehabilitation areas may contribute to the nitrite load.	
Sulphate	<1000mg/L	Potential health effects to stock in higher concentrations.	The quarry activities do not involve processes that could contribute to high levels of Sulphate.	Low
Total Dissolved Solids (TDS)	<4000mg/L	Potential health effects to stock in higher concentrations.	Groundwater in the area is low in TDS. The quarry activities do not involve processes that could contribute to high levels of TDS except perhaps evaporation.	Low
Metals	Various	Potential health effects to stock.	The quarry activities do not involve processes that could contribute to high levels of metals.	Low
Pesticides	Various	Potential health effects to stock.	The quarry activities do not involve processes that could contribute to high levels of Pesticides.	Low
Hydrocarbons	Various	Potential health effects to stock.	The quarry plant and machinery use diesel fuels and oils to operate. There is a potential risk of hydrocarbon contamination	Moderate
Total Suspended Solids	No Guideline, however recommended <50mg/L for aquatic ecosystems	Generally not harmful to stock. May affect aquatic ecosystems.	There is the potential for suspended solids to be entrained in the transfer water although the risk to stock in minimal.	Moderate

5.4.2. Water Testing

It is proposed that water testing parameters include:

- pH
- Electrical Conductivity
- Total Suspended Solids
- Visual inspection for Oil and Grease and test if presence observed to confirm
- Visual inspection for algal blooms

Should the conductivity be observed to be of a level of concern >2000µS/cm, pumping will cease and further testing will be conducted as listed below to determine the best course of action.

- Calcium
- Magnesium
- Sodium (to estimate TDS)
- Potassium (to estimate TDS)
- Chloride (to estimate TDS)
- Nitrate
- Nitrite
- Sulphate

5.4.3. General Procedures

- In the event of offsite discharge being required, prior to discharge via spillway from northern dam, water will be analysed to determine whether EPA criteria of 50 mg/L total suspended solids is met. If not met, chemical flocculation will occur prior to discharge.
- No discharge of water off-site has occurred and all water retained on site has been utilised in the processing of extracted material.
- Sediment laden water pumped into the holding dam is allowed settle prior to pumping back into the process dam. This ensures that no sediment escapes the site and maintains water quality in the process dam.
- All hydrocarbon (fuel/oil) spills will be contained and prevented from entering the surface or groundwater systems.
- All water quality control structures will be designed to ensure zero net impact on receiving waters up to the 1% AEP storm event for suspended solids, total phosphorus, and total nitrogen

5.5. Contaminated Water

One of the main sources of potential water contamination, aside from sediment from the quarry, is hydrocarbons from fuels and oils used by the plant on the site. The risk of hydrocarbons entering the water system is minimised by restricting all plant and vehicle repair and maintenance to the designated workshop area. All contractors are required to carry a spill kit and to notify the Site Manager immediately a spill occurs.

Waste and contaminated material is removed off site by a licenced waste contractor.

5.6. Recycling of Water

The quarry currently endeavours to recycle as much water on site as possible. Water collected in the sediment dams is used for dust suppression, rehabilitation works and for processing operations as described in *Section 3.4.3.* These practices will be continued and reduces the requirement to discharge.

5.7. Diversion Drains

If new diversion drains are required they will be designed with a sufficient capacity to convey runoff from a 1 in 10 year storm. They will be trapezoidal in shape and have side batters of 1 in 3 to enable maintenance of the structures (see *Appendix E).*

Where steep grades are required which result in flow velocities that may cause scour, the drains shall be lined with appropriate scour protection, e.g. rock, jute mesh, rip rap etc.

5.8. Decommissioning of Water Management Structures

Water management structures, including storage and sedimentation dams are to be decommissioned after use. Temporary sediment traps, ponds and channels are to be removed and graded towards the active extraction area. Fines remaining within the sediment device will be removed by front end loader and place within cells to be rehabilitated. Temporary sediment controls such as filter fencing and diversion banks will be used until the area has stabilised as part of site rehabilitation.

The main water process dam will remain in place in the final landform. The sedimentation basin and spillway lading into this dam will only be removed once all extraction has ceased on the site and rehabilitation has occurred sufficiently to reduce sediment load entering the dam.

Section 6. Soil Management

6.1. General Instructions

The control of erosion and sedimentation at Maroota focusses on source reduction measures. In general these measures include:

- Read the SWMP with the engineering plans and any other plans or written instructions issued in relation to development at the subject site.
- Ensure contractors undertake all soil and water management works as instructed in this specification and constructed following the guidelines stated in Department of Housing (2008) (the "Blue Book").
- Inform all subcontractors of their responsibilities in minimising the potential for soil erosion and pollution to downslope areas.

6.2. Works Sequence

- All works are to be undertaken following the engineering plans
- Topsoil will be stripped and stockpiled in the rehabilitated previous active cell.
- Construct earth banks (Stormwater Collection Drains) to divert as much clean water as possible and capture the dirty water.
- Rehabilitate lands previously used to stockpile topsoil with clay residue materials and previously stockpiled topsoil.
- Install barrier fencing to limit access to rehabilitated areas.
- Ensure management practices are carried out to minimise areas being affected by wind and water erosion.

6.3. Erosion Control

- The soil erosion hazard on the site will be kept as low as practicable by minimising disturbance. Some ways of doing this are outlined in *Table 26.*
- Extraction will take place within a defined work area and materials will be transported only within the site for processing.
- Entry to land not involved directly in the extraction process will be prohibited and will be managed as natural grassland.
- Limit vehicular access to the site to that essential for construction work.

Table 26. Limitations to Access

Landuse	Access Limitations	Comments
Extraction	Land disturbances beyond five (preferably two) metres from the edge of the operations are prohibited.	All site workers should clearly recognise these areas and they should be clearly marked — suitable materials include barrier mesh, sediment fencing, etc. The project manager will determine their actual location on site. They can vary in position to conserve existing vegetation best while being considerate of the needs of efficient works activities.
Access Roads	Roads and tracks are limited to a width that are the minimum necessary to allow safe operation of heavy equipment	
Remaining Lands	Land disturbances are prohibited except for essential management works.	

- Here, rehabilitation means achieving a C-factor (Revised Universal Soil Loss Equation) of less than 0.1 and set in motion a program that should ensure it will drop permanently, by reducing the risk of erosion by vegetation, paving, armouring, etc. as soon as practicable after extraction activities cease.

NOTE: The cover factor, C, is the ratio of soil loss from land under specified crop or mulch conditions to the corresponding loss from continuously tilled, bare soil. A C-factor of 1.0 corresponds to that of bare soil.

- While C-factors are likely to rise to 1.0 during the work's program, they should not exceed those given in *Table 27* within the specified times.

Table 27. Maximum acceptable C-factors at nominated times during works

Lands	Maximum C-Factor	Remarks
Waterways and other areas subjected to concentrated flows, post construction.	0.05	Applies after ten working days from completion of formation and before they are allowed to carry any concentrated flows. Flows are limited to those indicated in "Blue Book". Foot and vehicular traffic are prohibited in these areas.
Stockpiles, post clearance	0.1	Applies after ten working days from completion of formation.
All lands, including waterways and stockpiles during construction	0.15	Applies after 20 working days of inactivity, even though works might continue later.

Note: *working days* does not include public holidays, weekends or days when work is not possible due to wet weather.

- The required C factors can be achieved in the short term (temporary protection for up to six months) with either:
  - a suitable soil binder in areas of sheet flow, e.g. topsoil stockpiles
  - anionic bitumen emulsion sprayed over hessian cloth (at 0.5 L/m2) in areas of concentrated flow, e.g. diversion banks and waterways
  - a temporary vegetative cover.
- Apply any soil binders employed following the manufacturer's instructions.

- A suggested listing of suitable plant species is shown in *Table 28.* Before sowing, additional tests should be undertaken to assess the requirements of ameliorants such as lime to help plant growth.

Table 28. Plant Species for Temporary Cover

Sowing Season	Seed Mix
Autumn/Winter	Oats @ 40kg/Ha Japanese Millet @ 10kg/Ha
Spring/Summer	Oats @ 20kg/Ha Japanese Millet @ 20kg/Ha

- While ever the C-factor is higher than 0.1, maintain the lands in a condition that resists removal by wind. This can be achieved by:
    - keeping moist (not wet) by sprinkling with water
    - where practicable, leaving the surface in a cloddy state.
- Notwithstanding the above, schedule works so that the duration from the conclusion of land shaping to completion of final stabilisation is less than:
    - 10 days on slopes steeper than 30 per cent
    - 20 days on slopes less steep than 30 per cent.
- Lands planted recently with grass species will be watered regularly until an effective cover has properly established and plants are growing vigorously. Follow-up seed and fertiliser will be applied as necessary in areas of minor soil erosion and/or inadequate vegetative protection.
- Where practicable, keep foot and vehicular traffic away from all recently stabilised areas.
- Stockpiles of topsoil to be located at least five metres from areas of likely concentrated or high velocity flows, especially drainage lines and access roads. If necessary, earth banks or drains will be constructed to divert localised run-on.
- Replace soil materials in the same order they are removed from the ground. It is particularly important that all subsoils are buried and topsoils remain on the surface at the completion of works.
- Earth batters can have maximum gradients of 2(H):1(V) during the works program but will be laid back to lower grades before the rehabilitation program starts. Final batter gradients should not exceed 4:1 on northerly and westerly facing batters and 3:1 on batters with other aspects.
- All waterways, drains, spillways and outlets will be constructed to be stable in accordance with the "Blue Book" for soils with high erodibilities.
- Topsoil stockpiles are not to exceed 3m in height with a minimum crest width of 3m and are to be seeded with a temporary vegetation cover if stockpiles are to remain longer than 14 days.
- Topsoil is to be stripped in a moist condition to avoid pulverisation and dust.

Section 7. Monitoring and Maintenance

Monitoring of the soil erosion, sediment and water is undertaken monthly and recorded on the Monthly Site Audit Checklist (see *Appendix L*).

- Topsoil stripping to be visually monitored to check moisture content of soil and depth of stripping.
- Stockpiles to be visually assessed at time of forming to check they do not exceed three metres high.
- Automatic data loggers to monitor the groundwater table to ensure extraction remains two metres above the wet weather groundwater level. Monitoring bore locations shown on *Figure C1.*
- Visual check of stability and operation of all banks, ponds, channels and spillways to be undertaken monthly. Effecting any necessary repairs.
- removal of spilled sand or other materials from hazard areas, including lands closer than five metres from areas of likely concentrated or high velocity flows, especially waterways and access roads.
- removal of trapped sediment whenever less than design capacity remains for the sediment basins.
- ensuring rehabilitated lands have effectively reduced the erosion hazard and initiate upgrading or repair as appropriate.
- constructing additional erosion and/or sediment control works as might become necessary to ensure the desired water control is achieved.

7.1. Reporting

- Any topsoil management issues will be reported annually to NSW Planning and Environment Services in the Conditions Compliance Report for the first 3 years after commencing extraction in the new areas
- Annual update of this plan to be provided to NOW. Compliance report annually for first three years to NSW Planning and Environment Services
- Any encounter with groundwater as advised by NOW is to be reported to the NSW Planning and Environment Services.

7.2. Emergency Response

- If extraction encounters groundwater, work will immediately cease and investigations into the water source are undertaken. The location and elevation of the possible groundwater encounter is to be reported to NOW so that they may determine whether the water table is within a perched aquifer or within the regional groundwater resource. Work is to cease until NOW advises. If no advice received within 24 hours, work will continue where possible in areas not affected by the encounter until such time as advice is received. Where not possible to move to another area of extraction, no further depth will be extracted until NOW advice received.
- Should areas of soil erosion be identified, steps will be taken to ensure no further erosion takes place as soon as practicable and remediation of the area will be

undertaken. This may entail the use of diversion banks, filling, shaping, revegetation, geo-fabrics, hydromulch and chemical binders to stabilise the soil and regular inspections and maintenance to monitor the rehabilitation progress.

7.3. Responsibility

- Plant Manager - for implementing sedimentation control measures and monitoring as required
- All staff - for identifying where sediment controls required and for implementing procedures.

Section 8. References

Ref. 1. ANZMEC and Minerals Council of Australia (2000) *Strategic Framework for Mine Closure*

Ref. 2. Managing Urban Stormwater Soils and Construction Volume 2E Mines and Quarries (DECC, 2008)

Ref. 3. New South Wales Coal Association (February 1995) – *Mine Rehabilitation*

Ref. 4. Pers. Com. Martin Hodgson- *Quarry Manager.*

Ref. 5. Nexus (1999)- *Environmental Impact Statement*

Ref. 6. Nexus (2015)- *Environmental Assessment*

Ref. 7. Sean Harris, Morse McVey and Associates Pty Ltd (1999)- *Soil and Water Management Plan*

Appendix A: Figures

Plan of:	Maroota Quarry Soil Water Management Plan - Site Locality	***Location:***	Maroota Quarry, Maroota NSW	***Source:***	Google Earth Pro	***Our Ref:***	1557_SWMP_C001_V0.cdr
Figure:	ONE	***Council:***	Hills Shire Council	***Survey:***	Not Surveyed	***Plan By:***	JD
Sheet:	1 of 1	***Tenures:***	N/A	***Projection:***	MGA	***Project Manager:***	GVT
Version/Date:	V0 15/05/2015	***Client:***	Hodgson Quarry Products Pty Ltd	***Contour Interval:***	N/A	***Office:***	Thornton

vgt
Environmental Compliance Solutions

Approx Scale: 0 1 2 3 4 5km

Approx Scale: 0 100 200 300 400 500m

Plan of:	Maroota Quarry Soil Water Management Plan - Ground Water Monitoring Sites	***Location:***	Maroota Quarry, Maroota NSW	***Source:***	Photomapping	***Our Ref:***	1557_SWMP_C002_V0_F2.cdr
Figure:	TWO	***Council:***	Hills Shire Council	***Survey:***	December 2013	***Plan By:***	TO
Sheet:	1 of 1	***Tenures:***	N/A	***Projection:***	MGA	***Project Manager:***	GVT
Version/Date:	V0 15/05/2015	***Client:***	Hodgson Quarry Products Pty Ltd	***Contour Interval:***	1m	***Office:***	Thornton

vgt Environmental Compliance Solutions

N

0 20 40 60 80 100m

VGT Pty Ltd 4/30 Glenwood Drive, Thornton NSW 2322 PO Box 2335, Greenhills NSW 2323 ph: (02) 4028 6412 fax: (02) 4028 6413 email: mail@vgt.com.au www.vgt.com.au ABN: 79 103 636 353

Plan of:	Maroota Quarry Soil Water Management Plan - Existing Catchments	***Location:***	Maroota Quarry, Maroota NSW	***Source:***	Photomapping	***Our Ref:***	1557_SWMP_C003_V0_F3.cdr
Figure:	THREE	***Council:***	Hills Shire Council	***Survey:***	December 2013	***Plan By:***	TO
Sheet:	1 of 1	***Tenures:***	N/A	***Projection:***	MGA	***Project Manager:***	GVT
Version/Date:	V0 20/05/2015	***Client:***	Hodgson Quarry Products Pty Ltd	***Contour Interval:***	1m	***Office:***	Thornton

vgt Environmental Compliance Solutions

N

0 20 40 60 80 100m

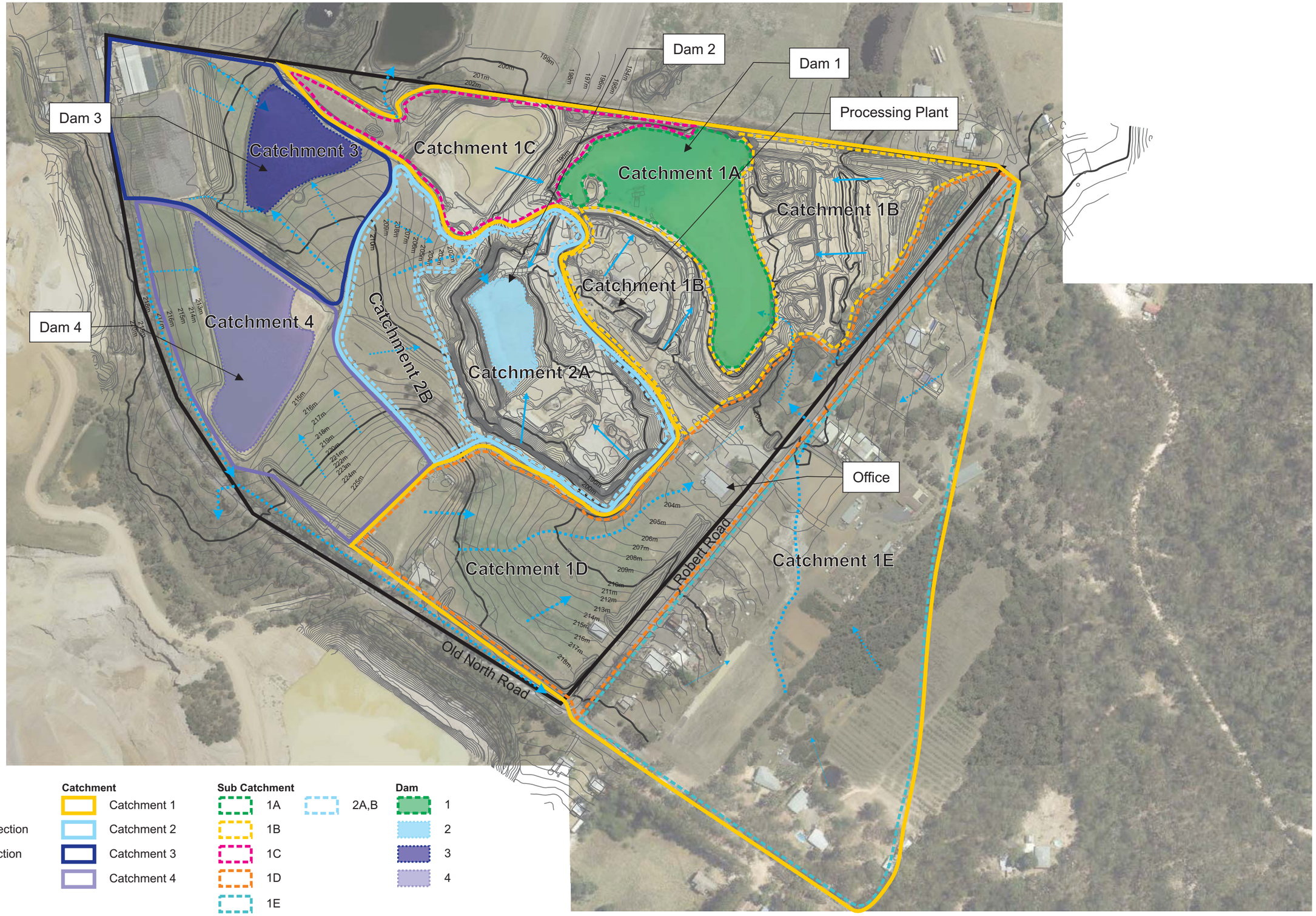

Legend

- Site
- Clean Water Flow Direction
- Dirty Water Flow Direction
- Drainage Lines

Catchment

- Catchment 1
- Catchment 2
- Catchment 3
- Catchment 4

Sub Catchment

- 1A
- 1B
- 1C
- 1D
- 1E
- 2A,B

Dam

- 1
- 2
- 3
- 4

VGT Pty Ltd 4/30 Glenwood Drive, Thornton NSW 2322 PO Box 2335, Greenhills NSW 2323 ph: (02) 4028 6412 fax: (02) 4028 6413 email: mail@vgt.com.au www.vgt.com.au ABN: 79 103 636 353

Plan of:	Maroota Quarry Soil Water Management Plan - Phase One	***Location:***	Maroota Quarry, Maroota NSW	***Source:***	Photomapping	***Our Ref:***	1557_SWMP_C004_V1_F4.cdr
Figure:	FOUR	***Council:***	Hills Shire Council	***Survey:***	December 2013	***Plan By:***	TO
Sheet:	1 of 1	***Tenures:***	N/A	***Projection:***	MGA	***Project Manager:***	GVT
Version/Date:	V1 29/05/2015	***Client:***	Hodgson Quarry Products Pty Ltd	***Contour Interval:***	1m	***Office:***	Thornton

vgt Environmental Compliance Solutions

N

0 20 40 60 80 100m

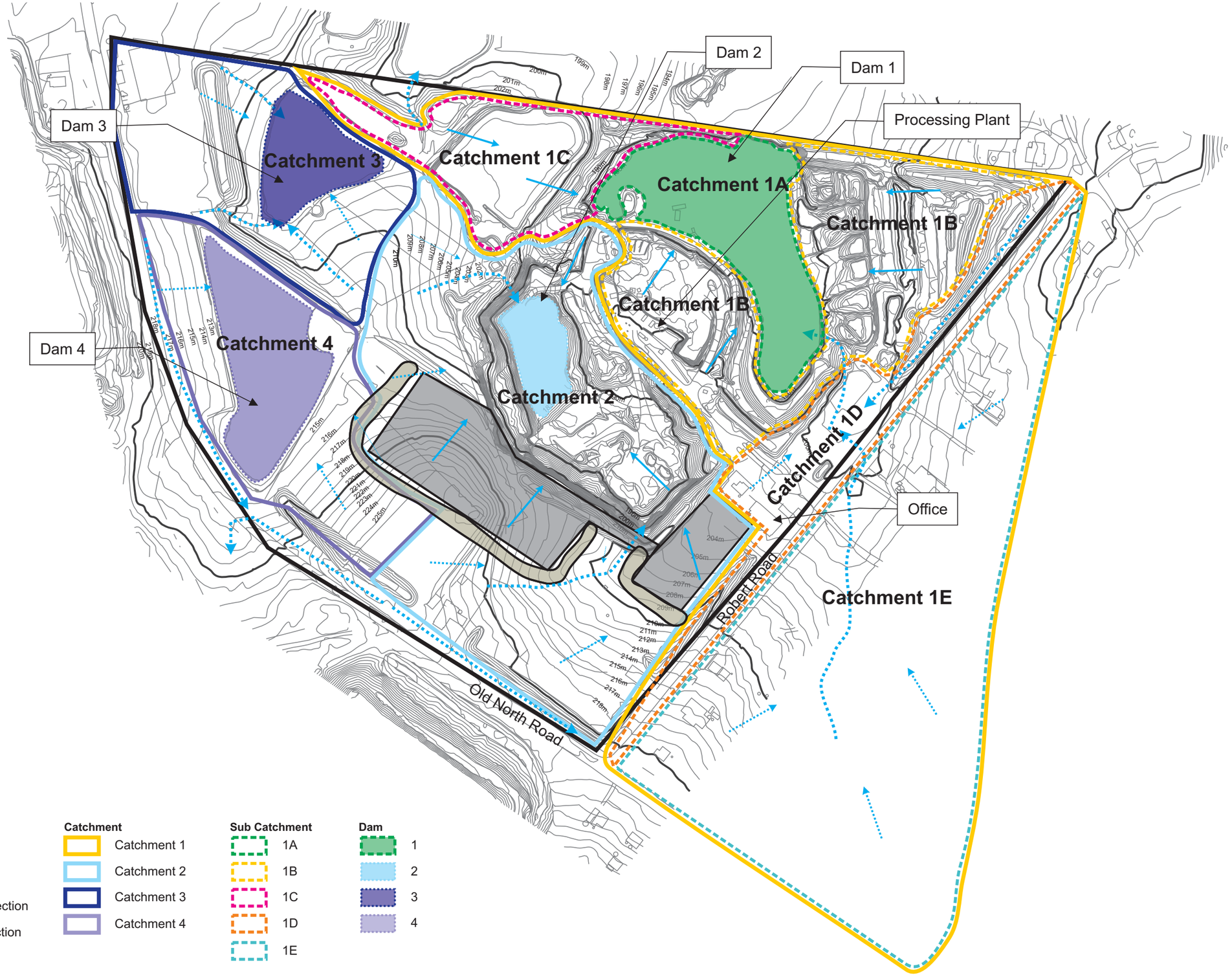

Plan of:	Maroota Quarry Soil Water Management Plan - Phase TWO	***Location:***	Maroota Quarry, Maroota NSW	***Source:***	Photomapping	***Our Ref:***	1557_SWMP_C005_V1_F5.cdr
Figure:	FIVE	***Council:***	Hills Shire Council	***Survey:***	December 2013	***Plan By:***	TO
Sheet:	1 of 1	***Tenures:***	N/A	***Projection:***	MGA	***Project Manager:***	GVT
Version/Date:	V1 29/05/2015	***Client:***	Hodgson Quarry Products Pty Ltd	***Contour Interval:***	1m	***Office:***	Thornton

vgt Environmental Compliance Solutions

N

0 20 40 60 80 100m

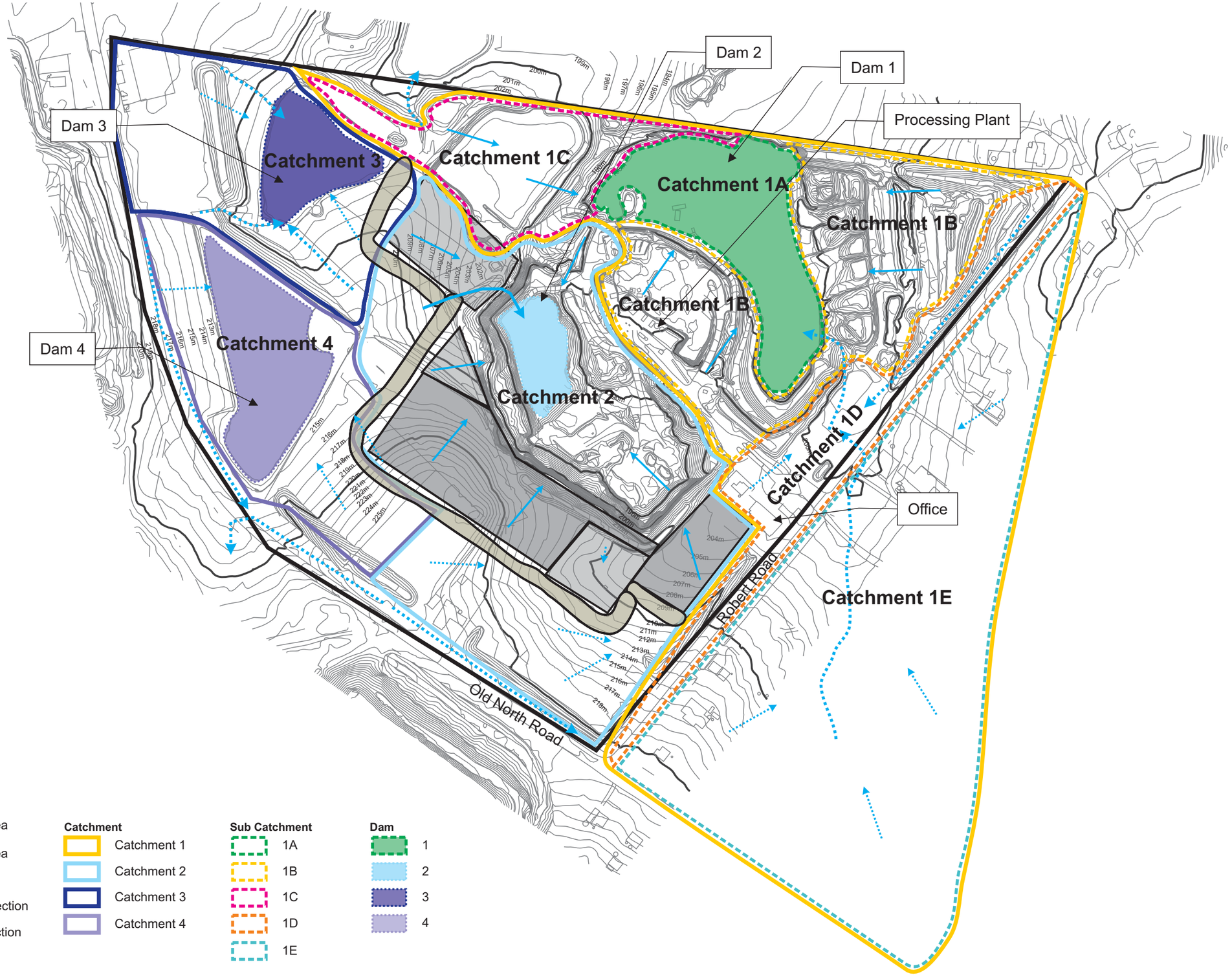

Plan of:	Maroota Quarry Soil Water Management Plan - Phase Three	***Location:***	Maroota Quarry, Maroota NSW	***Source:***	Photomapping	***Our Ref:***	1557_SWMP_C006_V1_F6.cdr
Figure:	SIX	***Council:***	Hills Shire Council	***Survey:***	December 2013	***Plan By:***	TO
Sheet:	1 of 1	***Tenures:***	N/A	***Projection:***	MGA	***Project Manager:***	GVT
Version/Date:	V1 29/05/2015	***Client:***	Hodgson Quarry Products Pty Ltd	***Contour Interval:***	1m	***Office:***	Thornton

vgt Environmental Compliance Solutions

N

0 20 40 60 80 100m

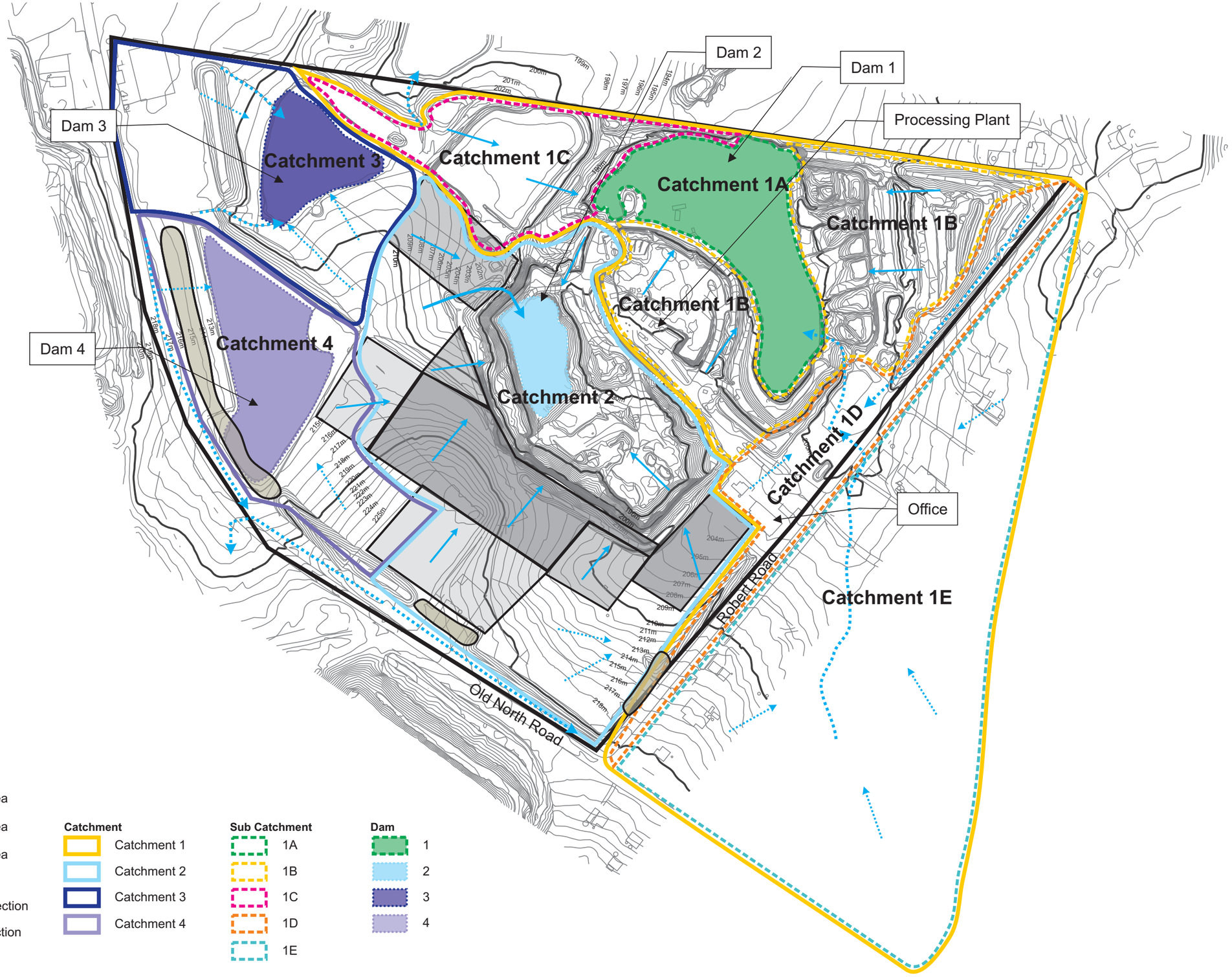

Plan of:	Maroota Quarry Soil Water Management Plan - Phase Four	***Location:***	Maroota Quarry, Maroota NSW	***Source:***	Photomapping	***Our Ref:***	1557_SWMP_C007_V1_F7.cdr
Figure:	SEVEN	***Council:***	Hills Shire Council	***Survey:***	December 2013	***Plan By:***	TO
Sheet:	1 of 1	***Tenures:***	N/A	***Projection:***	MGA	***Project Manager:***	GVT
Version/Date:	V1 29/05/2015	***Client:***	Hodgson Quarry Products Pty Ltd	***Contour Interval:***	1m	***Office:***	Thornton

vgt Environmental Compliance Solutions

N

0 20 40 60 80 100m

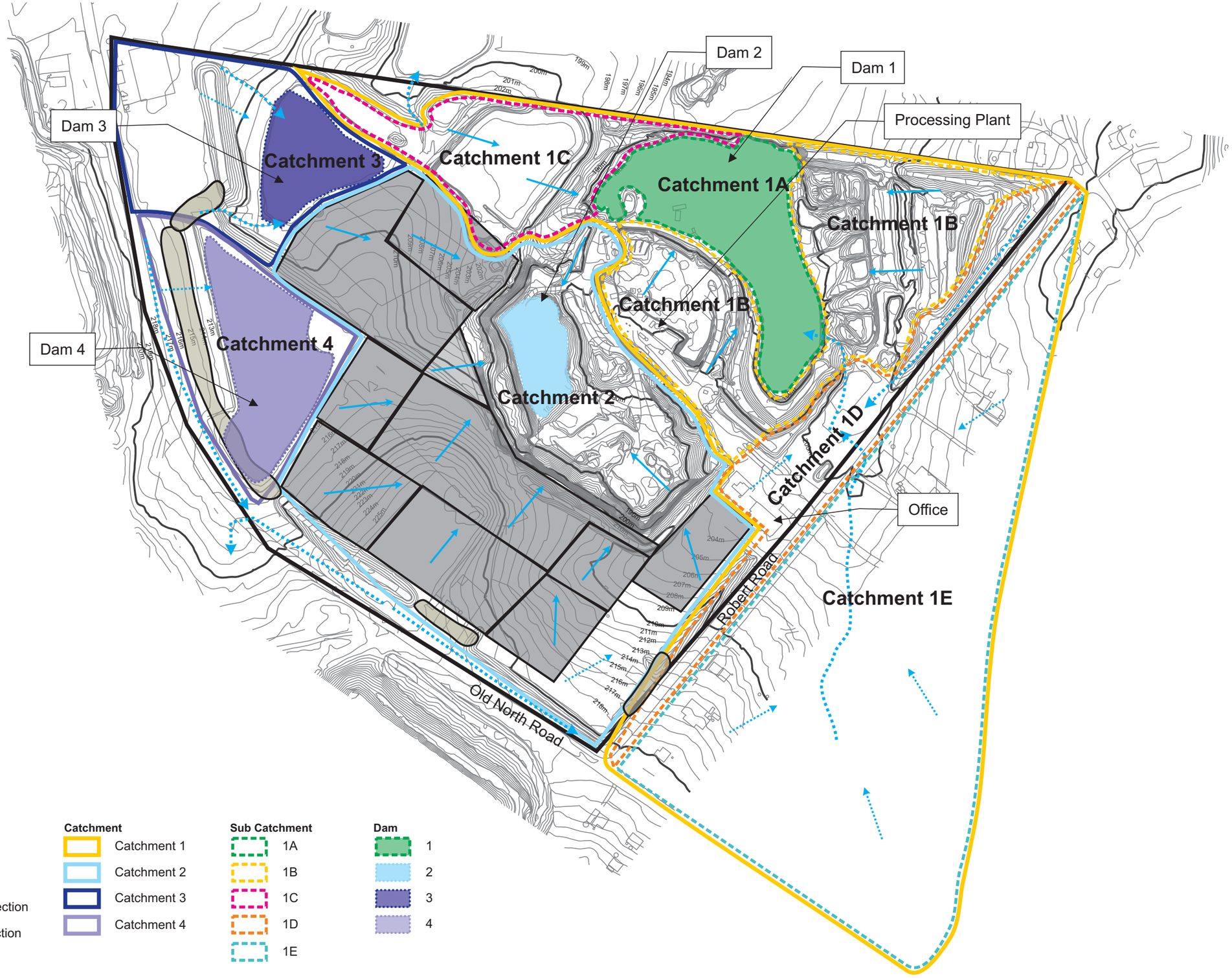

Plan of:	Maroota Quarry Soil Water Management Plan - Phase Five	***Location:***	Maroota Quarry, Maroota NSW	***Source:***	Photomapping	***Our Ref:***	1557_SWMP_C008_V1_F8.cdr
Figure:	EIGHT	***Council:***	Hills Shire Council	***Survey:***	December 2013	***Plan By:***	TO
Sheet:	1 of 1	***Tenures:***	N/A	***Projection:***	MGA	***Project Manager:***	GVT
Version/Date:	V1 29/05/2015	***Client:***	Hodgson Quarry Products Pty Ltd	***Contour Interval:***	1m	***Office:***	Thornton

vgt Environmental Compliance Solutions

N

0 20 40 60 80 100m

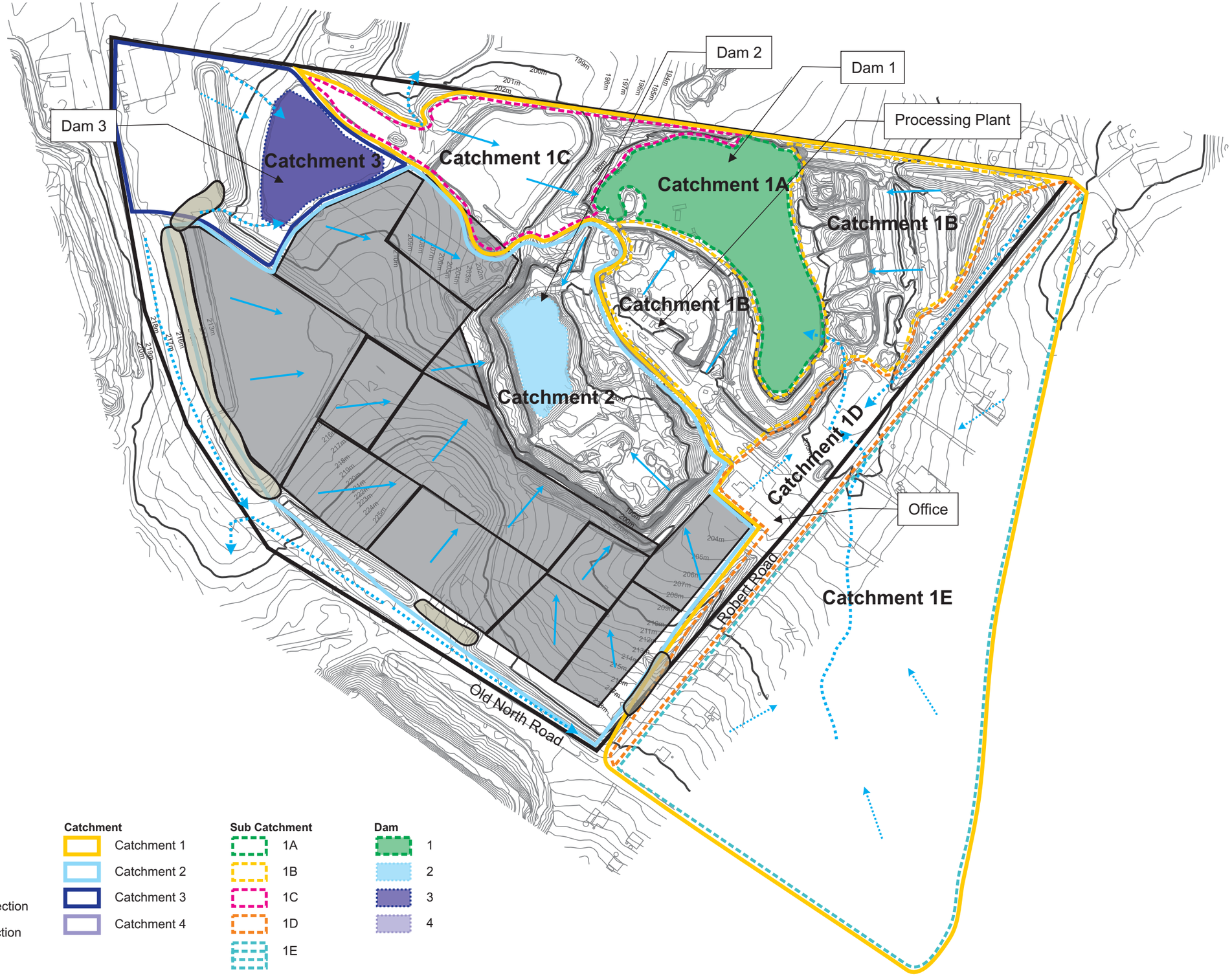

Legend

- Site
- Extraction Area
- Bund
- Clean Water Flow Direction
- Dirty Water Flow Direction
- Drainage Lines

Catchment

- Catchment 1
- Catchment 2
- Catchment 3
- Catchment 4

Sub Catchment

- 1A
- 1B
- 1C
- 1D
- 1E

Dam

- 1
- 2
- 3
- 4

VGT Pty Ltd 4/30 Glenwood Drive, Thornton NSW 2322 PO Box 2335, Greenhills NSW 2323 ph: (02) 4028 6412 fax: (02) 4028 6413 email: mail@vgt.com.au www.vgt.com.au ABN: 79 103 636 353

Plan of:	Maroota Quarry Soil Water Management Plan - Phase Six	***Location:***	Maroota Quarry, Maroota NSW	***Source:***	Photomapping	***Our Ref:***	1557_SWMP_C009_V1_F9.cdr
Figure:	NINE	***Council:***	Hills Shire Council	***Survey:***	December 2013	***Plan By:***	TO
Sheet:	1 of 1	***Tenures:***	N/A	***Projection:***	MGA	***Project Manager:***	GVT
Version/Date:	V1 29/05/2015	***Client:***	Hodgson Quarry Products Pty Ltd	***Contour Interval:***	1m	***Office:***	Thornton

vgt Environmental Compliance Solutions

N

0 20 40 60 80 100m

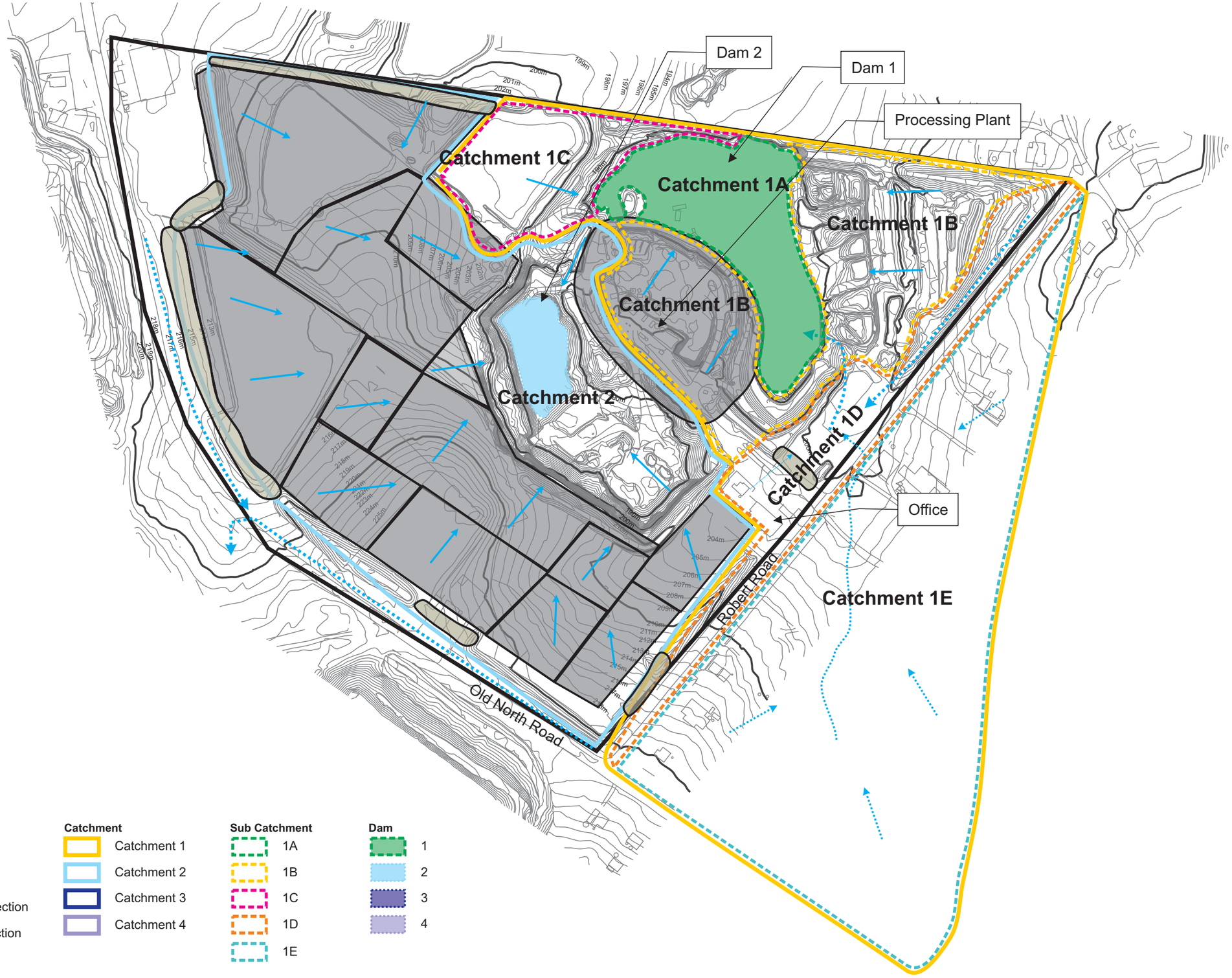

Legend

- Site
- Extraction Area
- Bund
- Clean Water Flow Direction
- Dirty Water Flow Direction
- Drainage Lines

Catchment
- Catchment 1
- Catchment 2
- Catchment 3
- Catchment 4

Sub Catchment
- 1A
- 1B
- 1C
- 1D
- 1E

Dam
- 1
- 2
- 3
- 4

VGT Pty Ltd 4/30 Glenwood Drive, Thornton NSW 2322 PO Box 2335, Greenhills NSW 2323 ph: (02) 4028 6412 fax: (02) 4028 6413 email: mail@vgt.com.au www.vgt.com.au ABN: 79 103 636 353

Plan of:	Hodgson Maroota Quarry Final Landform	***Location:***	Hodgson Maroota Quarry, Maroota	***Source:***	Photomapping	***Our Ref:***	1557_SWMP_C010_V0_F10.cdr
Figure:	TEN	***Council:***	Hills Shire Council	***Survey:***	December 2013	***Plan By:***	TO
Sheet:	1 of 1	***Tenures:***	N/A	***Projection:***	Plan	***Project Manager:***	GVT
Version/Date:	0 29/5/2015	***Client:***	Hodgson Quarry Products Pty Ltd	***Contour Interval:***	1m	***Office:***	Thornton

vgt
Environmental Compliance Solutions

VGT Pty Ltd 4/30 Glenwood Drive, Thornton NSW 2322 PO Box 2335, Greenhill NSW 2323 ph: (02) 4028 6412 fax: (02) 4028 6413 email: mail@vgt.com.au www.vgt.com.au ABN: 79 103 636 353

Appendix B: Consent Conditions

ENVIRONMENTAL PLANNING AND ASSESSMENT ACT 1979

DETERMINATION OF A DEVELOPMENT APPLICATION UNDER SECTION 80(1) OF THE ENVIRONMENTAL PLANNING AND ASSESSMENT ACT 1979

I, the Minister for Urban Affairs and Planning, under Section 80(1) of the Environmental Planning and Assessment Act, 1979 (the Act), determine the Development Application referred to in Schedule 1 by granting consent to the Application, subject to the conditions set out in Schedule 2.

The reason for the imposition of conditions is to minimise any adverse environmental effects of the development, consistent with the objectives of the Act.

Andrew Refshauge MP
Minister for Urban Affairs and Planning

Sydney 31 May 2000 File No. S98/00772

SCHEDULE 1

Application made by:	Dr L. S. Martin ('the Applicant").
To:	The Minister for Urban Affairs and Planning ("the Minister").
In respect of:	Lots 1 and 2 DP 228308, Lot 2 DP 312327, Roberts Road, Maroota, in the Baulkham Hills Local Government Area.
For the following:	Extraction and on-site processing of sand, clay and pebble; construction of a bund wall.
Development Application:	DA No. 267-11-99 lodged with the Department of Urban Affairs and Planning on 22 November 1999, accompanied by a Environmental Impact Statement prepared by Nexus Environmental Planning Pty Ltd. and dated November 1999.
Determination:	1) To ascertain the date upon which the consent becomes effective, refer to Section 83 of the Act. 2) To ascertain the date upon which the consent is liable to lapse, refer to Section 95 of the Act. 3) Section 97 of the Act confers on an applicant who is dissatisfied with the determination of a consent authority a right of appeal to the Land and Environment Court exercisable within 12 months after receipt of notice.

SCHEDULE 2

Conditions of Development Consent

Abbreviations and Interpretation

The Act	*Environmental Planning and Assessment Act 1979*, as amended.
Approval from EPA	means approved in writing by the EPA or as specified as a condition of a licence.
BCA	Building Code of Australia
construction	construction of the perimeter bund wall
Council	Baulkham Hills Shire Council
DA	Development Application
DCP 500	Baulkham Hills Shire Council Development Control Plan No. 500 – Extractive Industry
The Department	the Department of Urban Affairs and Planning
The Director-General	Director-General of the Department of Urban Affairs and Planning, or nominee
DLWC	Department of Land and Water Conservation
EIS	Environmental Impact Statement
EMP	Environmental Management Plan
EPA	Environment Protection Authority
EPA Licence	means a licence under the *Protection of the Environment Operations Act 1997*
GTA	General Term of Approval
$L_{A10(15\ minute)}$	is the sound pressure level that is exceeded for 10% of the time when measured over a 15 minute period.
NPWS	National Parks and Wildlife Service
PCA	Principal Certifying Authority
Subject Site	Lots 1 and 2 DP 228308, Lot 2 DP 312327, Roberts Road, Maroota, in the Baulkham Hills Local Government Area.

INTEGRATED DEVELOPMENT

Integrated development is development (not being complying development) that, in order for it to be carried out, requires development consent and one or more of the approvals set out in the Act. The subject proposal is integrated development, as it requires development consent and the approval of the Environment Protection Authority under the *Protection of the Environment Operations Act 1997* and, the approval of the Department of Land and Water Conservation under Parts 2 and 5 of the *Water Act 1912*. The general terms of approval of both the EPA and the DLWC therefore form part of this Consent.

GENERAL

Obligation to Prevent and Minimise Harm to the Environment

1. There is an obligation on the Applicant to prevent and minimise harm to the environment throughout the life of the project. This requires that all practicable measures are to be taken to prevent and minimise harm that may result from the construction, operation and, where relevant, the decommissioning of the development.

Adherence to Terms of DA and EIS

2. Development shall be carried out in accordance with:
   (a) DA No. 267-11-99;

(b) the Environmental Impact Statement prepared by Nexus Environmental Planning Pty Ltd., dated November 1999, including the landscaping plan attached to the EIS;
(c) all additional information supplied to the Department in relation to the development including:

- the two faxes from Dick Benbow and Associates Pty Ltd. dated 17 February 2000 and attachments;
- the letter from Dick Benbow and Associates Pty Ltd dated 27 January 2000;
- the letter from Dick Benbow and Associates Pty Ltd dated 5 January 2000 and attachments;
- the fax from Holmes Air Sciences dated 21 December 1999;
- the letter from Nexus Environmental Planning Pty Ltd dated 21 December 1999 and attachments;
- the letter from Woodward-Clyde dated 21 December 1999; and,
- the letter from Woodward-Clyde dated 16 December 1999

except as modified by the following Conditions.

In the event of an inconsistency between this Consent and DA No. 267-11-99 (and the accompanying EIS), this Consent shall prevail.

Compliance

3. The Applicant shall comply with all reasonable requirements of the Director-General in respect of the implementation of the Conditions of this Consent, within such time as the Director-General agrees. The Director-General may order the Applicant to cease work until non-compliance has been addressed to the Director-General's satisfaction.

4. The Applicant shall ensure that all contractors and sub-contractors are aware of, and comply with, the Conditions of this Consent.

5. The Applicant shall comply with all relevant conditions prescribed in Part 7 of the *Environmental Planning and Assessment Regulation 1994*, as required by Section 80A (11) of the Act.

6. The Applicant will submit a Conditions Compliance Report to the Director-General prior to the commencement of extraction in areas that are not currently subject to extraction. Subsequent reports will be submitted annually for the first three years of extraction in areas not currently subject to extraction. Further reports shall be submitted as required by the Director-General.

   To enable ready comparison with the EIS's predictions, diagrams and tables, the Conditions Compliance Reports shall include, but not be limited to, the following matters:
   (a) a compliance audit of the performance of the project against conditions of Consent and statutory approvals;
   (b) a review of the effectiveness of the environmental management of the development;
   (c) the results of environmental monitoring required under this Consent or other approvals, including interpretations and discussion by a suitably qualified person;
   (d) a listing of any variations obtained to approvals applicable to the DA since the last report;
   (e) a record of all complaints and the actions taken to mitigate all such complaints;
   (f) a report detailing the rehabilitation measures undertaken since the last report; and
   (g) environmental management targets and strategies for stages of the development yet to be completed.

7. The Director-General may, after considering a Conditions Compliance Report, notify the Applicant of any reasonable requirements for compliance with this Consent. The Applicant shall comply with those requirements within such time as the Director-General may direct.

> *Note: The Applicant is obliged to ensure that all statutory requirements, including all relevant legislation, Regulations, Australian Standards, Codes, Guidelines and Notices, Conditions and Directions of the Councils and relevant government agencies are met and approvals obtained.*

Commencement and duration

8. No extraction shall commence in areas that are not currently subject to extraction, until the Applicant has:
   (a) constructed the perimeter bund wall;
   (b) submitted the Conditions Compliance Report required under Condition 6; and
   (c) obtained all licences necessary for the commencement of extraction.

9. The duration of extraction under this Consent is for a maximum period of 15 years. The Applicant shall ensure that rehabilitation of all disturbed areas is completed within six months of completion of extraction.

Complaints Procedures

10. Prior to commencement of construction, the Applicant shall:
    (a) publicise a telephone number on which complaints about the subject development can be registered during the hours of operation in Condition 16; and
    (b) publicise a postal address where written complaints may be lodged.
    The telephone number and postal address shall be displayed on the property where it can be read from a public road, for the duration of the development.

11. The Applicant shall record details of all complaints received and actions taken in response to complaints in an up-to-date log book. The log book shall be made available for inspection upon request by the Director-General, the EPA or the Council; and a summary of complaints received shall be included in the Conditions Compliance Reports under Condition 6.

12. The Applicant shall ensure that an initial response to complaints is provided to the complainant within 24 hours of receipt. The Applicant shall then:
    (a) investigate the concerns raised by the complainant and undertake all reasonable attempts to determine the cause of concern; and
    (b) if adverse impacts are identified, undertake all practicable measures to modify the activity which may be causing the impacts.

13. If the Applicant's response does not address the complaint to the satisfaction of the complainant within six weeks, the Applicant shall inform the Director-General and take any action as directed by the Director-General. This may include a requirement to carry out independent investigations of noise and/or dust at the cost of the Applicant, in accordance with Condition 14.

14. If the Director-General is satisfied that an independent investigation is required, the Applicant shall:
    (a) appoint a qualified independent person or team to plan and implement an investigation to qualify the impact and determine the sources of the impact; and
    (b) bear the cost of the independent investigation and make available plans, programs and other information necessary for the independent person to form an appreciation of the past, present and future works and their effects on dust and/or noise emissions.

This investigation is to be carried out in accordance with a documented Plan. The Plan shall be designed and implemented to measure and/or compute (with appropriate calibration by measurement) the relevant noise and/or dust levels at the complainant's property, that are emitted by the development; and specify a monitoring period and reporting schedule.

The independent person or team, the Plan and the timing of its implementation, shall be approved by the Director-General. The independent person or team shall report to the Director-General and the Applicant.

Further independent investigations shall cease if the Director-General is satisfied that the relevant levels are not being exceeded and are unlikely to be exceeded in the future.

Dispute Resolution

15. In the event that the Applicant, Council, the PCA, or a government authority other than the Department, cannot agree on the specification or requirements applicable under this Consent, the matter shall be referred by either party to the Director-General or, if not resolved, to the Minister, whose determination of the disagreement shall be final and binding on the parties.

HOURS OF OPERATION

16. Unless prior written approval of the EPA is obtained, the hours of operation are:
    - construction: 7.00am to 6.00pm Monday to Friday
    - extraction and processing of material: 7.00am to 6.00pm, Monday to Friday and 7.00am to 1.00pm on Saturdays
    - vehicle loading: 6.00am to 6.00pm, Monday to Friday and 6.00am to 1.00pm on Saturdays.

    No works shall be undertaken on Sundays or Public Holidays.

    These restrictions do not apply to routine maintenance work, such as the repair of machinery, provided the work does not result in exceedance of the noise limits in Condition 47.

DEPTH OF EXTRACTION

17. Baulkham Hills Shire Council Development Control Plan for Extractive Industries (DCP 500) requires that the depth of extraction incorporate a 2m freeboard above the wet weather high groundwater level. To meet the objectives of this policy, the Applicant shall ensure that the depth of extraction is consistent with the depth as shown in the extraction plan in the EIS and follow the procedures in Condition 40 if groundwater is encountered during extraction.

ENVIRONMENTAL MANAGEMENT PLAN

18. The Applicant shall prepare a Construction Environmental Management Plan (EMP) to the satisfaction of the Director-General prior to commencement of construction. The Construction EMP shall contain appropriate measures which demonstrate how the environmental objectives for the project will be achieved, including objectives stated in this Consent; and contain a monitoring, reporting and response program.

19. The Applicant shall prepare an Operational Environmental Management Plan (EMP) in consultation with the relevant authorities and to the satisfaction of the Director-General, prior to the commencement of extraction under this Consent. The EMP shall incorporate and integrate environmental management for the existing extraction areas, as well as the areas approved under this Consent.

20. The Operational EMP shall include, but not be limited to:
    (a) environmental objectives for the site;
    (b) the Air Quality Management Plan (Condition 29);

(c) the Soil and Water Management Plan (Condition 38);
(d) the Noise Management Plan (Condition 46);
(e) the Road Noise Management Plan (Condition 48);
(f) the Flora and Fauna Management Plan (Condition 55); and
(g) the Rehabilitation Plan (Condition 58).

21. The Applicant shall make copies of both EMPs available to Council, EPA and DLWC within 14 days of approval by the Director-General. The Applicant shall also make a current copy of the EMPs available for inspection by the public or these agencies, for the duration of the Consent.

22. The Applicant shall, in consultation with the Director-General, the EPA and the DLWC, update the Operational EMP from time to time in order to ensure continuing compliance with the Conditions of this Consent and all relevant approvals and licenses. The EMR shall be responsible for determining if any significant changes to the Operational EMP should be referred to the Director-General for approval.

Environmental Management Representative

23. The Applicant shall be ultimately responsible for ensuring that all environmental safeguards proposed for the development, and as required by this Consent and other statutory approvals, are monitored and complied with. The Applicant shall nominate a management representative who has the authority to stop work if an adverse impact on the environment has occurred or is likely to occur. The Director-General shall approve the management representative.

    The management representative shall:
    (a) oversee the receipt of, and response to, complaints about the environmental performance of the development; and
    (b) liaise with the community in relation to matters of concern associated with the environmental impact of the development – this may involve public meetings from time to time.

24. The Applicant shall, for the duration of this Consent, engage suitably qualified environmental consultant(s) to assist the management representative in the environmental management of the project.

    The environmental consultant(s) shall, in addition to assisting with the matters listed in Condition 23:
    (a) be responsible for the preparation or certification of all environmental management plans;
    (b) be responsible for considering and advising the Applicant on matters specified in the Conditions of this Consent and compliance with such matters;
    (c) facilitate an induction and training program for all persons involved with construction, extraction and rehabilitation activities; and
    (d) be present on-site during any critical construction or operation activities as defined in the EMPs.

INDEPENDENT ENVIRONMENTAL AUDIT

25. Every three (3) years from the date of this Consent, at the completion of works under this Consent, and at any additional time(s) as the Director-General may direct, the Applicant will arrange for an Independent Environmental Audit of the development. The audit will be conducted pursuant to ISO 14010 – Guidelines and General Principles for Environmental Auditing and ISO 14011 – Procedures for Environmental Auditing (or the current versions) and any specifications of the Director-General. The Applicant shall submit 4 copies of the report to the Director-General, who shall provide a copy to the EPA, DLWC and Council.

    The audit will :
    (a) assess compliance with the requirements of this Consent, licence and approvals;
    (b) review the effectiveness of the environmental management of the development, including any mitigation works;

(c) be carried out at the Applicant's expense; and
(d) be conducted by a duly qualified independent person or team approved by the Director-General.

26. The Director-General may, after considering an audit report and any submissions made by the EPA, DLWC and Council on the report, notify the Applicant of any reasonable requirements for compliance with this Consent. The Applicant shall comply with those requirements within such time as the Director-General may direct.

WASTE

27. The Applicant must not cause, permit or allow any waste generated outside the premises to be received at the premises for storage, treatment, processing, reprocessing or disposal, or any waste generated at the premises to be disposed of at the premises, except as expressly permitted by a licence under the *Protection of the Environment Operations Act 1997*. This condition only applies to the storage, treatment, processing, reprocessing or disposal of waste at the premises if it requires an environment protection licence under the *Protection of the Environment Operations Act 1997*.[1]

AIR QUALITY

Air Quality Criteria

28. The Applicant shall take all practical steps to manage the development so that the ambient air quality goals for total suspended particles (TSP) of 90ug/m3 (annual average) and the dust deposition goal of 4gm/m2 (annual average) are not exceeded as a result of the development, when measured at any monitoring location specified in the Air Quality Management Plan.

Air Quality Management

29. The Applicant shall prepare and implement an Air Quality Management Plan as part of the EMP. The Air Quality Management Plan shall:
    (a) identify existing and potential sources of dust deposition, TSP and fine particulates (PM10 and PM2.5) and specify appropriate monitoring intervals and locations. The purpose of the monitoring is to evaluate, assess and report on these emissions and the ambient impacts with the objective of understanding the development's contribution to levels of dust deposition, TSP and fine particulates in ambient air around the site;
    (b) provide a monitoring plan having regard to local meteorology and the relevant Australian Standards, identifying the methodologies to be used, including justification for monitoring intervals, weather conditions, seasonal variations, selecting locations, periods and times of measurements;
    (c) provide details of dust suppression measures for all sources of dust from the development, including a planting and watering regime to ensure that no more than 3 hectares of the site are exposed and active at any one time. The use of a polymer in the water to minimise dust impacts shall be investigated as part of this Plan;
    (d) provide details of actions to ameliorate impacts if they exceed the relevant criteria; and
    (e) provide the design of the reactive management system intended to reduce the day-to-day impacts of dust and fine particulates due to the development.

30. Activities occurring at the premises must be carried out in a manner that will minimise emissions of dust from the premises.[2]

31. The Applicant shall cease offending work at such times when the operations are resulting in visible dust emissions blowing in a direction so as to cross onto public roads or lands not owned by the Applicant.

[1] Environment Protection Authority General Term of Approval
[2] Environment Protection Authority General Term of Approval

32. The Applicant shall install, operate and maintain a sprinkler system to adequately water all cleared areas and stockpiles so as to minimise dust emissions to acceptable levels.

33. The Applicant shall ensure that all vehicular movements on unsealed areas are restricted to specific routes and that all vehicles within the subject site keep to a speed limit of 30 km/h.

34. The Applicant shall ensure that trucks are covered when entering and leaving the premises carrying loads of potentially dust generating material.

Air Quality Monitoring

35. All monitoring equipment is to be installed and operational prior to commencement of construction.

36. Operation of dust deposition gauges and monitoring must be carried out in accordance with;
    (a) Australian Standard 3580.10. 01 (1991) Particulates – Deposited Matter – Gravimetric Method. Approved method AM-19 referred to in *Approved Methods for the Sampling and Analysis of Air Pollutants in New South Wales*, December 1999.
    (b) Australian Standard 2724.3 (1984) Particulate Matter – Determination of Total Suspended Particulates (TSP) - High Volume Sampler Gravimetric Method. Approved method AM 15 referred to in Approved Methods for the sampling and Analysis of Air Pollutants in New South Wales, December 1999.
    (c) Australian Standard 3580.9.6 (1990) for Suspended Particulate Matter – PM10 High Volume Sampler with Size Selective Inlet-Gravimetric Method. Approved method AM-18 referred to in *Approved Methods for the Sampling and Analysis of Air Pollutants in New South Wales*, December 1999[3]

37. A meteorological station measuring wind speed and direction must be installed and operated by the Applicant at a site determined in consultation with the EPA.[4]

WATER QUALITY

Soil and Water Management Plan

38. The Applicant shall prepare and implement a Soil and Water Management Plan as part of the EMP. This plan shall be updated on an annual basis, to the satisfaction of DLWC and in consultation with DLWC. This Plan shall have particular regard to the most recent editions of the Department of Housing's publications *Managing Urban Stormwater: Soils and Construction (1998),* and the requirements of Council's Development Control Plan 500 – Extractive Industries.

    The Soil and Water Management Plan shall contain, but not be limited to:
    (a) management of the impacts of all phases of the development on the quality and quantity of surface and groundwater, including water in storage, sedimentation dams and flooding impacts;
    (b) details of measures to be employed to minimise soil erosion and the discharge of sediment to land and/or waters;
    (c) management of the impacts of the development on nearby creeks and waterbodies, in particular, the Hawkesbury River;
    (d) a strategy for the decommissioning of water management structures, including storage, sedimentation and leachate dams once extraction is complete;
    (e) identification of all potential sources of water pollution and a detailed description of the remedial action to be taken or management systems to be implemented to minimise emissions of these pollutants from all sources within the subject site;

[3] Environment Protection Authority General Term of Approval
[4] Environment Protection Authority General Term of Approval

(f) description of monitoring methodologies and standards that will be adhered to;
(g) identification of the locations where monitoring will be carried out;
(h) detailed description of the monitoring cycle and the duration of each monitoring cycle;
(i) details of actions to ameliorate impacts if they exceed the relevant criteria;
(j) detail any exceedances and the mitigative actions used; and
(k) emergency contingency plans for implementation in the event that the groundwater is encountered during excavation (see Condition 40).

Water Monitoring

39. Groundwater monitoring shall be undertaken on a regularly scheduled basis to provide data suitable for the determination of the wet weather high groundwater level, to the satisfaction of DLWC. A network of monitoring bores shall be installed at appropriate locations across the site to accommodate these objectives.[5]

Groundwater Management

40. The Applicant shall immediately notify DLWC in the event of groundwater being encountered during excavation. The location and elevation of such intersections is to be reported to allow determination by DLWC whether the water table occurs within a perched aquifer or if it is at a regional level. In the event of breaching of the groundwater table, operations are to cease and DLWC consulted immediately to determine the basis upon which extraction may recommence.[6] If no response is received from DLWC within 24 hours, the Applicant shall implement the emergency contingency plans as described in the Soil and Water Management Plan (Condition 38). The Applicant shall advise the Director-General of the results of any such incidents under this Condition.

41. Site works and excavations are to be backfilled or infilled only with earth and rock materials sourced as a result of extraction operations in the Maroota area.[7] This condition does not apply to the construction of the perimeter bund wall.

Licensable Groundwater Works

42. All groundwater investigation/monitoring and groundwater supply works are required to be licensed with the DLWC under the provisions of the *Water Act 1912*. A licence under Part 5 of the *Water Act 1912* is required to authorise a water supply bore (10BL157594) for industrial (Sand Washing) purposes and stock.

Surface Water Management

43. The applicant shall not allow any tailwater drainage to discharge into or onto:
    - any adjoining public or Crown road;
    - any other persons land;
    - any Crown land;
    - any river, creek or watercourse;
    - any groundwater aquifer;
    - any native vegetation as described under the *Native Vegetation Conservation Act 1997;*
    - any wetlands of environmental significance.[8]

44. Surface stormwater runoff from the disturbed areas on the site must be directed to the sedimentation dam(s).[9]

[5] Department of Land and Water Conservation General Term of Approval
[6] Department of Land and Water Conservation General Term of Approval
[7] Department of Land and Water Conservation General Term of Approval
[8] Department of Land and Water Conservation General Term of Approval

Dam Licensing

45. A license will be required for any new dams under Part 2 of the *Water Act 1912*. The Applicant shall submit design plans/ survey of the structures as required by DLWC.[10]

NOISE

Noise Management Plan

46. The Applicant shall prepare and implement a Noise Management Plan as part of the EMP.

The Noise Management Plan shall:

(a) identify existing and potential noise sources and their relative contribution to noise impacts from the development;

(b) specify appropriate intervals for noise monitoring to evaluate, assess and report noise emission levels due to construction and normal operations of the development under prevailing weather conditions;

(c) outline the methodologies to be used, including justification for monitoring intervals, weather conditions, seasonal variations, selecting locations, periods and times of measurements, the design of any noise modelling or other studies, including the means for determining the noise levels emitted by the development;

(d) specify measures to be taken to document any higher level of impacts or patterns of temperature inversions, and detail actions to quantify and ameliorate enhanced impacts if they occur;

(e) provide details of noise amelioration measures, including measures to be used to reduce the impact of intermittent, low frequency and tonal noise (including truck reversing alarms) and reactive management responses for particular noise sources; and

(f) contingency measures to be implemented should noise complaints be received.

Operational Noise Limits

47. Noise from the premises must not exceed:

- an $L_{A10\,(15\,minute)}$ noise emission criterion of 45 dB(A) (7am to 6pm) Monday to Saturday.
- an $L_{A10(15minute)}$ noise emission criterion of 40 dB(A) (6am and 7am) Monday to Saturday.
- an $L_{A1minute}$ noise emission criterion of 50 dB(A) (6am and 7am) Monday to Saturday

Noise from the premises is to be measured at any affected receptor to determine compliance with this Condition.

Note: Noise measurement

For the purpose of noise measures required for this Condition, the L_{A10} noise level must be measured or computed at any point as specified below over a period of 15 minutes using "FAST" response on the sound level meter.

For the purpose of the noise criteria for this condition, 5dBA must be added to the measured level if the noise is substantially tonal or impulsive in character. The location or point of impact can be different for each development, for example, at the closest residential receiver or at the closest boundary of the development. Measurement locations can be:

- 1 metre from the facade of the residence for night time assessment;
- at the residential boundary;

[9] Environment Protection Authority General Term of Approval

[10] Department of Land and Water Conservation General Term of Approval

- 30 metres from the residence (rural situations) where boundary is more than 30 metres from residence.

The noise emission limits identified in this condition apply for prevailing meteorological conditions (winds up to 3m/s), except under conditions of temperature inversions. Noise impacts that may be enhanced by temperature inversions must be addressed by:

- documenting noise complaints received to identify any higher level of impacts or patterns of temperature inversions;
- where levels of noise complaints indicate a higher level of impact then actions to quantify and ameliorate any enhanced impacts under temperature inversions conditions should be developed and implemented.[11]

TRAFFIC AND TRANSPORT

Road Noise Management Plan

48. The Applicant shall ensure that traffic noise from the development does not exceed (L Aeq(1 hr)) 55 dB(A) between 7 am and 10 pm and 50 dB(A) between 10 pm and 7 am at any affected residence under adverse weather conditions. Where ambient Leq levels already exceed these criteria, the Applicant shall ensure that traffic noise from the development does not result in an increase of more than 2 dB(A).

Note: Adverse weather conditions means in the presence of winds up to 3 metres per second and/or temperature inversions of up to 4 degrees Centigrade per 100 metres.

49. The Applicant shall prepare a Road Noise Management Plan as part of the EMP. The Plan shall document measures to be taken to meet the criteria, including a monitoring, reporting and response program; and methods for educating drivers in the reduction of road noise impacts.

Truck movements

50. The Applicant shall ensure that truck movements associated with the development do not exceed 100 movements per day (50 laden truck movements) or 20 (10 laden truck movements) movements per hour, during construction or operation.

Section 94A Contributions

51. The Applicant shall pay to Council a contribution under Section 94A of the Act at the rate of $0.65 per tonne of all extracted/ processed material transported from the subject site.

    The following conditions apply to the payment of this contribution:

    (A) The contribution will be calculated and paid monthly from the date of this Consent;
    (b) The contribution will be indexed and adjusted annually as from the date of Consent, in accordance with the Consumer Price Index. This adjustment will be applicable to each financial year for the duration of this Consent and shall take effect from and including July each year, commencing 1 July 2000;
    (c) On or before the fourteenth day of each month for the duration of the Consent, the Applicant shall deliver to Council weighbridge records showing the true quantities of extracted/processed material transported from the property during the immediately proceeding month and the Council will then, as soon as it can conveniently do so, issue an invoice to the Applicant, to be paid within fourteen days;
    (d) The Council has the right to inspect and have the original records relating to any extraction/processing material, including numbers and types of laden trucks, trailers and load

[11] Environment Protection Authority General Term of Approval

quantities transported from the property audited, at any time when Council makes a written request to do so;

(e) The Council will pay all the said contribution payments into a specially identified account for payment towards the rehabilitation, restoration, repair and/or maintenance of Old Northern and Wisemans Ferry Roads within the Baulkham Hills Shire boundary.

Note: This condition has been imposed in accordance with Council's Contributions Plan No. 6 – Extractive Industries. A copy of this plan may be inspected at the Customer Service Centre, Council's Administration Complex, corner of Carrington and Showground Roads, Castle Hill, between the hours of 8:30 am and 4:30 pm weekdays.

FLORA AND FAUNA

52. The Applicant shall conserve the six *Acacia bynoeana* plants in the following manner:
    (a) a conservation area is to be established, containing the six plants and incorporating a 30 metre buffer;
    (b) the boundary of the conservation area shall be surveyed and marked by a suitably qualified surveyor, with the assistance of a botanist/ecologist;
    (c) the surveyed boundary shall be fenced to prevent vehicles entering the area;
    (d) no clearing, construction or extraction shall occur within 30 metres of any plant identified in the EIS until steps (a) to (c) have occurred.

53. The Applicant shall not clear the strip of remnant vegetation along the southern fence line (Old Northern Road) and the vegetation to the north of the site entrance (Roberts Road) containing Blue Mountains Mahogany (*Eucalyptus notabilis*). This area shall be fenced off to prevent vehicles entering the area.

54. In constructing the perimeter bund wall, the Applicant shall minimise disturbance to existing native vegetation.

Flora and Fauna Management Plan

55. The Applicant shall prepare a Flora and Fauna Management Plan as part of the EMP. The Plan shall be prepared in consultation with National Parks and Wildlife Service and Council, and shall:
    (a) describe the characteristics and location of species, populations and communities that the proposal may impact upon;
    (b) consider the feasibility and practicality of salvaging trees removed for the development for relocation to conserved or rehabilitated areas, for the purposes of reconstructing habitat for ground fauna
    (c) contain a program for the active management and maintenance of all conserved and rehabilitated vegetation (as detailed in the EIS and required under this Consent) including consideration of:
        - post-extraction land use objectives for the site;
        - utilisation of local endemic species or species naturally occurring in the Maroota area;
        - planting around the *Acacia bynoeana* conservation area to further buffer this species and enhance its long term viability as a bushland ecosystem;
        - connection of existing areas and future areas of revegetation to form a network of wildlife corridors throughout site and to adjoining lands to facilitate species recruitment through natural immigration;
        - provision of rocks of varying sizes to provide refuge and basking sites for herpetofauna;
        - fencing of revegetated areas to prohibit grazing by stock; and
        - provision of artificial nest boxes for a range of arboreal fauna.
    (d) mitigation measures to be implemented should operations compromise the significant flora and fauna communities identified in the EIS; and

(e) an ongoing monitoring program of the existing and proposed revegetated areas to assess their floristical structure and diversity, resilience and robustness to disturbance, and fauna species diversity. The information obtained from the monitoring shall be used to guide future revegetation and management efforts.

56. The Applicant shall maintain the revegetated areas for the duration of the Consent. Maintenance may include:
    - replanting failed or unsatisfactory areas
    - repairing erosion problems
    - fire management – fire suppression or fire encouragement
    - pest and weed control
    - control of feral animal populations
    - maintain and repair fencing
    - fertiliser application
    - watering plants in drier areas, especially in the establishment phase
    - application of lime or gypsum to control pH and improve soil structure.

HERITAGE

57. If, during the development, the Applicant becomes aware of any heritage or archaeological material, all work likely to affect the material shall cease immediately and the relevant authorities consulted about an appropriate course of action prior to recommencement of work. The relevant authorities may include NPWS, the Heritage Office, and the Local Aboriginal Land Councils. Any necessary permits or consents shall be obtained and complied with prior to recommencement of work.

REHABILITATION PLAN

58. The Applicant shall prepare a Plan for the staged rehabilitation of the site as part of the EMP. The Rehabilitation Plan shall:
    (a) outline procedures for the implementation of rehabilitation measures within an acceptable timeframe;
    (b) document the source of material for rehabilitation and methods to ensure that no contaminated or otherwise unsuitable material is brought onto the site; and
    (c) detail the preferred option for the final landform and the implementation of this landform.

ENVIRONMENTAL PLANNING AND ASSESSMENT ACT 1979

NOTICE OF MODIFICATION TO A DEVELOPMENT CONSENT PURSUANT TO SECTION 96 (2) OF THE ENVIRONMENTAL PLANNING AND ASSESSMENT ACT 1979

I, the Minister for Urban Affairs and Planning, under Section 96(2) of the amended Environmental Planning and Assessment Act, 1979, modify the development consent referred to in Schedule 1 in the manner set out in Schedule 2. I am satisfied that the development to which the development consent, as modified, will relate, is substantially the same development.

Andrew Refshauge MP
Minister for Urban Affairs and Planning,

Sydney, 2000 File No: S00/00772

SCHEDULE 1

Development consent granted by the Minister for Urban Affairs and Planning on 31 May 2000 to a development application made by Dr. L.S. Martin for extraction and on-site processing of sand, clay and pebble, and construction of a bund wall, on Lots 1 and 2 DP 228308, Lot 2 DP312327, Roberts Road, Maroota.

SCHEDULE 2

The development consent is modified as follows:

Abbreviations and Interpretation

Delete the word "perimeter" from the definition of "construction".

General

Condition 2(c)

Insert after "the two faxes from Dick Benbow and Associates Pty Ltd dated 17 February 2000 and attachments" the following:

"except as modified by the report of Dick Benbow and Associates (Report No 10065 Issue 1) dated 26 June 2000."

Commencement and Duration

Condition 8 (a)

Delete all the words in Condition 8(a) and insert instead:

"constructed the bund walls at the corner of Roberts Road and Old Northern Road;"

Groundwater Management

Condition 41

Delete the sentence "This condition does not apply to the construction of the perimeter bund wall."

NOISE

Noise Management Plan

Condition 46

Insert after subclause (f) the following:

"(g) Provision for the notification of adjoining property owners of the commencement and duration of works adjoining the boundary.
(h) Construction of temporary noise shielding to residences affected by short-term noise impacts."

Operational Noise Limits

Condition 47

Insert after Condition 47 the following new conditions:

"47(a) The excavator to be used is to be fitted with acoustic mufflers to achieve a noise level of approximately 76dB(A) when measured at 7 metres.

47(b) The on-site generator is to be fitted with an acoustic enclosure to ensure that noise levels less than 44dB(A) at 30m are achieved.

47(c) A noise compliance investigation is to undertaken within one month of the installation of the equipment to demonstrate compliance with the noise level limits stated in Conditions 47(a) and 47(b). The results of the compliance investigation are to be provided for the approval of the Director-General within 14 days of the completion of the investigations."

FLORA AND FAUNA

Condition 54

Delete all the words in Condition 54 and insert instead:

"In construction of the bund walls at the corner of Roberts Road and Old Northern Road, the Applicant shall minimise disturbance to existing native vegetation."

REHABILITATION PLAN

Condition 58

Delete the word "and" at the end of the sentence in subclause (b) and insert after subclause (c) the following:

"(d) detail proposals for the integration of the visual bund walls into the final landform of the site.

(d) Provide evidence of consultation with Council in the design of the final landform for the site."

Appendix C: EPA Licence

Environment Protection Licence

Licence - 6535

Licence Details	
Number:	6535
Anniversary Date:	12-March

Licensee
HB MAROOTA PTY LTD
PO BOX 1778
GOSFORD NSW 2250

Premises
HB MAROOTA PTY LTD
CNR ROBERTS & OLD NORTHERN ROADS
MAROOTA NSW 2756

Scheduled Activity
Crushing, Grinding or Separating
Extractive Activities

Fee Based Activity	Scale
Crushing, grinding or separating	> 30000-100000 T processed
Land-based extractive activity	> 50000-100000 T extracted, processed or stored

Region
Metropolitan - Sydney Industry
Level 13, 10 Valentine Ave PARRAMATTA NSW 2150
Phone: (02) 9995 5000
Fax: (02) 9995 6900
PO Box 668 PARRAMATTA
NSW 2124

Environment Protection Licence

Licence - 6535

INFORMATION ABOUT THIS LICENCE ---------- 3

Dictionary ---------- 3

Responsibilities of licensee ---------- 3

Variation of licence conditions ---------- 3

Duration of licence ---------- 3

Licence review ---------- 3

Fees and annual return to be sent to the EPA ---------- 3

Transfer of licence ---------- 4

Public register and access to monitoring data ---------- 4

1 ADMINISTRATIVE CONDITIONS ---------- 5

A1 What the licence authorises and regulates ---------- 5

A2 Premises or plant to which this licence applies ---------- 5

A3 Other activities ---------- 6

A4 Information supplied to the EPA ---------- 6

2 LIMIT CONDITIONS ---------- 6

L1 Pollution of waters ---------- 6

L2 Noise limits ---------- 7

3 OPERATING CONDITIONS ---------- 7

O1 Activities must be carried out in a competent manner ---------- 7

O2 Maintenance of plant and equipment ---------- 7

O3 Dust ---------- 7

O4 Other operating conditions ---------- 7

4 MONITORING AND RECORDING CONDITIONS ---------- 8

M1 Monitoring records ---------- 8

M2 Recording of pollution complaints ---------- 8

M3 Telephone complaints line ---------- 8

5 REPORTING CONDITIONS ---------- 9

R1 Annual return documents ---------- 9

R2 Notification of environmental harm ---------- 9

R3 Written report ---------- 10

6 GENERAL CONDITIONS ---------- 10

G1 Copy of licence kept at the premises or plant ---------- 10

DICTIONARY ---------- 12

General Dictionary ---------- 12

Information about this licence

Dictionary

A definition of terms used in the licence can be found in the dictionary at the end of this licence.

Responsibilities of licensee

Separate to the requirements of this licence, general obligations of licensees are set out in the Protection of the Environment Operations Act 1997 ("the Act") and the Regulations made under the Act. These include obligations to:

- ensure persons associated with you comply with this licence, as set out in section 64 of the Act;
- control the pollution of waters and the pollution of air (see for example sections 120 - 132 of the Act);
- report incidents causing or threatening material environmental harm to the environment, as set out in Part 5.7 of the Act.

Variation of licence conditions

The licence holder can apply to vary the conditions of this licence. An application form for this purpose is available from the EPA.

The EPA may also vary the conditions of the licence at any time by written notice without an application being made.

Where a licence has been granted in relation to development which was assessed under the Environmental Planning and Assessment Act 1979 in accordance with the procedures applying to integrated development, the EPA may not impose conditions which are inconsistent with the development consent conditions until the licence is first reviewed under Part 3.6 of the Act.

Duration of licence

This licence will remain in force until the licence is surrendered by the licence holder or until it is suspended or revoked by the EPA or the Minister. A licence may only be surrendered with the written approval of the EPA.

Licence review

The Act requires that the EPA review your licence at least every 5 years after the issue of the licence, as set out in Part 3.6 and Schedule 5 of the Act. You will receive advance notice of the licence review.

Fees and annual return to be sent to the EPA

For each licence fee period you must pay:

- an administrative fee; and
- a load-based fee (if applicable).

The EPA publication “A Guide to Licensing” contains information about how to calculate your licence fees. The licence requires that an Annual Return, comprising a Statement of Compliance and a summary of any monitoring required by the licence (including the recording of complaints), be submitted to the EPA. The Annual Return must be submitted within 60 days after the end of each reporting period. See condition R1 regarding the Annual Return reporting requirements.

Usually the licence fee period is the same as the reporting period.

Transfer of licence

The licence holder can apply to transfer the licence to another person. An application form for this purpose is available from the EPA.

Public register and access to monitoring data

Part 9.5 of the Act requires the EPA to keep a public register of details and decisions of the EPA in relation to, for example:

- licence applications;
- licence conditions and variations;
- statements of compliance;
- load based licensing information; and
- load reduction agreements.

Under s320 of the Act application can be made to the EPA for access to monitoring data which has been submitted to the EPA by licensees.

This licence is issued to:

HB MAROOTA PTY LTD
PO BOX 1778
GOSFORD NSW 2250

subject to the conditions which follow.

1 Administrative Conditions

A1 What the licence authorises and regulates

A1.1 This licence authorises the carrying out of the scheduled activities listed below at the premises specified in A2. The activities are listed according to their scheduled activity classification, fee-based activity classification and the scale of the operation.

Unless otherwise further restricted by a condition of this licence, the scale at which the activity is carried out must not exceed the maximum scale specified in this condition.

Scheduled Activity	Fee Based Activity	Scale
Crushing, Grinding or Separating	Crushing, grinding or separating	> 30000 - 100000 T processed
Extractive Activities	Land-based extractive activity	> 50000 - 100000 T extracted, processed or stored

A2 Premises or plant to which this licence applies

A2.1 The licence applies to the following premises:

Premises Details
HB MAROOTA PTY LTD
CNR ROBERTS & OLD NORTHERN ROADS
MAROOTA
NSW 2756
LOT 1 DP 228308, LOT 2 DP 228308, LOT 2 DP 312327

A2.2 The premises location is shown on the map below.

A3 Other activities

A3.1 This licence applies to all other activities carried on at the premises, including:

Ancillary Activity
Agricultural Produce Industries
Aircraft (helicopter) facilities

A4 Information supplied to the EPA

A4.1 Works and activities must be carried out in accordance with the proposal contained in the licence application, except as expressly provided by a condition of this licence.

In this condition the reference to "the licence application" includes a reference to:
a) the applications for any licences (including former pollution control approvals) which this licence replaces under the Protection of the Environment Operations (Savings and Transitional) Regulation 1998; and
b) the licence information form provided by the licensee to the EPA to assist the EPA in connection with the issuing of this licence.

2 Limit Conditions

L1 Pollution of waters

L1.1 Except as may be expressly provided in any other condition of this licence, the licensee must comply with section 120 of the Protection of the Environment Operations Act 1997.

L2 Noise limits

L2.1 Noise from the premises must not exceed the sound pressure level expressed as LA10 (15 minute) of 45 dB(A), except as expressly provided by this licence.

L2.2 Noise from the premises is to be measured or computed at any point within one metre of any residential boundary, or at any point within 30 metres of the dwelling where the dwelling is more than 30 metres from the boundary, to determine compliance with the noise level limits in Condition L2.1.

3 Operating Conditions

O1 Activities must be carried out in a competent manner

O1.1 Licensed activities must be carried out in a competent manner.
This includes:
a) the processing, handling, movement and storage of materials and substances used to carry out the activity; and
b) the treatment, storage, processing, reprocessing, transport and disposal of waste generated by the activity.

O2 Maintenance of plant and equipment

O2.1 All plant and equipment installed at the premises or used in connection with the licensed activity:
a) must be maintained in a proper and efficient condition; and
b) must be operated in a proper and efficient manner.

O3 Dust

O3.1 The premises must be maintained in a condition which minimises or prevents the emission of dust from the premises.

O3.2 All loaded trucks entering or leaving the premises must have their loads covered.

O4 Other operating conditions

O4.1 The licensee must prevent any tracking of mud on to public roads by vehicles leaving the premises.

4 Monitoring and Recording Conditions

M1 Monitoring records

M1.1 The results of any monitoring required to be conducted by this licence or a load calculation protocol must be recorded and retained as set out in this condition.

M1.2 All records required to be kept by this licence must be:
a) in a legible form, or in a form that can readily be reduced to a legible form;
b) kept for at least 4 years after the monitoring or event to which they relate took place; and
c) produced in a legible form to any authorised officer of the EPA who asks to see them.

M1.3 The following records must be kept in respect of any samples required to be collected for the purposes of this licence:
a) the date(s) on which the sample was taken;
b) the time(s) at which the sample was collected;
c) the point at which the sample was taken; and
d) the name of the person who collected the sample.

M2 Recording of pollution complaints

M2.1 The licensee must keep a legible record of all complaints made to the licensee or any employee or agent of the licensee in relation to pollution arising from any activity to which this licence applies.

M2.2 The record must include details of the following:
a) the date and time of the complaint;
b) the method by which the complaint was made;
c) any personal details of the complainant which were provided by the complainant or, if no such details were provided, a note to that effect;
d) the nature of the complaint;
e) the action taken by the licensee in relation to the complaint, including any follow-up contact with the complainant; and
f) if no action was taken by the licensee, the reasons why no action was taken.

M2.3 The record of a complaint must be kept for at least 4 years after the complaint was made.

M2.4 The record must be produced to any authorised officer of the EPA who asks to see them.

M3 Telephone complaints line

M3.1 The licensee must operate during its operating hours a telephone complaints line for the purpose of receiving any complaints from members of the public in relation to activities conducted at the premises or by the vehicle or mobile plant, unless otherwise specified in the licence.

M3.2 The licensee must notify the public of the complaints line telephone number and the fact that it is a complaints line so that the impacted community knows how to make a complaint.

M3.3 The preceding two conditions do not apply until 3 months after: the date of the issue of this licence.

5 Reporting Conditions

R1 Annual return documents

R1.1 The licensee must complete and supply to the EPA an Annual Return in the approved form comprising:
a) a Statement of Compliance; and
b) a Monitoring and Complaints Summary.
At the end of each reporting period, the EPA will provide to the licensee a copy of the form that must be completed and returned to the EPA.

R1.2 An Annual Return must be prepared in respect of each reporting period, except as provided below.

R1.3 Where this licence is transferred from the licensee to a new licensee:
a) the transferring licensee must prepare an Annual Return for the period commencing on the first day of the reporting period and ending on the date the application for the transfer of the licence to the new licensee is granted; and
b) the new licensee must prepare an Annual Return for the period commencing on the date the application for the transfer of the licence is granted and ending on the last day of the reporting period.

R1.4 Where this licence is surrendered by the licensee or revoked by the EPA or Minister, the licensee must prepare an Annual Return in respect of the period commencing on the first day of the reporting period and ending on:
a) in relation to the surrender of a licence - the date when notice in writing of approval of the surrender is given; or
b) in relation to the revocation of the licence - the date from which notice revoking the licence operates.

R1.5 The Annual Return for the reporting period must be supplied to the EPA by registered post not later than 60 days after the end of each reporting period or in the case of a transferring licence not later than 60 days after the date the transfer was granted (the 'due date').

R1.6 The licensee must retain a copy of the Annual Return supplied to the EPA for a period of at least 4 years after the Annual Return was due to be supplied to the EPA.

R1.7 Within the Annual Return, the Statement of Compliance must be certified and the Monitoring and Complaints Summary must be signed by:
a) the licence holder; or
b) by a person approved in writing by the EPA to sign on behalf of the licence holder.

Note: The term "reporting period" is defined in the dictionary at the end of this licence. Do not complete the Annual Return until after the end of the reporting period.

Note: An application to transfer a licence must be made in the approved form for this purpose.

R2 Notification of environmental harm

R2.1 Notifications must be made by telephoning the Environment Line service on 131 555.

R2.2 The licensee must provide written details of the notification to the EPA within 7 days of the date on which the incident occurred.

Note: The licensee or its employees must notify all relevant authorities of incidents causing or threatening material harm to the environment immediately after the person becomes aware of the incident in accordance with the requirements of Part 5.7 of the Act.

R3 Written report

R3.1 Where an authorised officer of the EPA suspects on reasonable grounds that:
a) where this licence applies to premises, an event has occurred at the premises; or
b) where this licence applies to vehicles or mobile plant, an event has occurred in connection with the carrying out of the activities authorised by this licence,
and the event has caused, is causing or is likely to cause material harm to the environment (whether the harm occurs on or off premises to which the licence applies), the authorised officer may request a written report of the event.

R3.2 The licensee must make all reasonable inquiries in relation to the event and supply the report to the EPA within such time as may be specified in the request.

R3.3 The request may require a report which includes any or all of the following information:
a) the cause, time and duration of the event;
b) the type, volume and concentration of every pollutant discharged as a result of the event;
c) the name, address and business hours telephone number of employees or agents of the licensee, or a specified class of them, who witnessed the event;
d) the name, address and business hours telephone number of every other person (of whom the licensee is aware) who witnessed the event, unless the licensee has been unable to obtain that information after making reasonable effort;
e) action taken by the licensee in relation to the event, including any follow-up contact with any complainants;
f) details of any measure taken or proposed to be taken to prevent or mitigate against a recurrence of such an event; and
g) any other relevant matters.

R3.4 The EPA may make a written request for further details in relation to any of the above matters if it is not satisfied with the report provided by the licensee. The licensee must provide such further details to the EPA within the time specified in the request.

6 General Conditions

G1 Copy of licence kept at the premises or plant

G1.1 A copy of this licence must be kept at the premises to which the licence applies.

G1.2 The licence must be produced to any authorised officer of the EPA who asks to see it.

G1.3 The licence must be available for inspection by any employee or agent of the licensee working at the premises.

Environment Protection Licence

Licence - 6535

Dictionary

General Dictionary

3DGM [in relation to a concentration limit]	Means the three day geometric mean, which is calculated by multiplying the results of the analysis of three samples collected on consecutive days and then taking the cubed root of that amount. Where one or more of the samples is zero or below the detection limit for the analysis, then 1 or the detection limit respectively should be used in place of those samples
Act	Means the Protection of the Environment Operations Act 1997
activity	Means a scheduled or non-scheduled activity within the meaning of the Protection of the Environment Operations Act 1997
actual load	Has the same meaning as in the Protection of the Environment Operations (General) Regulation 2009
AM	Together with a number, means an ambient air monitoring method of that number prescribed by the *Approved Methods for the Sampling and Analysis of Air Pollutants in New South Wales*.
AMG	Australian Map Grid
anniversary date	The anniversary date is the anniversary each year of the date of issue of the licence. In the case of a licence continued in force by the Protection of the Environment Operations Act 1997, the date of issue of the licence is the first anniversary of the date of issue or last renewal of the licence following the commencement of the Act.
annual return	Is defined in R1.1
Approved Methods Publication	Has the same meaning as in the Protection of the Environment Operations (General) Regulation 2009
assessable pollutants	Has the same meaning as in the Protection of the Environment Operations (General) Regulation 2009
BOD	Means biochemical oxygen demand
CEM	Together with a number, means a continuous emission monitoring method of that number prescribed by the *Approved Methods for the Sampling and Analysis of Air Pollutants in New South Wales*.
COD	Means chemical oxygen demand
composite sample	Unless otherwise specifically approved in writing by the EPA, a sample consisting of 24 individual samples collected at hourly intervals and each having an equivalent volume.
cond.	Means conductivity
environment	Has the same meaning as in the Protection of the Environment Operations Act 1997
environment protection legislation	Has the same meaning as in the Protection of the Environment Administration Act 1991
EPA	Means Environment Protection Authority of New South Wales.
fee-based activity classification	Means the numbered short descriptions in Schedule 1 of the Protection of the Environment Operations (General) Regulation 2009.
general solid waste (non-putrescible)	Has the same meaning as in Part 3 of Schedule 1 of the Protection of the Environment Operations Act 1997

Environment Protection Licence

Licence - 6535

flow weighted composite sample	Means a sample whose composites are sized in proportion to the flow at each composites time of collection.
general solid waste (putrescible)	Has the same meaning as in Part 3 of Schedule 1 of the Protection of the Environmen t Operations Act 1997
grab sample	Means a single sample taken at a point at a single time
hazardous waste	Has the same meaning as in Part 3 of Schedule 1 of the Protection of the Environment Operations Act 1997
licensee	Means the licence holder describe d at the front of this licence
load calculation protocol	Has the same meaning as in the Protection of the Environment Operations (General) Regulation 2009
local authority	Has the same meaning as in the Protection of the Environment Operations Act 1997
material harm	Has the same meaning as in section 147 Protection of the Environment Operations Act 1997
MBAS	Means methylene blue active substances
Minister	Means the Minister administering the Protection of the Environment Operations Act 1997
mobile plant	Has the same meaning as in Part 3 of Schedule 1 of the Protection of the Environment Operations Act 1997
motor vehicle	Has the same meaning as in the Protection of the Environment Operations Act 1997
O&G	Means oil and grease
percentile [in relation to a concentration limit of a sample]	Means that percentage [eg.50%] of the number of samples taken that must meet the concentration limit specified in the licence for that pollutant over a specified period of time. In this licence, the specified period of time is the Reporting Period unless otherwise stated in this licence.
plant	Includes all plant within the meaning of the Protection of the Environment Operations Act 1997 as well as motor vehicles.
pollution of waters [or water pollution]	Has the same meaning as in the Protection of the Environment Operations Act 1997
premises	Means the premises described in condition A2.1
public authority	Has the same meaning as in the Protection of the Environment Operations Act 1997
regional office	Means the relevant EPA office referred to in the Contacting the EPA document accompanying this licence
reporting period	For the purposes of this licence, the reporting period means the period of 12 months after the issue of the licence, and each subsequent period of 12 mo nths. In the case of a licence continued in force by the Protection of the Environment Operations Act 1997, the date of issue of the licence is the first anniversary of the date of issue or last renewal of the licence following the commencement of the Act.
restricted solid waste	Has the same meaning as in Part 3 of Schedule 1 of the Protection of the Environment Operations Act 1997
scheduled activity	Means an activity listed in Schedule 1 of the Protection of the Environment Operations Act 1997
special waste	Has the same meaning as in Part 3 of Schedule 1 of the Protection of the Environment Operations Act 1997
TM	Together with a number, means a test method of that number prescribed by the *Approved Methods for the Sampling and Analysis of Air Pollutants in New South Wales*.

Environment Protection Licence

Licence - 6535

TSP	Means total suspended particles
TSS	Means total suspended solids
Type 1 substance	Means the elements antimony, arsenic, cadmium, lead or mercury or any compound containing one or more of those elements
Type 2 substance	Means the elements beryllium, chromium, cobalt, manganese, nickel, selenium, tin or vanadium or any compound containing one or more of those elements
utilisation area	Means any area shown as a utilisation area on a map submitted with the application for this licence
waste	Has the same meaning as in the Protection of the Environment Operations Act 1997
waste type	Means liquid, restricted solid waste, general solid waste (putrescible), general solid waste (non - putrescible), special waste or hazardous waste

Mr Nigel Sargent

Environment Protection Authority

(By Delegation)

Date of this edition: 14-June-2000

Environment Protection Licence

Licence - 6535

End Notes

1	Licence varied by change to Common Name field, issued on 15-Oct-2001, which came into effect on 15-Oct-2001.
2	Licence transferred through application 140865, approved on 29-Oct-2001, which came into effect on 24-Sep-2001.
3	Licence varied by notice 1012523, issued on 21-May-2002, which came into effect on 15-Jun-2002.
4	Licence varied by correction to EPA Sub Region data record, issued on 20-Sep-2002, which came into effect on 20-Sep-2002.
5	Licence transferred through application 141899, approved on 23-Apr-2003, which came into effect on 21-Apr-2003.
6	Licence varied by notice 1034428, issued on 13-Dec-2004, which came into effect on 07-Jan-2005.
7	Licence varied by notice 1081877, issued on 10-Mar-2008, which came into effect on 10-Mar-2008.
8	Licence varied by Change to schedule 1, issued on 07-May-2008, which came into effect on 07-May-2008.
9	Condition A1.3 Not applicable varied by notice issued on <issue date> which came into effect on <effective date>
10	Licence varied by notice 1111632, issued on 01-Apr-2010, which came into effect on 01-Apr-2010.
11	Licence varied by notice 1527501 issued on 09-Mar-2015

Appendix D: Blue Book Calculations

1. Erosion Hazard and Sediment Basins

Site Name: **Maroota Sand Quarry**

Site Location: **Maroota Sand Quarry**

Precinct/Stage: **Existing**

Other Details:

Site area	Sub-catchment or Name of Structure						Notes
	1A	1B	1C	1D	1E	total	
Total catchment area (ha)	1.89	5	2.13	5.97	10.84	28	
Disturbed catchment area (ha)	1.89	5	2.13				

Soil analysis (enter sediment type if known, or laboratory particle size data)

Sediment Type (C, F or D) if known:	F	F	F	F	F	F	From Appendix C (if known)
% sand (fraction 0.02 to 2.00 mm)							Enter the percentage of each soil fraction. E.g. enter 10 for 10%
% silt (fraction 0.002 to 0.02 mm)							
% clay (fraction finer than 0.002 mm)							
Dispersion percentage							E.g. enter 10 for dispersion of 10%
% of whole soil dispersible							See Section 6.3.3(e). Auto-calculated
Soil Texture Group	F	F	F	F	F	F	Automatic calculation from above

Rainfall data

Design rainfall depth (no of days)	5	5	5	5	5	5	See Section 6.3.4 and, particularly, Table 6.3 on pages 6-24 and 6-25.
Design rainfall depth (percentile)	95	95	95	95	95	95	
x-day, y-percentile rainfall event (mm)	69.4	69.4	69.4	69.4	69.4	69.4	
Rainfall R-factor (if known)	2290	2290	2290	2290	2290	2290	Only need to enter one or the other here
IFD: 2-year, 6-hour storm (if known)							

RUSLE Factors

Rainfall erosivity (. -factor)	2290	2290	2290	2290	2290	2290	Auto-filled from above
Soil erodibility (. -factor)	0.086	0.086	0.086	0.086	0.086	0.086	RUSLE LS factor calculated for a high rill/interrill ratio.
Slope length (m)	200	210	160	300	300	300	
Slope gradient (%)	0.2	8	5	9	9	9	
Length/gradient (. . -factor)	0.06	3.84	1.77	5.72	5.72	5.72	
Erosion control practice (. -factor)	1.3	1.3	1.3	1.3	1.3	1.3	
Ground cover (. -factor)	1	1	1	1	1	1	

Sediment Basin Design Criteria (for Type D/F basins only. Leave blank for Type C basins)

Storage (soil) zone design (no of months)	2	2	2	2	2	2	Minimum is generally 2 months
Cv (Volumetric runoff coefficient)	0.57	0.57	0.57	0.57	0.57	0.57	See Table F2, page F-4 in Appendix F

Calculations and Type D/F Sediment Basin Volumes

Soil loss (t/ha/yr)	15	984	452	1464	1464	1464	
Soil Loss Class	1	6	4	6	6	6	See Table 4.2, page 4-13
Soil loss (m^3/ha/yr)	12	757	348	1126	1126	1126	Conversion to cubic metres
Sediment basin storage (soil) volume (m^3)	4	631	123				See Sections 6.3.4(i) for calculations
Sediment basin settling (water) volume (m^3)	748	1978	843	2362	4288	11076	See Sections 6.3.4(i) for calculations
Sediment basin total volume (m^3)	752	2609	966				

NB for sizing of Type C (coarse) sediment basins, see Worksheet 3 (if required).

1. Erosion Hazard and Sediment Basins

Site Name: Maroota Sand Quarry

Site Location: Maroota Sand Quarry

Precinct/Stage: Existing

Other Details:

Site area	Sub-catchment or Name of Structure						Notes
	2A	2B	3	4			
Total catchment area (ha)	3.43	1.9	3.73	4.21			
Disturbed catchment area (ha)	3.43	1.9					

Soil analysis (enter sediment type if known, or laboratory particle size data)

Sediment Type (C, F or D) if known:	F	F	F	F	F	F	From Appendix C (if known)
% sand (fraction 0.02 to 2.00 mm)							Enter the percentage of each soil fraction. E.g. enter 10 for 10%
% silt (fraction 0.002 to 0.02 mm)							
% clay (fraction finer than 0.002 mm)							
Dispersion percentage							E.g. enter 10 for dispersion of 10%
% of whole soil dispersible							See Section 6.3.3(e). Auto-calculated
Soil Texture Group	F	F	F	F	F	F	Automatic calculation from above

Rainfall data

Design rainfall depth (no of days)	5	5	5	5			See Section 6.3.4 and, particularly, Table 6.3 on pages 6-24 and 6-25.
Design rainfall depth (percentile)	95	95	95	95			
x-day, y-percentile rainfall event (mm)	69.4	69.4	69.4	69.4			
Rainfall R-factor (if known)	2290	2290	2290	2290			Only need to enter one or the other here
IFD: 2-year, 6-hour storm (if known)							

RUSLE Factors

Rainfall erosivity (. -factor)	2290	2290	2290	2290			Auto-filled from above
Soil erodibility (. -factor)	0.086	0.086	0.086	0.086			RUSLE LS factor calculated for a high rill/interrill ratio.
Slope length (m)	190	70	160	150			
Slope gradient (%)	14	13	5	5			
Length/gradient (. . -factor)	8.62	3.78	1.77	1.70			
Erosion control practice (. -factor)	1.3	1.3	1.3	1.3	1.3	1.3	
Ground cover (. -factor)	1	1	1	1	1	1	

Sediment Basin Design Criteria (for Type D/F basins only. Leave blank for Type C basins)

Storage (soil) zone design (no of months)	2	2	2	2			Minimum is generally 2 months
Cv (Volumetric runoff coefficient)	0.57	0.57	0.57	0.57			See Table F2, page F-4 in Appendix F

Calculations and Type D/F Sediment Basin Volumes

Soil loss (t/ha/yr)	2208	967	452	436			
Soil Loss Class	7	6	4	4			See Table 4.2, page 4-13
Soil loss (m^3/ha/yr)	1698	744	348	335			Conversion to cubic metres
Sediment basin storage (soil) volume (m^3)	971	235					See Sections 6.3.4(i) for calculations
Sediment basin settling (water) volume (m^3)	1357	752	1476	1665			See Sections 6.3.4(i) for calculations
Sediment basin total volume (m^3)	2328	987					

NB for sizing of Type C (coarse) sediment basins, see Worksheet 3 (if required).

1. Erosion Hazard and Sediment Basins

Site Name: Maroota Sand Quarry

Site Location: Maroota Sand Quarry

Precinct/Stage: Stage One

Other Details:

Site area	Sub-catchment or Name of Structure						Notes
	1A	1B	1C	1D	1E		
Total catchment area (ha)	1.89	5	2.13	2.54	10.84		
Disturbed catchment area (ha)	1.89	5	2.13				

Soil analysis (enter sediment type if known, or laboratory particle size data)

Sediment Type (C, F or D) if known:	F	F	F	F	F		From Appendix C (if known)
% sand (fraction 0.02 to 2.00 mm)							Enter the percentage of each soil fraction. E.g. enter 10 for 10%
% silt (fraction 0.002 to 0.02 mm)							
% clay (fraction finer than 0.002 mm)							
Dispersion percentage							E.g. enter 10 for dispersion of 10%
% of whole soil dispersible							See Section 6.3.3(e). Auto-calculated
Soil Texture Group	F	F	F	F	F		Automatic calculation from above

Rainfall data

Design rainfall depth (no of days)	5	5	5	5	5		See Section 6.3.4 and, particularly, Table 6.3 on pages 6-24 and 6-25.
Design rainfall depth (percentile)	95	95	95	95	95		
x-day, y-percentile rainfall event (mm)	69.4	69.4	69.4	69.4	69.4		
Rainfall R-factor (if known)	2290	2290	2290	2290	2290		Only need to enter one or the other here
IFD: 2-year, 6-hour storm (if known)							

RUSLE Factors

Rainfall erosivity (. -factor)	2290	2290	2290	2290	2290		Auto-filled from above
Soil erodibility (. -factor)	0.086	0.086	0.086	0.086	0.086		RUSLE LS factor calculated for a high rill/interrill ratio.
Slope length (m)	200	210	160	300	300		
Slope gradient (%)	0.2	8	5	9	9		
Length/gradient (. . -factor)	0.06	3.84	1.77	5.72	5.72		
Erosion control practice (. -factor)	1.3	1.3	1.3	1.3	1.3	1.3	
Ground cover (. -factor)	1	1	1	1	1	1	

Sediment Basin Design Criteria (for Type D/F basins only. Leave blank for Type C basins)

Storage (soil) zone design (no of months)	2	2	2	2	2	2	Minimum is generally 2 months
Cv (Volumetric runoff coefficient)	0.57	0.57	0.57	0.57	0.57		See Table F2, page F-4 in Appendix F

Calculations and Type D/F Sediment Basin Volumes

Soil loss (t/ha/yr)	15	984	452	1464	1464		
Soil Loss Class	1	6	4	6	6		See Table 4.2, page 4-13
Soil loss (m^3/ha/yr)	12	757	348	1126	1126		Conversion to cubic metres
Sediment basin storage (soil) volume (m^3)	4	631	123				See Sections 6.3.4(i) for calculations
Sediment basin settling (water) volume (m^3)	748	1978	843	1005	4288		See Sections 6.3.4(i) for calculations
Sediment basin total volume (m^3)	752	2609	966				

NB for sizing of Type C (coarse) sediment basins, see Worksheet 3 (if required).

1. Erosion Hazard and Sediment Basins

Site Name: Maroota Sand Quarry

Site Location: Maroota Sand Quarry

Precinct/Stage: Stage One

Other Details:

Site area	Sub-catchment or Name of Structure						Notes
	2	3	4				
Total catchment area (ha)	9.77	3.59	4.13				
Disturbed catchment area (ha)	4.91						

Soil analysis (enter sediment type if known, or laboratory particle size data)

Sediment Type (C, F or D) if known:	F	F	F	F	F	F	From Appendix C (if known)
% sand (fraction 0.02 to 2.00 mm)							Enter the percentage of each soil fraction. E.g. enter 10 for 10%
% silt (fraction 0.002 to 0.02 mm)							
% clay (fraction finer than 0.002 mm)							
Dispersion percentage							E.g. enter 10 for dispersion of 10%
% of whole soil dispersible							See Section 6.3.3(e). Auto-calculated
Soil Texture Group	F	F	F	F	F	F	Automatic calculation from above

Rainfall data

Design rainfall depth (no of days)	5	5	5				See Section 6.3.4 and, particularly, Table 6.3 on pages 6-24 and 6-25.
Design rainfall depth (percentile)	95	95	95				
x-day, y-percentile rainfall event (mm)	69.4	69.4	69.4				
Rainfall R-factor (if known)	2290	2290	2290				Only need to enter one or the other here
IFD: 2-year, 6-hour storm (if known)							

RUSLE Factors

Rainfall erosivity (. -factor)	2290	2290	2290				Auto-filled from above
Soil erodibility (. -factor)	0.086	0.086	0.086				RUSLE LS factor calculated for a high rill/interrill ratio.
Slope length (m)	190	160	150				
Slope gradient (%)	14	5	5				
Length/gradient (. . -factor)	8.62	1.77	1.70				
Erosion control practice (. -factor)	1.3	1.3	1.3	1.3	1.3	1.3	
Ground cover (. -factor)	1	1	1	1	1	1	

Sediment Basin Design Criteria (for Type D/F basins only. Leave blank for Type C basins)

Storage (soil) zone design (no of months)	2	2	2	2			Minimum is generally 2 months
Cv (Volumetric runoff coefficient)	0.57	0.57	0.57				See Table F2, page F-4 in Appendix F

Calculations and Type D/F Sediment Basin Volumes

Soil loss (t/ha/yr)	2208	452	436				
Soil Loss Class	7	4	4				See Table 4.2, page 4-13
Soil loss (m^3/ha/yr)	1698	348	335				Conversion to cubic metres
Sediment basin storage (soil) volume (m^3)	1390						See Sections 6.3.4(i) for calculations
Sediment basin settling (water) volume (m^3)	3865	1420	1634				See Sections 6.3.4(i) for calculations
Sediment basin total volume (m^3)	5255						

NB for sizing of Type C (coarse) sediment basins, see Worksheet 3 (if required).

1. Erosion Hazard and Sediment Basins

Site Name: Maroota Sand Quarry

Site Location: Maroota Sand Quarry

Precinct/Stage: Stage Two

Other Details:

Site area	Sub-catchment or Name of Structure						Notes
	1A	1B	1C	1D	1E		
Total catchment area (ha)	1.89	5	2.13	2.54	10.84		
Disturbed catchment area (ha)	1.89	5	2.13				

Soil analysis (enter sediment type if known, or laboratory particle size data)

Sediment Type (C, F or D) if known:	F	F	F	F	F		From Appendix C (if known)
% sand (fraction 0.02 to 2.00 mm)							Enter the percentage of each soil fraction. E.g. enter 10 for 10%
% silt (fraction 0.002 to 0.02 mm)							
% clay (fraction finer than 0.002 mm)							
Dispersion percentage							E.g. enter 10 for dispersion of 10%
% of whole soil dispersible							See Section 6.3.3(e). Auto-calculated
Soil Texture Group	F	F	F	F	F		Automatic calculation from above

Rainfall data

Design rainfall depth (no of days)	5	5	5	5	5		See Section 6.3.4 and, particularly, Table 6.3 on pages 6-24 and 6-25.
Design rainfall depth (percentile)	95	95	95	95	95		
x-day, y-percentile rainfall event (mm)	69.4	69.4	69.4	69.4	69.4		
Rainfall R-factor (if known)	2290	2290	2290	2290	2290		Only need to enter one or the other here
IFD: 2-year, 6-hour storm (if known)							

RUSLE Factors

Rainfall erosivity (. -factor)	2290	2290	2290	2290	2290		Auto-filled from above
Soil erodibility (. -factor)	0.086	0.086	0.086	0.086	0.086		RUSLE LS factor calculated for a high rill/interrill ratio.
Slope length (m)	200	210	160	300	300		
Slope gradient (%)	0.2	8	5	9	9		
Length/gradient (. . -factor)	0.06	3.84	1.77	5.72	5.72		
Erosion control practice (. -factor)	1.3	1.3	1.3	1.3	1.3	1.3	
Ground cover (. -factor)	1	1	1	1	1	1	

Sediment Basin Design Criteria (for Type D/F basins only. Leave blank for Type C basins)

Storage (soil) zone design (no of months)	2	2	2	2	2	2	Minimum is generally 2 months
Cv (Volumetric runoff coefficient)	0.57	0.57	0.57		0.57		See Table F2, page F-4 in Appendix F

Calculations and Type D/F Sediment Basin Volumes

Soil loss (t/ha/yr)	15	984	452	1464	1464		
Soil Loss Class	1	6	4	6	6		See Table 4.2, page 4-13
Soil loss (m^3/ha/yr)	12	757	348	1126	1126		Conversion to cubic metres
Sediment basin storage (soil) volume (m^3)	4	631	123				See Sections 6.3.4(i) for calculations
Sediment basin settling (water) volume (m^3)	748	1978	843		4288		See Sections 6.3.4(i) for calculations
Sediment basin total volume (m^3)	752	2609	966				

NB for sizing of Type C (coarse) sediment basins, see Worksheet 3 (if required).

1. Erosion Hazard and Sediment Basins

Site Name: Maroota Sand Quarry

Site Location: Maroota Sand Quarry

Precinct/Stage: Stage Two

Other Details:

Site area	Sub-catchment or Name of Structure						Notes
	2	3	4				
Total catchment area (ha)	9.77	3.587	4.13				
Disturbed catchment area (ha)	6.84						

Soil analysis (enter sediment type if known, or laboratory particle size data)

Sediment Type (C, F or D) if known:	F	F	F	F	F	F	From Appendix C (if known)
% sand (fraction 0.02 to 2.00 mm)							Enter the percentage of each soil fraction. E.g. enter 10 for 10%
% silt (fraction 0.002 to 0.02 mm)							
% clay (fraction finer than 0.002 mm)							
Dispersion percentage							E.g. enter 10 for dispersion of 10%
% of whole soil dispersible							See Section 6.3.3(e). Auto-calculated
Soil Texture Group	F	F	F	F	F	F	Automatic calculation from above

Rainfall data

Design rainfall depth (no of days)	5	5	5				See Section 6.3.4 and, particularly, Table 6.3 on pages 6-24 and 6-25.
Design rainfall depth (percentile)	95	95	95				
x-day, y-percentile rainfall event (mm)	69.4	69.4	69.4				
Rainfall R-factor (if known)	2290	2290	2290				Only need to enter one or the other here
IFD: 2-year, 6-hour storm (if known)							

RUSLE Factors

Rainfall erosivity (. -factor)	2290	2290	2290				Auto-filled from above
Soil erodibility (. -factor)	0.086	0.086	0.086				RUSLE LS factor calculated for a high rill/interrill ratio.
Slope length (m)	190	160	150				
Slope gradient (%)	14	5	5				
Length/gradient (. . -factor)	8.62	1.77	1.70				
Erosion control practice (. -factor)	1.3	1.3	1.3	1.3	1.3	1.3	
Ground cover (. -factor)	1	1	1	1	1	1	

Sediment Basin Design Criteria (for Type D/F basins only. Leave blank for Type C basins)

Storage (soil) zone design (no of months)	2	2	2	2			Minimum is generally 2 months
Cv (Volumetric runoff coefficient)	0.57	0.57	0.57				See Table F2, page F-4 in Appendix F

Calculations and Type D/F Sediment Basin Volumes

Soil loss (t/ha/yr)	2208	452	436				
Soil Loss Class	7	4	4				See Table 4.2, page 4-13
Soil loss (m^3/ha/yr)	1698	348	335				Conversion to cubic metres
Sediment basin storage (soil) volume (m^3)	1936						See Sections 6.3.4(i) for calculations
Sediment basin settling (water) volume (m^3)	3865	1419	1634				See Sections 6.3.4(i) for calculations
Sediment basin total volume (m^3)	5801						

NB for sizing of Type C (coarse) sediment basins, see Worksheet 3 (if required).

1. Erosion Hazard and Sediment Basins

Site Name: Maroota Sand Quarry

Site Location: Maroota Sand Quarry

Precinct/Stage: Stage Three

Other Details:

Site area	Sub-catchment or Name of Structure						Notes
	1A	1B	1C	1D	1E		
Total catchment area (ha)	1.89	5	2.13	2.54	10.84		
Disturbed catchment area (ha)	1.89	5	2.13				

Soil analysis (enter sediment type if known, or laboratory particle size data)

Sediment Type (C, F or D) if known:	F	F	F	F	F		From Appendix C (if known)
% sand (fraction 0.02 to 2.00 mm)							Enter the percentage of each soil fraction. E.g. enter 10 for 10%
% silt (fraction 0.002 to 0.02 mm)							
% clay (fraction finer than 0.002 mm)							
Dispersion percentage							E.g. enter 10 for dispersion of 10%
% of whole soil dispersible							See Section 6.3.3(e). Auto-calculated
Soil Texture Group	F	F	F	F	F		Automatic calculation from above

Rainfall data

Design rainfall depth (no of days)	5	5	5	5	5		See Section 6.3.4 and, particularly, Table 6.3 on pages 6-24 and 6-25.
Design rainfall depth (percentile)	95	95	95	95	95		
x-day, y-percentile rainfall event (mm)	69.4	69.4	69.4	69.4	69.4		
Rainfall R-factor (if known)	2290	2290	2290	2290	2290		Only need to enter one or the other here
IFD: 2-year, 6-hour storm (if known)							

RUSLE Factors

Rainfall erosivity (. -factor)	2290	2290	2290	2290	2290		Auto-filled from above
Soil erodibility (. -factor)	0.086	0.086	0.086	0.086	0.086		RUSLE LS factor calculated for a high rill/interrill ratio.
Slope length (m)	200	210	160	300	300		
Slope gradient (%)	0.2	8	5	9	9		
Length/gradient (. . -factor)	0.06	3.84	1.77	5.72	5.72		
Erosion control practice (. -factor)	1.3	1.3	1.3	1.3	1.3	1.3	
Ground cover (. -factor)	1	1	1	1	1	1	

Sediment Basin Design Criteria (for Type D/F basins only. Leave blank for Type C basins)

Storage (soil) zone design (no of months)	2	2	2	2	2	2	Minimum is generally 2 months
Cv (Volumetric runoff coefficient)	0.57	0.57	0.57		0.57		See Table F2, page F-4 in Appendix F

Calculations and Type D/F Sediment Basin Volumes

Soil loss (t/ha/yr)	15	984	452	1464	1464		
Soil Loss Class	1	6	4	6	6		See Table 4.2, page 4-13
Soil loss (m^3/ha/yr)	12	757	348	1126	1126		Conversion to cubic metres
Sediment basin storage (soil) volume (m^3)	4	631	123				See Sections 6.3.4(i) for calculations
Sediment basin settling (water) volume (m^3)	748	1978	843		4288		See Sections 6.3.4(i) for calculations
Sediment basin total volume (m^3)	752	2609	966				

NB for sizing of Type C (coarse) sediment basins, see Worksheet 3 (if required).

1. Erosion Hazard and Sediment Basins

Site Name: Maroota Sand Quarry

Site Location: Maroota Sand Quarry

Precinct/Stage: Stage Three

Other Details:

Site area	Sub-catchment or Name of Structure						Notes
	2	3	4				
Total catchment area (ha)	10.52	3.587	2.83				
Disturbed catchment area (ha)	8.2						

Soil analysis (enter sediment type if known, or laboratory particle size data)

Sediment Type (C, F or D) if known:	F	F	F	F	F	F	From Appendix C (if known)
% sand (fraction 0.02 to 2.00 mm)							Enter the percentage of each soil fraction. E.g. enter 10 for 10%
% silt (fraction 0.002 to 0.02 mm)							
% clay (fraction finer than 0.002 mm)							
Dispersion percentage							E.g. enter 10 for dispersion of 10%
% of whole soil dispersible							See Section 6.3.3(e). Auto-calculated
Soil Texture Group	F	F	F	F	F	F	Automatic calculation from above

Rainfall data

Design rainfall depth (no of days)	5	5	5				See Section 6.3.4 and, particularly, Table 6.3 on pages 6-24 and 6-25.
Design rainfall depth (percentile)	95	95	95				
x-day, y-percentile rainfall event (mm)	69.4	69.4	69.4				
Rainfall R-factor (if known)	2290	2290	2290				Only need to enter one or the other here
IFD: 2-year, 6-hour storm (if known)							

RUSLE Factors

Rainfall erosivity (. -factor)	2290	2290	2290				Auto-filled from above
Soil erodibility (. -factor)	0.086	0.086	0.086				RUSLE LS factor calculated for a high rill/interrill ratio.
Slope length (m)	200	160	100				
Slope gradient (%)	14	5	5				
Length/gradient (. . -factor)	8.95	1.77	1.35				
Erosion control practice (. -factor)	1.3	1.3	1.3	1.3	1.3	1.3	
Ground cover (. -factor)	1	1	1	1	1	1	

Sediment Basin Design Criteria (for Type D/F basins only. Leave blank for Type C basins)

Storage (soil) zone design (no of months)	2	2	2	2			Minimum is generally 2 months
Cv (Volumetric runoff coefficient)	0.57	0.57	0.57				See Table F2, page F-4 in Appendix F

Calculations and Type D/F Sediment Basin Volumes

Soil loss (t/ha/yr)	2291	452	345				
Soil Loss Class	7	4	3				See Table 4.2, page 4-13
Soil loss (m^3/ha/yr)	1762	348	266				Conversion to cubic metres
Sediment basin storage (soil) volume (m^3)	2409						See Sections 6.3.4(i) for calculations
Sediment basin settling (water) volume (m^3)	4162	1419	1119				See Sections 6.3.4(i) for calculations
Sediment basin total volume (m^3)	6571						

NB for sizing of Type C (coarse) sediment basins, see Worksheet 3 (if required).

1. Erosion Hazard and Sediment Basins

Site Name: Maroota Sand Quarry

Site Location: Maroota Sand Quarry

Precinct/Stage: Stage Four

Other Details:

Site area	Sub-catchment or Name of Structure						Notes
	1A	1B	1C	1D	1E		
Total catchment area (ha)	1.89	5	2.13	2.542	10.84		
Disturbed catchment area (ha)	1.89	5	2.13				

Soil analysis (enter sediment type if known, or laboratory particle size data)

Sediment Type (C, F or D) if known:	F	F	F	F	F		From Appendix C (if known)
% sand (fraction 0.02 to 2.00 mm)							Enter the percentage of each soil fraction. E.g. enter 10 for 10%
% silt (fraction 0.002 to 0.02 mm)							
% clay (fraction finer than 0.002 mm)							
Dispersion percentage							E.g. enter 10 for dispersion of 10%
% of whole soil dispersible							See Section 6.3.3(e). Auto-calculated
Soil Texture Group	F	F	F	F	F		Automatic calculation from above

Rainfall data

Design rainfall depth (no of days)	5	5	5	5	5		See Section 6.3.4 and, particularly, Table 6.3 on pages 6-24 and 6-25.
Design rainfall depth (percentile)	95	95	95	95	95		
x-day, y-percentile rainfall event (mm)	69.4	69.4	69.4	69.4	69.4		
Rainfall R-factor (if known)	2290	2290	2290	2290	2290		Only need to enter one or the other here
IFD: 2-year, 6-hour storm (if known)							

RUSLE Factors

Rainfall erosivity (. -factor)	2290	2290	2290	2290	2290		Auto-filled from above
Soil erodibility (. -factor)	0.086	0.086	0.086	0.086	0.086		RUSLE LS factor calculated for a high rill/interrill ratio.
Slope length (m)	200	210	160	300	300		
Slope gradient (%)	0.2	8	5	9	9		
Length/gradient (. . -factor)	0.06	3.84	1.77	5.72	5.72		
Erosion control practice (. -factor)	1.3	1.3	1.3	1.3	1.3	1.3	
Ground cover (. -factor)	1	1	1	1	1	1	

Sediment Basin Design Criteria (for Type D/F basins only. Leave blank for Type C basins)

Storage (soil) zone design (no of months)	2	2	2	2	2	2	Minimum is generally 2 months
Cv (Volumetric runoff coefficient)	0.57	0.57	0.57		0.57		See Table F2, page F-4 in Appendix F

Calculations and Type D/F Sediment Basin Volumes

Soil loss (t/ha/yr)	15	984	452	1464	1464		
Soil Loss Class	1	6	4	6	6		See Table 4.2, page 4-13
Soil loss (m^3/ha/yr)	12	757	348	1126	1126		Conversion to cubic metres
Sediment basin storage (soil) volume (m^3)	4	631	123				See Sections 6.3.4(i) for calculations
Sediment basin settling (water) volume (m^3)	748	1978	843		4288		See Sections 6.3.4(i) for calculations
Sediment basin total volume (m^3)	752	2609	966				

NB for sizing of Type C (coarse) sediment basins, see Worksheet 3 (if required).

1. Erosion Hazard and Sediment Basins

Site Name: Maroota Sand Quarry

Site Location: Maroota Sand Quarry

Precinct/Stage: Stage Four

Other Details:

Site area	Sub-catchment or Name of Structure						Notes
	2	3	4				
Total catchment area (ha)	11.9	2.782	2.15				
Disturbed catchment area (ha)	11						

Soil analysis (enter sediment type if known, or laboratory particle size data)

Sediment Type (C, F or D) if known:	F	F	F	F	F	F	From Appendix C (if known)
% sand (fraction 0.02 to 2.00 mm)							Enter the percentage of each soil fraction. E.g. enter 10 for 10%
% silt (fraction 0.002 to 0.02 mm)							
% clay (fraction finer than 0.002 mm)							
Dispersion percentage							E.g. enter 10 for dispersion of 10%
% of whole soil dispersible							See Section 6.3.3(e). Auto-calculated
Soil Texture Group	F	F	F	F	F	F	Automatic calculation from above

Rainfall data

Design rainfall depth (no of days)	5	5	5				See Section 6.3.4 and, particularly, Table 6.3 on pages 6-24 and 6-25.
Design rainfall depth (percentile)	95	95	95				
x-day, y-percentile rainfall event (mm)	69.4	69.4	69.4				
Rainfall R-factor (if known)	2290	2290	2290				Only need to enter one or the other here
IFD: 2-year, 6-hour storm (if known)							

RUSLE Factors

Rainfall erosivity (. -factor)	2290	2290	2290				Auto-filled from above
Soil erodibility (. -factor)	0.086	0.086	0.086				RUSLE LS factor calculated for a high rill/interrill ratio.
Slope length (m)	300	160	40				
Slope gradient (%)	14	5	5				
Length/gradient (. . -factor)	12.00	1.77	0.80				
Erosion control practice (. -factor)	1.3	1.3	1.3	1.3	1.3	1.3	
Ground cover (. -factor)	1	1	1	1	1	1	

Sediment Basin Design Criteria (for Type D/F basins only. Leave blank for Type C basins)

Storage (soil) zone design (no of months)	2	2	2	2			Minimum is generally 2 months
Cv (Volumetric runoff coefficient)	0.57	0.57	0.57				See Table F2, page F-4 in Appendix F

Calculations and Type D/F Sediment Basin Volumes

Soil loss (t/ha/yr)	3073	452	204				
Soil Loss Class	7	4	2				See Table 4.2, page 4-13
Soil loss (m^3/ha/yr)	2364	348	157				Conversion to cubic metres
Sediment basin storage (soil) volume (m^3)	4334						See Sections 6.3.4(i) for calculations
Sediment basin settling (water) volume (m^3)	4707	1101	850				See Sections 6.3.4(i) for calculations
Sediment basin total volume (m^3)	9041						

NB for sizing of Type C (coarse) sediment basins, see Worksheet 3 (if required).

1. Erosion Hazard and Sediment Basins

Site Name: Maroota Sand Quarry

Site Location: Maroota Sand Quarry

Precinct/Stage: Stage Five

Other Details:

Site area	Sub-catchment or Name of Structure						Notes
	1A	1B	1C	1D	1E		
Total catchment area (ha)	1.89	5	2.13	2.542	10.84		
Disturbed catchment area (ha)	1.89	5	2.13				

Soil analysis (enter sediment type if known, or laboratory particle size data)

Sediment Type (C, F or D) if known:	F	F	F	F	F	F	From Appendix C (if known)
% sand (fraction 0.02 to 2.00 mm)							Enter the percentage of each soil fraction. E.g. enter 10 for 10%
% silt (fraction 0.002 to 0.02 mm)							
% clay (fraction finer than 0.002 mm)							
Dispersion percentage							E.g. enter 10 for dispersion of 10%
% of whole soil dispersible							See Section 6.3.3(e). Auto-calculated
Soil Texture Group	F	F	F	F	F	F	Automatic calculation from above

Rainfall data

Design rainfall depth (no of days)	5	5	5	5			See Section 6.3.4 and, particularly, Table 6.3 on pages 6-24 and 6-25.
Design rainfall depth (percentile)	95	95	95	95			
x-day, y-percentile rainfall event (mm)	69.4	69.4	69.4	69.4			
Rainfall R-factor (if known)	2290	2290	2290	2290			Only need to enter one or the other here
IFD: 2-year, 6-hour storm (if known)							

RUSLE Factors

Rainfall erosivity (. -factor)	2290	2290	2290	2290			Auto-filled from above
Soil erodibility (. -factor)	0.086	0.086	0.086	0.086	0.086		RUSLE LS factor calculated for a high rill/interrill ratio.
Slope length (m)	200	210	160	300	300		
Slope gradient (%)	0.2	8	5	9	9		
Length/gradient (. . -factor)	0.06	3.84	1.77	5.72	5.72		
Erosion control practice (. -factor)	1.3	1.3	1.3	1.3	1.3	1.3	
Ground cover (. -factor)	1	1	1	1	1	1	

Sediment Basin Design Criteria (for Type D/F basins only. Leave blank for Type C basins)

Storage (soil) zone design (no of months)	2	2	2	2			Minimum is generally 2 months
Cv (Volumetric runoff coefficient)	0.57	0.57	0.57				See Table F2, page F-4 in Appendix F

Calculations and Type D/F Sediment Basin Volumes

Soil loss (t/ha/yr)	15	984	452	1464			
Soil Loss Class	1	6	4	6			See Table 4.2, page 4-13
Soil loss (m^3/ha/yr)	12	757	348	1126			Conversion to cubic metres
Sediment basin storage (soil) volume (m^3)	4	631	123				See Sections 6.3.4(i) for calculations
Sediment basin settling (water) volume (m^3)	748	1978	843				See Sections 6.3.4(i) for calculations
Sediment basin total volume (m^3)	752	2609	966				

NB for sizing of Type C (coarse) sediment basins, see Worksheet 3 (if required).

1. Erosion Hazard and Sediment Basins

Site Name: Maroota Sand Quarry

Site Location: Maroota Sand Quarry

Precinct/Stage: Stage Five

Other Details:

Site area	Sub-catchment or Name of Structure						Notes
	2						
Total catchment area (ha)	15.77						
Disturbed catchment area (ha)	15.77						

Soil analysis (enter sediment type if known, or laboratory particle size data)

Sediment Type (C, F or D) if known:	F	F	F	F	F	F	From Appendix C (if known)
% sand (fraction 0.02 to 2.00 mm)							Enter the percentage of each soil fraction. E.g. enter 10 for 10%
% silt (fraction 0.002 to 0.02 mm)							
% clay (fraction finer than 0.002 mm)							
Dispersion percentage							E.g. enter 10 for dispersion of 10%
% of whole soil dispersible							See Section 6.3.3(e). Auto-calculated
Soil Texture Group	F	F	F	F	F	F	Automatic calculation from above

Rainfall data

Design rainfall depth (no of days)	5						See Section 6.3.4 and, particularly, Table 6.3 on pages 6-24 and 6-25.
Design rainfall depth (percentile)	95						
x-day, y-percentile rainfall event (mm)	69.4						
Rainfall R-factor (if known)	2290						Only need to enter one or the other here
IFD: 2-year, 6-hour storm (if known)							

RUSLE Factors

Rainfall erosivity (. -factor)	2290						Auto-filled from above
Soil erodibility (. -factor)	0.086						RUSLE LS factor calculated for a high rill/interrill ratio.
Slope length (m)	300						
Slope gradient (%)	14						
Length/gradient (. . -factor)	12.00						
Erosion control practice (. -factor)	1.3	1.3	1.3	1.3	1.3	1.3	
Ground cover (. -factor)	1	1	1	1	1	1	

Sediment Basin Design Criteria (for Type D/F basins only. Leave blank for Type C basins)

Storage (soil) zone design (no of months)	2	2	2	2			Minimum is generally 2 months
Cv (Volumetric runoff coefficient)	0.57						See Table F2, page F-4 in Appendix F

Calculations and Type D/F Sediment Basin Volumes

Soil loss (t/ha/yr)	3073						
Soil Loss Class	7						See Table 4.2, page 4-13
Soil loss (m^3/ha/yr)	2364						Conversion to cubic metres
Sediment basin storage (soil) volume (m^3)	6214						See Sections 6.3.4(i) for calculations
Sediment basin settling (water) volume (m^3)	6238						See Sections 6.3.4(i) for calculations
Sediment basin total volume (m^3)	12452						

NB for sizing of Type C (coarse) sediment basins, see Worksheet 3 (if required).

Appendix E: Blue Book Standard Drawings

MATERIALS

ROCK: 150 TO 300mm NOMINAL DIAMETER, HARD, EROSION RESISTANT ROCK. SMALLER ROCK MAY BE USED IF SUITABLE LARGE ROCK IS NOT AVAILABLE.

SANDBAGS: GEOTEXTILE BAGS (WOVEN SYNTHETIC, OR NON-WOVEN BIODEGRADABLE) FILLED WITH CLEAN COARSE SAND, CLEAN AGGREGATE, STRAW OR COMPOST.

INSTALLATION

1. REFER TO APPROVED PLANS FOR LOCATION AND INSTALLATION DETAILS. IF THERE ARE QUESTIONS OR PROBLEMS WITH THE LOCATION OR METHOD OF INSTALLATION, CONTACT THE ENGINEER OR RESPONSIBLE ON-SITE OFFICER FOR ASSISTANCE.

2. PRIOR TO PLACEMENT OF THE CHECK DAMS, ENSURE THE TYPE AND SIZE OF EACH CHECK DAMS WILL NOT CAUSE A SAFETY HAZARD OR CAUSE WATER TO SPILL OUT OF THE DRAIN.

3. LOCATE THE FIRST CHECK DAM AT THE DOWNSTREAM END OF THE SECTION OF CHANNEL BEING PROTECTED. LOCATE EACH SUCCESSIVE CHECK DAM SUCH THAT THE CREST OF THE IMMEDIATE DOWNSTREAM DAM IS LEVEL WITH THE TOE OF THE CHECK DAM BEING INSTALLED.

4. ENSURE THE CHANNEL SLOPE IS NO STEEPER THAN 10:1 (H:V). OTHERWISE CONSIDER THE USE OF A SUITABLE CHANNEL LINER INSTEAD OF THE CHECK DAMS.

5. CONSTRUCT THE CHECK DAM TO THE DIMENSIONS AND PROFILE SHOWN WITHIN THE APPROVED PLAN.

6. WHERE SPECIFIED, THE CHECK DAMS SHALL BE CONSTRUCTED ON A SHEET OF GEOTEXTILE FABRIC USED AS A DOWNSTREAM SPLASH PAD.

7. EACH CHECK DAM SHALL BE EXTENDED UP THE CHANNEL BANK (WHERE PRACTICABLE) TO AN ELEVATION AT LEAST 150mm ABOVE THE CREST LEVEL OF THE DAM.

MAINTENANCE

1. INSPECT EACH CHECK DAM AND THE DRAINAGE CHANNEL AT LEAST WEEKLY AND AFTER RUNOFF-PRODUCING RAINFALL.

2. CORRECT ALL DAMAGE IMMEDIATELY. IF SIGNIFICANT EROSION OCCURS BETWEEN ANY OF THE CHECK DAMS, THEN CHECK THE SPACING OF DAMS AND WHERE NECESSARY INSTALL INTERMEDIATE CHECK DAMS OR A SUITABLE CHANNEL LINER.

3. CHECK FOR DISPLACEMENT OF THE CHECK DAMS

4. CHECK FOR SOIL SCOUR AROUND THE ENDS OF EACH CHECK DAM. IF SUCH EROSION IS OCCURRING, CONSIDER EXTENDING THE WIDTH OF THE CHECK DAM TO AVOID SUCH PROBLEMS.

5. IF SEVERE SOIL EROSION OCCURS EITHER UNDER OR AROUND THE CHECK DAMS, THEN SEEK EXPERT ADVICE ON AN ALTERNATIVE TREATMENT MEASURE.

6. REMOVE ANY SEDIMENT ACCUMULATED BY THE CHECK DAMS, UNLESS IT IS INTENDED THAT THIS SEDIMENT WILL REMAIN WITHIN THE CHANNEL.

7. DISPOSE OF COLLECTED SEDIMENT IN A SUITABLE MANNER THAT WILL NOT CAUSE AN EROSION OR POLLUTION HAZARD.

REMOVAL

1. WHEN CONSTRUCTION WORK WITHIN THE DRAINAGE AREA ABOVE THE CHECK DAMS HAS BEEN COMPLETED, AND THE DISTURBED AREAS AND THE DRAINAGE CHANNEL ARE SUFFICIENTLY STABILISED TO RESTRAIN EROSION, ALL TEMPORARY CHECK DAMS MUST BE REMOVED.

2. REMOVE THE CHECK DAMS AND ASSOCIATED SEDIMENT AND DISPOSE OF IN A SUITABLE MANNER THAT WILL NOT CAUSE AN EROSION OR POLLUTION HAZARD.

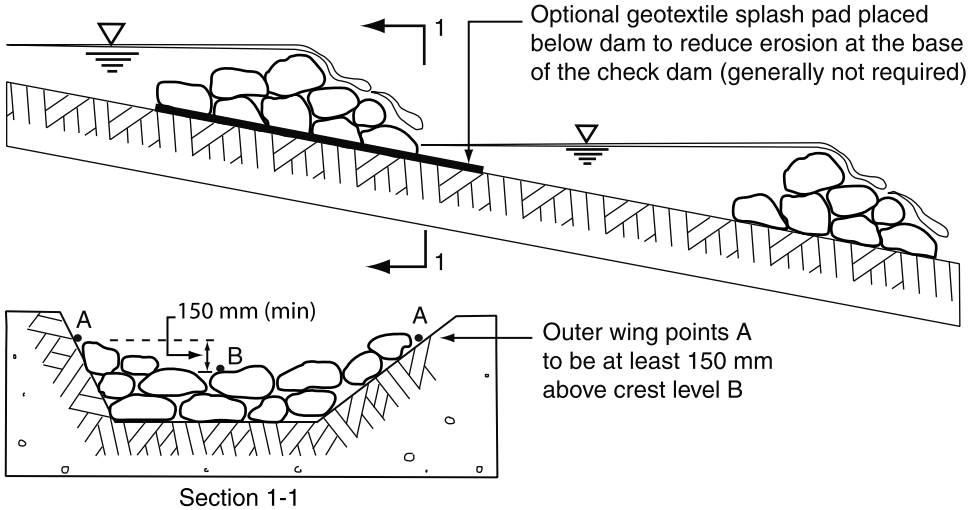

Figure 1 - Layout and profile of check dams (rock check dams shown)

Drawn:	Date:		
GMW	Dec-09	Check Dams	RCD-01

Catchments & Creeks Pty Ltd

MATERIALS

FABRIC: POLYPROPYLENE, POLYAMIDE, NYLON, POLYESTER, OR POLYETHYLENE WOVEN OR NON-WOVEN FABRIC, AT LEAST 700mm IN WIDTH AND A MINIMUM UNIT WEIGHT OF 140g/m^2. ALL FABRICS TO CONTAIN ULTRAVIOLET INHIBITORS AND STABILISERS TO PROVIDE A MINIMUM OF 6 MONTHS OF USEABLE CONSTRUCTION LIFE (ULTRAVIOLET STABILITY EXCEEDING 70%).

FABRIC REINFORCEMENT: WIRE OR STEEL MESH MINIMUM 14-GAUGE WITH A MAXIMUM MESH SPACING OF 200mm.

SUPPORT POSTS/STAKES: 1500mm^2 (MIN) HARDWOOD, 2500mm^2 (MIN) SOFTWOOD, OR 1.5kg/m (MIN) STEEL STAR PICKETS SUITABLE FOR ATTACHING FABRIC.

INSTALLATION

1. REFER TO APPROVED PLANS FOR LOCATION, EXTENT, AND REQUIRED TYPE OF FABRIC (IF SPECIFIED). IF THERE ARE QUESTIONS OR PROBLEMS WITH THE LOCATION, EXTENT, FABRIC TYPE, OR METHOD OF INSTALLATION CONTACT THE ENGINEER OR RESPONSIBLE ON-SITE OFFICER FOR ASSISTANCE.

2. TO THE MAXIMUM DEGREE PRACTICAL, AND WHERE THE PLANS ALLOW, ENSURE THE FENCE IS LOCATED:
(i) TOTALLY WITHIN THE PROPERTY BOUNDARIES;
(ii) ALONG A LINE OF CONSTANT ELEVATION WHEREVER PRACTICAL;
(iii) AT LEAST 2m FROM THE TOE OF ANY FILLING OPERATIONS THAT MAY RESULT IN SHIFTING SOIL/FILL DAMAGING THE FENCE.

3. INSTALL RETURNS WITHIN THE FENCE AT MAXIMUM 20m INTERVALS IF THE FENCE IS INSTALLED ALONG THE CONTOUR, OR 5 TO 10m MAXIMUM SPACING (DEPENDING ON SLOPE) IF THE FENCE IS INSTALLED AT AN ANGLE TO THE CONTOUR. THE 'RETURNS' SHALL CONSIST OF EITHER:
(i) V-SHAPED SECTION EXTENDING AT LEAST 1.5m UP THE SLOPE; OR
(ii) SANDBAG OR ROCK/AGGREGATE CHECK DAM A MINIMUM 1/3 AND MAXIMUM 1/2 FENCE HEIGHT, AND EXTENDING AT LEAST 1.5m UP THE SLOPE.

4. ENSURE THE EXTREME ENDS OF THE FENCE ARE TURNED UP THE SLOPE AT LEAST 1.5m, OR AS NECESSARY, TO MINIMISE WATER BYPASSING AROUND THE FENCE.

5. ENSURE THE SEDIMENT FENCE IS INSTALLED IN A MANNER THAT AVOIDS THE CONCENTRATION OF FLOW ALONG THE FENCE, AND THE UNDESIRABLE DISCHARGE OF WATER AROUND THE ENDS OF THE FENCE.

6. IF THE SEDIMENT FENCE IS TO BE INSTALLED ALONG THE EDGE OF EXISTING TREES, ENSURE CARE IS TAKEN TO PROTECT THE TREES AND THEIR ROOT SYSTEMS DURING INSTALLATION OF THE FENCE. DO NOT ATTACH THE FABRIC TO THE TREES.

7. UNLESS DIRECTED BY THE SITE SUPERVISOR OR THE APPROVED PLANS, EXCAVATE A 200mm WIDE BY 200mm DEEP TRENCH ALONG THE PROPOSED FENCE LINE, PLACING THE EXCAVATED MATERIAL ON THE UP-SLOPE SIDE OF THE TRENCH.

8. ALONG THE LOWER SIDE OF THE TRENCH, APPROPRIATELY SECURE THE STAKES INTO THE GROUND SPACED NO GREATER THAN 3m IF SUPPORTED BY A TOP SUPPORT WIRE OR WEIR MESH BACKING, OTHERWISE NO GREATER THAN 2m.

9. IF SPECIFIED, SECURELY ATTACH THE SUPPORT WIRE OR MESH TO THE UP-SLOPE SIDE OF THE STAKES WITH THE MESH EXTENDING AT LEAST 200mm INTO THE EXCAVATED TRENCH. ENSURE THE MESH AND FABRIC IS ATTACHED TO THE UP-SLOPE SIDE OF THE STAKES EVEN WHEN DIRECTING A FENCE AROUND A CORNER OR SHARP CHANGE OF DIRECTION.

10. WHEREVER POSSIBLE, CONSTRUCT THE SEDIMENT FENCE FROM A CONTINUOUS ROLL OF FABRIC. TO JOIN FABRIC EITHER:
(i) ATTACH EACH END TO TWO OVERLAPPING STAKES WITH THE FABRIC FOLDING AROUND THE ASSOCIATED STAKE ONE TURN, AND WITH THE TWO STAKES TIED TOGETHER WITH WIRE; OR
(ii) OVERLAP THE FABRIC TO THE NEXT ADJACENT SUPPORT POST.

11. SECURELY ATTACH THE FABRIC TO THE SUPPORT POSTS USING 25 X 12.5mm STAPLES, OR TIE WIRE AT MAXIMUM 150mm SPACING.

12. SECURELY ATTACH THE FABRIC TO THE SUPPORT WIRE/MESH (IF ANY) AT A MAXIMUM SPACING OF 1m.

13. ENSURE THE COMPLETED SEDIMENT FENCE IS AT LEAST 450mm, BUT NOT MORE THAN 700mm HIGH. IF A SPILL-THOUGH WEIR IS INSTALLED, ENSURE THE CREST OF THE WEIR IS AT LEAST 300mm ABOVE GROUND LEVEL.

14. BACKFILL THE TRENCH AND TAMP THE FILL TO FIRMLY ANCHOR THE BOTTOM OF THE FABRIC AND MESH TO PREVENT WATER FROM FLOWING UNDER THE FENCE.

ADDITIONAL REQUIREMENTS FOR THE INSTALLATION OF A SPILL-THROUGH WEIR

1. LOCATE THE SPILL-THROUGH WEIR SUCH THAT THE WEIR CREST WILL BE LOWER THAN THE GROUND LEVEL AT EACH END OF THE FENCE.

2. ENSURE THE CREST OF THE SPILL-THROUGH WEIR IS AT LEAST 300mm THE GROUND ELEVATION.

3. SECURELY TIE A HORIZONTAL CROSS MEMBER (WEIR) TO THE SUPPORT POSTS/ STAKES EACH SIDE OF THE WEIR. CUT THE FABRIC DOWN THE SIDE OF EACH POST AND FOLD THE FABRIC OVER THE CROSS MEMBER AND APPROPRIATELY SECURE THE FABRIC.

4. INSTALL A SUITABLE SPLASH PAD AND/OR CHUTE IMMEDIATELY DOWN-SLOPE OF THE SPILL-THROUGH WEIR TO CONTROL SOIL EROSION AND APPROPRIATELY DISCHARGE THE CONCENTRATED FLOW PASSING OVER THE WEIR.

MAINTENANCE

1. INSPECT THE SEDIMENT FENCE AT LEAST WEEKLY AND AFTER ANY SIGNIFICANT RAIN. MAKE NECESSARY REPAIRS IMMEDIATELY.

2. REPAIR ANY TORN SECTIONS WITH A CONTINUOUS PIECE OF FABRIC FROM POST TO POST.

3. WHEN MAKING REPAIRS, ALWAYS RESTORE THE SYSTEM TO ITS ORIGINAL CONFIGURATION UNLESS AN AMENDED LAYOUT IS REQUIRED OR SPECIFIED.

4. IF THE FENCE IS SAGGING BETWEEN STAKES, INSTALL ADDITIONAL SUPPORT POSTS.

5. REMOVE ACCUMULATED SEDIMENT IF THE SEDIMENT DEPOSIT EXCEEDS A DEPTH OF 1/3 THE HEIGHT OF THE FENCE.

6. DISPOSE OF SEDIMENT IN A SUITABLE MANNER THAT WILL NOT CAUSE AN EROSION OR POLLUTION HAZARD.

7. REPLACE THE FABRIC IF THE SERVICE LIFE OF THE EXISTING FABRIC EXCEEDS 6-MONTHS.

REMOVAL

1. WHEN DISTURBED AREAS UP-SLOPE OF THE SEDIMENT FENCE ARE SUFFICIENTLY STABILISED TO RESTRAIN EROSION, THE FENCE MUST BE REMOVED.

2. REMOVE MATERIALS AND COLLECTED SEDIMENT AND DISPOSE OF IN A SUITABLE MANNER THAT WILL NOT CAUSE AN EROSION OR POLLUTION HAZARD.

3. REHABILITATE/REVEGETATE THE DISTURBED GROUND AS NECESSARY TO MINIMISE THE EROSION HAZARD.

Drawn:	Date:		
GMW	May-10	Sediment Fence	ESC-05

Catchments & Creeks Pty Ltd

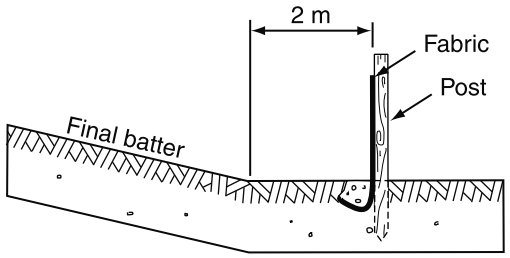

(a) Location of fence relative to base of slope

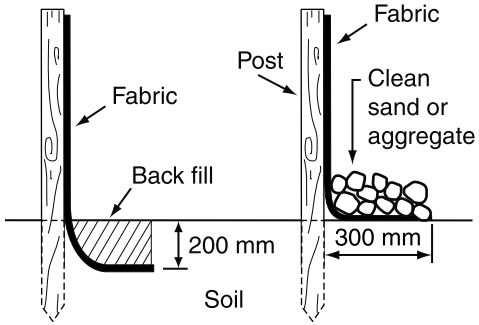

(b) Anchoring base of fabric

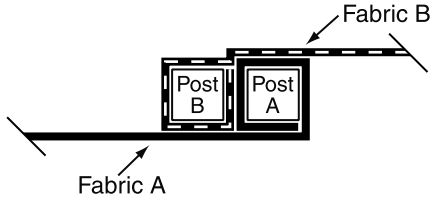

Fabric to fold around each stake one full turn.
Stake B to be drive tightly against Stake A.
The tops of both stakes to be secured with wire.

(c) Joining fabric - Method 1

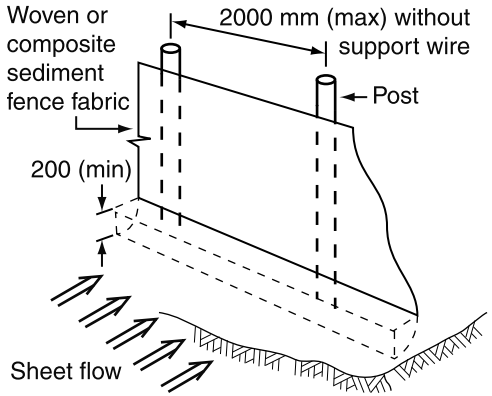

(d) Installation without backing support

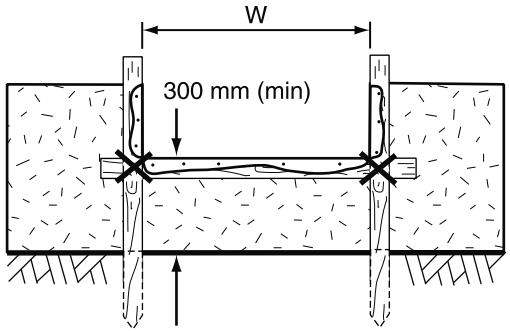

(e) Spill-through weir

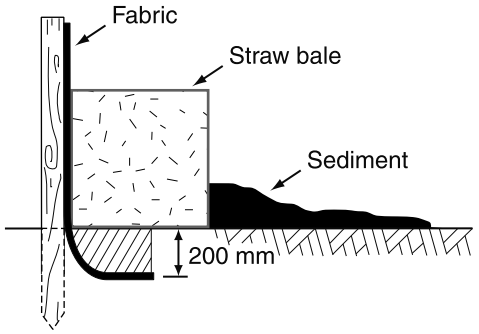

(f) Placement of up-slope straw bale

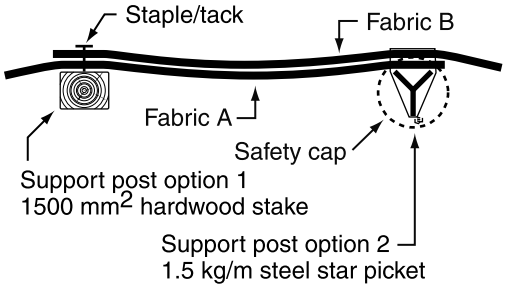

(g) Joining fabric - Method 2

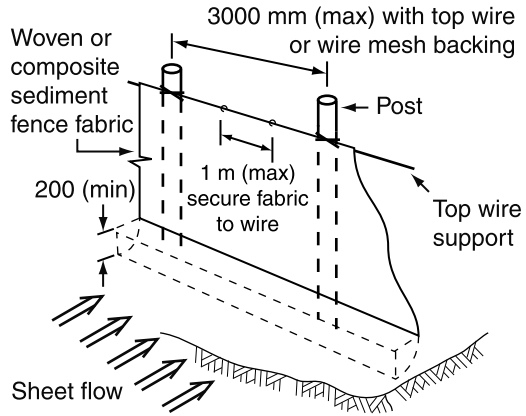

(h) Installation with top wire support

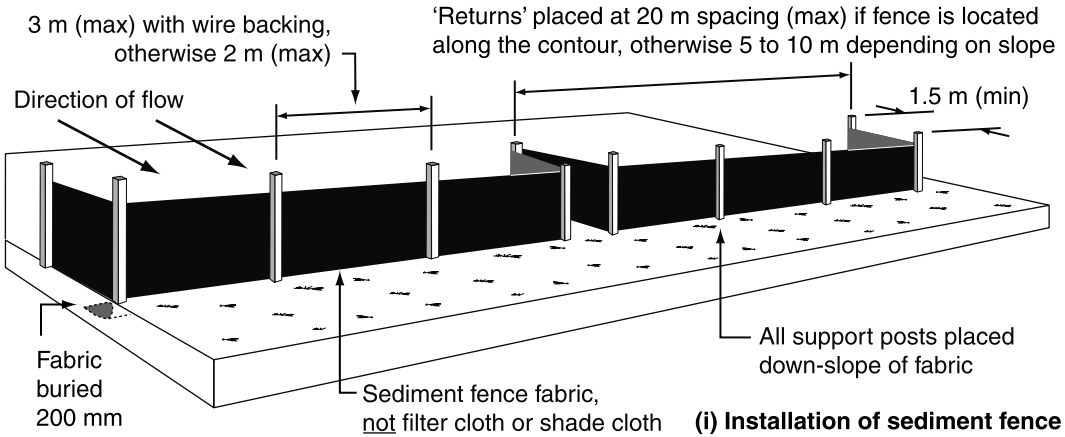

(i) Installation of sediment fence

Notes:

1. Sediment fence to be installed along a line of constant ground elevation wherever practical.
2. Both end of the sediment fence to extend up the slope at least 1m.
3. Support post to be spaced a maximum 2m unless the fence is supported by a top wire or wire mesh backing, in which case 3m maximum spacing.
4. Fence 'returns' shall be installed at maximum 20m spacing if fence is installed along the contour, otherwise 5 to 10m maximum spacing.
5. Minimum 4 staples or tie wires per stake.

Drawn:	Date:		
GMW	Dec-09	Sediment Fence	ESC-04

Catchments & Creeks Pty Ltd

CONSTRUCTION

1. THE SPILLWAY MUST BE EXCAVATED AS SHOWN ON THE PLANS, AND THE EXCAVATED MATERIAL IF CLASSIFIED AS SUITABLE, MUST BE USED IN THE EMBANKMENT, AND IF NOT SUITABLE IT MUST BE DISPOSED OF INTO SPOIL HEAPS.

2. ENSURE EXCAVATED DIMENSIONS ALLOW ADEQUATE BOXING-OUT SUCH THAT THE SPECIFIED ELEVATIONS, GRADES, CHUTE WIDTH, AND ENTRANCE AND EXIT SLOPES FOR THE EMERGENCY SPILLWAY WILL BE ACHIEVED AFTER PLACEMENT OF THE ROCK OR OTHER SCOUR PROTECTION MEASURES AS SPECIFIED IN THE PLANS.

3. PLACE SPECIFIED SCOUR PROTECTION MEASURES ON THE EMERGENCY SPILLWAY. ENSURE THE FINISHED GRADE BLENDS WITH THE SURROUNDING AREA TO ALLOW A SMOOTH FLOW TRANSITION FROM SPILLWAY TO DOWNSTREAM CHANNEL.

4. IF A SYNTHETIC FILTER FABRIC UNDERLAY IS SPECIFIED, PLACE THE FILTER FABRIC DIRECTLY ON THE PREPARED FOUNDATION. IF MORE THAN 1 SHEET OF FILTER FABRIC IS REQUIRED, OVERLAP THE EDGES BY AT LEAST 300mm AND PLACE ANCHOR PINS AT MINIMUM 1m SPACING ALONG THE OVERLAP. BURY THE UPSTREAM END OF THE FABRIC A MINIMUM 300mm BELOW GROUND AND WHERE NECESSARY, BURY THE LOWER END OF THE FABRIC OR OVERLAP A MINIMUM 300mm OVER THE NEXT DOWNSTREAM SECTION AS REQUIRED. ENSURE THE FILTER FABRIC EXTENDS AT LEAST 1000mm UPSTREAM OF THE SPILLWAY CREST.

5. TAKE CARE NOT TO DAMAGE THE FABRIC DURING OR AFTER PLACEMENT. IF DAMAGE OCCURS, REMOVE THE ROCK AND REPAIR THE SHEET BY ADDING ANOTHER LAYER OF FABRIC WITH A MINIMUM OVERLAP OF 300mm AROUND THE DAMAGED AREA. IF EXTENSIVE DAMAGE IS SUSPECTED, REMOVE AND REPLACE THE ENTIRE SHEET.

6. WHERE LARGE ROCK IS USED, OR MACHINE PLACEMENT IS DIFFICULT, A MINIMUM 100mm LAYER OF FINE GRAVEL, AGGREGATE, OR SAND MAY BE NEEDED TO PROTECT THE FABRIC.

7. PLACEMENT OF ROCK SHOULD FOLLOW IMMEDIATELY AFTER PLACEMENT OF THE FILTER FABRIC. PLACE ROCK SO THAT IT FORMS A DENSE, WELL-GRADED MASS OF ROCK WITH A MINIMUM OF VOIDS. THE DESIRED DISTRIBUTION OF ROCK THROUGHOUT THE MASS MAY BE OBTAINED BY SELECTIVE LOADING AT THE QUARRY AND CONTROLLED DUMPING DURING FINAL PLACEMENT.

8. THE FINISHED SLOPE SHOULD BE FREE OF POCKETS OF SMALL ROCK OR CLUSTERS OF LARGE ROCKS. HAND PLACING MAY BE NECESSARY TO ACHIEVE THE PROPER DISTRIBUTION OF ROCK SIZES TO PRODUCE A RELATIVELY SMOOTH, UNIFORM SURFACE. THE FINISHED GRADE OF THE ROCK SHOULD BLEND WITH THE SURROUNDING AREA. NO OVERFALL OR PROTRUSION OF ROCK SHOULD BE APPARENT.

9. ENSURE THAT THE FINAL ARRANGEMENT OF THE SPILLWAY CREST WILL NOT PROMOTE EXCESSIVE FLOW THROUGH THE ROCK SUCH THAT THE WATER CAN BE RETAINED WITHIN THE SETTLING BASIN AN ELEVATION NO LESS THAN 50mm ABOVE OR BELOW THE NOMINATED SPILLWAY CREST ELEVATION.

MAINTENANCE

1. DURING THE CONSTRUCTION PERIOD, INSPECT THE SPILLWAY PRIOR TO FORECAST RAINFALL, DAILY DURING EXTENDED PERIODS OF RAINFALL, AFTER SIGNIFICANT RUNOFF PRODUCING STORM EVENTS, OR OTHERWISE ON A WEEKLY BASIS. MAKE REPAIRS AS NECESSARY.

2. CHECK FOR MOVEMENT OF, OR DAMAGE TO, THE SPILLWAY'S LINING, INCLUDING SURFACE CRACKING.

3. CHECK FOR SOIL SCOUR ADJACENT THE SPILLWAY. INVESTIGATE THE CAUSE OF ANY SCOUR, AND REPAIR AS NECESSARY.

4. WHEN MAKING REPAIRS, ALWAYS RESTORE THE SPILLWAY TO ITS ORIGINAL CONFIGURATION UNLESS AN AMENDED LAYOUT IS REQUIRED.

REMOVAL

1. TEMPORARY SPILLWAYS SHOULD BE REMOVED WHEN AN ALTERNATIVE, STABLE, DRAINAGE SYSTEM IS AVAILABLE.

2. REMOVE ALL MATERIALS AND DEPOSITED SEDIMENT, AND DISPOSE OF IN A SUITABLE MANNER THAT WILL NOT CAUSE AN EROSION OR POLLUTION HAZARD.

3. GRADE THE AREA IN PREPARATION FOR STABILISATION, THEN STABILISE THE AREA AS SPECIFIED IN THE APPROVED PLAN.

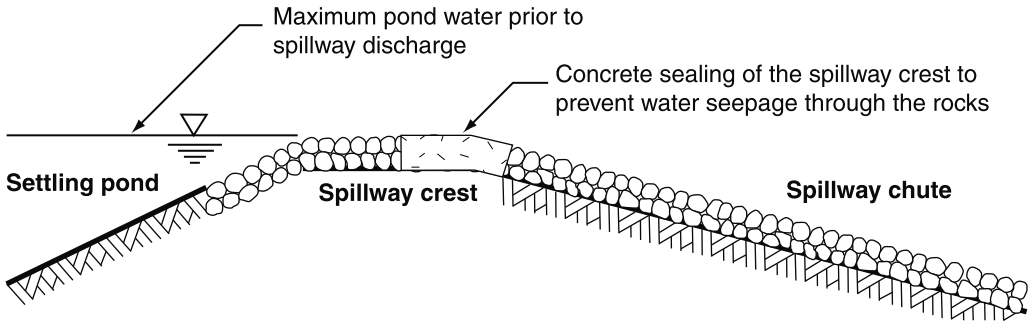

Figure 1 - Example of seepage control on the spillway crest

Drawn:	Date:		
GMW	Dec-09	Emergency Spillways	ES-1

Catchments & Creeks Pty Ltd

INSTALLATION

1. REFER TO APPROVED PLANS FOR LOCATION, EXTENT, AND CONSTRUCTION DETAILS. IF THERE ARE QUESTIONS OR PROBLEMS WITH THE LOCATION, EXTENT, OR METHOD OF INSTALLATION, CONTACT THE ENGINEER OR RESPONSIBLE ON-SITE OFFICER FOR ASSISTANCE.

2. ENSURE ALL NECESSARY SOIL TESTING (e.g. SOIL pH, NUTRIENT LEVELS) AND ANALYSIS HAS BEEN COMPLETED, AND REQUIRED SOIL ADJUSTMENTS PERFORMED PRIOR TO PLANTING.

3. CLEAR THE LOCATION FOR THE CHANNEL, CLEARING ONLY WHAT IS NEEDED TO PROVIDE ACCESS FOR PERSONNEL AND CONSTRUCTION EQUIPMENT.

4. REMOVE ROOTS, STUMPS, AND OTHER DEBRIS AND DISPOSE OF THEM PROPERLY. DO NOT USE DEBRIS TO BUILD ANY ASSOCIATED EMBANKMENTS.

5. EXCAVATE THE DIVERSION CHANNEL TO THE SPECIFIED SHAPE, ELEVATION AND GRADIENT. THE SIDES OF THE CHANNEL SHOULD BE NO STEEPER THAN A 2:1 (H:V) IF CONSTRUCTED IN EARTH, UNLESS SPECIFICALLY DIRECTED WITHIN THE APPROVED PLANS.

6. STABILISE THE CHANNEL AND BANKS IMMEDIATELY UNLESS IT WILL OPERATE FOR LESS THAN 30 DAYS. IN EITHER CASE, TEMPORARY EROSION PROTECTION (MATTING, ROCK, ETC.) WILL BE REQUIRED AS SPECIFIED WITHIN THE APPROVED PLANS OR AS DIRECTED.

7. ENSURE THE CHANNEL DISCHARGES TO A STABLE AREA.

ADDITIONAL REQUIREMENTS FOR TURF PLACEMENT:

1. TURF SHOULD BE USED WITHIN 12 HOURS OF DELIVERY, OTHERWISE ENSURE THE TURF IS STORED IN CONDITIONS APPROPRIATE FOR THE WEATHER CONDITIONS (e.g. A SHADED AREA).

2. MOISTENING THE TURF AFTER IT IS UNROLLED WILL HELP MAINTAIN ITS VIABILITY.

3. TURF SHOULD BE LAID ON A MINIMUM 75mm BED OF ADEQUATELY FERTILISED TOPSOIL. RAKE THE SOIL SURFACE TO BREAK THE CRUST JUST BEFORE LAYING THE TURF.

4. DURING THE WARMER MONTHS, LIGHTLY IRRIGATE THE SOIL IMMEDIATELY BEFORE LAYING THE TURF.

5. ENSURE THE TURF IS NOT LAID ON GRAVEL, HEAVILY COMPACTED SOILS, OR SOILS THAT HAVE BEEN RECENTLY TREATED WITH HERBICIDES.

6. ENSURE THE TURF EXTENDS UP THE SIDES OF THE DRAIN AT LEAST 100mm ABOVE THE ELEVATION OF THE CHANNEL INVERT, OR AT LEAST TO A SUFFICIENT ELEVATION TO FULLY CONTAIN EXPECTED CHANNEL FLOW.

7. ON CHANNEL GRADIENTS OF 3:1(H:V) OR STEEPER, OR IN SITUATIONS WHERE HIGH FLOW VELOCITIES (i.e. VELOCITY >1.5m/s) ARE LIKELY WITHIN THE FIRST TWO WEEK FOLLOWING PLACEMENT, SECURE THE INDIVIDUAL TURF STRIPS WITH WOODEN OR PLASTIC PEGS.

8. ENSURE THAT INTIMATE CONTACT IS ACHIEVED AND MAINTAINED BETWEEN THE TURF AND THE SOIL SUCH THAT SEEPAGE FLOW BENEATH THE TURF IS AVOIDED.

9. WATER UNTIL THE SOIL IS WET 100mm BELOW THE TURF. THEREAFTER, WATERING SHOULD BE SUFFICIENT TO MAINTAIN AND PROMOTE HEALTHY GROWTH

MAINTENANCE

1. DURING THE SITE'S CONSTRUCTION PERIOD, INSPECT THE DIVERSION CHANNEL WEEKLY AND AFTER ANY INCREASE IN FLOWS WITHIN THE CHANNEL. REPAIR ANY SLUMPS, WHEEL TRACK DAMAGE OR LOSS OF FREEBOARD.

2. ENSURE FILL MATERIAL OR SEDIMENT IS NOT PARTIALLY BLOCKING THE CHANNEL. WHERE NECESSARY, REMOVE ANY DEPOSITED MATERIAL TO ALLOW FREE DRAINAGE.

3. DISPOSE OF ANY COLLECTED SEDIMENT OR FILL IN A MANNER THAT WILL NOT CREATE AN EROSION OR POLLUTION HAZARD.

REMOVAL

1. WHEN THE CONSTRUCTION WORK ABOVE A TEMPORARY DIVERSION CHANNEL IS FINISHED AND THE AREA IS STABILISED, THE AREA SHOULD BE APPROPRIATELY REHABILITATED.

2. DISPOSE OF ANY COLLECTED SEDIMENT OR FILL IN A MANNER THAT WILL NOT CREATE AN EROSION OR POLLUTION HAZARD.

3. GRADE THE AREA AND SMOOTH IT OUT IN PREPARATION FOR STABILISATION.

4. STABILISE THE AREA AS SPECIFIED IN THE APPROVED PLAN.

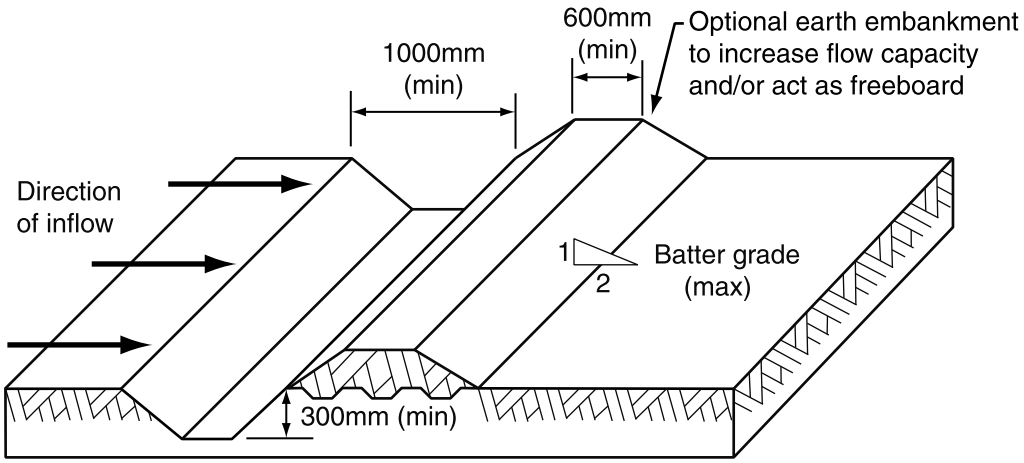

Figure 1 - Typical profile of diversion channel with bank

Drawn:	Date:		
GMW	Dec-09	Diversion Channels	DC-01

Catchments & Creeks Pty Ltd

INSTALLATION

1. REFER TO APPROVED PLANS FOR LOCATION, EXTENT, AND CONSTRUCTION DETAILS. IF THERE ARE QUESTIONS OR PROBLEMS WITH THE LOCATION, EXTENT, OR METHOD OF INSTALLATION, CONTACT THE ENGINEER OR RESPONSIBLE ON-SITE OFFICER FOR ASSISTANCE.

2. CLEAR THE LOCATION FOR THE BANK, CLEARING ONLY THE AREA THAT IS NEEDED TO PROVIDE ACCESS FOR PERSONNEL AND EQUIPMENT.

3. REMOVE ROOTS, STUMPS, AND OTHER DEBRIS AND DISPOSE OF THEM PROPERLY. DO NOT USE DEBRIS TO BUILD THE BANK.

4. FORM THE BANK FROM THE MATERIAL, AND TO THE DIMENSION SPECIFIED IN THE APPROVED PLANS.

5. IF EARTH IS USED, THEN ENSURE THE SIDES OF THE BANK ARE NO STEEPER THAN A 2:1 (H:V) SLOPE, AND THE COMPLETED BANK MUST BE AT LEAST 500mm HIGH.

6. IF FORMED FROM SANDBAGS, THEN ENSURE THE BAGS ARE TIGHTLY PACKED SUCH THAT WATER LEAKAGE THROUGH THE BAGS IS MINIMISED.

7. CHECK THE BANK ALIGNMENT TO ENSURE POSITIVE DRAINAGE IN THE DESIRED DIRECTION.

8. THE BANK SHOULD BE VEGETATED (TURFED, SEEDED AND MULCHED), OR OTHERWISE STABILISED IMMEDIATELY, UNLESS IT WILL OPERATE FOR LESS THAN 30 DAYS OR IF SIGNIFICANT RAINFALL IS NOT EXPECTED DURING THE LIFE OF THE BANK.

9. ENSURE THE EMBANKMENT DRAINS TO A STABLE OUTLET, AND DOES NOT DISCHARGE TO AN UNSTABLE FILL SLOPE.

MAINTENANCE

1. INSPECT FLOW DIVERSION BANKS AT LEAST WEEKLY AND AFTER RUNOFF-PRODUCING RAINFALL.

2. INSPECT THE BANK FOR ANY SLUMPS, WHEEL TRACK DAMAGE OR LOSS OF FREEBOARD. MAKE REPAIRS AS NECESSARY.

3. CHECK THAT FILL MATERIAL OR SEDIMENT HAS NOT PARTIALLY BLOCKED THE DRAINAGE PATH UP-SLOPE OF THE EMBANKMENT. WHERE NECESSARY, REMOVE ANY DEPOSITED MATERIAL TO ALLOW FREE DRAINAGE.

4. DISPOSE OF ANY COLLECTED SEDIMENT OR FILL IN A MANNER THAT WILL NOT CREATE AN EROSION OR POLLUTION HAZARD.

5. REPAIR ANY PLACES IN THE BANK THAT ARE WEAKENED OR IN RISK OF FAILURE.

REMOVAL

1. WHEN THE SOIL DISTURBANCE ABOVE THE BANK IS FINISHED AND THE AREA IS STABILISED, THE FLOW DIVERSION BANK SHOULD BE REMOVED, UNLESS IT IS TO REMAIN AS A PERMANENT DRAINAGE FEATURE.

2. DISPOSE OF ANY SEDIMENT OR EARTH IN A MANNER THAT WILL NOT CREATE AN EROSION OR POLLUTION HAZARD.

3. GRADE THE AREA AND SMOOTH IT OUT IN PREPARATION FOR STABILISATION.

4. STABILISE THE AREA BY GRASSING OR AS SPECIFIED IN THE APPROVED PLAN.

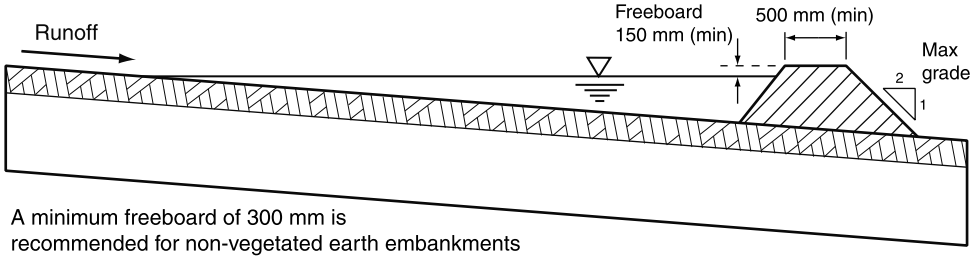

Figure 1 - Typical profile of flow diversion bank formed from earth

Table 1 - Recommended dimensions of flow diversion banks

Parameter	Earth banks	Vegetated banks	Compost berms	Sandbag berms
Height (min)	500 mm	500 mm	300 mm	N/A
Top width (min)	500 mm	500 mm	100 mm	N/A
Base width (min)	2500 mm	2500 mm	600 mm	N/A
Side slope (max)	2:1 (H:V)	2:1 (H:V)	1:1 (H:V)	N/A
Freeboard	300 mm	150 mm	100 mm	50 mm

Drawn:	Date:		
GMW	Dec-09	Flow Diversion Banks	DB-01

Catchments & Creeks Pty Ltd

INSTALLATION

1. REFER TO APPROVED PLANS FOR LOCATION, EXTENT, AND CONSTRUCTION DETAILS. IF THERE ARE QUESTIONS OR PROBLEMS WITH THE LOCATION, EXTENT, OR METHOD OF INSTALLATION, CONTACT THE ENGINEER OR RESPONSIBLE ON-SITE OFFICER FOR ASSISTANCE.

2. ENSURE ALL NECESSARY SOIL TESTING (e.g. SOIL pH, NUTRIENT LEVELS) AND ANALYSIS HAS BEEN COMPLETED, AND REQUIRED SOIL ADJUSTMENTS PERFORMED PRIOR TO PLANTING.

3. CLEAR THE LOCATION FOR THE CATCH DRAIN, CLEARING ONLY WHAT IS NEEDED TO PROVIDE ACCESS FOR PERSONNEL AND EQUIPMENT FOR INSTALLATION.

4. REMOVE ROOTS, STUMPS, AND OTHER DEBRIS AND DISPOSE OF THEM PROPERLY. DO NOT USE DEBRIS TO BUILD THE BANK.

5. GRADE THE DRAIN TO THE SPECIFIED SLOPE AND FORM THE ASSOCIATED EMBANKMENT WITH COMPACTED FILL. NOTE THAT THE DRAIN INVERT MUST FALL 10cm EVERY 10m FOR EACH 1% OF CHANNEL GRADIENT.

6. ENSURE THE SIDES OF THE CUT DRAIN ARE NO STEEPER THAN A 1.5:1 (H:V) SLOPE AND THE EMBANKMENT FILL SLOPES NO STEEPER THAN 2:1.

7. ENSURE THE COMPLETED DRAIN HAS SUFFICIENT DEEP (AS SPECIFIED FOR THE TYPE OF DRAIN) MEASURED FROM THE DRAIN INVERT TO THE TOP OF THE EMBANKMENT. WHERE NECESSARY, CUT THE DRAIN SLIGHTLY DEEPER THAN THAT SPECIFIED ON THE PLANS SUCH THAT THE CORRECT CHANNEL DIMENSIONS ARE ACHIEVED FOLLOWING PLACEMENT OF THE TURF.

8. ENSURE THE DRAIN HAS A CONSTANT FALL IN THE DESIRED DIRECTION FREE OF OBSTRUCTIONS.

9. TURF SHOULD BE USED WITHIN 12-HOURS OF DELIVERY, OTHERWISE ENSURE THE TURF IS STORED IN CONDITIONS APPROPRIATE FOR THE WEATHER CONDITIONS (e.g. A SHADED AREA).

10. MOISTENING THE TURF AFTER IT IS UNROLLED WILL HELP MAINTAIN ITS VIABILITY.

11. TURF SHOULD BE LAID ON A MINIMUM 75mm BED OF ADEQUATELY FERTILISED TOPSOIL. RAKE THE SOIL SURFACE TO BREAK THE CRUST JUST BEFORE LAYING THE TURF.

12. DURING THE WARMER MONTHS, LIGHTLY IRRIGATE THE SOIL IMMEDIATELY BEFORE LAYING THE TURF.

13. ENSURE THE TURF IS NOT LAID ON GRAVEL, HEAVILY COMPACTED SOILS, OR SOILS THAT HAVE BEEN RECENTLY TREATED WITH HERBICIDES.

14. FOR WIDE DRAINS AND HIGH VELOCITY CHUTES, LAY THE FIRST ROW OF TURF IN A STRAIGHT LINE DIAGONAL TO THE DIRECTION OF FLOW. STAGGER SUBSEQUENT ROWS IN A BRICK-LIKE (STRETCHER BOND) PATTERN. THE TURF SHOULD NOT BE STRETCHED OR OVERLAPPED. USE A KNIFE OR SHARP SPADE TO TRIM AND FIT IRREGULARLY SHAPED AREAS.

15. FOR NARROW DRAINS, LAY THE TURF ALONG THE DIRECTION OF THE DRAIN, ENSURING, WHEREVER PRACTICABLE, THAT A LONGITUDINAL JOINT BETWEEN TWO STRIPS OF TURF IS NOT POSITIONED ALONG THE INVERT OF THE DRAIN.

16. ENSURE THE TURF EXTENDS UP THE SIDES OF THE DRAIN AT LEAST 100mm ABOVE THE ELEVATION OF THE CHANNEL INVERT, OR AT LEAST TO A SUFFICIENT ELEVATION TO FULLY CONTAIN EXPECTED CHANNEL FLOW.

17. ON CHANNEL GRADIENTS OF 3:1(H:V) OR STEEPER, OR IN SITUATIONS WHERE HIGH FLOW VELOCITIES (i.e. VELOCITY >1.5m/s) ARE LIKELY WITHIN THE FIRST 2-WEEKS FOLLOWING PLACEMENT, SECURE THE INDIVIDUAL TURF STRIPS WITH WOODEN OR PLASTIC PEGS.

18. ENSURE THAT INTIMATE CONTACT IS ACHIEVED AND MAINTAINED BETWEEN THE TURF AND THE SOIL SUCH THAT SEEPAGE FLOW BENEATH THE TURF IS AVOIDED.

19. WATER UNTIL THE SOIL IS WET 100mm BELOW THE TURF. THEREAFTER, WATERING SHOULD BE SUFFICIENT TO MAINTAIN AND PROMOTE HEALTHY GROWTH.

20. ENSURE THE DRAIN DISCHARGES TO A STABLE OUTLET SUCH THAT DOWN-SLOPE SOIL EROSION WILL BE PREVENTED FROM OCCURRING. ENSURE THE DRAIN DOES NOT DISCHARGE TO AN UNSTABLE FILL SLOPE.

MAINTENANCE

1. INSPECT ALL CATCH DRAINS AT LEAST WEEKLY AND AFTER RUNOFF-PRODUCING STORM EVENTS AND REPAIR ANY SLUMPS, BANK DAMAGE, OR LOSS OF FREEBOARD.

2. ENSURE FILL MATERIAL OR SEDIMENT IS NOT PARTIALLY BLOCKING THE DRAIN. WHERE NECESSARY, REMOVE ANY DEPOSITED MATERIAL TO ALLOW FREE DRAINAGE.

3. DISPOSE OF ANY SEDIMENT OR FILL IN A MANNER THAT WILL NOT CREATE AN EROSION OR POLLUTION HAZARD.

REMOVAL

1. WHEN THE SOIL DISTURBANCE ABOVE THE CATCH DRAIN IS FINISHED AND THE AREA IS STABILISED, THE DRAIN AND ANY ASSOCIATED BANKS SHOULD BE REMOVED, UNLESS IT IS TO REMAIN AS A PERMANENT DRAINAGE FEATURE.

2. DISPOSE OF ANY SEDIMENT OR EARTH IN A MANNER THAT WILL NOT CREATE AN EROSION OR POLLUTION HAZARD.

3. GRADE THE AREA AND SMOOTH IT OUT IN PREPARATION FOR STABILISATION.

4. STABILISE THE AREA BY GRASSING OR AS SPECIFIED WITHIN THE APPROVED PLAN.

Drawn:	Date:		
GMW	Dec-09	Catch Drains - Grass Lined	CD-03

Catchments & Creeks Pty Ltd

INSTALLATION (EARTH-LINED)

1. REFER TO APPROVED PLANS FOR LOCATION, EXTENT, AND CONSTRUCTION DETAILS. IF THERE ARE QUESTIONS OR PROBLEMS WITH THE LOCATION, EXTENT, OR METHOD OF INSTALLATION, CONTACT THE ENGINEER OR RESPONSIBLE ON-SITE OFFICER FOR ASSISTANCE.

2. CLEAR THE LOCATION FOR THE CATCH DRAIN, CLEARING ONLY WHAT IS NEEDED TO PROVIDE ACCESS FOR PERSONNEL AND EQUIPMENT FOR INSTALLATION.

3. REMOVE ROOTS, STUMPS, AND OTHER DEBRIS AND DISPOSE OF THEM PROPERLY. DO NOT USE DEBRIS TO BUILD THE BANK.

4. GRADE THE DRAIN TO THE SPECIFIED SLOPE AND FORM THE ASSOCIATED EMBANKMENT WITH COMPACTED FILL. NOTE THAT THE DRAIN INVERT MUST FALL 10cm EVERY 10m FOR EACH 1% OF REQUIRED CHANNEL GRADIENT.

5. ENSURE THE SIDES OF THE CUT DRAIN ARE NO STEEPER THAN A 1.5:1 (H:V) SLOPE AND THE EMBANKMENT FILL SLOPES NO STEEPER THAN 2:1.

6. ENSURE THE COMPLETED DRAIN HAS SUFFICIENT DEEP (AS SPECIFIED FOR THE TYPE OF DRAIN) MEASURED FROM THE DRAIN INVERT TO THE TOP OF THE EMBANKMENT.

7. ENSURE THE DRAIN HAS A CONSTANT FALL IN THE DESIRED DIRECTION FREE OF OBSTRUCTIONS.

8. ENSURE THE DRAIN DISCHARGES TO A STABLE OUTLET SUCH THAT SOIL EROSION WILL BE PREVENTED FROM OCCURRING. SPECIFICALLY, ENSURE THE DRAIN DOES NOT DISCHARGE TO AN UNSTABLE FILL SLOPE.

MAINTENANCE

1. INSPECT ALL CATCH DRAINS AT LEAST WEEKLY AND AFTER RUNOFF-PRODUCING STORM EVENTS AND REPAIR ANY SLUMPS, BANK DAMAGE, OR LOSS OF FREEBOARD.

2. ENSURE FILL MATERIAL OR SEDIMENT IS NOT PARTIALLY BLOCKING THE DRAIN. WHERE NECESSARY, REMOVE ANY DEPOSITED MATERIAL TO ALLOW FREE DRAINAGE.

3. DISPOSE OF ANY SEDIMENT OR FILL IN A MANNER THAT WILL NOT CREATE AN EROSION OR POLLUTION HAZARD.

REMOVAL

1. WHEN THE SOIL DISTURBANCE ABOVE THE CATCH DRAIN IS FINISHED AND THE AREA IS STABILISED, THE TEMPORARY DRAIN AND ANY ASSOCIATED BANKS SHOULD BE REMOVED, UNLESS IT IS TO REMAIN AS A PERMANENT DRAINAGE FEATURE.

2. DISPOSE OF ANY SEDIMENT OR EARTH IN A MANNER THAT WILL NOT CREATE AN EROSION OR POLLUTION HAZARD.

3. GRADE THE AREA AND SMOOTH IT OUT IN PREPARATION FOR STABILISATION.

4. STABILISE THE AREA BY GRASSING OR AS SPECIFIED WITHIN THE APPROVED SITE REHABILITATION PLAN.

Drawn:	Date:		
GMW	Dec-09	Catch Drains - Earth Lined	CD-02

Catchments & Creeks Pty Ltd

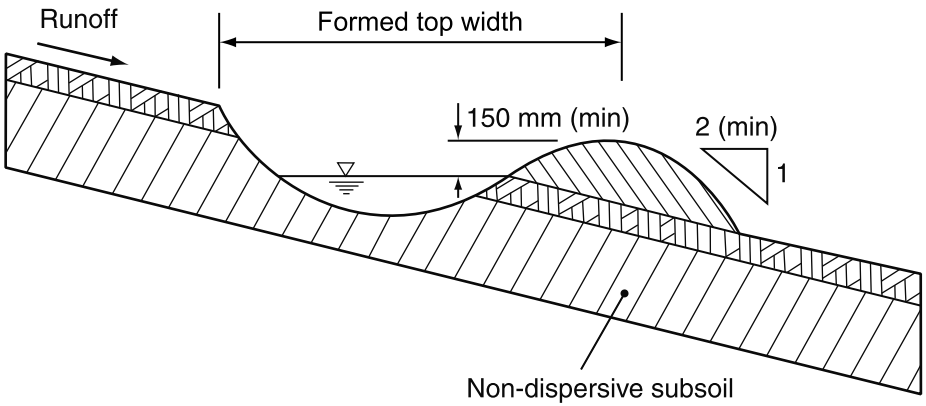

(a) Parabolic catch drain with down-slope bank

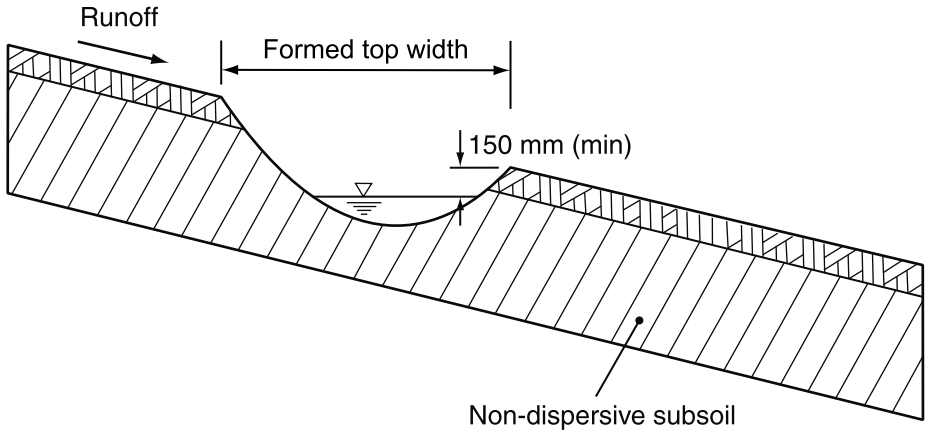

(c) Parabolic catch drain without bank

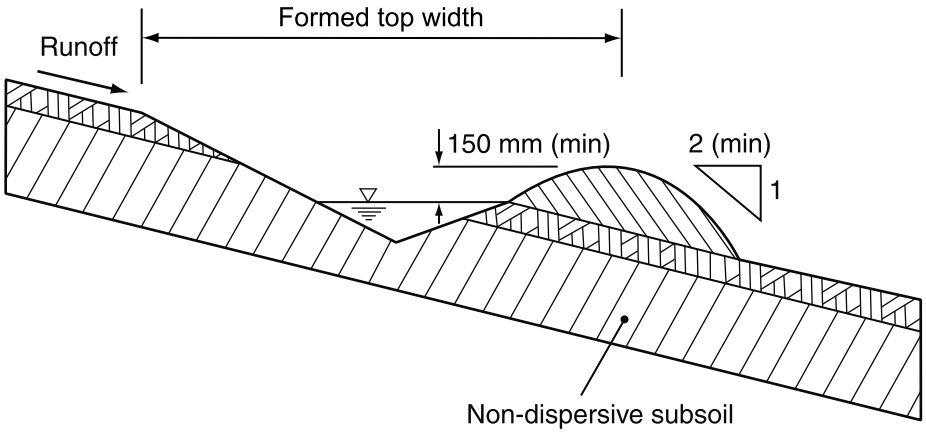

(b) Triangular V-drain with down-slope bank

Constructed dimensions of parabolic catch drains		
Drain type	Formed top width with or without bank	Formed depth with or without bank
Type-A	1.6 m	0.30 m
Type-B	2.4 m	0.45 m
Type-C	3.6 m	0.65 m

Constructed dimensions of triangular V-drains		
Drain type	Formed top width with or without bank	Formed depth with or without bank
Type-AV	2.0 m	0.30 m
Type-BV	2.7 m	0.45 m
Type-CV	3.9 m	0.65 m

NOT TO SCALE

Drawn:	Date:		
GMW	Dec-09	Catch Drains	CD-01

Catchments & Creeks Pty Ltd

INSTALLATION

1. REFER TO APPROVED PLANS FOR LOCATION, EXTENT, AND CONSTRUCTION DETAILS. IF THERE ARE QUESTIONS OR PROBLEMS WITH THE LOCATION, EXTENT, OR METHOD OF INSTALLATION, CONTACT THE ENGINEER OR RESPONSIBLE ON-SITE OFFICER FOR ASSISTANCE.

2. CLEAR THE LOCATION FOR THE BERM, CLEARING ONLY THE AREA THAT IS NEEDED TO PROVIDE ACCESS FOR PERSONNEL AND EQUIPMENT.

3. REMOVE ROOTS, STUMPS, AND OTHER DEBRIS AND DISPOSE OF THEM PROPERLY.

4. FORM THE BERM FROM THE MATERIAL, AND TO THE DIMENSION SPECIFIED IN THE APPROVED PLANS.

5. IF FORMED FROM SANDBAGS, THEN ENSURE THE BAGS ARE TIGHTLY PACKED SUCH THAT WATER LEAKAGE THROUGH THE BAGS IS MINIMISED.

6. CHECK THE ALIGNMENT OF THE BERM TO ENSURE POSITIVE DRAINAGE IN THE DESIRED DIRECTION.

7. ENSURE THE BERM DISCHARGES TO A STABLE OUTLET.

8. ENSURE THE BERM DOES NOT DISCHARGE TO AN UNSTABLE FILL SLOPE.

MAINTENANCE

1. INSPECT FLOW CONTROL BERMS AT LEAST WEEKLY AND AFTER RUNOFF-PRODUCING RAINFALL.

2. INSPECT THE BERM FOR ANY SLUMPS, WHEEL TRACK DAMAGE OR LOSS OF FREEBOARD. MAKE REPAIRS AS NECESSARY.

3. CHECK THAT FILL MATERIAL OR SEDIMENT HAS NOT PARTIALLY BLOCKED THE DRAINAGE PATH UP-SLOPE OF THE EMBANKMENT. WHERE NECESSARY, REMOVE ANY DEPOSITED MATERIAL TO ALLOW FREE DRAINAGE.

4. DISPOSE OF ANY COLLECTED SEDIMENT OR FILL IN A MANNER THAT WILL NOT CREATE AN EROSION OR POLLUTION HAZARD.

5. REPAIR ANY PLACES IN THE BERM THAT ARE WEAKENED OR IN RISK OF FAILURE.

REMOVAL

1. WHEN THE SOIL DISTURBANCE ABOVE THE BANK IS FINISHED AND THE AREA IS STABILISED, THE FLOW CONTROL BERM SHOULD BE REMOVED, UNLESS IT IS TO REMAIN AS A PERMANENT DRAINAGE FEATURE.

2. DISPOSE OF ANY SEDIMENT OR EARTH IN A MANNER THAT WILL NOT CREATE AN EROSION OR POLLUTION HAZARD.
3. GRADE THE AREA AND SMOOTH IT OUT IN PREPARATION FOR STABILISATION.

4. STABILISE THE AREA BY GRASSING OR AS SPECIFIED IN THE APPROVED PLAN.

Table 1 - Recommended dimensions of flow control berms

Parameter	Earth banks	Vegetated banks	Compost berms	Sandbag berms
Height (min)	500 mm	500 mm	300 mm	N/A
Top width (min)	500 mm	500 mm	100 mm	N/A
Base width (min)	2500 mm	2500 mm	600 mm	N/A
Side slope (max)	2:1 (H:V)	2:1 (H:V)	1:1 (H:V)	N/A
Freeboard	300 mm	150 mm	100 mm	50 mm

Drawn:	Date:		
GMW	Dec-09	Flow Control Berms	CB-01

Catchments & Creeks Pty Ltd

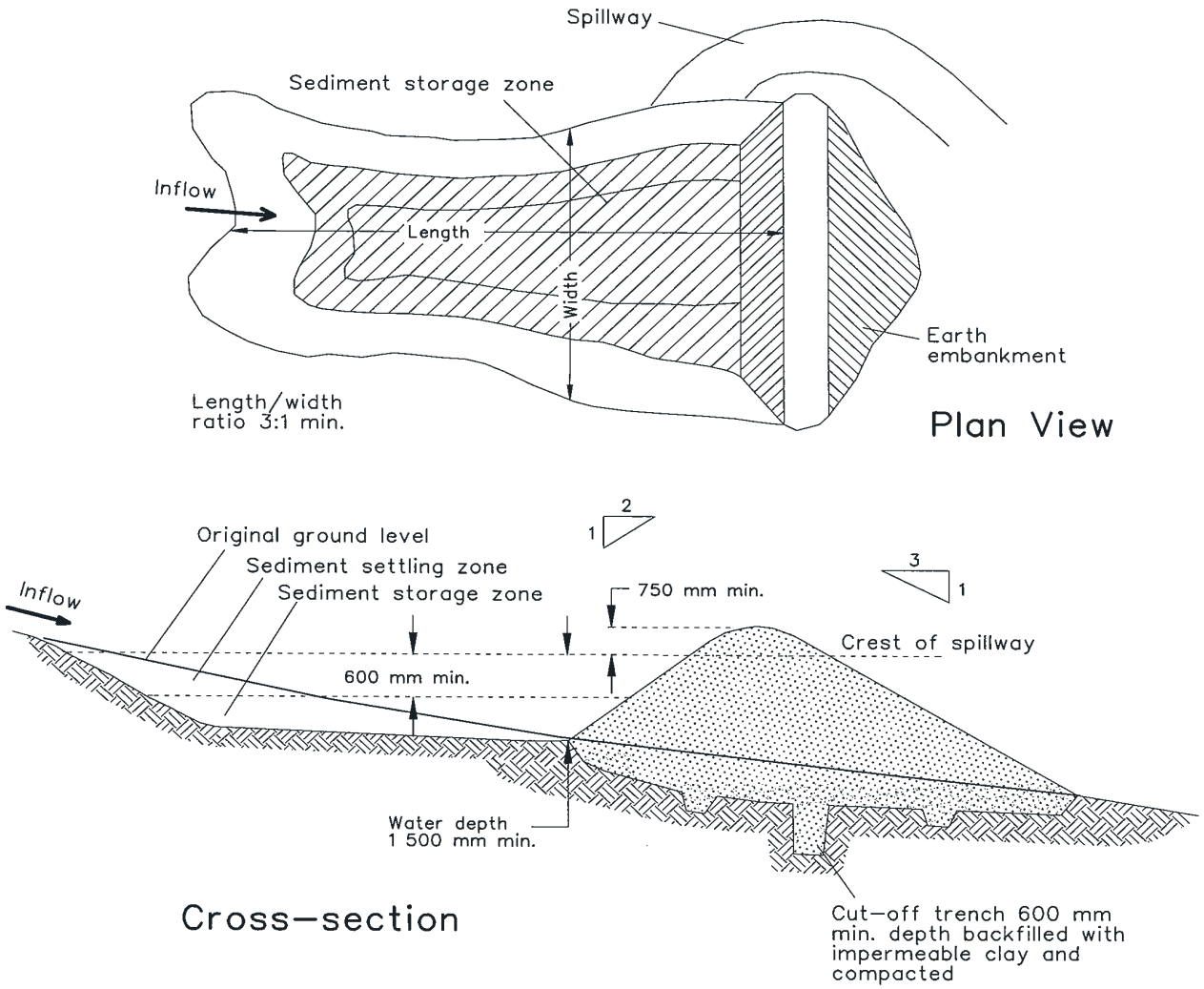

Construction Notes

1. Remove all vegetation and topsoil from under the dam wall and from within the storage area.
2. Construct a cut-off trench 500 mm deep and 1,200 mm wide along the centreline of the embankment extending to a point on the gully wall level with the riser crest.
3. Maintain the trench free of water and recompact the materials with equipment as specified in the SWMP to 95 per cent Standard Proctor Density.
4. Select fill following the SWMP that is free of roots, wood, rock, large stone or foreign material.
5. Prepare the site under the embankment by ripping to at least 100 mm to help bond compacted fill to the existing substrate.
6. Spread the fill in 100 mm to 150 mm layers and compact it at optimum moisture content following the SWMP.
7. Construct the emergency spillway.
8. Rehabilitate the structure following the SWMP.

EARTH BASIN - WET

(APPLIES TO 'TYPE D' AND 'TYPE F' SOILS ONLY)

SD 6-4