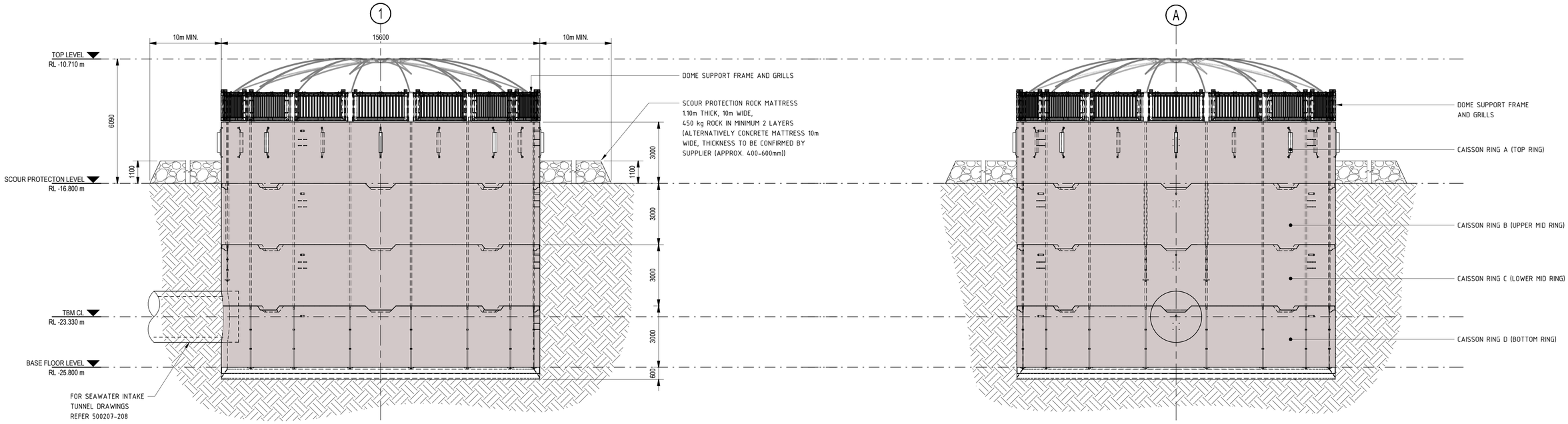

INTAKE ELEVATION A
SCALE 1 : 100

INTAKE ELEVATION B
SCALE 1 : 100

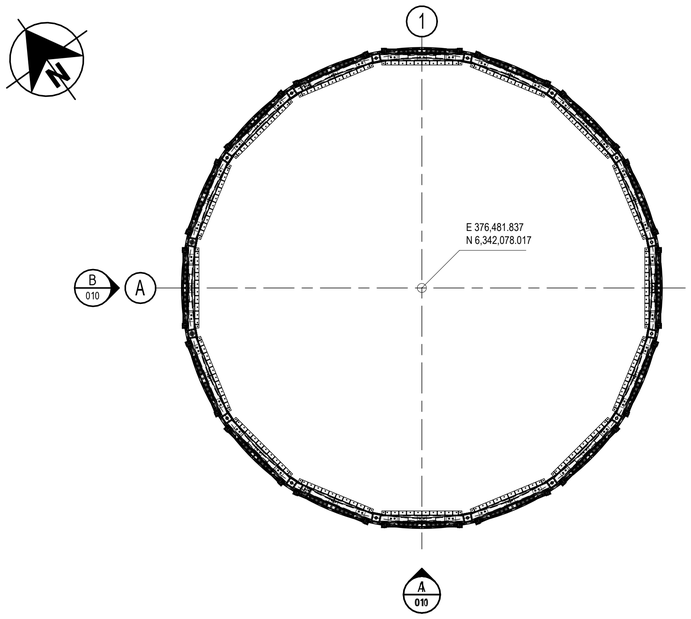

INTAKE PLAN
SCALE 1 : 100

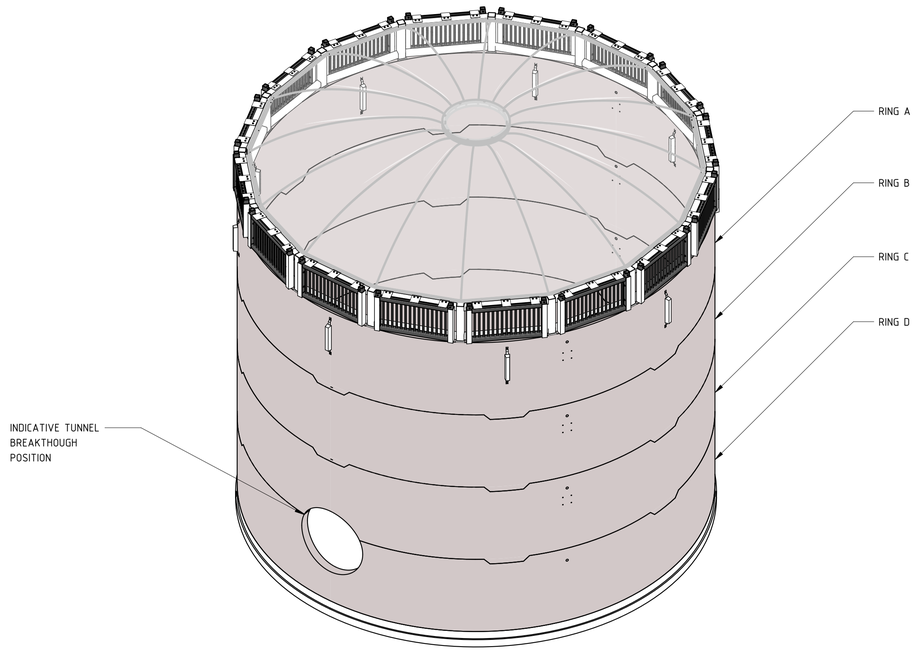

INTAKE 3D VIEW
NOT TO SCALE

0 1000 2000 3000 4000 5000mm
SCALE 1:100 AT ORIGINAL SIZE

PRELIMINARY ISSUE
NOT FOR CONSTRUCTION

No.	REVISION DETAILS	DWN	DATE
0A	PLANNING ISSUE	AS	06.02.25

CONSULTANT DETAILS:
JOHN HOLLAND
Level 3, 65 Pirrama Road
Pyrmont 2009, New South Wales
(02) 9552 4288
johnholland.com.au

GHD
www.ghd.com
GHD Tower, Level 3 24 Honeysuckle Drive,
Newcastle NSW 2300 Australia
PO Box 5403 Hunter Rgn Mail Cent. NSW 2310
T 61 2 4979 9999 F 61 2 9475 0725
E ntlmail@ghd.com W www.ghd.com

CONSULT. REFERENCE No. 12585829

HUNTER WATER

DESIGNED: CV	DATE: 22.01.25	COMPANY: GHD PTY LTD	TITLE: CS1135 BELMONT DESALINATION PLANT WT - BES SEAWATER INTAKE STRUCTURE GENERAL ARRANGEMENT - SHEET 1
DRAWN: AS	DATE: 22.01.25	COMPANY: GHD PTY LTD	
CHECKED: SH	DATE: 07.02.25	COMPANY: GHD PTY LTD	
APPROVED: WB	DATE: 07.02.25	COMPANY: GHD PTY LTD	

SIZE:	SCALE:	INDEX No.	DRAWING No.	SHEET	REV No.
A1	AS SHOWN	87132	500729	010	0A

Plot Date 2/6/2025 2:17:56 PM Cad File No - Autodesk Docs://Belmont Desalination Project/CS1135-GHD-SD-SB-MOD-ST-00030_OCEAN INTAKE STRUCTURE.rvt