ABN 37 002 648 615

2/20 Balfour Road
Rose Bay NSW 2029
[p] 0408 627 908
[e] r.seidman@iaccessconsultants.com

Job No: IAC-847

Wednesday, 13 June 2018

BLACKETT MAGUIRE + GOLDSMITH
PO BOX 167,
BROADWAY NSW 2007

Reference: **ACCESS REPORT – STATE SIGNIFICANT DEVELOPMENT APPLICATION (SSDA) MUDGEE HOSPITAL**

Attention: Mr Adam Durnford

Dear Adam

Thank you for inviting iAccess Consultants to undertake this access assessment of the State Significant Development Application proposal for the redevelopment of Mudgee Hospital.

This access report has been structured in accordance with the provisions of the Disability (Access to Premises) Standard 2010 as well as the provisions of the relevant Australian Standards.

Please feel free to contact us should you wish to discuss any aspect of this Access Report.

Yours sincerely,

RICHARD SEIDMAN

M.PropDev (UTS),
BArch (Hons) (UNSW),
ARB Reg No 4700,
ACAA Associate Member (No 330)

iAccess Consultants is a division of Seidman & Associates Pty Ltd ABN 37 002 648 615

This document contains Standards Australia Ltd copyrighted material that is distributed by SAI Global on Standards Australia Ltd's behalf. It may be reproduced in accordance with the terms of SAI Global Ltd's Licence 1107-c118-3. All licensed copies of this document must be obtained from the Licensee. Standards Australia Ltd's material is not for resale, reproduction or distribution in whole or in part without written permission from SAI Global Ltd: tel +61 2 8206 6355 or copyright@saiglobal.com

THIS PAGE HAS BEEN INTENTIONALLY LEFT BLANK

ACCESS REPORT
STATE SIGNIFICANT DEVELOPMENT APPLICATION (SSDA)

MUDGEE HOSPITAL
MEARES STREET
MUDGEE, NSW 2850

Prepared by

iAccess Consultants

A division of Seidman & Associates Pty Ltd

ABN 37 002 648 615

13 June 2018

Revision ***[B]***

DOCUMENT CONTROL

Project: Mudgee Hospital
Meares Street
Mudgee NSW 2850

Document Type: Access Report

Report Number: IAC-847

The following report register documents the development and issue of this and each subsequent report(s) undertaken by iAccess Consultants.

The technical and intellectual content contained herein remain the property of iAccess Consultants and have been prepared and may only be used for the development / buildings being the subject of this report.

Revision History:

Rev	Remarks	Issue Date
-	Schematic Design Access report prepared and issued to client	26 March 2018
A	State Significant Development Application Access report prepared and issued to client	15 May 2018
B	State Significant Development Application Access report updated based on revised architectural drawings and issued to client	13 June 2018

Richard Seidman
ARB Reg No 4700,
M.PropDev, BArch (Hons),
ACAA (Accredited Access Consultant 330)

iAccess Consultants is a division of Seidman & Associates Pty Ltd ABN 37 002 648 615

CONTENTS

1. EXECUTIVE SUMMARY 8

1.1. Site Plan 10

1.2. Building Classification 10

1.3. Exclusions from this Access Report 10

1.4. Performance Solutions 11

1.5. Access Declaration 11

1.6. NCC Clause D3.4 Concession 11

2. STATUTORY FRAMEWORK 14

2.1. Disability Discrimination Act 1992 14

2.2. Legislative Framework 14

2.3. Architectural Documentation 15

2.4. Access Report 15

3. ACCESS REPORT 16

3.1. Paths of Travel and Circulation 16

3.1.1. Accessible Paths of Travel 16

3.1.2. Setdown Areas 16

3.1.4. Grated Drains 21

3.1.5. Luminance Contrast of Pavement Finishes 22

3.1.6. Internal Accessible Paths of Travel and Circulation Spaces 22

3.1.7. Visual Indicators on Glazing 23

3.2. Carparking and Line Marking 26

3.2.1. General 26

3.3. Floor Finishes 28

3.3.1. Slip Resistance 28

3.3.2. Carpet 29

3.3.3. Floor transitions 30

3.3.4. Recessed Matting 30

3.4. Signage 31

3.4.1. Statutory Signage Requirements 31

3.5. Walkways, Ramps and Landings 38

3.5.1. General 38

3.6. Fire Stairs 39

3.7. Doorways and Circulation at Doorways 43

3.7.1. Clear Door Width 43

3.7.2. Luminance contrast 43

3.7.3. Successive Doorways 44

3.7.4. Door Controls ... 44
3.7.5. Circulation at doorways ... 44
3.7.6. Doors – Door Closers ... 48
3.8. Switches ... 50
3.8.1. General ... 50
3.8.2. Video Intercoms ... 50
3.8.3. Access Control ... 50
3.9. Sanitary Facilities ... 52
3.9.1. General ... 52
3.9.2. Accessible Sanitary Facilities Review ... 53
3.9.3. NCC Requirements ... 53
3.9.4. Wall Reinforcement ... 55
3.9.5. Shower Compartment ... 56
3.9.6. Handbasins ... 57
3.9.7. Toilet Roll Dispensers ... 57
3.9.8. Checklist of Accessible WCs ... 58
3.9.9. Ambulant Sanitary Facilities ... 59
3.10. Furniture ... 62
3.10.1. Counters ... 62
3.10.2. Seating ... 63
3.10.3. Waiting Areas ... 63
3.10.4. Lockers ... 63
3.10.5. Beverage Bays ... 64
3.10.6. Work Stations ... 65
3.11. Lighting Levels ... 66
3.11.1. General ... 66
3.12. Hearing Augmentation ... 67
3.12.1. General ... 67
3.13. Vertical Transport ... 69
3.13.1. General ... 69
3.13.2. Lift Car Dimensions ... 69
3.13.3. Call buttons ... 69
4 DISABILITY (ACCESS TO PREMISES) STANDARDS 2010- COMPLIANT REPORT ... 71
5 APPENDIX ... 79
Appendix 1 – Clause 16 & Clause 17 AS1428.4.2 1992 ... 79
Appendix 2 – Clause 8 AS1428.4.1 2009 ... 81

TABLE OF FIGURES

Figure 1 – Extract from Site Plan 8
Figure 2 – Extract from Google Maps 10
Figure 3 – Extract from Lower Ground Floor Plan 12
Figure 4 – Extract from Ground Floor Plan 13
Figure 5 – Extract from AS2890.6 outlining accessible requirements for parallel parking. 17
Figure 6 – Extract from AS1428.4.1:2009 – Figure 2.5B ... 17
Figure 7 – Fig. 23 of AS1428.1:2009 19
Figure 8 – Fig. 24A of AS1428.1:2009 20
Figure 9 – Fig. 24B of AS1428.1:2009 21
Figure 10 –Diag.7 DE-IG02 2013 – example of heel guard grates 22
Figure 11 – Extract from Clause 6.4 of AS1428.1:2009 22
Figure 12 – Fig.3 Section 6 AS1428.1 2009 23
Figure 13 – Fig.5 Section 6 AS1428.1 2009 23
Figure 14 – Fig.4 Section 6 AS1428.1 2009 23
Figure 15 – Diag.4 DE-IG02 2013 24
Figure 16 – Fig. 2.2 of AS2890.6 2009 26
Figure 17 – Fig. 3.1 of AS2890.6 2009 27
Figure 18 – Examples of carpet joints on an accessible path of travel 29
Figure 19 – diagrams indicating the acceptable tolerances between pavement finishes 30
Figure 20 – Recessed matting height tolerances 30
Figure 21 – Examples of Braille Tactile Signage from www.brailletactilesigns.com.au 33
Figure 22 – View range and lettering height (Source City of Sydney signage manual) 34
Figure 23 – Fig. D1 of AS1319:2994. 35
Figure 24 – Sketch of recommended signage icon size and spacing 36
Figure 25 – Extract from Australian Standard indicating acceptable view range for signage 37
Figure 26 – Figure 14 of AS1428.1:2009 38
Figure 27 – Extract from Ground Floor Plan 39
Figure 28 – Fig. 28 of AS1428.1:2009 40
Figure 29 – Diag.25A DE-IG02 2013 41
Figure 30 – Diag.25C DE-IG02 2013 41
Figure 31 – Fig.26A Section 11 AS1428.1 2009 42
Figure 32 – Fig.28 Section 11 AS1428.1 2009 42
Figure 33 – Fig.27B Section 11 AS1428.1 2009 42
Figure 34 – Fig.26C Section 11 AS1428.1 2009 42
Figure 35 – Fig. 35 Section 13 AS1428.1:2009 44
Figure 36 – Examples of compliant sliding door assemblies 45
Figure 37 – Examples of compliant sliding door assemblies 45
Figure 38 – Figure 31 of AS1428.1:2009 47
Figure 39 – Figure 32 of AS1428.1:2009 48
Figure 40 – Photograph of door threshold 49
Figure 41 – Fig.37 Section 14 of AS1428.1 2009 50
Figure 42 – Door release button) 50
Figure 43 – Installation height setout 51
Figure 44 – Installation Horizontal Setout 51
Figure 45 – Installation height setout 51
Figure 46 – Installation height setout access control 51
Figure 47 – Setout of video intercoms. 51
Figure 48 – Extract from Lower Ground Floor Plan 52
Figure 49 – Extract from Ground Floor Plan 53
Figure 50 – Fig.41 AS1428.1 2009 57
Figure 51 – Fig.53A AS1428.1 2009 60
Figure 52 – Fig.53B AS1428.1 2009 61
Figure 53 – Extract from Ground Floor Plan 62
Figure 54 – Fig.25 AS1428.2:1992 63
Figure 55 – Sketch by iAccess Consultants 64
Figure 56 - Image of non-compliant lift call button installation 70
Figure 57 -Image of compliant lift call button installation .. 70
Figure 58 – Fig.A1 AS35.12 1999 70

ABBREVIATIONS

The following abbreviations are employed in this Checklist:

ACAA	Association of Consultants in Access Australia
AS	Australian Standard
BCA	Building Code of Australia
NCC	National Construction Code
USAT	Unisex Accessible Toilet
AFFL	Above Finished Floor Level
TGSI	Tactile Ground Surface Indicator

1. EXECUTIVE SUMMARY

This access report has been prepared at the request of BM+G to provide access commentary on the State Significant Development Application documentation for the redevelopment works of the Mudgee Hospital, Mudgee NSW 2850.

The purpose of this access report is to highlight and review key accessible topics as they relate to design elements of the proposed redevelopment. The key accessible areas are mainly in relation to the requirements of the NCC Section D, Access and Egress and AS1428.1:2009 Design for access and mobility.

Development proposal

The Mudgee Hospital currently includes a series of buildings and carparking.

The scope of this access report is limited to the redevelopment works highlighted in the following plan extract:

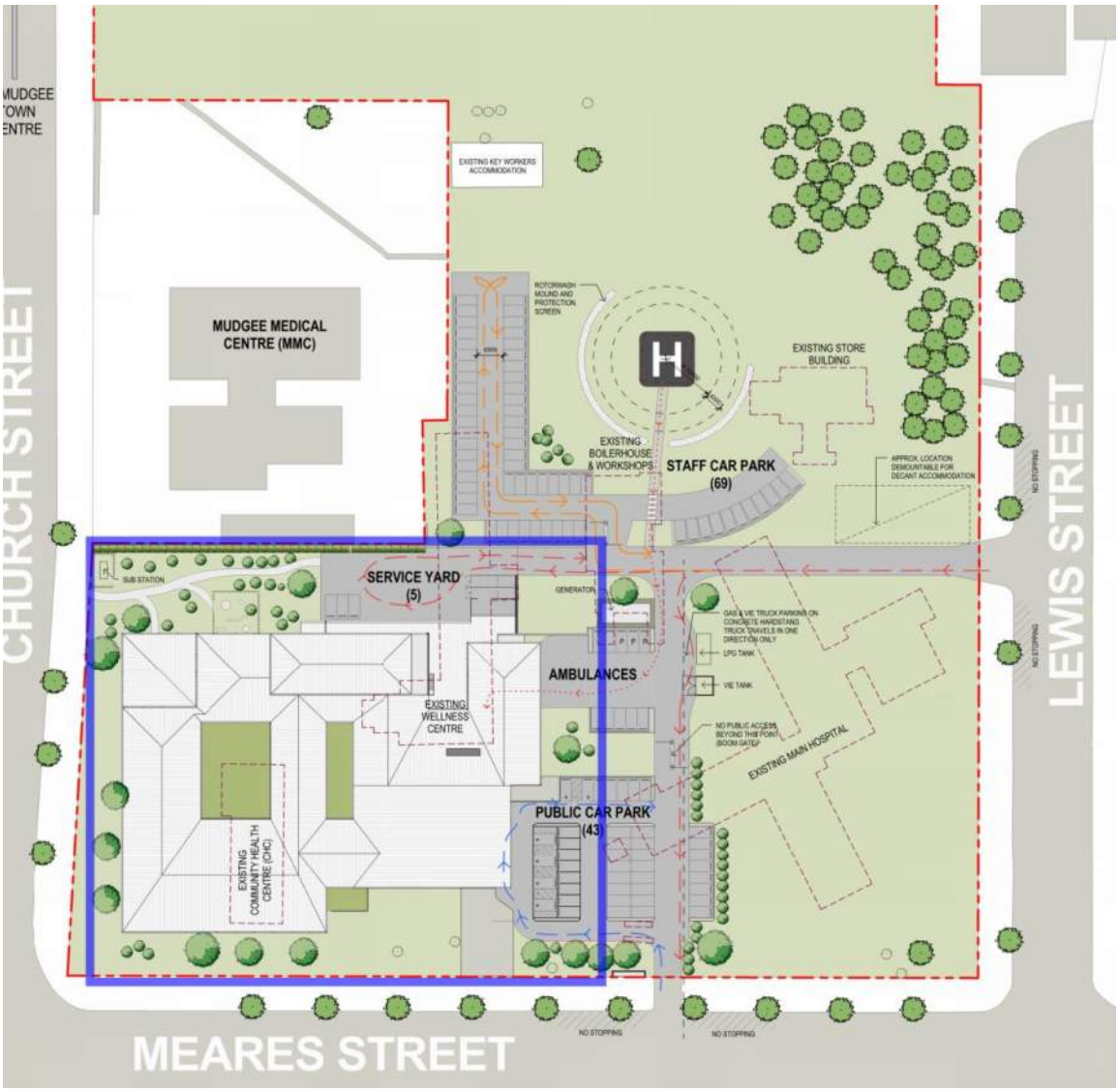

Figure 1 – Extract from Site Plan

The redevelopment works include the following:

Lower Ground Floor:

- Lobby/waiting
- Pharmacy
- Health information
- Pathology
- Back of House
- Staff Administration and Amenities
- Physiotherapy / occupational therapy
- Renal Dialysis
- Oral health
- Chemotherapy
- Therapy garden and outdoor courtyards

Ground Floor:

- Set down and entrance from parking area
- Front of house and concourse
- Emergency Department and emergency entrance
- Medical imaging
- Maternity
- Perioperative
- Sterilising services
- Maternity
- In-patient Unit

1.1. Site Plan

The Mudgee Hospital is located at Meares Street, Mudgee, NSW 2850.

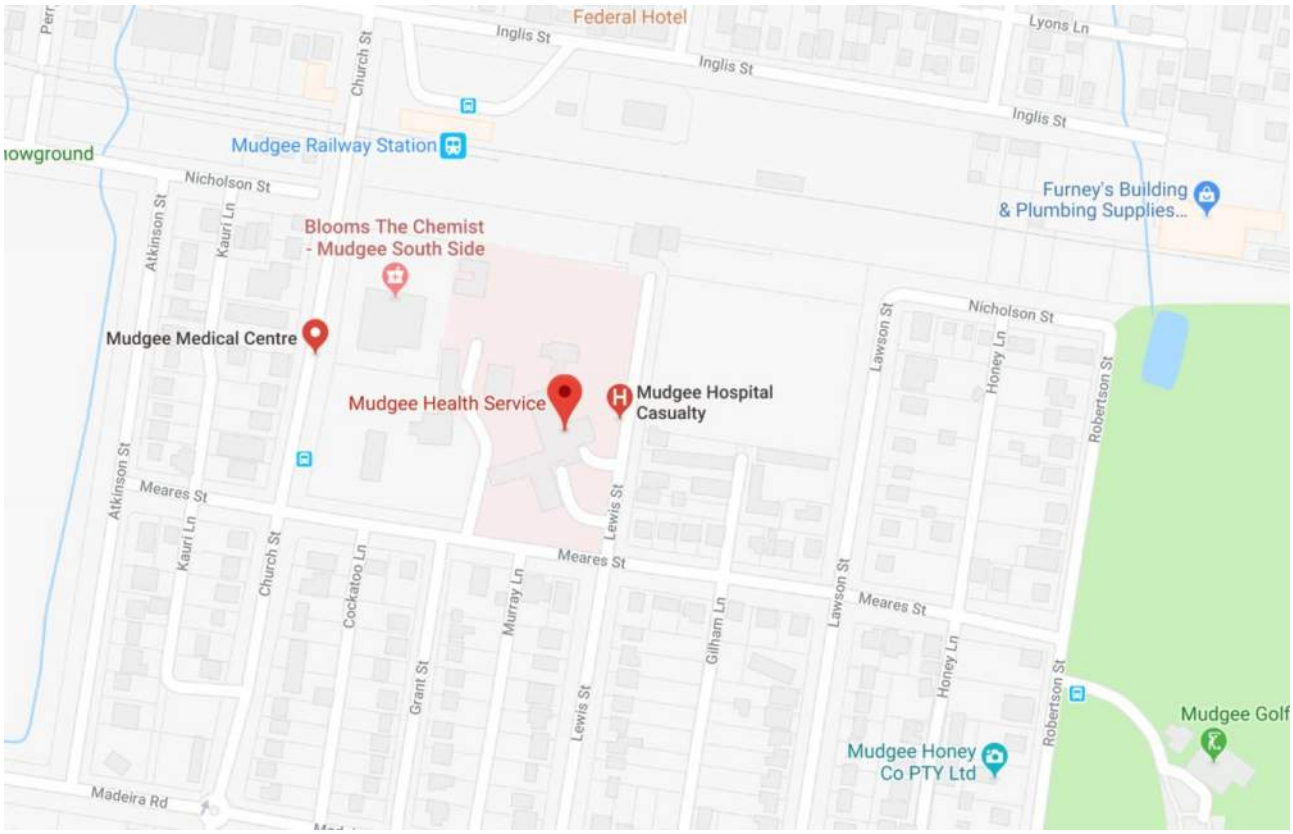

Figure 2 – Extract from Google Maps

1.2. Building Classification

The following Access Report has adopted the headings of the Disability (Access to Premises) Standard 2010. The Standard provides a framework for analysis when coupled with the technical provisions of the National Construction Code and the provisions of Australian Standards AS1428

Australian Standards provide certainty and direction to address accessibility compliance.

The NCC classification for this Development is:

Class 9a – a health-care building

1.3. Exclusions from this Access Report

The assessment discussed in this report is limited to the scope of works highlighted in the above Executive Summary and does not include existing areas within the site not affected by these works.

This report does also not address accessibility of any Early Works undertaken as part of any decanting required to be undertaken for the implementation of the main works.

The scope of the decanting works will need to be provided so that an accessibility assessment can be undertaken.

1.4. Performance Solutions

The proposed design presently does not rely upon any performance solutions.

1.5. Access Declaration

This report confirms that the provisions for compliance with the accessible requirements nominated in the Disability (Access to Premises – Building) Standard 2010 where possible have been incorporated into the design proposed by this State Significant Development Application documentation.

1.6. NCC Clause D3.4 Concession

The NCC Clause D3.4 notes a concession for accessibility to particular areas/rooms:

> *(a) An area where access would be inappropriate because of the particular purpose for which the area is used.*
>
> *(b) An area that would pose a health or safety risk for people with a disability.*
>
> *(c) Any path of travel providing access only to an area exempted by (a) or (b).*

The new hospital building has several rooms of which the NCC D3.4 concession applies:

- Plant rooms
- Store rooms
- Clean and dirty utility rooms
- Equipment stores
- Cleaners areas
- Rooms where access is only permitted by specialist technicians.

The following plan extracts highlight these areas:

Figure 3 – Extract from Lower Ground Floor Plan

Figure 4 – Extract from Ground Floor Plan

2. STATUTORY FRAMEWORK

2.1. Disability Discrimination Act 1992

Section 23 of the Disability Discrimination Act 1992 states:

It is unlawful for a person to discriminate against another person on the ground of the other person's disability:

a) by refusing to allow the other person access to, or the use of, any premises that the public or a section of the public is entitled or allowed to enter or use (whether for payment or not); or

b) in the terms or conditions on which the first-mentioned person is prepared to allow the other person access to, or the use of, any such premises; or

c) in relation to the provision of means of access to such premises; or

d) by refusing to allow the other person the use of any facilities in such premises that the public or a section of the public is entitled or allowed to use (whether for payment or not); or

e) in the terms or conditions on which the first-mentioned person is prepared to allow the other person the use of any such facilities; or

f) by requiring the other person to leave such premises or cease to use such facilities.

The Disability Discrimination Act 1992 is complaints based legislation and the Commissioner once having heard and assessed the level of discrimination may issue orders to rectify.

2.2. Legislative Framework

The legislation addressing accessibility is documented in the following Act, Code and Standards:

- Disability Discrimination Act 1992
- Disability (Access to Premises - Buildings) Standards 2010 (DDA 1992)
- National Construction Code (BCA 2016)
- AS1428.1:2009 Design for access and mobility - General requirements for access - New building work
- AS1428.2:1992 Design for access and mobility - Enhanced and additional requirements - Buildings and facilities
- AS1428.4.1:2009 Design for access and mobility - Means to assist the orientation of people with vision impairment - Tactile ground surface indicators
- AS1428.5:2010 Design for access and mobility - Communication for people who are deaf or hearing impaired
- AS1680.2.1:2008 Interior and workplace lighting - Specific applications - Circulation spaces and other general areas
- AS1735.12:1999 Lifts, escalators and moving walks - Facilities for persons with disabilities
- AS2890.6:2009 Parking facilities - Off-street parking for people with disabilities
- HB198:2014 Guide to the specification and testing of slip resistance of pedestrian surfaces

2.3. Architectural Documentation

This Access report references the following architectural documentation prepared by Silver Thomas Hanley Architects.

A-1000 008	Overall Ground Floor Plan
A-1000 009	Overall Lower Ground Floor Plan
A-1001 A	Site Plan
A-2201 B	Ground Floor Plan
A-2202 B	Lower Ground Floor Plan

2.4. Access Report

The Access Report following has adopted the headings of the Disability (Access to Premises) Standard 2010. The Standard provides a framework for analysis and when coupled with the technical provisions of the Building Code of Australia and the provisions of Australian Standards AS1428

Australian Standards provide certainty and direction to address accessibility compliance.

3. ACCESS REPORT

3.1. Paths of Travel and Circulation

NCC Reference:	D3.2 Access to buildings
	D3.3 Parts of buildings to be accessible
Australian Standard Reference:	Clause 6 (Continuous Accessible Paths of Travel) of AS1428.1 2009
	AS 1428.4.1 2009 Design for access and mobility - Means to assist the orientation of people with vision impairment

3.1.1. Accessible Paths of Travel

The site plan indicates a path of travel from the Meares Street frontage to the new principal pedestrian entrance to this hospital extension. Details as to the gradients, paving materials or other elements located along the path of travel are unknown at this stage.

A continuous accessible path of travel to accessible facilities will need to be provided to enable people to *'approach the building from the road boundary'* so that they can *'access work and public spaces, accommodation and facilities for personal* hygiene' in accordance with the requirements of ***DP1*** of the National Construction Code 2016.

The NCC Clause D3.2(a) identifies that

An accessway must be provided to a building required to be accessible—

(i) from the main points of a pedestrian entry at the allotment boundary; and

(ii) from another accessible building connected by a pedestrian link; and

(iii) from any required accessible carparking space on the allotment.

The new building entrance is via a carpark on site. Access to the carpark area is via Meares or Lewis Street.

The design proposes the location for accessible parking spaces adjacent to the principal pedestrian entrance.

The plan indicates a set down area for the new main pedestrian entrance.

3.1.2. Setdown Areas

The plan indicates a set down area adjacent to the principal pedestrian entrance. The detailing of the set down area is unknown at this stage.

If a kerb is provided separating the drop-off area from the pavement, a compliant kerb ramp will need to be provided. The detailing of the parallel set down zone will need to satisfy the provisions of AS2890.6:2009. The sketches following indicate an extract from the Australian standard as to how to detail such set down areas.

Where the pedestrian pathway and the driveway is at the same grade it will be necessary to achieve a 30% luminous contrast between the walkway and the driveway. Details of the paving materials, colour and texture will need to be provided as part of the detailed architectural documentation.

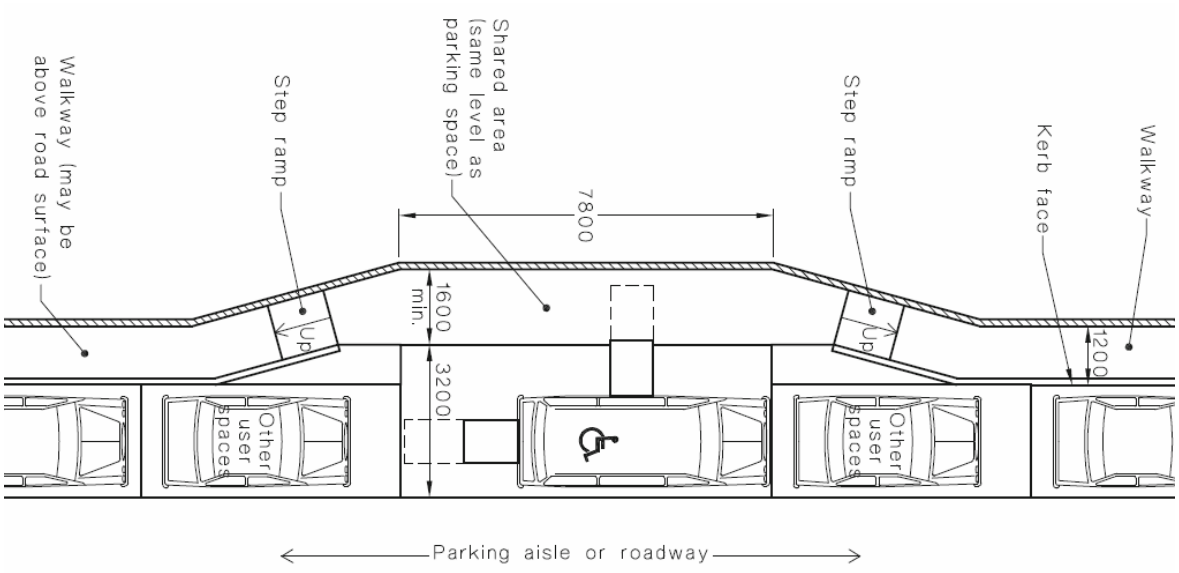

Figure 5 – Extract from AS2890.6 outlining accessible requirements for parallel parking.

If the set down is flush with the pavement, tactile indicators and bollards are required as per Figure 2.5B of AS1428.4.1:2009:

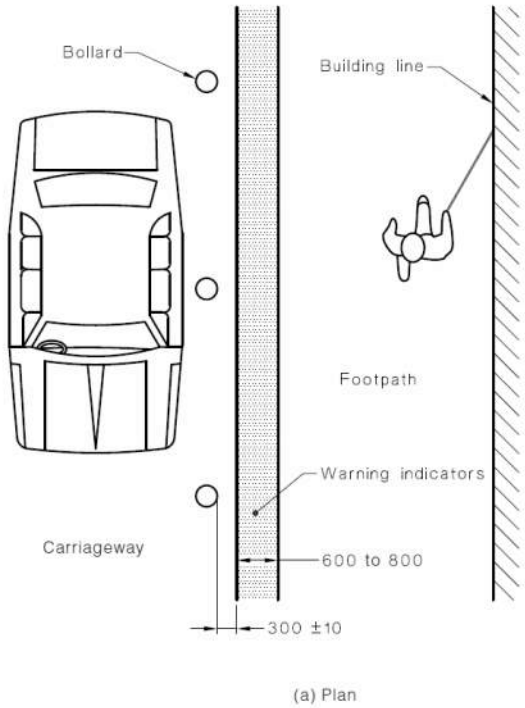

Figure 6 – Extract from AS1428.4.1:2009 – Figure 2.5B

3.1.3. Kerbs

Details of the landscaping and parking will need to be provided at a later stage.

The following information on Kerbs is provided for reference:

The requirements for kerb ramps are identified at Clause 10.7 of AS1428.1:2009:

Kerb ramps shall have—

(a) a maximum rise of 190 mm;

(b) a length not greater than 1520 mm; and

(c) a gradient not steeper than 1 in 8, located within or attached to a kerb.

The profile of ramps shall comply with the following:

(i) The design and construction of kerb ramps shall be as shown in Figures 24(A), 24(B) and 24(C).

(ii) The sloping sides of a kerb ramp shall be tapered or splayed as indicated in Figures 24(A) and (24(B).

(iii) The angle at the base of the kerb ramp shall be a minimum of 166° as shown in Figures 24(A) and 24(B).

The slip resistance of the ramps shall be in accordance with Table 3B of HB198:2014, which identifies a rating of P5/R10 for a ramp steeper than 1:14.

The following relevant extracts from the Standard are referenced below.

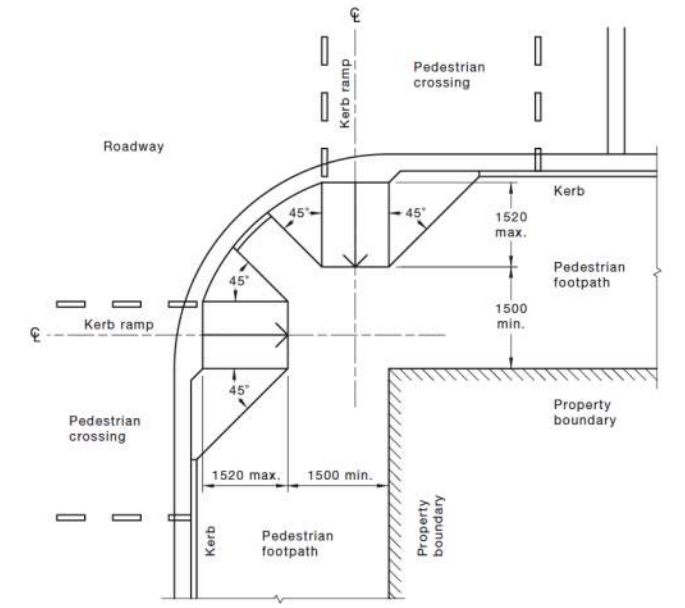

NOTES:

1 Centre-line of kerb ramps and pedestrian refuges shall align across the road or vehicular driveway within the building/property allotment.

2 Top and bottom of kerb ramps shall be aligned at 90° to path of travel.

3 Top and bottom of kerb ramps shall have a sharp gradient transition.

4 For requirements for tactile ground surface indicators see AS 1428.4.1.

5 For requirements for pedestrian lights and push-button assemblies see AS 1742.14.

(a) 90° road intersection

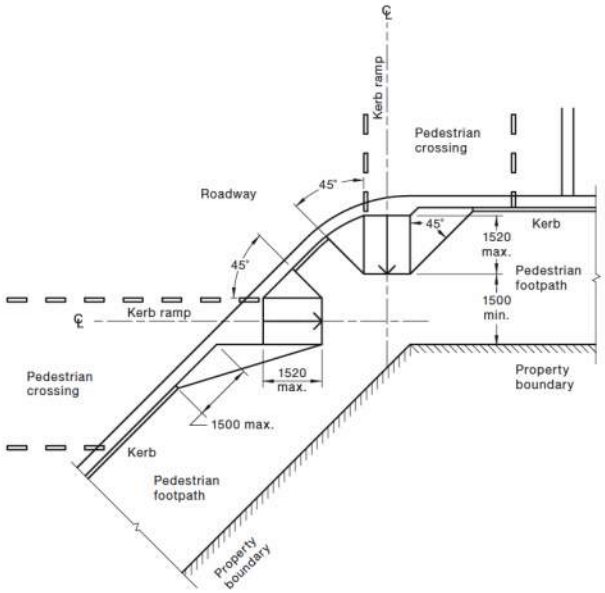

NOTES:

1 Centre-line of kerb ramps and pedestrian refuges shall align across the road or vehicular driveway within the building/property allotment.

2 Top and bottom of kerb ramps shall have a sharp gradient transition.

3 For requirements for tactile ground surface indicators see AS 1428.4.1.

4 For requirements for pedestrian lights and push-button assemblies see AS 1742.14.

(b) 45° road intersection

Figure 7 – Fig. 23 of AS1428.1:2009

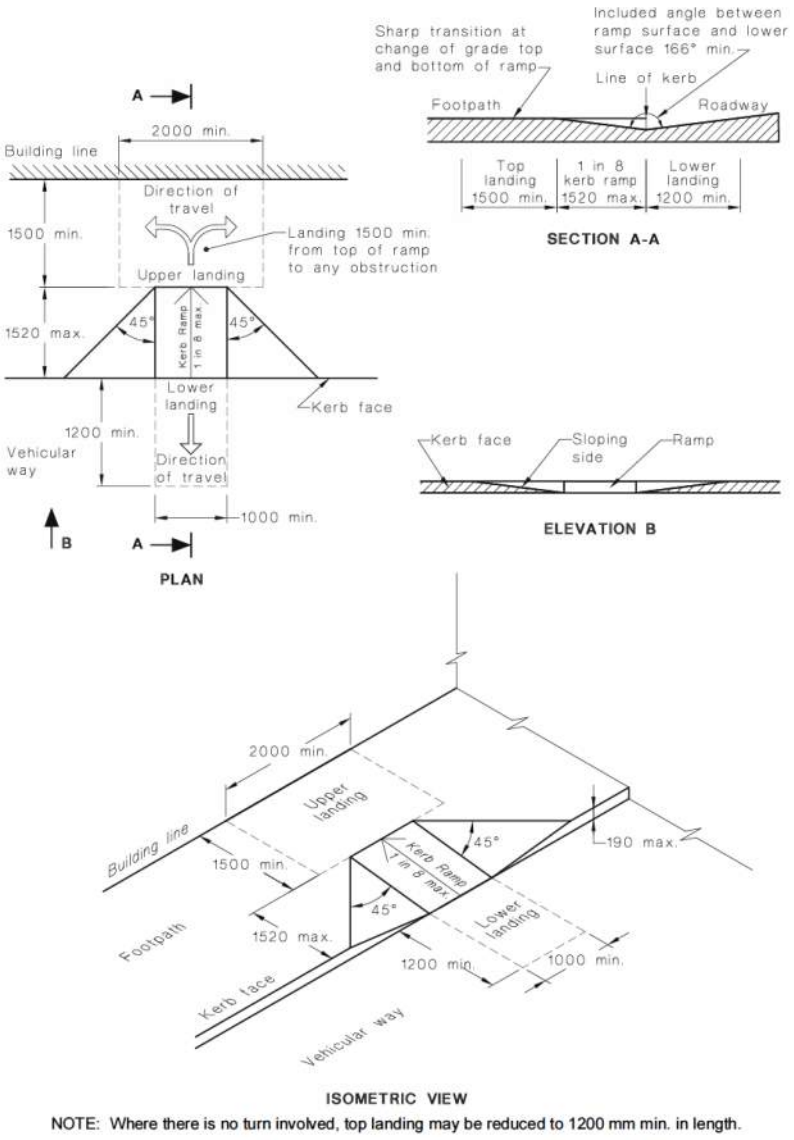

Figure 8 – Fig. 24A of AS1428.1:2009

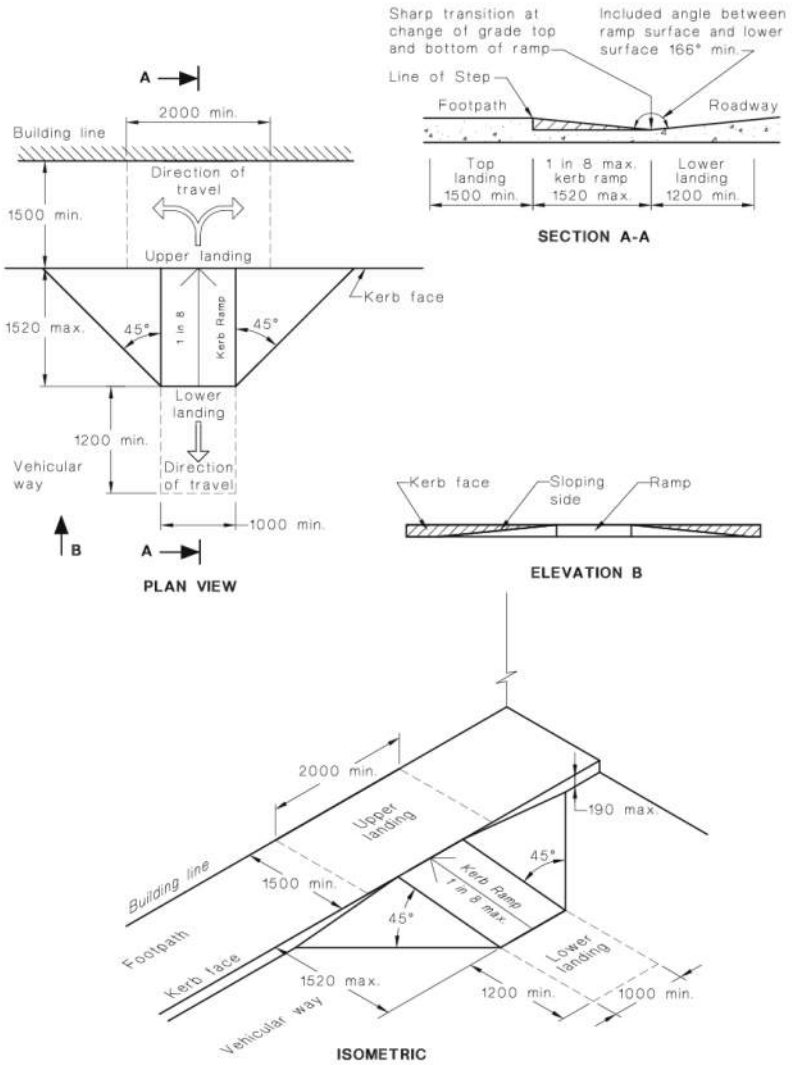

Figure 9 – Fig. 24B of AS1428.1:2009

The slip resistance of the surface of the kerb ramps will need to be P5 or R12 to satisfy the requirements of NCC table D2.14.

The lighting level along path of travels will need to achieve a minimum level of 150lx as noted at Clause 19 of AS1428.2:1992 or the minimum lighting levels noted at AS1680.2.1:2008.

3.1.4. Grated Drains

Any grated drains located within the external paths of travel will need to be fitted with compliant heel guard grates (Clause 7.5).

> ***7.5 Grates***
>
> *Grates shall comply with the following:*
>
> *(a) Circular openings shall be not greater than 13 mm in diameter.*
>
> *(b) Slotted openings shall be not greater than 13 mm wide and be oriented so that the long dimension is transverse to the dominant direction of travel.*

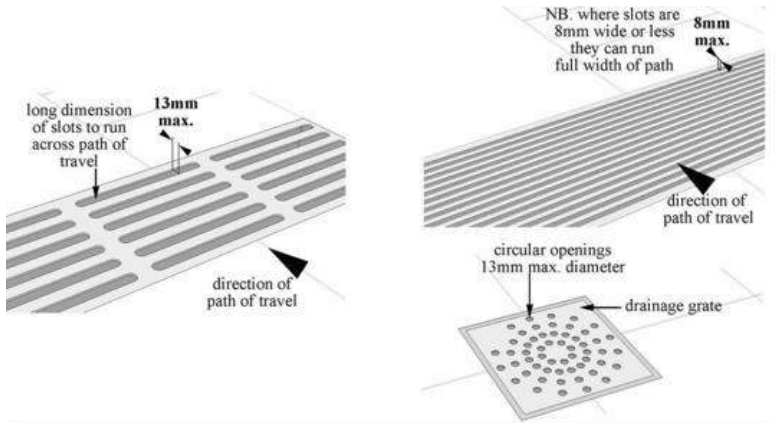

Figure 10 –Diag.7 DE-IG02 2013 – example of heel guard grates

3.1.5. Luminance Contrast of Pavement Finishes

Where there is alignment between the pavement and driveway, as a minimum, the luminance contrast between the finishes will need to be a minimum of 30%.

3.1.6. Internal Accessible Paths of Travel and Circulation Spaces.

Where the length of the Paths of Travel is longer than 20m, a 1800 x 2000mm passing bay is required to be provided in accordance with the provisions of Clause 6.4 of AS1428.1:2009.

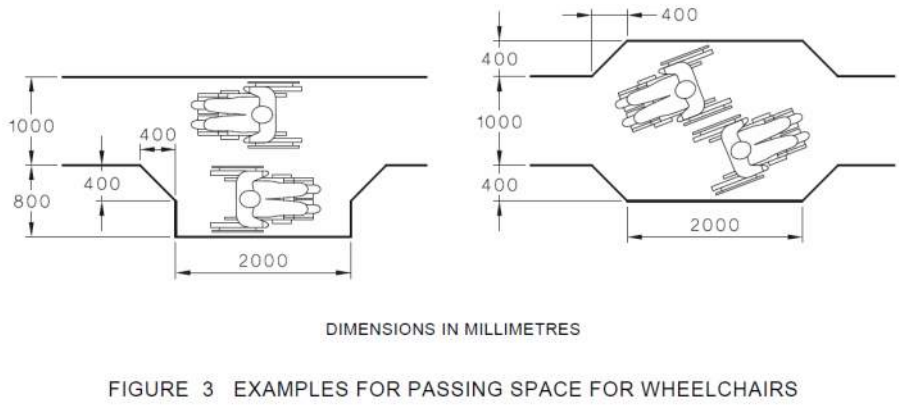

Figure 11 – Extract from Clause 6.4 of AS1428.1:2009

A minimum pathway of 1m width is required throughout all accessible areas.

The design also requires locations where a wheelchair user can make a 180deg turn (1540 x 2070mm) at corridor/pathway ends in accordance with the provisions of Fig. 5, Clause 6 of AS1428.1 2009 as well as 1500x1500 circulation zones where the path of travel changes direction.

Specific attention is directed to be enclosed Beverage Bay locations where the resultant area between the edge of the counter and the wall opposite is often less than the required 1540 mm clear distance.

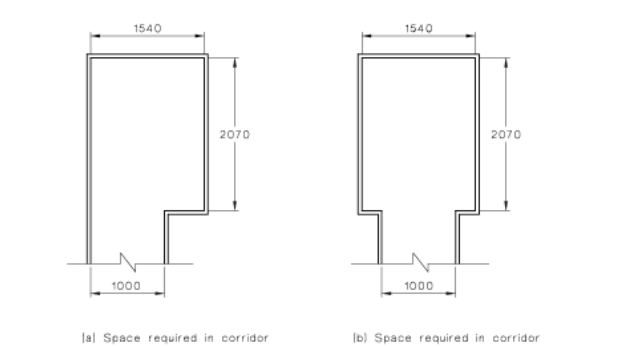

Figure 12 – Fig.3 Section 6 AS1428.1 2009

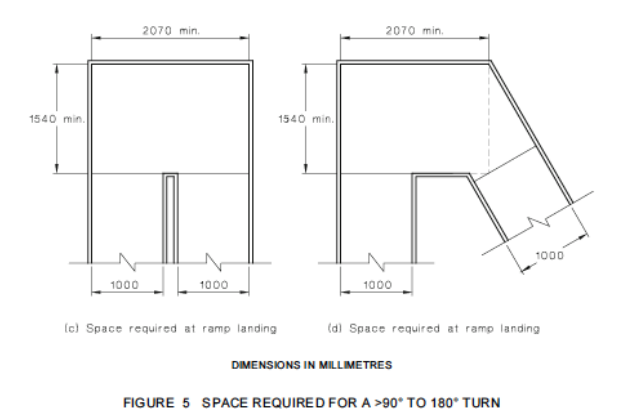

Figure 13 – Fig.5 Section 6 AS1428.1 2009

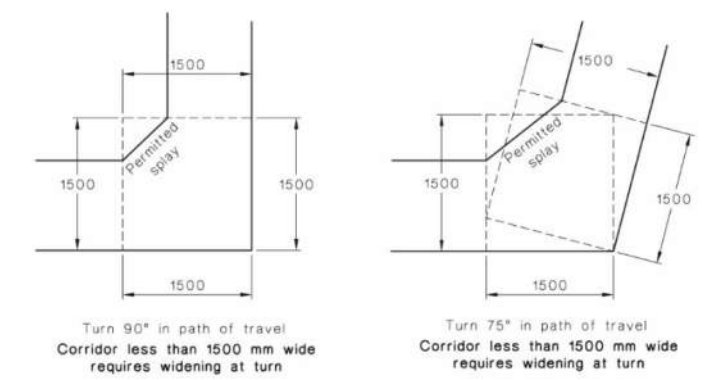

Figure 14 – Fig.4 Section 6 AS1428.1 2009

Upon our review of the State Significant Development Application documentation, the internal paths of travel reflect compliant circulation zones as per the above requirements. This will need to be reassessed once furniture plans are provided.

3.1.7. Visual Indicators on Glazing

Where full height glazing is proposed, visual indicators will need to be fixed to the glazing in accordance with Clause 6.6 of AS1428.1:2009.

> ***6.6 Visual indicators on glazing***
>
> *Where there is no chair rail, handrail or transom, all frameless or fully glazed doors, sidelights, including any glazing capable of being mistaken for a doorway or opening, shall be clearly marked for their full width with a solid and non-transparent contrasting line. The contrasting line shall be not less than 75 mm wide and shall extend across the full width of the glazing panel. The lower edge of the contrasting line shall be located between 900 mm and 1000 mm above the plane of the finished floor level.*
>
> *Any contrasting line on the glazing shall provide a minimum of 30% luminance contrast when viewed against the floor surface or surfaces within 2 m of the glazing on the opposite side.*

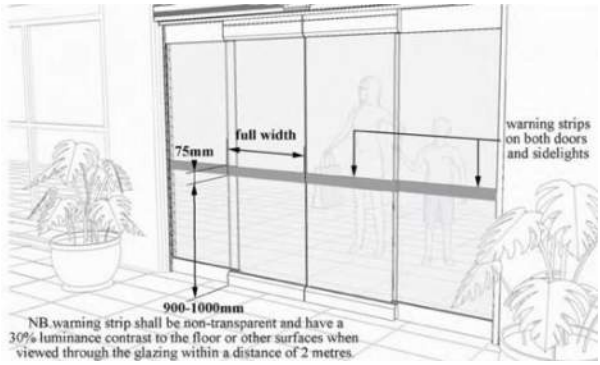

Figure 15 – Diag.4 DE-IG02 2013

The following are some compliant examples of the application of Visual Indicators on glazing.

In considering the statutory requirements for Visual Indicators on glazing, it is important to note other contextual factors; such as glare, lighting, floor finishes, furniture placement and casted shadows from building lines.

The following are some non-compliant examples of the application of Visual Indicators on glazing as a result of these contextual factors.

 Luminance contrast is not achieved due to glare and shadow cast.	 *Luminance contrast is not achieved due to floor finish colour.*
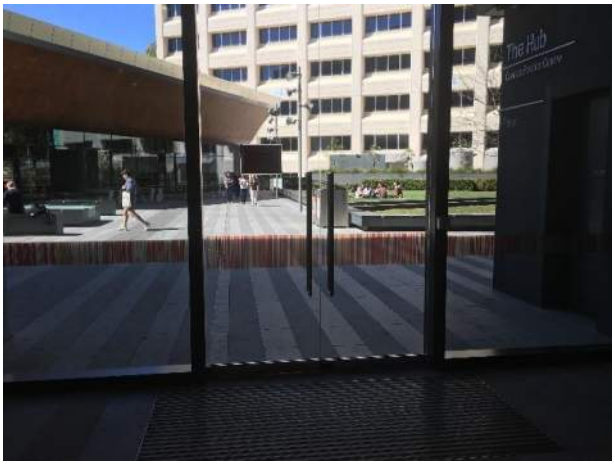 *Luminance contrast is not achieved due to shadow cast.*	

Future documentation will need to be provided detailing the application of Visual Indicators if full-height glazing is proposed to any wall or doorway.

3.2. Carparking and Line Marking

NCC Reference:	DP1(a)(i)
	DP8(a) and (b)
	D3.5 Accessible Parking
Australian Standard Reference:	AS 2890.6 2009 Car parking

3.2.1. General

Carparking is shown in the overall ground floor plan, indicating the adjacent public carpark with the inclusion of what appears to be six (6) accessible carparking spaces.

The minimum number of accessible parking spaces will need to be provided in accordance with the provisions of NCC Table D3.5.

- Outpatient Hospital 1 space for every 50 parking spaces provided or part thereof
- Non- Outpatient Hospital 1 space for every 100 parking spaces provided or part thereof

The line marking associated with the accessible parking spaces will need to satisfy the provisions of Section 3 of AS2890.6:2009. The international symbol for access shall be marked in accordance with Figure 3.1 of AS2890.6:2009. Refer to the extracts from the Standard below.

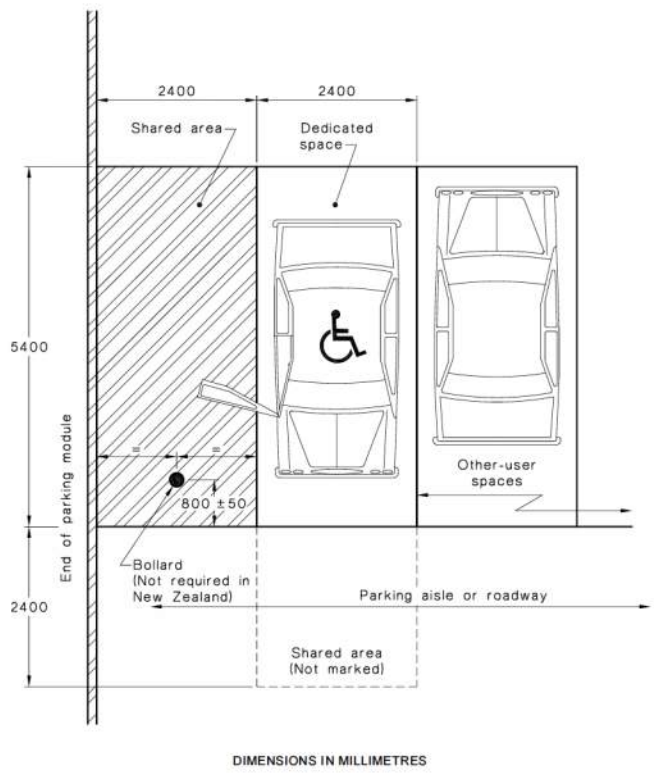

FIGURE 2.2 EXAMPLE OF AN ANGLE PARKING SPACE WITH SHARED AREA ON ONE SIDE ONLY—DIMENSIONS FOR AUSTRALIA ONLY*

Figure 16 – Fig. 2.2 of AS2890.6 2009

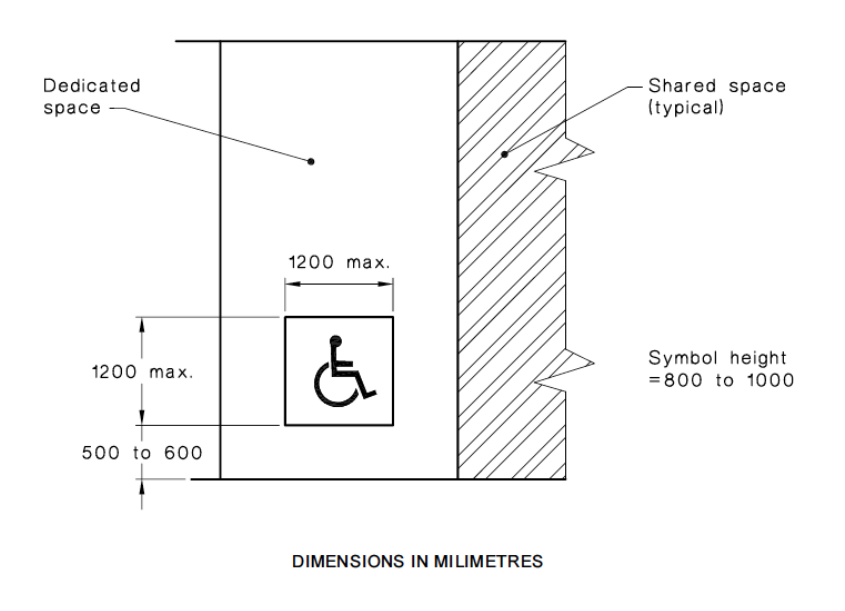

Figure 17 – Fig. 3.1 of AS2890.6 2009

3.3. Floor Finishes

NCC Reference: NCC Table D2.14

Australian Standard Reference: Clause 7 of AS1428.1:2009

HB198:2014 (slip resistance)

3.3.1. Slip Resistance

The slip resistance of the floor finishes will need to satisfy the minimum requirements of NCC Table 2.14 and the slip resistance ratings noted within Australian Standard HB198.

Certification indicating compliance with the slip resistance provisions will need to be provided from the respective tile suppliers.

The table following summarises the minimum slip resistance levels of flooring materials to be achieved within this development.

LOCATION	NCC TABLE D2.14	AUSTRALIAN STANDARD HB198	CRITERION SATISFIED
Ramp steeper than 1:14	Dry P4/R11 – Wet P5/R12	P5/R12	Not Applicable
Ramp steeper than 1:20 but not steeper than 1:14	Dry P3/R10 – Wet P4/R11		Not Applicable
Tread or landing surface	Dry P3/R10 – Wet P4/R11	Dry P3/R10 – Wet P4/R11	Additional Information to be provided prior to the issue of the Final Access Certification and Crown Certificate.
Nosing	Dry P3 – Wet P4	Dry P3 – Wet P4	Additional Information to be provided prior to the issue of the Final Access Certification and Crown Certificate.
Transition Areas, wards and corridors in hospitals.		P2/R9	Additional Information to be provided prior to the issue of the Final Access Certification and Crown Certificate.
External ramps including sloping driveways, footpaths, etc., under 1:14, external sales areas (e.g. markets), external carpark areas, external colonnades, walkways, pedestrian crossings, balconies, verandas, carports, driveways, courtyards and roof decks		P4/R11	Additional Information to be provided prior to the issue of the Final Access Certification and Crown Certificate.
External Ramps (including sloping driveways, footpaths etc.) steeper than 1 in 14		P5/R12	Not Applicable

LOCATION	NCC TABLE D2.14	AUSTRALIAN STANDARD HB198	CRITERION SATISFIED
Wet area / sanitary facilities		P3/R10	Additional Information to be provided prior to the issue of the Final Access Certification and Crown Certificate.
Bathrooms and ensuites in hospitals.		P3/B	Additional Information to be provided prior to the issue of the Final Access Certification and Crown Certificate.

3.3.2. Carpet

The finishes schedule may propose carpet finishes within this development. It will be necessary that the specification and application of the carpet satisfy the provisions of:

- NCC Clause D3.3 (g) & (h) and
- AS1428.1:2009 Clause 7.4

Clause 7.4.1 of AS1428.1:2009 states:

Where carpets or any soft flexible materials are used on the ground or floor surface—

(a) the pile height or pile thickness shall not exceed 6 mm and the carpet backing thickness shall not exceed 4 mm;

(b) exposed edges of floor covering shall be fastened to the floor surface and shall have a trim along the entire length of any exposed edge; and

(c) at the leading edges, carpet trims and any soft flexible materials shall have a vertical face no higher than 3 mm or a rounded bevelled edge no higher than 5 mm or above that height a gradient of 1 in 8 up to a total maximum height of 10 mm

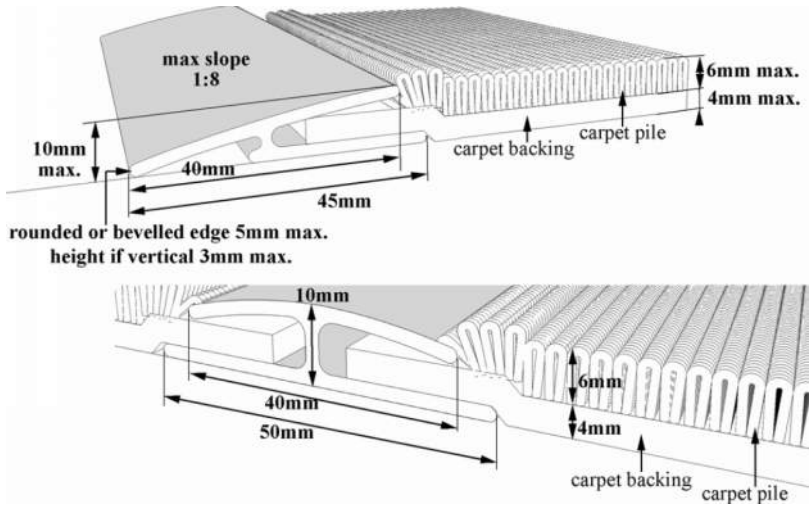

Figure 18 – Examples of carpet joints on an accessible path of travel

3.3.3. Floor transitions

Transitions between floor finishes will need to comply with Clause 7.2 of AS1428.1:2009.

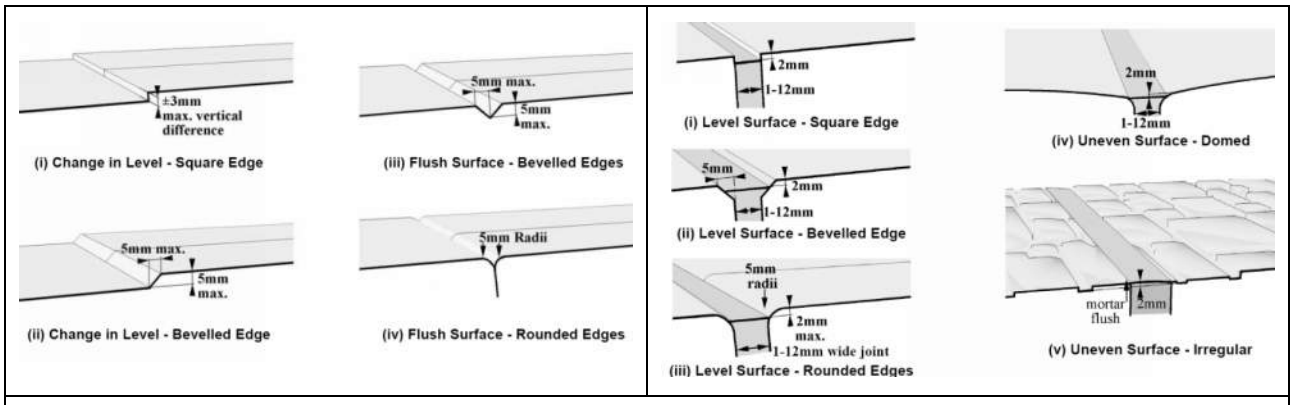

Figure 19 – diagrams indicating the acceptable tolerances between pavement finishes

3.3.4. Recessed Matting

The plan may propose the installation of recessed matting. The installation will need to satisfy the following requirements from Clause 7.4.2 of AS1428.1:2009

Matting recessed within a continuous accessible path of travel—

(a) where of metal and bristle type construction or similar, its surface shall be no more 3 mm if vertical or 5 mm if rounded or bevelled, above or below the surrounding surface; and

(b) where of a mat or carpet type material, shall have the fully compressed surface level with or above the surrounding surface with a level difference no greater than 3 mm if vertical or 5 mm if rounded or bevelled.

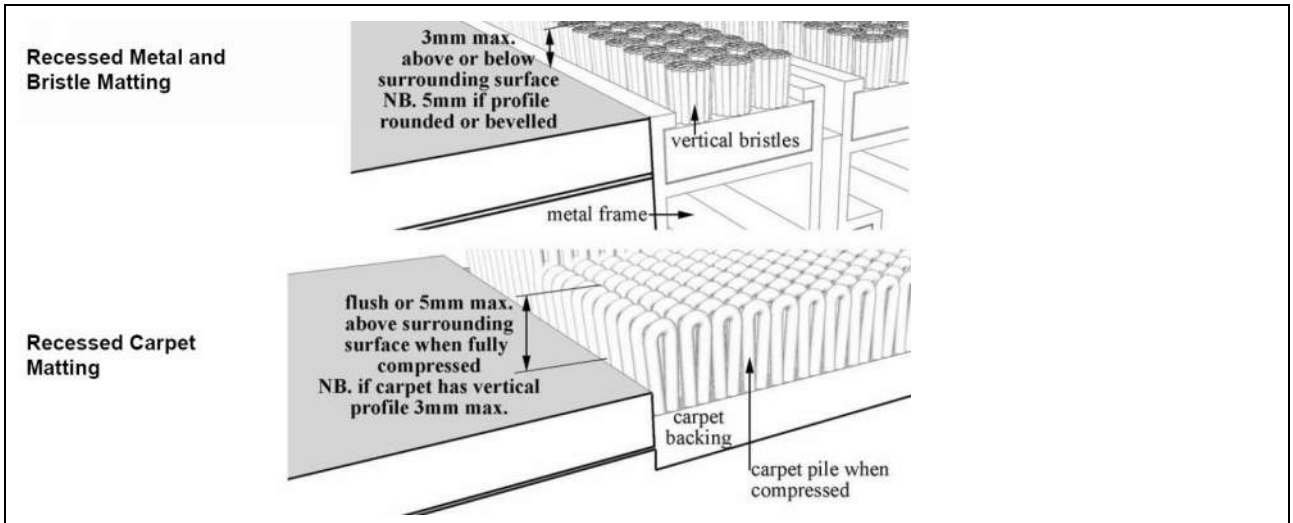

Figure 20 – Recessed matting height tolerances

3.4. Signage

The requirements are referenced in the following legislation:

NCC Reference:	D3.6 Signage
	Specification D3.6
Australian Standard Reference:	Clause 8 – Signage, AS1428.4.1 2009 Design for access and mobility - Means to assist the orientation of people with vision impairment
	Clause 16 – Symbols, AS1428.4.2 1992 Design for access and mobility - Enhanced and additional requirements - Buildings and facilities
	Clause 17 – Signs, AS1428.4.2 1992 Design for access and mobility - Enhanced and additional requirements - Buildings and facilities
	DR AS1428.4.2-2017 Design for access and mobility – Wayfinding

3.4.1. Statutory Signage Requirements

The statutory requirements for signage apply to entrances, toilets, hearing augmentation and exits.

The applicable clauses to the topic of entrances of the NCC Section **D3.6 Signage** states:

In a building required to be accessible—

*(a) braille and tactile signage complying with **Specification D3.6** must—*

(i) incorporate the international symbol of access or deafness, as appropriate, in accordance with AS 1428.1 and identify each—

(A) sanitary facility, except a sanitary facility within a sole-occupancy unit in a Class 1b or Class 3 building; and

(B) space with a hearing augmentation system; and

(ii) identify each door required by E4.5 to be provided with an exit sign and state—

*(A) **"Exit"**; and*

*(B) **"Level"** ; and either*

(aa) the floor level number; or

(bb) a floor level descriptor; or

(cc) a combination of (aa) and (bb); and

(b) signage including the international symbol for deafness in accordance with AS 1428.1 must be provided within a room containing a hearing augmentation system identifying—

(i) the type of hearing augmentation; and

(ii) the area covered within the room; and

(iii) if receivers are being used and where the receivers can be obtained; and

(c) signage in accordance with AS 1428.1 must be provided for accessible unisex sanitary facilities to identify if the facility is suitable for left or right-handed use; and

(d) signage to identify an ambulant accessible sanitary facility in accordance with AS 1428.1 must be located on the door of the facility; and

(e) where a pedestrian entrance is not accessible, directional signage incorporating the international symbol of access, in accordance with AS 1428.1 must be provided to direct a person to the location of the nearest accessible pedestrian entrance; and

(f) where a bank of sanitary facilities is not provided with an accessible unisex sanitary facility, directional signage incorporating the international symbol of access in accordance with AS 1428.1 must be placed at the location of the sanitary facilities that are not accessible, to direct a person to the location of the nearest accessible unisex sanitary facility.

DR AS 1428.4.2-2017, The Australian Standard for design for access and mobility – Wayfinding, specifies the minimum wayfinding sign requirements to enable pedestrians, particularly those who are blind, deafblind or have low vision, to enter and to navigate within buildings and/or sites, including a return route, in a safe and independent manner.

This Standard will also be of use to people with other disabilities who require enhanced information to communicate wayfinding information within buildings.

Extracts from the Standard are appended in this report.

3.4.2. Entrances

In a building required to be accessible, the accessible entrance shall be not more than 50m from the main pedestrian entrance (NCC D3.2 (b)(ii)).

The main hospital entrance is accessible.

3.4.3. Exit Signage

AS2293.1:2005 outlines details for illuminated exit signs.

6.6 SIZE OF PICTORIAL ELEMENT

The minimum allowable size of any pictorial element on an exit sign shall be determined by the maximum viewing distance intended under the design as follows:

(a) For viewing distances not greater than 32 m, in accordance with Table 6.1.

TABLE 6.1

MINIMUM PICTORIAL ELEMENT HEIGHTS

Maximum viewing distance (m)	Minimum pictorial element height (mm)
16	100
24	150
32	200

(b) For viewing distances greater than 32 m, in accordance with the following equation:

$$\text{Minimum element height} = \frac{\text{Maximum viewing distance}}{160}$$

Braille tactile Exit signage will need to be provided at each level of the building associated with the fire egress door.

Examples of Braille Tactile Signage include:

3.4.4. WC Signage

Braille tactile WC signage will need to be provided at each public sanitary facility entrance.

Examples of Braille Tactile Signage include:

NB: Text "Unisex Toilet RH" to be used where the toilet is configured adjacent to a wall on the right, and simialrly text "Unisex Toilet LH" is to be used where the toilet is adjacent to a wall on the left of the toilet pan.

3.3.7. Hearing Augmentation Signage

Braille tactile hearing augmentation signage will need to be provided in a room or area in which an inbuilt communication system is installed.

Examples of Braille Tactile Signage include:

Figure 21 – Examples of Braille Tactile Signage from www.brailletactilesigns.com.au

The documentation provided indicates compliance with the above requirements (as per review of drawings A-6200-A6202)

Clause 8 of AS128.4.1:2009 and Clause 16 & Clause 17 AS1428.4.2 1992 specify the requirements of the Braille Tactile Signage. They are appended to this report as Appendix 1 and 2.

3.4.5. General Signage Information

The following information applies to all signage principles including non-statutory signage such as wayfinding and room identification.

3.4.5.1. Signage Maintenance

The maintenance of signage is vital. All signage should have a maintenance plan, including:

- Prohibiting of sticking posters/flyers up over permanent signage

- Incorporating a cleaning schedule
- Incorporating a maintenance schedule to review condition of signage

Vegetation should be continually trimmed and upkeep is to be reviewed as part of the cemetery's landscape maintenance to ensure signage is not hidden behind vegetation.

3.4.5.2. Signage Size

The recommended size of signage is dependent on the distance by which it is aiming to be identified. The following summary is a recommended guideline:

Type	User	Distance	Letter Size (ref. Table 2 of AS1428.2:1992)
Gate/ Building	Ped. & Drivers	50m	150mm
Building	Pedestrians	25m	80mm
Building	Pedestrians	12m	40mm
Building	Pedestrians	6m	20mm

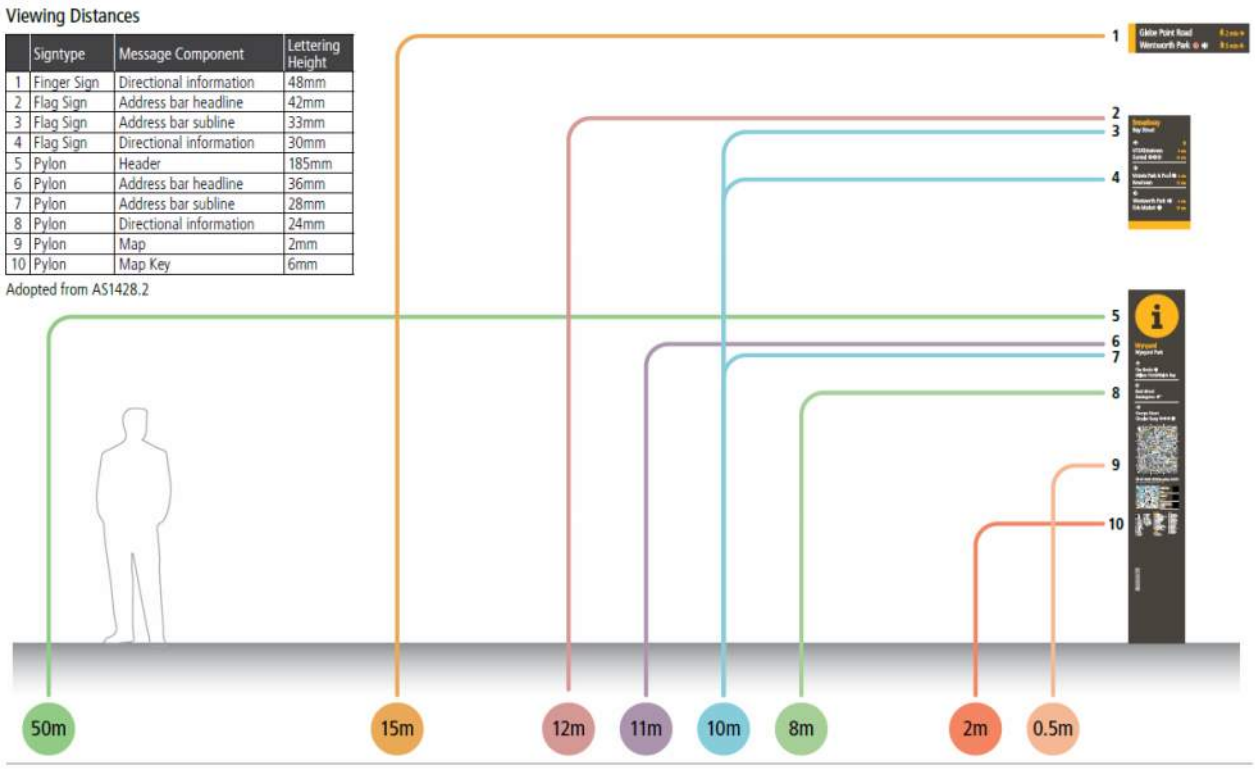

	Signtype	Message Component	Lettering Height
1	Finger Sign	Directional information	48mm
2	Flag Sign	Address bar headline	42mm
3	Flag Sign	Address bar subline	33mm
4	Flag Sign	Directional information	30mm
5	Pylon	Header	185mm
6	Pylon	Address bar headline	36mm
7	Pylon	Address bar subline	28mm
8	Pylon	Directional information	24mm
9	Pylon	Map	2mm
10	Pylon	Map Key	6mm

Figure 22 – View range and lettering height (Source City of Sydney signage manual)

3.4.5.3. Icon Sizing

The size of target boards shall be relative to the icon size.

Appendix D of AS1319:1994 (Safety Signs for the Occupational Environment) indicates the sizing of icons relative to their target board:-

> ***Appendix D***
>
> *(b) Single and multiple signs with target board.*
>
> *The dimensions of the target board relative to the size of the symbolic sign(s) is shown in Figure D1.*
>
> *The target board should be white or yellow for warning signs, and white only for other signs. Black may also be used for warning signs (see Clause 2.3.3(b)).*

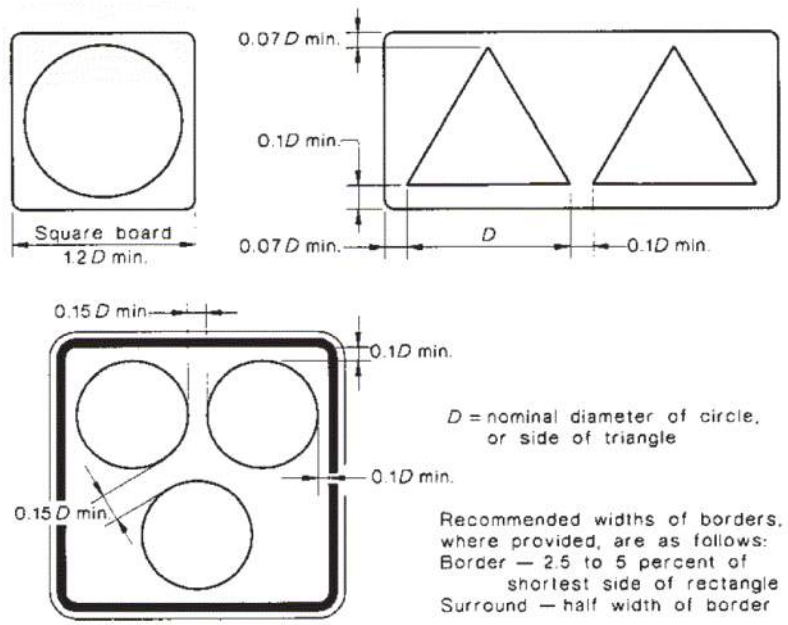

Figure 23 – Fig. D1 of AS1319:2994.

As appropriated from AS1319:1994 (Safety Signs for the Occupational Environment) Appendix D, the size of the sign (target board) shall be 1.2 x Diameter of the icon, with a minimum boarder of 0.07 x Diameter of the icon.

The following Sketch indicated the minimum sizing of icons and relative target board size surrounding the icons.

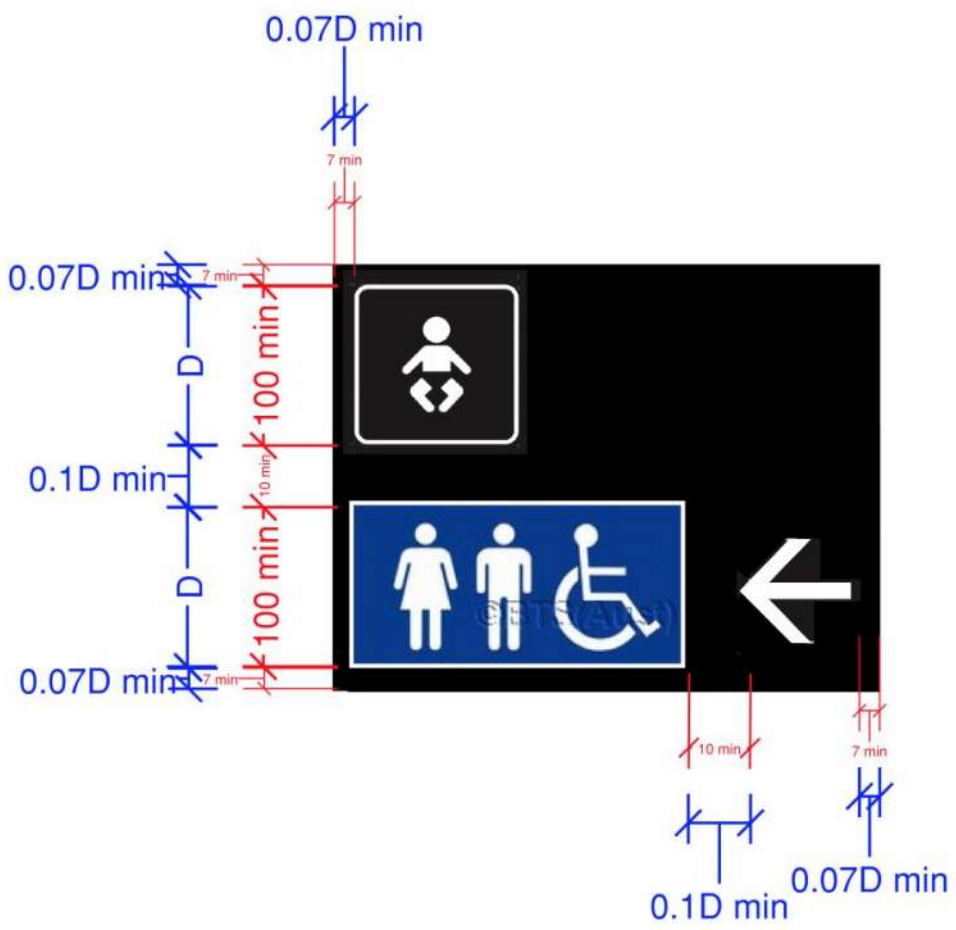

Figure 24 – Sketch of recommended signage icon size and spacing

The minimum size of an icon should be 100mm for overhead signage in accordance with Exit Sign requirements.

The size of icons should be in proportion to the size of the sign itself, as per the following recommendations:

Sign Size (appropriated from AS1319:1994)	Icon Size
60mm x 60mm (with boarder of 3.5mm)	50mm x 50mm
90mm x 90mm (with boarder of 5.2mm)	75mm x 75mm
120mm x 120mm (with boarder of 7mm)	100mm x 100mm

3.4.5.4. Mounting Heights

The mounting heights of signage will need to incorporate the viewing zones as identified in AS1428.2:1992.

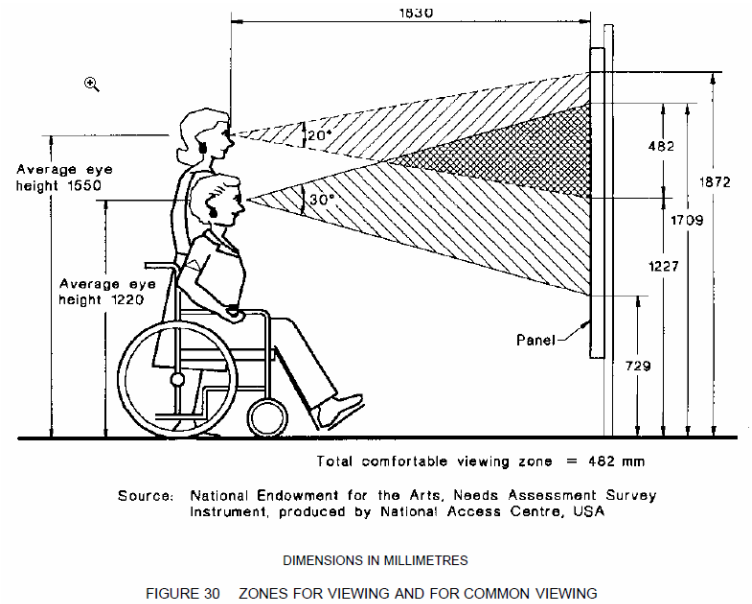

Figure 25 – Extract from Australian Standard indicating acceptable view range for signage

3.4.5.5. Luminance & Colour Contrast

Signs should be matt in colour, instead of a gloss finish to avoid any glare.

The minimum recommended luminance contrast for lettering on signage to the sign background is 30%.

The minimum recommended luminance contrast of a sign to its context is 30%.

3.5. Walkways, Ramps and Landings

NCC Reference:	NCC Clause D3.3(a)(i)
Australian Standard Reference:	Clause 10 of AS 1428.1:2009

3.5.1. General

The NCC Clause D3.3(a)(i) identifies that:

In a building required to be accessible—

(a) every ramp and stairway, except for ramps and stairways in areas exempted by D3.4, must comply with—

(i) for a ramp, except a fire-isolated ramp, clause 10 of AS 1428.1

The works to not propose any ramps.

The following extracts have been provided by way of information should a ramp be proposed at a later design stage.

Ramp setout specifications for ramps of gradient 1:14 are provided at Figure 14 of AS1428.1:2009.

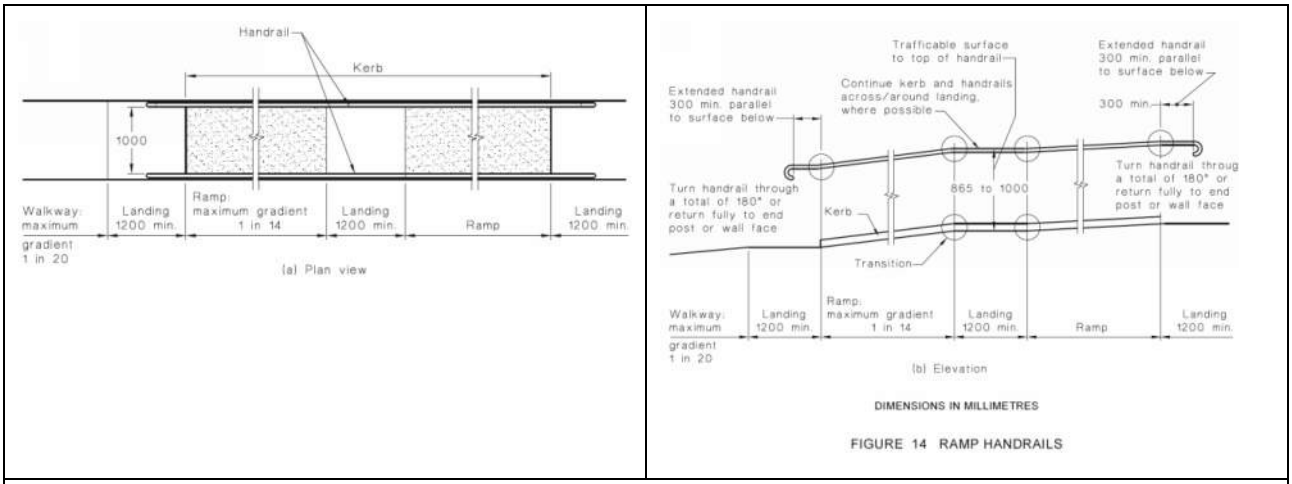

Figure 26 – Figure 14 of AS1428.1:2009

3.6. Fire Stairs

NCC Reference:	Table D2.14 Slip Resistance Classification
	D3.3 Parts of buildings to be accessible
	(a)(ii) for a stairway
Australian Standard Reference:	Clause 11 Stairways AS1428.1:2009
	Clause 12 Handrails AS1428.1:2009

3.6.1. Stairs - General

There are two sets of fire stairs within the new building and one set of circulation stairs.

The following plan extract highlights the location of fire stairs and circulation stair.

Figure 27 – Extract from Ground Floor Plan

3.6.2. Fire Stairs

The detailing of fire stairs will need to satisfy the requirements of Clauses 11.1 (f) & (g) of AS1428.1:2009.

Specific attention is directed to the following:

f) *At the nosing, each tread shall have a strip not less than 50 mm and not more than 75 mm deep across the full width of the path of travel. The strip may be set back a maximum of 15 mm from the front of the nosing. The strip shall have a minimum luminance contrast of 30% to the background. Where the luminous contrasting strip is affixed to the surface of the tread, any change in level shall comply with Clause 7.2 and Clause 7.3.*

g) *Where the luminance contrasting strip is not set back from the front of the nosing then any area of luminance contrast shall not extend down the riser more than 10 mm*

The provision of the nosing strip may be an applied paint finish. An example of a suitable product is the Berger Jet Dry Non-Slip Product. (Link to Berger Jet Dry Product)

The detailing of the handrail provided within the fire stairs will need to satisfy the provisions of Clause 11.2(c) which requires that there be no vertical sections in the handrail design and that the handrail follow the angle of the stairway nosing. Details will need to be provided prior to the issue of the Final Access Certification and Crown Certificate.

The details of the handrail design will need to be provided as part of the Construction Certificate documentation.

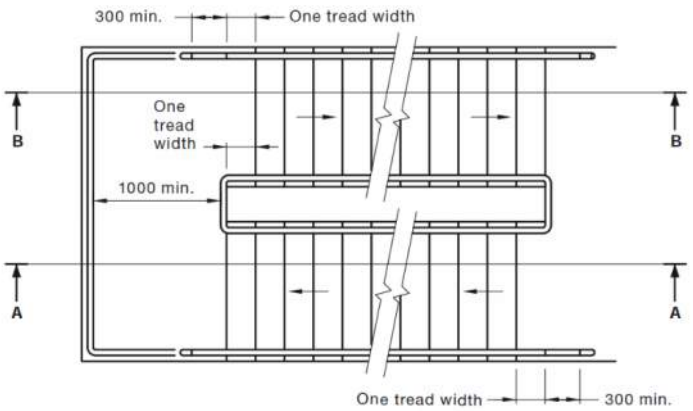

Figure 28 – Fig. 28 of AS1428.1:2009

Appropriate exit Braille Tactile Signage is required. Refer to the Signage section of this report.

A detailed plan for fire emergency exit is required, including the provision of stair sleds or the like.

3.6.3. Circulation Stairs

The circulation stairs will need to comply with the provisions noted at Clause 11 and 12 of AS1428.1:2009.

Specific attention is directed to the following:

a) Compliant handrail designs

b) Compliant handrail extensions to the top and bottom of each flight

c) Non-slip finish to going (Refer to NCC Table D2.14)

d) Non-slip 50-75 nosing fixed to each going

e) Opaque risers

f) Compliant TGSIs located at the top and bottom of each flight. TGSIs are not required at mid-landings where no additional pedestrians are added to the stair system

   Note: TGSIs shall be 600mm in width (or 300mm wide where the stair is closer than 3m to an adjacent wall.)

g) Minimum lighting level of 150 lx to be achieved

The following extract Figures below highlight the main features of a compliant stair design.

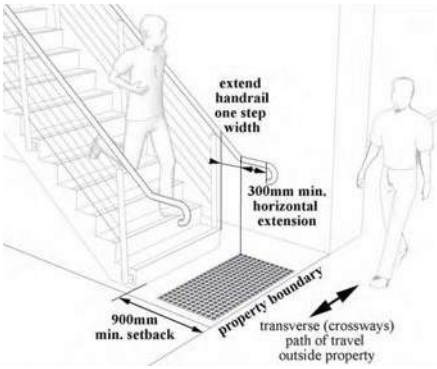

Figure 29 – Diag.25A DE-IG02 2013

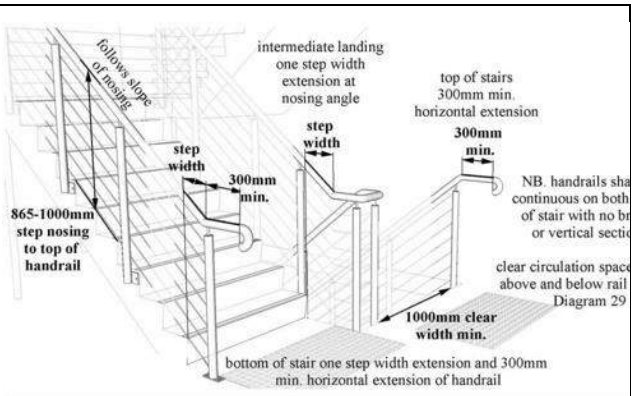

Figure 30 – Diag.25C DE-IG02 2013

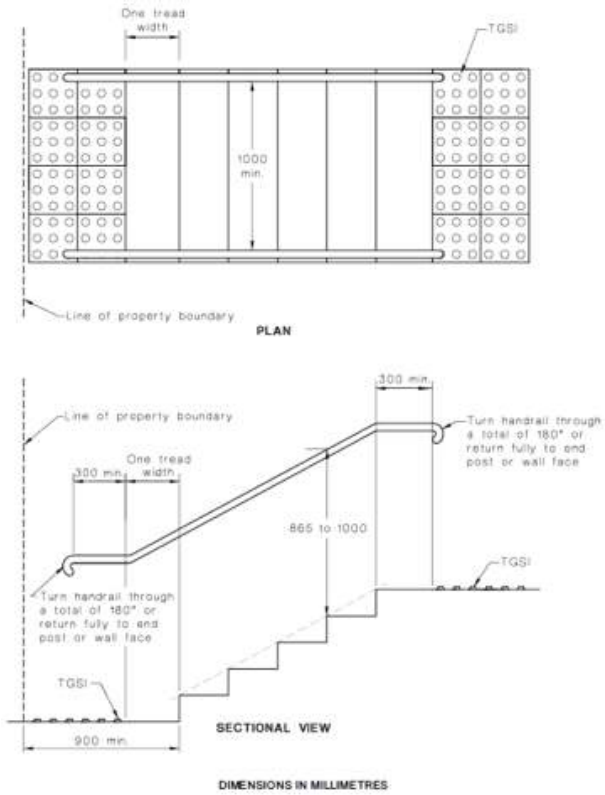

FIGURE 26(A) STAIRWAY LOCATION AND HANDRAIL EXTENSIONS AT BOUNDARY

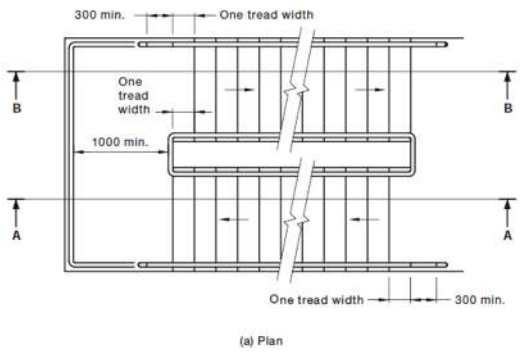

FIGURE 28 (in part) HANDRAILS TO STAIRS WITH INTERMEDIATE LANDINGS

Figure 31 – Fig.26A Section 11 AS1428.1 2009	*Figure 32 – Fig.28 Section 11 AS1428.1 2009*
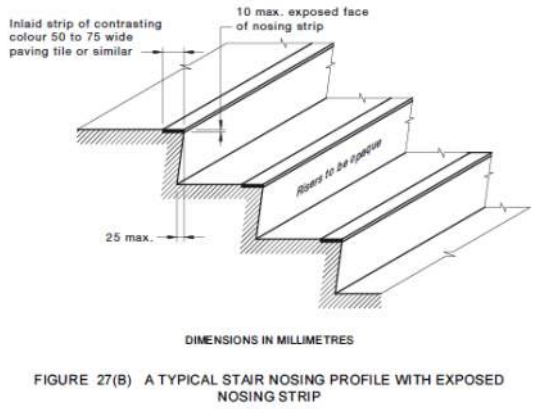 FIGURE 27(B) A TYPICAL STAIR NOSING PROFILE WITH EXPOSED NOSING STRIP	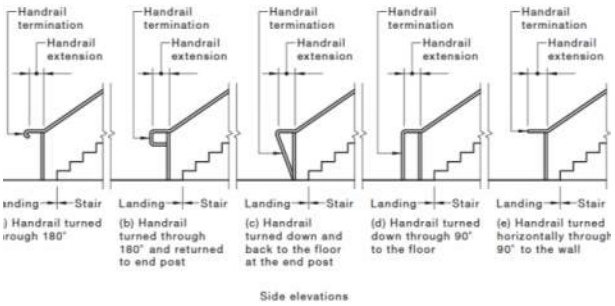
Figure 33 – Fig.27B Section 11 AS1428.1 2009	*Figure 34 – Fig.26C Section 11 AS1428.1 2009*

The following information is provided by way of information:

12 HANDRAILS

The design and construction of handrails shall comply with the following:

(a) Handrails and balustrades shall not encroach into required circulation spaces.

(b) The cross-section of handrails shall be circular or elliptical, not less than 30 mm or greater than 50 mm in height or width for not less than 270° around the uppermost surface as shown in Figures 29(a) and 29(b). Elliptical handrails shall have the greater dimension in the horizontal axis

(c) Exposed edges at ends and corners of handrails shall have a radius of not less than 5 mm.

(d) The top of handrails shall be not less than 865 mm nor more than 1000 mm above the nosing of stairway tread or the plane of the finished floor of the walkway, ramp or landing.

(e) The height of the top of the handrail, measured in accordance with Item (d), shall be consistent through the ramp (or stairs) and any landings.

(f) If a balustrade is required at a height greater than the handrail, both shall be provided.

(g) Handrails shall be securely fixed and rigid, and their ends shall be turned through a total of 180°, or to the ground, or returned fully to end post or wall face

(h) The clearance between a handrail and an adjacent wall surface or other obstruction shall be not less than 50 mm. This clearance shall extend above the top of the handrail by not less than 600 mm.

(i) Handrails shall have no obstruction to the passage of a hand along the rail

(j) The inside handrail at landings shall always be continuous

3.7. Doorways and Circulation at Doorways

NCC Reference: D3.2 Access to buildings

D3.3 Parts of buildings to be accessible

Australian Standard Reference: Clause 13 (Doorways, Doors and Circulation Spaces at Doorways) of AS1428.1 2009

3.7.1. Clear Door Width

The minimum clear width of all doorways (including swing and sliding doorways) to rooms required to be accessible is to be not less than 850mm clear.

Where double doors are proposed, the active leaf is to have a minimum clear width of 850mm.

Provide confirmation of all door clear open widths.

Additional Information to be provided prior to the issue of the Final Access Certification and Crown Certificate.

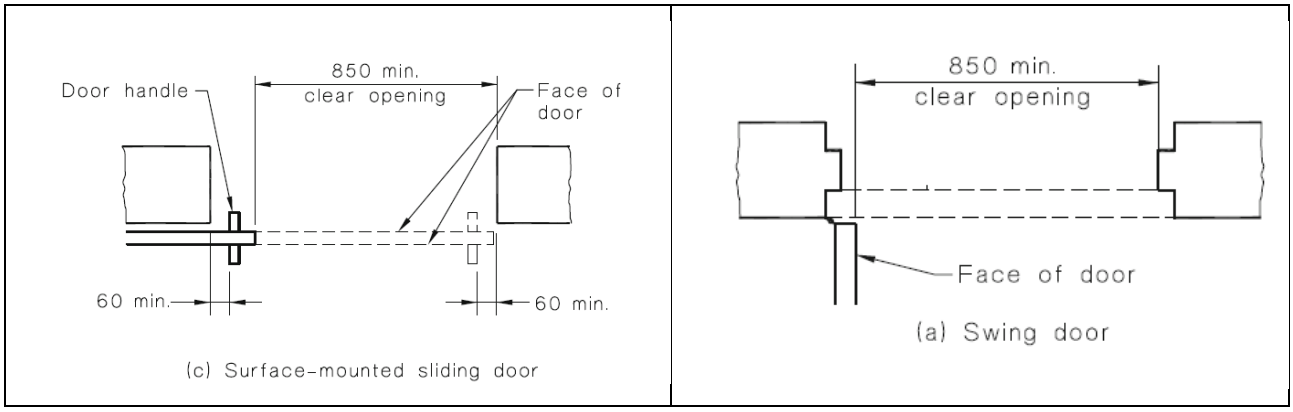

3.7.2. Luminance contrast

Rooms that are not required to be accessible do not need to satisfy the requirements for doorway luminance contrast.

All other rooms, required to be accessible, such as nursing stations, offices etc. require compliance with doorway luminance contrast requirements noted at Clause 13.1 of AS1428.1:2009:

> *All doorways shall have a minimum luminance contrast of 30% provided between—*
>
> *(a) door leaf and door jamb;*
>
> *(b) door leaf and adjacent wall;*
>
> *(c) architrave and wall;*
>
> *(d) door leaf and architrave; or*
>
> *(e) door jamb and adjacent wall.*
>
> *The minimum width of the area of luminance contrast shall be 50 mm*

The prevailing view is that option (b) – indicating luminance contrast between the *door leaf and adjacent wall* is the preferred option.

A table indicating wall colour and door colour with the associated luminance contrast level achieved will need to be prepared and provided to demonstrate compliance with the requirements

of Clause 13.1 of AS1428.1:2009. Additional Information to be provided prior to the issue of the Final Access Certification and Crown Certificate.

3.7.3. Successive Doorways

Where there are successive doorways, a clear distance of 1450mm minimum is required between each doorway, in accordance with Figure 34 of AS1428.1:2009.

3.7.4. Door Controls

The Australian Standard requires that door hardware be located within 900-1100mm AFFL.

If lever hardware is proposed to be utilised it will be necessary for the design of the lever to comply with the provisions of Clause 13.5 of AS1428.1:2009.

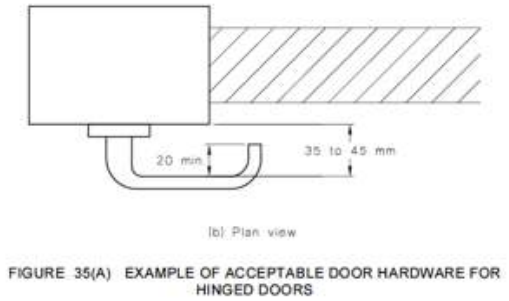

Figure 35 – Fig. 35 Section 13 AS1428.1:2009

The hardware will need to be a “D” handle style fixed to both sides of the door assembly as required by Clause 13.5.2(c) of AS1428.1:2009.

3.7.5. Circulation at doorways

Clause 13.3 of AS1428.1:2009 provides direction as to the required circulation space to approach and enter rooms required to be accessible. Doorways to rooms that are not required to be accessible do not need to comply with the requirements for circulation at doorways.

If the furniture arrangement of the rooms precludes compliant circulation from being achieved, the commitment by the hospital will be to modify the work space to meet the specific needs of the employee. The work-place policy statement will need to be provided to substantiate this approach.

We have reviewed the drawings provided and based on the information contained within the State Significant Development Application drawings it appears that the circulation at doorway provisions noted at Clause 13.3 of AS1428.1:2009 are able to be achieved, with the exception of a several doorways noted below.

Once a furniture layout plan is provided we will be able to assess the circulation at doorways more thoroughly.

Additional Information to be provided prior to the issue of the Final Access Certification and Crown Certificate.

Figure 36 – Examples of compliant sliding door assemblies

Figure 37 – Examples of compliant sliding door assemblies

Level & Zone	Doorway type	Doorway Location	Action
Lower Ground Floor	Single swing	Doorways into staff room off next to medical gases room 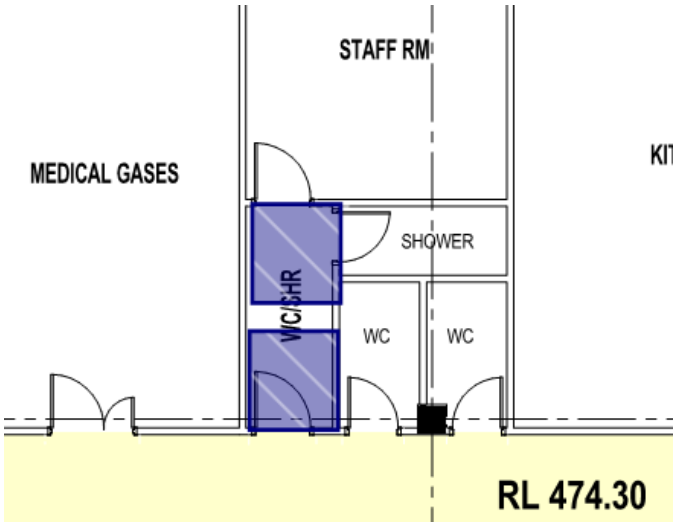	Ensure latch-side clearance of 530mm where door opens toward user and 510mm latch-side clearance where door opens away from user. Note: Blue zone indicates approximate door circulation requirements.

Level & Zone	Doorway type	Doorway Location	Action
Lower Ground Floor	Single swing	Doorway into corner office 1P 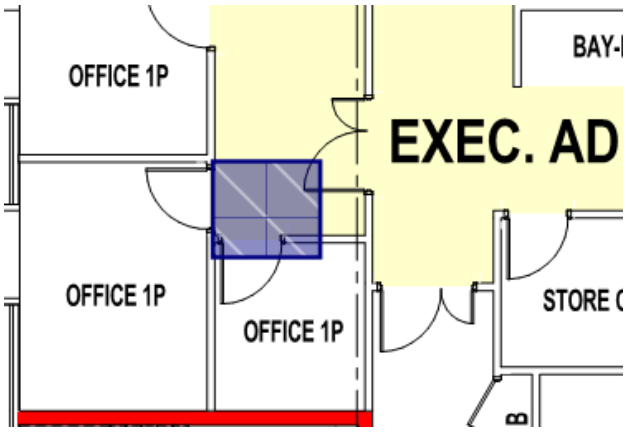	Ensure latch-side clearance of 510mm. Note: Blue zone indicates approximate door circulation requirements.
Lower Ground Floor	Single swing	Door out of reception room 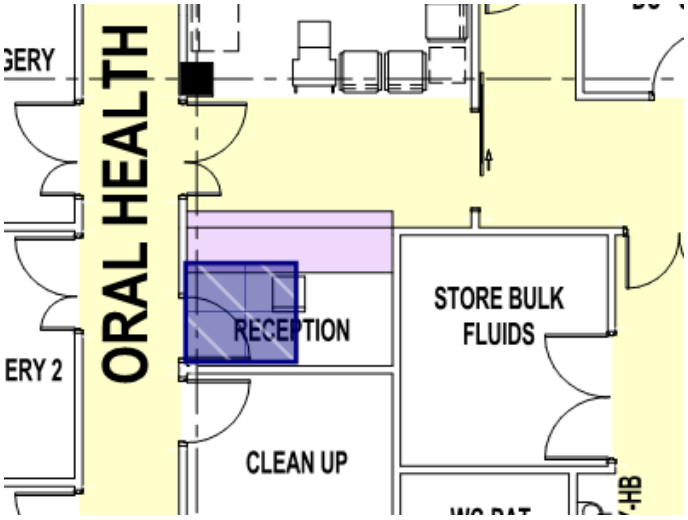	Ensure latch-side clearance of 530mm. Note: Blue zone indicates approximate door circulation requirements

The following extracts from the Standard is provided by way of information.

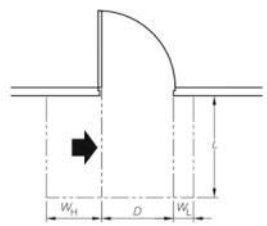

Dimension D	Dimension L	Dimension W_H	Dimension W_L
850	1220	560	340
900	1185	510	340
950	1160	460	340
1000	1140	410	340

(a) Hinge-side approach, door opens away from user

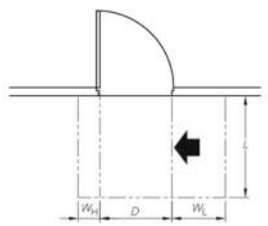

Dimension D	Dimension L	Dimension W_H	Dimension W_L
850	1240	240	660
900	1210	190	660
950	1175	140	660
1000	1155	90	660

(b) Latch-side approach, door opens away from user

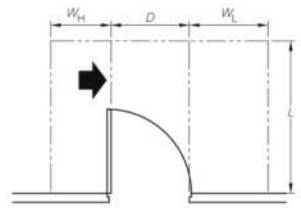

Dimension D	Dimension L	Dimension W_H	Dimension W_L
850	1670	660	900
900	1670	610	900
950	1670	560	900
1000	1670	510	900

(e) Hinge-side approach, door opens towards user

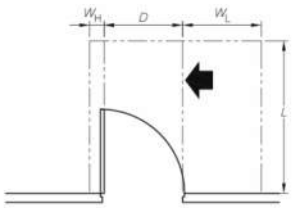

Dimension D	Dimension L	Dimension W_H	Dimension W_L
850	1670	110	900
900	1670	110	900
950	1670	110	900
1000	1670	110	900

(f) Latch-side approach, door opens towards user

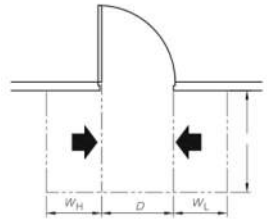

Dimension D	Dimension L	Dimension W_H	Dimension W_L
850	1240	560	660
900	1210	510	660
950	1175	460	660
1000	1155	410	660

(c) Either side approach, door opens away from user

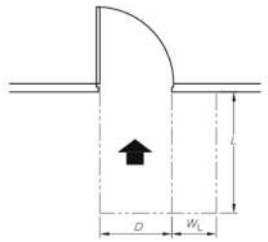

Dimension D	Dimension L	Dimension W_H	Dimension W_L
850	1450	0	510
900	1450	0	510
950	1450	0	510
1000	1450	0	510

(d) Front approach, door opens away from user

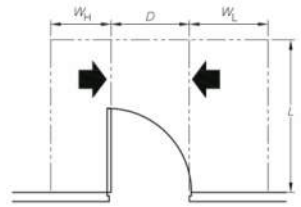

Dimension D	Dimension L	Dimension W_H	Dimension W_L
850	1670	660	900
900	1670	610	900
950	1670	560	900
1000	1670	510	900

(g) Either side approach, door opens towards user

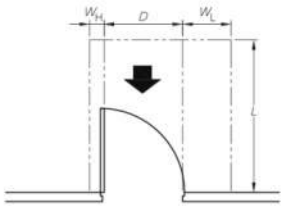

Dimension D	Dimension L	Dimension W_H	Dimension W_L
850	1450	110	530
900	1450	110	530
950	1450	110	530
1000	1450	110	530

(h) Front approach, door opens towards user

Figure 38 – Figure 31 of AS1428.1:2009

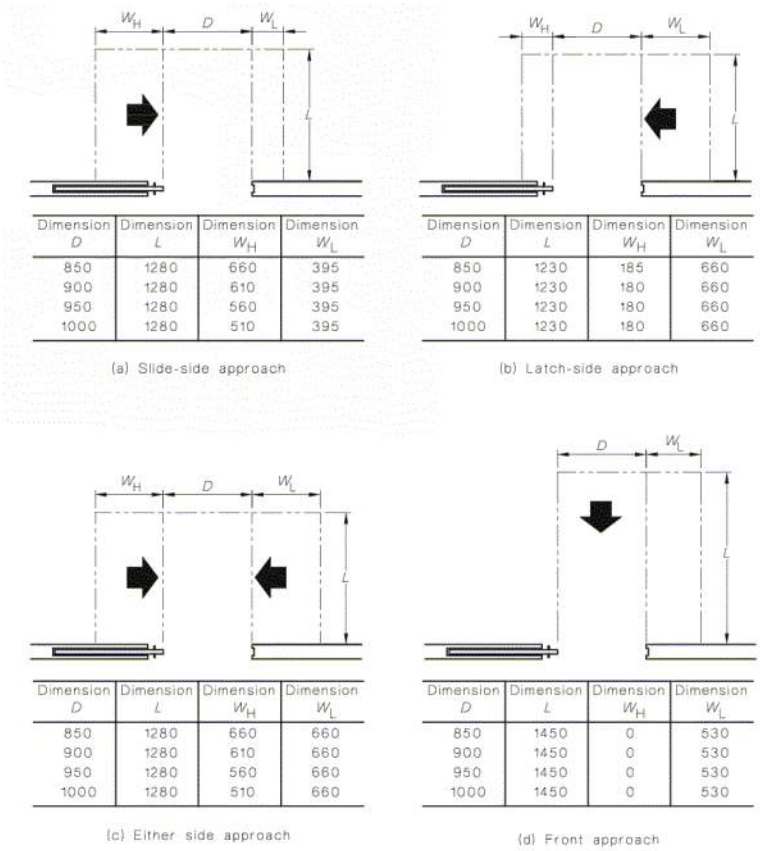

Dimension D	Dimension L	Dimension W_H	Dimension W_L
850	1280	660	395
900	1280	610	395
950	1280	560	395
1000	1280	510	395

Dimension D	Dimension L	Dimension W_H	Dimension W_L
850	1230	185	660
900	1230	180	660
950	1230	180	660
1000	1230	180	660

Dimension D	Dimension L	Dimension W_H	Dimension W_L
850	1280	660	660
900	1280	610	660
950	1280	560	660
1000	1280	510	660

Dimension D	Dimension L	Dimension W_H	Dimension W_L
850	1450	0	530
900	1450	0	530
950	1450	0	530
1000	1450	0	530

Figure 39 – Figure 32 of AS1428.1:2009

3.7.6. Doors – Door Closers

Where door closers are fitted to doors, other than fire doors associated with the fire stairs, the maximum force required to be applied to the door to open the door is not to be greater than 20N force. (Clause 13.5.2(e) AS1428.1:2009).

3.7.7. Doorway Thresholds

Doors to all accessible rooms require a level threshold whereby the maximum lip shall be 3mm high for a straight edge or 5mm high for a bevelled edge. Specific attention is drawn to the doorways leading to outdoor areas. The following photograph is an example of a level threshold transition.

Figure 40 – Photograph of door threshold

3.8. Switches

Australian Standard Reference:	Clause 14 (Switches and General Purpose Outlets) of AS1428.1 2009
Requirement to be Satisfied:	All switches and controls on an accessible path of travel, other than general purpose outlets, shall be located not less than 900 mm nor more than 1100 mm above the plane of the finished floor and not less than 500 mm from internal corners.

3.8.1. General

The operation of many of the doors within this building will be connected to the building access control system. The nature of the activities undertaken will necessitate the overlay of restricted access to some areas.

3.8.2. Video Intercoms

Any video intercom units will need to be installed in accordance with the manufacturer's instructions. The video intercom unit will need to be installed not closer than 5000mm to an internal corner.

3.8.3. Access Control

Access control swipe or fob readers will need to be installed between 900-1100mm AFFL and not closer than 500mm to an internal corner.

Door release buttons will need to be located between 900-1100mm AFFL and not closer than 500mm to an internal corner. The door release button will need to be the large format switches (35 x 35mm rocker switch) or the "mushroom" push button type.

The setout of video intercoms will need to be in accordance with the manufacturer's instructions.

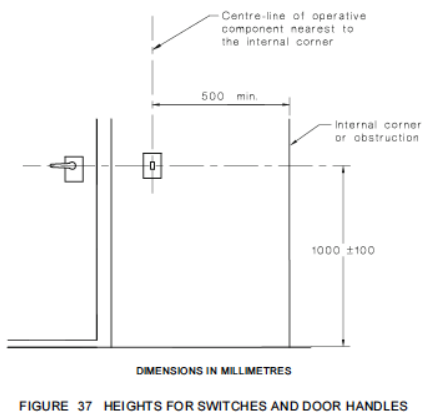

Figure 41 – Fig.37 Section 14 of AS1428.1 2009

Figure 42 – Door release button)

Figure 43 – Installation height setout

Figure 44 – Installation Horizontal Setout

Figure 45 – Installation height setout

Figure 46 – Installation height setout access control

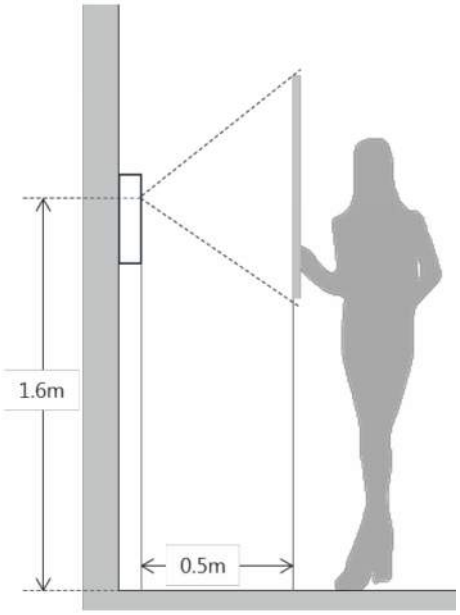

Figure 47 – Setout of video intercoms.

3.9. Sanitary Facilities

NCC Reference:	NCC Clause F2.4 Accessible Sanitary Facilities
	NCC Clause D3.6
	NCC Specification D3.6
Australian Standard Reference:	Clauses 15 & 16 of AS1428.1:2009

3.9.1. General

There are several accessible sanitary facilities within the new building. The mark up of the plan indicates a number of areas where WC facilities are planned to be provided.

There are a number of single WC facilities some of these facilities will need to be designated and detailed as ambulant WC facilities.

There are also a number of locations where showers are provided and yet there is no access to an accessible shower as required by the provisions of the building code. It will be necessary to undertake a review of the type and allocation of the toilet and shower facilities provided in addition to those associated with patient rooms.

The following plan extract highlights their locations:

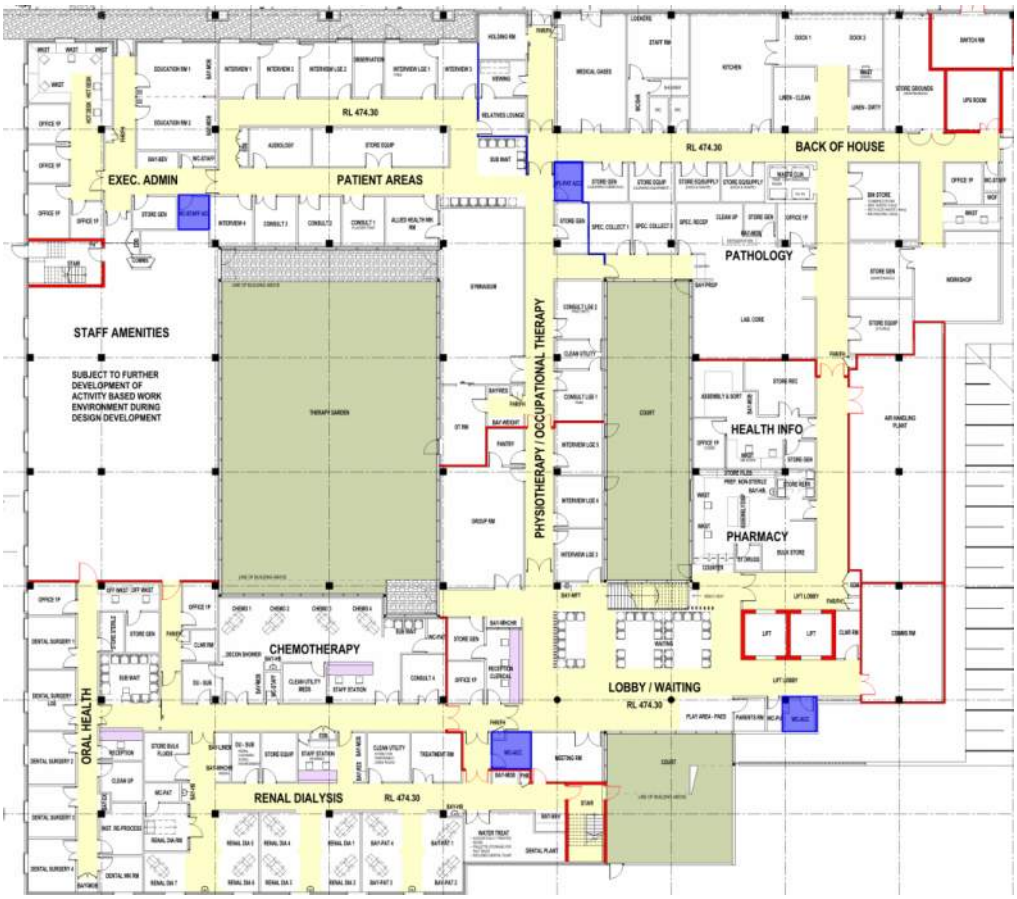

Figure 48 – Extract from Lower Ground Floor Plan

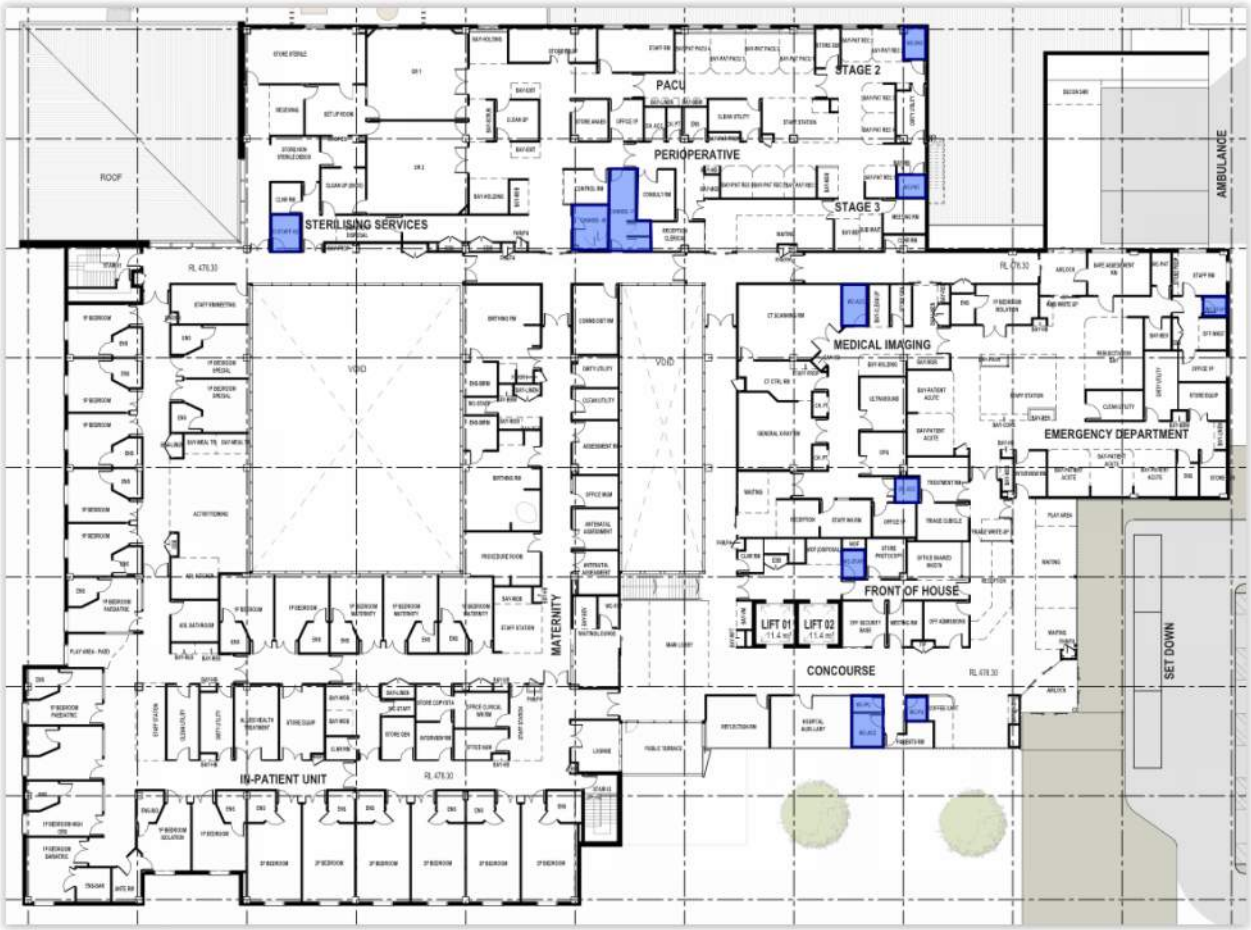

Figure 49 – Extract from Ground Floor Plan

3.9.2. Accessible Sanitary Facilities Review

The internal layouts as well as the position of fixtures of each accessible sanitary facility will need to be provided for our assessment. Additional Information to be provided prior to the issue of the Final Access Certification and Crown Certificate.

3.9.3. NCC Requirements

The table following summarises the NCC requirements to be satisfied.

Accessible WC requirements as nominated at NCC Clause F2.4	Additional criteria to be satisfied	Criteria satisfied by the proposed design
(a) accessible unisex sanitary compartments must be provided in accessible parts of the building in accordance with Table F2.4(a); and	Accessible WC facilities are to be provided (a) 1 on every storey containing sanitary compartments; and (b) where a storey has more than 1 bank of sanitary compartments containing male and female sanitary compartments, at not less than 50% of those banks.	Additional Information to be provided prior to the issue of the Final Access Certification and Crown Certificate.

Accessible WC requirements as nominated at NCC Clause F2.4	Additional criteria to be satisfied	Criteria satisfied by the proposed design
(b) accessible unisex showers must be provided in accordance with Table F2.4(b); and	Where 1 or more showers are provided, not less than 1 for every 10 showers or part thereof.	Additional Information to be provided prior to the issue of the Final Access Certification and Crown Certificate.
(c) at each bank of toilets where there are one or more toilets in addition to an accessible unisex sanitary compartment at that bank of toilets, a sanitary compartment suitable for a person with an ambulant disability in accordance with AS 1428.1 must be provided for use by males and females; and		Additional Information to be provided prior to the issue of the Final Access Certification and Crown Certificate.
(d) an accessible unisex sanitary compartment must contain a closet pan, washbasin, shelf or bench top and adequate means of disposal of sanitary towels; and		Additional Information to be provided prior to the issue of the Final Access Certification and Crown Certificate.
(e) the circulation spaces, fixtures and fittings of all accessible sanitary facilities provided in accordance with Table F2.4(a) and Table F2.4(b) must comply with the requirements of AS 1428.1; and		Additional Information to be provided prior to the issue of the Final Access Certification and Crown Certificate.
(f) an accessible unisex sanitary facility must be located so that it can be entered without crossing an area reserved for one sex only; and		Satisfied
(g) where two or more of each type of accessible unisex sanitary facility are provided, the number of left and right handed mirror image facilities must be provided as evenly as possible; and		Additional Information to be provided prior to the issue of the Final Access Certification and Crown Certificate.
(h) where male sanitary facilities are provided at a separate location to female sanitary facilities, accessible unisex sanitary facilities are only required at one of those locations; and		Satisfied

Accessible WC requirements as nominated at NCC Clause F2.4	Additional criteria to be satisfied	Criteria satisfied by the proposed design
(i) an accessible unisex sanitary compartment or an accessible unisex shower need not be provided on a storey or level that is not required by D3.3(f) to be provided with a passenger lift or ramp complying with AS 1428.1.		Not applicable

Details of the non-slip floor finish to the bathrooms will need to be provided.

Position of TMV details are to be provided as part of the Construction Certificate documentation.

Tap sets will need to be specified with lever or capstan handles.

3.9.4. Wall Reinforcement

Provision of wall strengthening for grabrails will need to be provided adjacent to the WC and shower of all accessible sanitary facilities.

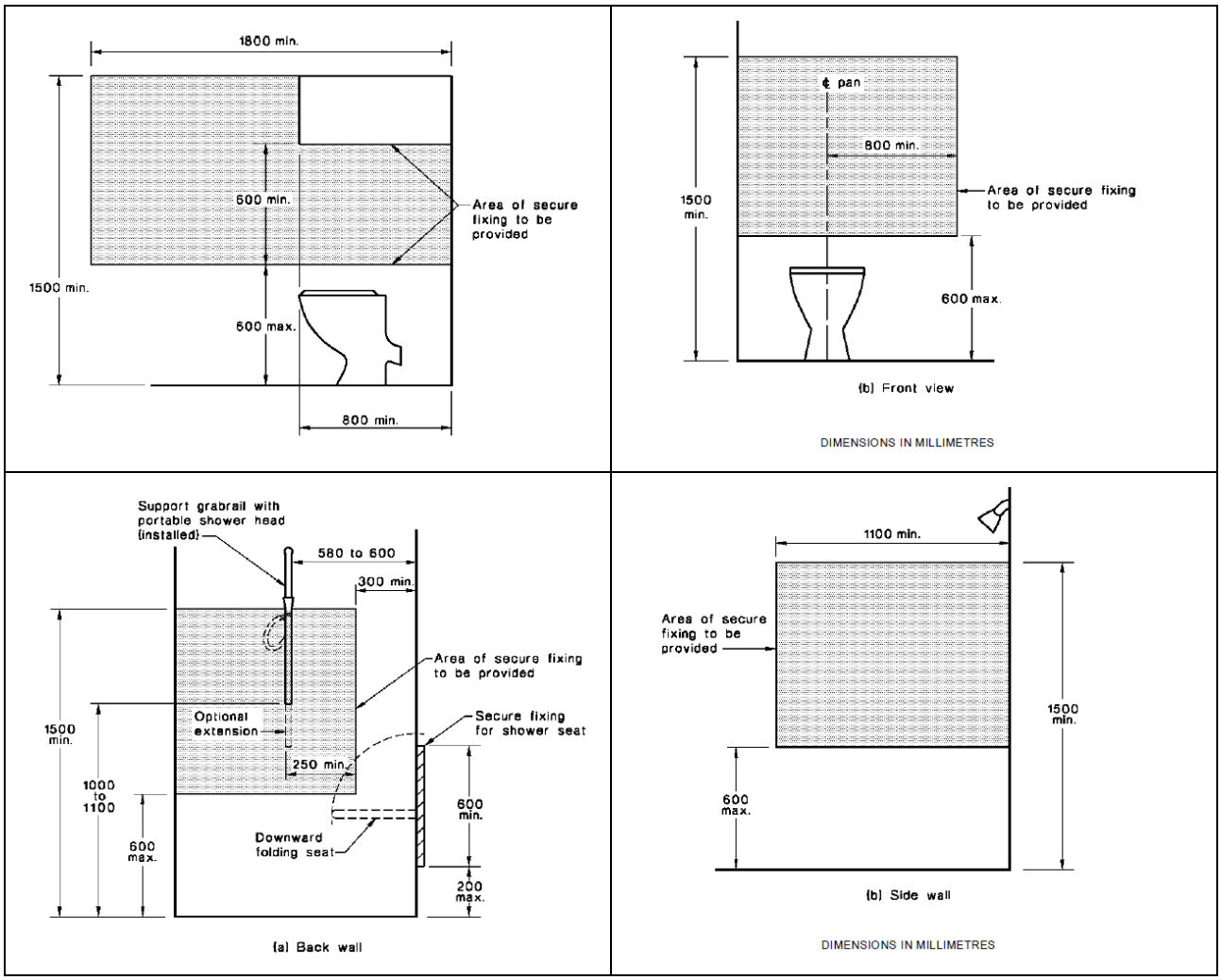

3.9.5. Shower Compartment

The shower compartment will need to have an area of 1160 x 1100mm. The position of the shower rose, tapware and the soap holder recess will need to be compliant to the provisions of Clause 15 of AS1428.1.

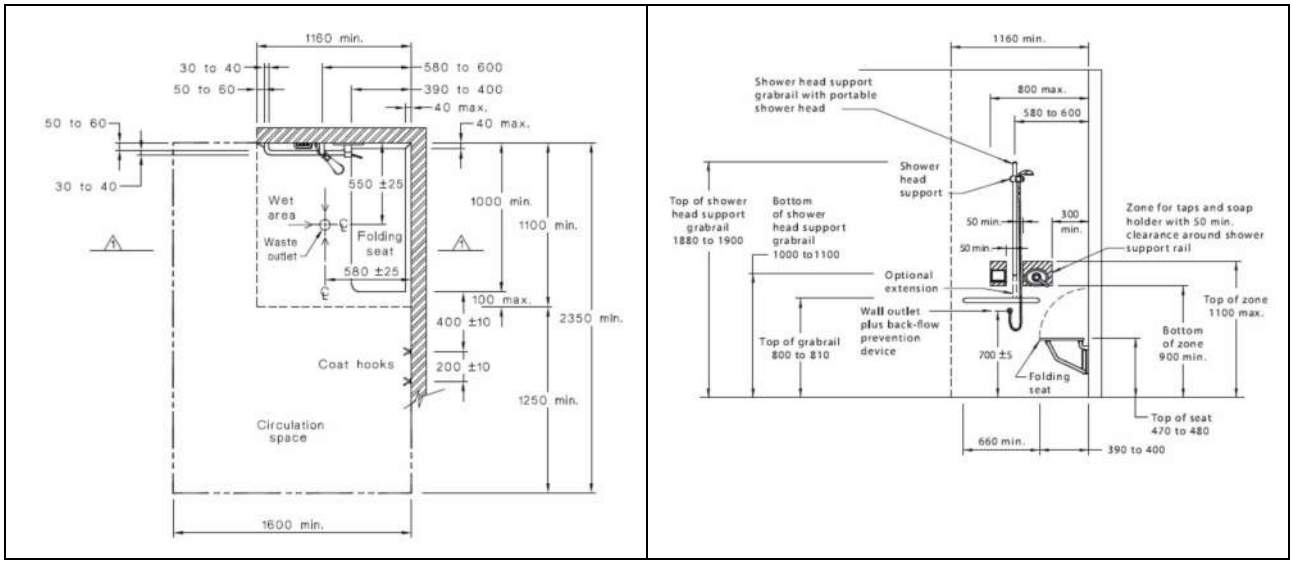

Specific attention is directed to the requirement of the length of the hose associated with the shower rose. The Standard requires the length of the hose to be 1500mm. The placement of the hose connection point results in the possibility of the shower head reaching the WC bowl which is prohibited by the Australian Standards. The detailing of this configuration will need to be resolved as part of the detailed documentation of detailed construction certificate documentation.

3.9.6. Handbasins

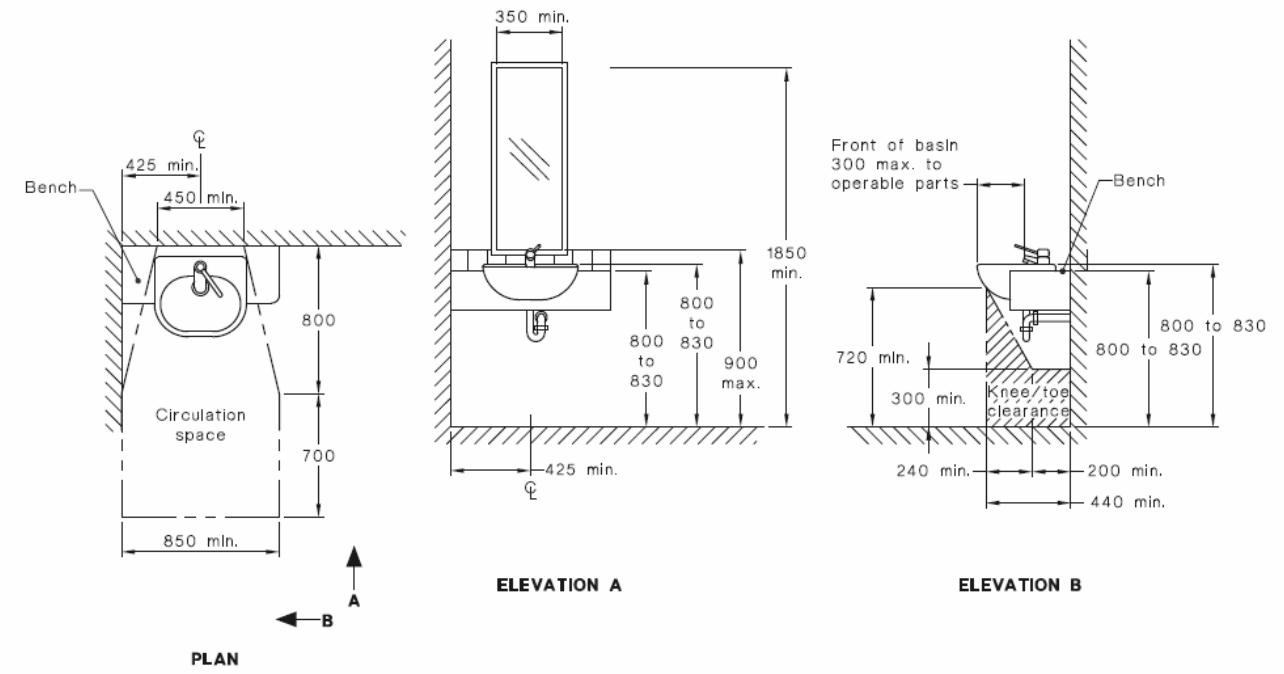

NOTE: 'Operable parts' means the centre-line of the tap, or where a level handle is provided, the end point of the level measure throughout its arc of movement, or where a sensor is provided where the sensor is reliably activated.

DIMENSIONS IN MILLIMETRES

FIGURE 44(A) SEMI-RECESSED WASHBASIN INSTALLATION —OTHER THAN FOR SOLE-0CCUPANCY UNIT

A wash basin with compliant circulation to AS1428.1 will need to be provided.

3.9.7. Toilet Roll Dispensers

The location of toilet roll dispensers shall be fixed within the zone specified in Figure 41 of AS1428.1:2009.

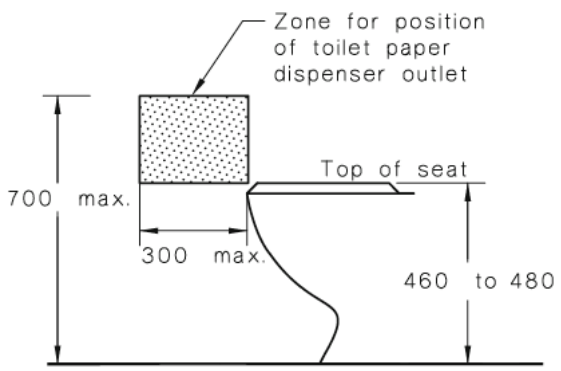

Figure 50 – Fig.41 AS1428.1 2009

Clause 17-Handrails of AS1428.1:2009 specifies the clearance requirement for grabrails.

The clearance between a grabrail and the adjacent wall surface or other obstruction shall be not less than 50 mm and not more than 60 mm. The clearance above a horizontal grabrail shall extend above the top of the grabrail by not less than 600 mm. The clearance below a horizontal or angled rail shall be a minimum of 50 mm except at fixing points.

Grabrails shall be fixed so that there is no obstruction to the passage of the hand along the top 270° arc of horizontal and angled grabrails. There shall be no obstruction to the passage of the hand for the full length of vertical grabrails.

The toilet roll dispenser shall therefore not be installed less than 50mm from underneath the grabrail.

3.9.8. Checklist of Accessible WCs

A checklist of the spatial arrangements to be satisfied for the design of the accessible bathroom is attached to this access report.

The following is a summary of requirements to satisfy the WC provisions of AS1428.1:2009:

• Entry Door	The detailing of the circulation at doorways shall comply with the provisions of Clause 13 of AS1428.1:2009
• Entry door	The luminance contrast provisions at the doorway shall comply with the provisions of Clause 13.1 of AS1428.1:2009
• Force required to operate door	The force required to operate the door if fitted with a door closer is a maximum of 20N. It is assumed that autodoors will not be installed
• Door hardware	The position of door hardware is to be located between 900-1100mm AFFL.
• WC pan circulation	1900×2300mm
• hand basin circulation	850×1500mm, the basin may encroach a maximum of 100 mm into the circulation space of the adjacent WC pan circulation
• WC pan offset from side wall	450/460 mm
• WC pan offset from rear wall	800±10 mm
• WC pan backrest	to code requirements
• WC pan toilet seat	The toilet seat will need to be the full round type, securely fixed in position, be rated 250 KG and have a minimum limits contrast of 30% with the background pan, wall or floor against which it is viewed.
• WC pan grab rails	Grab rail to be mounted 800 mm above finish floor level, length of grab rail to be 1050 mm from rear wall, install 300 mm grab rail to left-hand side of the WC pan. It is assumed that the walls to which the grab rails are fixed will have the required 1100N force rating wall reinforcement required by the standard
• Hand basin mounting height	Top of hand basin to be 800/830 mm above finish floor level
• Hand basin clearances	The clearances around and under the hand basin need to comply with the provisions of clause 15.3 of AES 1428.1:2009. Specific attention is drawn to the plumbing installation where the required clearances under the hand basin necessitate special consideration of the bottle trap associated with the hand basin
• Hand basin selection	The detailing of the hand basin requires the installation of a shelf unit. It may be possible to specify a hand basin that incorporates a shelf section thereby eliminating an additional component to be installed in the USAT
• Hand basin mirror	The mirror is to be flush mounted on the wall above the sink the bottom of the mirror is to be no more than 900 mm above the finish floor level and the top of the mirror is to be a minimum of 1850 mm above the finish floor level

• Hand basin tap	It is recommended that a lever hand basin tap be installed in lieu of the capstan type
• Toilet roll holder	The position of the toilet roll holder is to be in accordance with code requirements
• Coat hooks	Coat hooks can be installed 1200 to 1350 mm above finish floor level and not closer than 500 mm from an internal corner. The coat hook can be installed on the wall or on the back of the door
• Soap dispensers/hand towel	These items are to be able to be operated by one hand and shall be installed so that the tap or dispenser is not less than 900 and not more than 1100 mm above the finish floor level.
• Baby change facility	The plan does not indicate if there is a baby change facility located within this USAT. If a baby change table is installed within this facility, then the unit will need to be installed outside of the WC circulation zone
• Braille Tactile Signage	The detailing of the Braille Tactile Signage will need to comply with the provision of NCC Clause D3.6 and NCC Specification D3.6. The location of the Braille Tactile sign is to be mounted on the latchside wall. The sign is to indicate the handing of the grabrails to the WC Pan. The following is an example of the type of information to be provided in the Braille Tactile Sign. Details of Braille tactile signage are highlighted in the above Signage section of this report.

3.9.9. Ambulant Sanitary Facilities

Where a single toilet or a bank of toilets are provided, ambulant sanitary facilities are required.

If, for example, two unisex single toilets are collocated, only one ambulant sanitary facility is required but if the two single toilets are allocated separately to male and female use then both will need to be ambulant sanitary facilities.

The drawing set does not reflect compliance with this requirement. Additional Information to be provided prior to the issue of the Final Access Certification and Crown Certificate.

Refer to the State Significant Development Application plan mark-ups to review the relevant locations.

The ambulant sanitary facilities require compliance with Clause 16 of AS1428.1:2009.

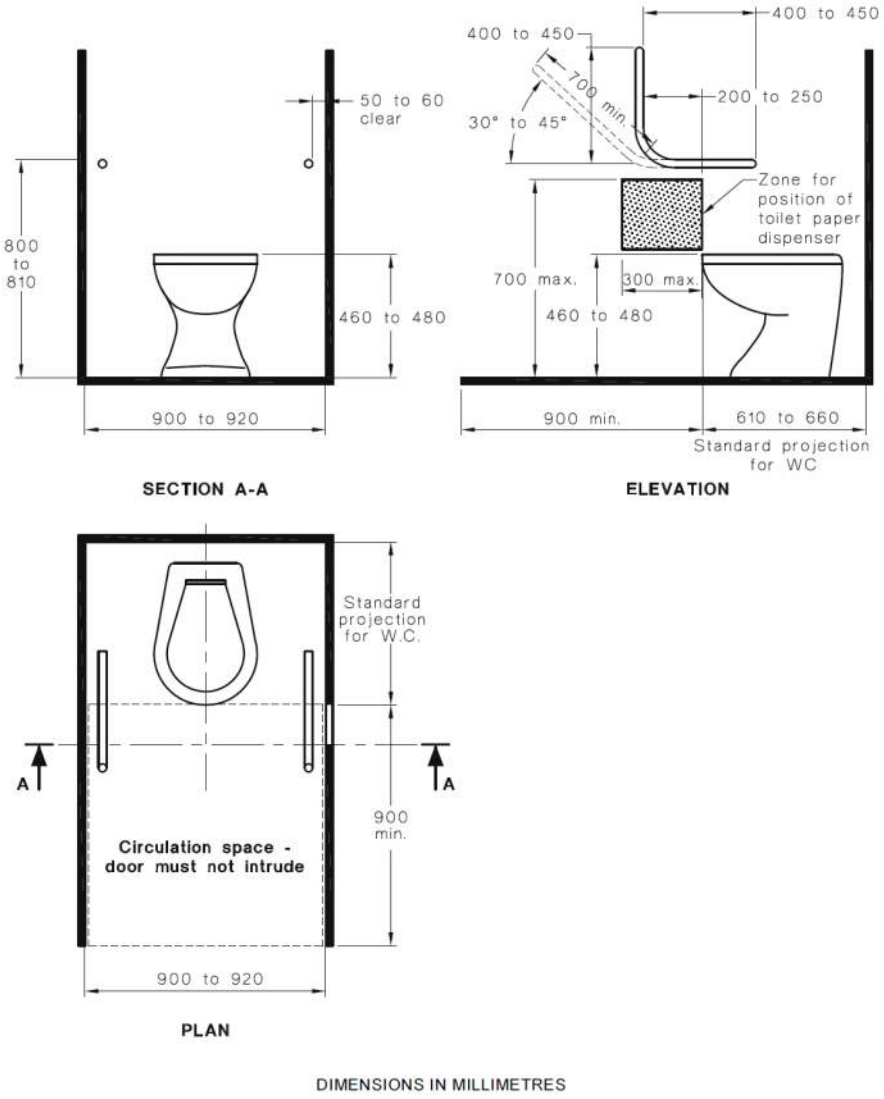

FIGURE 53(A) SANITARY COMPARTMENT FOR PEOPLE WITH AMBULANT DISABILITIES—PLAN AND ELEVATION

Figure 51 – Fig.53A AS1428.1 2009

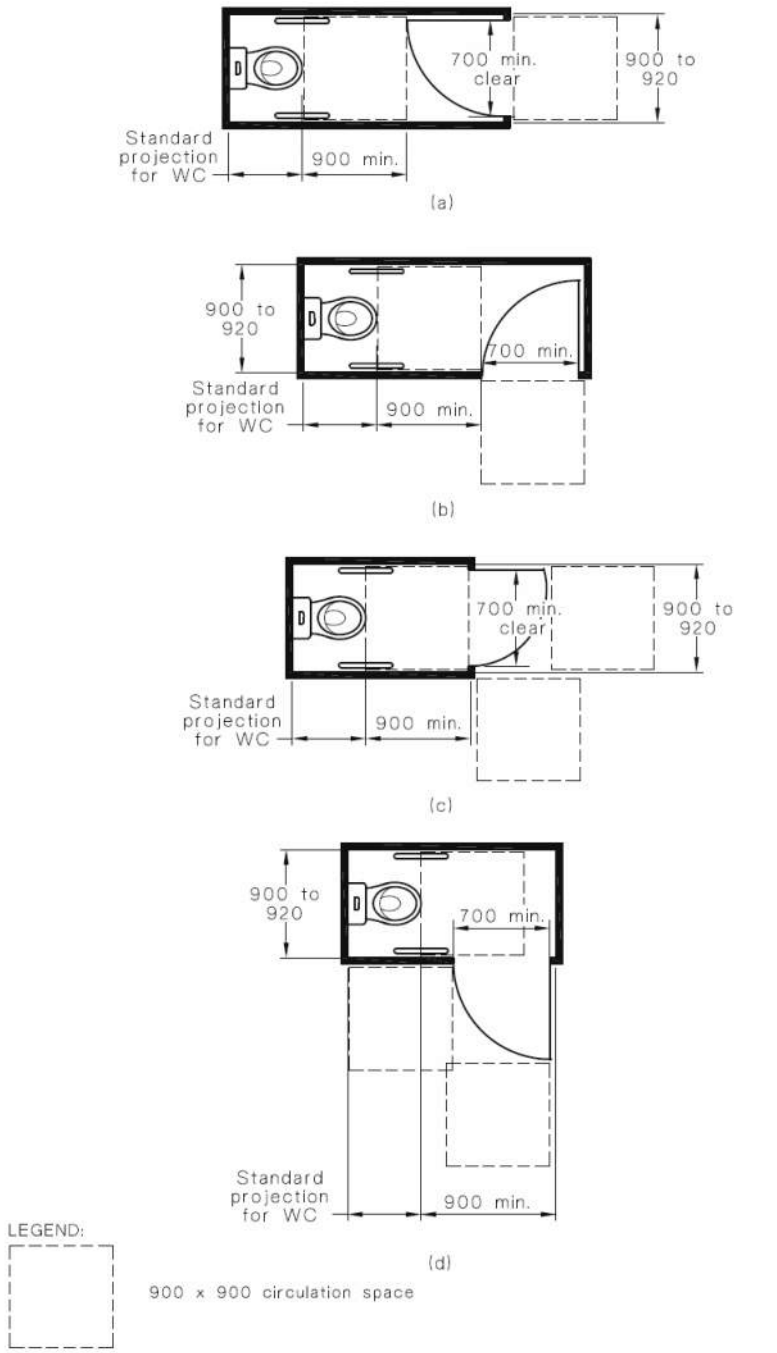

FIGURE 53(B) SANITARY COMPARTMENT FOR PEOPLE WITH AMBULANT DISABILITIES—DOORWAY OPTIONS

Figure 52 – Fig.53B AS1428.1 2009

3.10. Furniture

NCC Reference:	D3.3 Parts of buildings to be accessible
Australian Standard Reference:	24 (Furniture and Fitments) of AS1428.2 1992

3.10.1. Counters

All reception counters associated with the building entrance and triage areas are to include a portion of the counter that is accessible.

The following plan extract highlights this location.

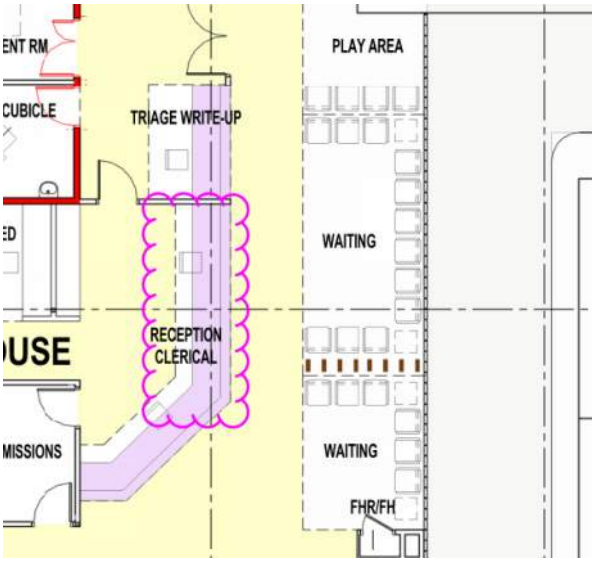

Figure 53 – Extract from Ground Floor Plan

The height of clearance beneath the unit from the finished floor should be 820 ±20 mm.

Where there are two tables/counters provided, the following dimensions apply:

(a) Height from the finished floor to the top of the unit:

(i) 1st unit: 750 ± 20 mm.

(ii) 2nd unit: 850 ± 20 mm.

(b) Height of clearance beneath unit, from the finished floor:

(i) 1st unit: 730 ± 20 mm.

(ii) 2nd unit: 820 ± 20 mm.

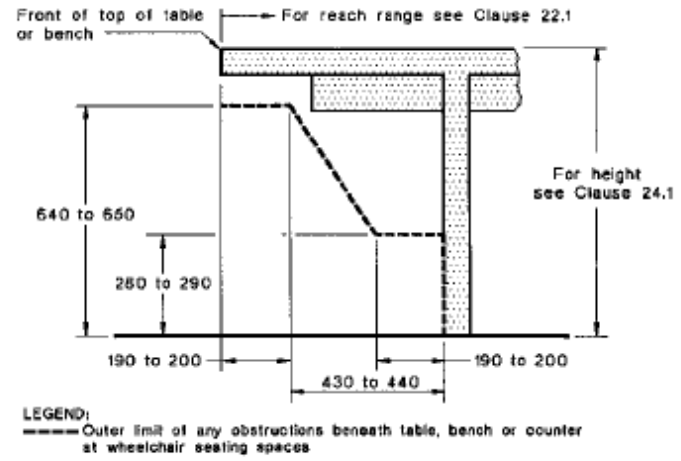

NOTE: For width of seating spaces see Clause 24.1.3.

DIMENSIONS IN MILLIMETRES

FIGURE 25 KNEE AND FOOT CLEARANCE BENEATH A TABLE, BENCH OR COUNTER

Figure 54 – Fig.25 AS1428.2:1992

3.10.2. Seating

If a staff member who is part of the hospital staff has mobility requirements, the hospital policy of modifying the work environment will be implemented.

Note: where possible, the furniture shall not be built in to allow for accommodation of different seating opportunities and spatial allowances for any users who may require enhanced circulation space.

3.10.3. Waiting Areas

All waiting areas require a location for a wheelchair of minimum 1300 x 800mm.

Refer to the plan mark-ups to review these relevant locations.

3.10.4. Lockers

At least one or two lockers in each bank of lockers should be designated for someone with a mobility impairment.

The designated accessible lockers are to be reflected in drawings, with the key opening, locks and handle between 900 – 1100mm AFFL. Refer to the following Sketch that illustrates this zone in blue.

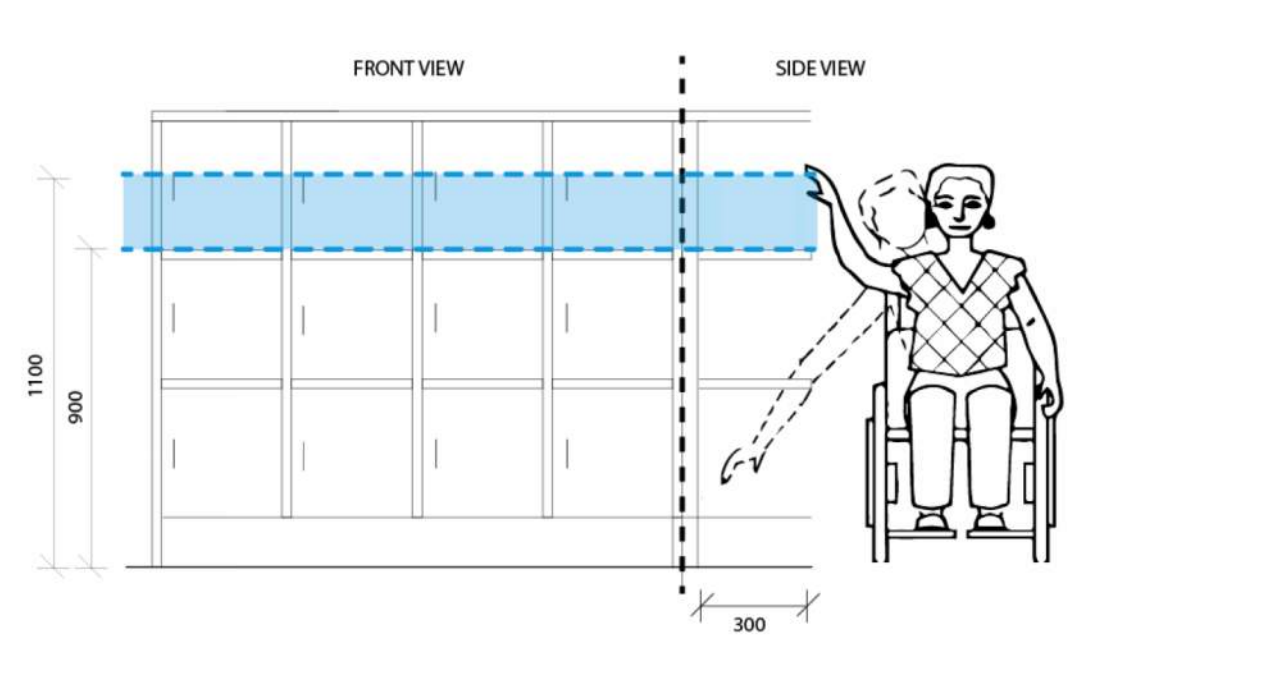

Figure 55 – Sketch by iAccess Consultants

If a staff member requires a locker within a certain reach range, they should be allocated an appropriate locker that best meets their needs.

3.10.5. Beverage Bays

If beverage bays are located within a room, the circulation space within the room will need to comply with the provisions noted in section 3.14.18 of this report, with zones of 1500 x 1500mm to ensure the ability to make a 180deg turn is provided.

The distance between the beverage bay counter and any adjacent wall shall be not less than 1540mm.

Where the beverage bay is located adjacent to a doorway, door circulation requirements apply which are noted in the Doorways section report.

Water ZIP taps shall be located not closer than 500mm from an internal corner.

The following photograph is an example of a ZIP tap that is not 500mm from an internal corner (i.e. is not compliant).

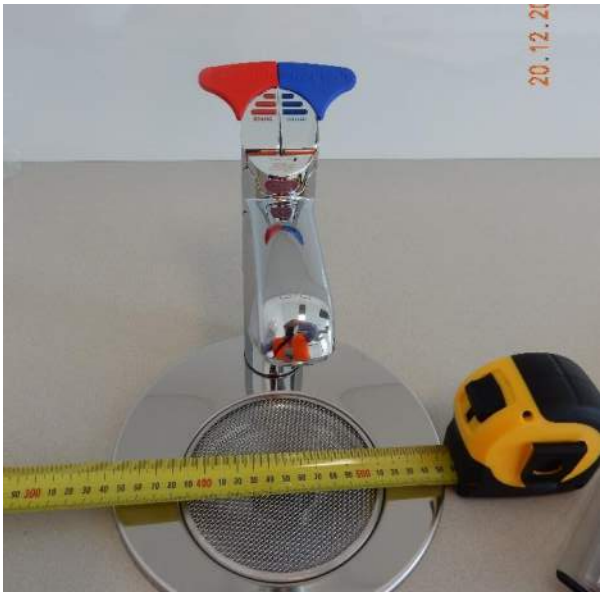

3.10.6. Work Stations

The distance between tables within work stations is to be a minimum of 1650mm.

3.11. Lighting Levels

Australian Standard Reference: Clause 19 of AS1428.2:1992

Appendix D of AS1680.2.1:2008

3.11.1. General

The plans presently do not indicate the minimum lighting levels to be achieved. It will be necessary that the Construction Certificate documentation confirm that the minimum lighting levels nominated by the Australian Standards are achieved.

In additional to the minimum lighting levels identified at Clause 19 of AS1428.2:1992 the provisions of Table D1 of AS168.2.1:2008 which nominates interior light levels to be achieved must be considered.

The following table schedules the lighting levels nominated within the Australian Standards for accessibility:

LOCATION	CLAUSE 19 AS1428.2:1992	APPENDIX D AS1680.2.1:2008
Entrances, passages & walkways	150lx	160lx
Waiting rooms	-	160lx
Corridors Passageways	-	40lx
Ramps	150lx	40lc
Toilets and locker Rooms	200lx	
Counter tops	250lx	320lx
General displays	200-300lx	
Telephones	200lx	
Accessible parking spaces	-	40lx

The electrical documentation will need to indicate compliance with these minimum lighting levels.

3.12. Hearing Augmentation

NCC Reference:	NCC Clause D3.7
	NCC Clause D3.6
	NCC Specification D3.6
Australian Standard Reference:	AS1428.5:2010 Design for access and mobility - Communication for people who are deaf or hearing impaired
	AS1428.4.1:2009
Requirement to be Satisfied:	NCC D3.7 Hearing Augmentation
	A hearing augmentation system must be provided where an inbuilt amplification system, other than one used only for emergency warning, is installed—
	ii. in an auditorium, conference room, meeting room or room for judicatory purposes; or
	iii. at any ticket office, teller's booth, reception area or the like, where the public is screened from the service provider.

3.12.1. General

A hearing augmentation system is to be provided in locations where a built-in amplification system is provided.

A built-in amplification system is a system where either speakers are installed within a room or the wall mounted monitor has built-in speakers. Such installations are typically found in meeting rooms, training rooms and waiting areas.

Where the wall mounted screen is not capable of broadcasting sound and any audio is provided by way of the speakers attached to a laptop or that are portable, the hearing augmentation provisions will not need to be applied.

Rooms with inbuilt communication systems will need to provide with a hearing augmentation system. Additional Information to be provided prior to the issue of the Final Access Certification and Crown Certificate.

Section 2.3 of AS1428.1:2010 highlights the types of hearing augmentation system:

> *Persons with a hearing loss may or may not have a personal hearing aid or a cochlear implant fitted. When choosing an ALS the outcome should enable communication by all people with hearing impairment whether they wear hearing aids, or have hearing aids or cochlear implants without a telecoil (T-switch), or have hearing aids or cochlear implants with a telecoil (T-switch).*
>
> *ALS types include—*
>
> *(a) audio frequency induction loop systems (AFILSs);*
>
> *(b) modulated radio systems (commonly referred to as FM systems); and*
>
> *(c) infra-red (IR) systems.*

Details of the proposed method of hearing augmentation to be installed will need to be provided as part of the detailed documentation provided for this project.

Where hearing Augmentation systems are installed, a Braille Tactile Sign incorporating the international symbol of deafness will need to be provided.

NCC D3.6 identifies the requirement for Braille Tactile Signage to be implemented where a hearing augmentation system is installed.

> *(b) signage including the international symbol for deafness in accordance with AS1428.1 must be provided within a room containing a hearing augmentation system identifying –*
>
> > *(i) the type of hearing augmentation; and*
> >
> > *(ii) the area covered within the room; and*
> >
> > *(iii) if receivers are being used and where the receivers can be obtained*

Refer to the previous section of this report for details of Braille Tactile Signage requirements.

3.13. Vertical Transport

NCC Reference:	D3.3 Parts of buildings to be accessible
	E3.6 Passenger Lifts
Australian Standard Reference:	AS1735.12 1999 Lifts, Escalators and Moving Walks

3.13.1. General

The new building includes two (2) passenger lifts.

3.13.2. Lift Car Dimensions

The minimum clear open width of the lift door shall be 900mm.

The minimum lift car dimension to satisfy the requirements of NCC Part E is as follows:

- Passenger Lifts 1100 x 1400mm (Lift travel less than 12m)

Details of the lift are to be provided. Additional Information to be provided prior to the issue of the Final Access Certification and Crown Certificate.

3.13.3. Call buttons

The detailing of the lift cars will need to satisfy the requirements of NCC Clause E3.6, the provisions of AS1735.12 and the placement of call buttons to comply with Clause 14 of AS1428.1:2009.

Attention is directed to the placement of the lift call button at each level. Many lift suppliers are locating the call button for single lift car installations in the jamb of the lift door assembly. If this surface is not flush with the adjoining wall the position of the button is not complainant with the provisions of Clause 14 of AS14281:2009. This clause requires switches not to be located within 500mm of an internal corner.

The lift call button in this case should be located on the right of the lift door as indicated in the plan extract below:

Image References:

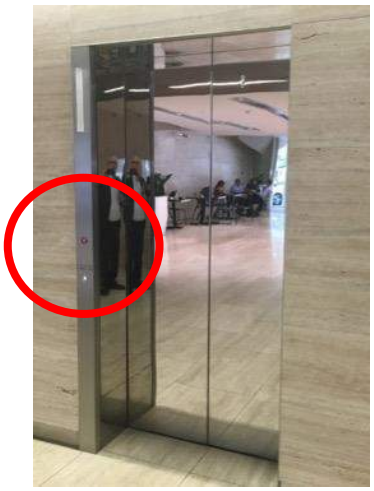

Figure 56 - Image of non-compliant lift call button installation	*Figure 57 -Image of compliant lift call button installation*
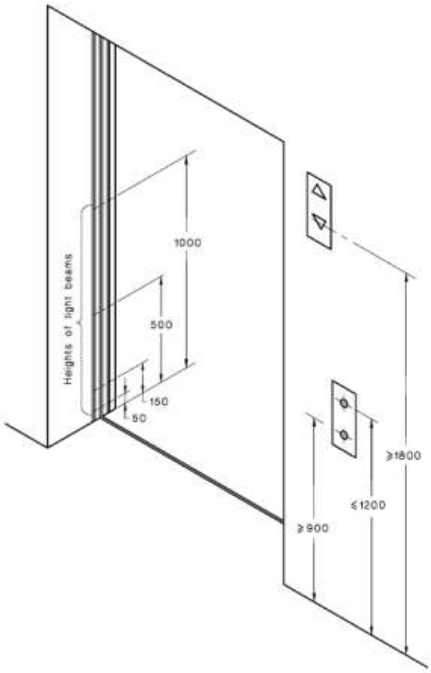 DIMENSIONS IN MILLIMETRES FIGURE A1 TYPICAL ARRANGEMENT OF A LIFT ENTRANCE	
Figure 58 – Fig.A1 AS35.12 1999	

For placement of buttons, handrails and the like, we rely upon verification of compliance with AS1735.12 from the lift manufacturer.

4 DISABILITY (ACCESS TO PREMISES) STANDARDS 2010- COMPLIANT REPORT

PART / CLAUSE	DISABILITY (ACCESS TO PREMISES) STANDARD 2010 CRITERIA TO BE SATISFIED	COMPLIANCE	ACTION / COMMENT
A4.1	**Classifications** **Class 9a** — Health Care building	Note	
DP1	**Performance requirement** Access must be provided, to the degree necessary, to enable: a) people to: i . approach the building from the road boundary and from any *accessible* carparking spaces associated with the building; and	Additional Information to be provided prior to the issue of the Final Access Certification and Crown Certificate.	
	ii. approach the building from any accessible associated building; and	Additional Information to be provided prior to the issue of the Final Access Certification and Crown Certificate.	
	iii. access work and public spaces, accommodation and facilities for personal hygiene; and	Satisfied	
	b) Identification of accessways at appropriate locations which are easy to find.	Satisfied	

PART / CLAUSE	DISABILITY (ACCESS TO PREMISES) STANDARD 2010 CRITERIA TO BE SATISFIED	COMPLIANCE	ACTION / COMMENT
DP4	**Performance requirement** *Exits* must be provided from a building to allow occupants to evacuate safely, with their number, location and dimensions being appropriate to: a) the travel distance; and b) the number, mobility and other characteristics of occupants; and c) the function or use of the building; and d) the height of the building; and e) Whether the *exit* is from above or below ground level.	Additional Information to be provided prior to the issue of the Final Access Certification and Crown Certificate.	
DP6	**Performance requirement** So that occupants can safely evacuate the building, *accessways* to *exits* must have dimensions appropriate to: a) the number, mobility and other characteristics of occupants; and b) the function or use of the building.	Additional Information to be provided prior to the issue of the Final Access Certification and Crown Certificate.	
DP8	**Performance requirement** Carparking spaces for use by people with a disability must be: 1. provided, to the degree necessary, to give equitable access for carparking; and 2. designated and easy to find.	Additional Information to be provided prior to the issue of the Final Access Certification and Crown Certificate.	

PART / CLAUSE	DISABILITY (ACCESS TO PREMISES) STANDARD 2010 CRITERIA TO BE SATISFIED	COMPLIANCE	ACTION / COMMENT
DP9	**Performance requirement** An inbuilt communication system for entry, information, entertainment, or for the provision of a service, must be suitable for occupants who are deaf or hearing impaired.	Additional Information to be provided prior to the issue of the Final Access Certification and Crown Certificate.	
D3.1	**General Building Access Requirements Class 9a — Health Care Building**		
Table D3.1	To and within all areas normally used by the occupants.	Satisfied	
D3.2	**Access to Buildings**		
	(1) An *accessway* must be provided: (a) to a building *required* to be *accessible*;	Satisfied	
	(b) from the main points of a pedestrian entry at the allotment boundary; and	Satisfied	
	I. from another *accessible* building connected by a pedestrian link; and	Additional Information to be provided prior to the issue of the Final Access Certification and Crown Certificate.	

PART / CLAUSE	DISABILITY (ACCESS TO PREMISES) STANDARD 2010 CRITERIA TO BE SATISFIED	COMPLIANCE	ACTION / COMMENT
	II. from any required accessible carparking space on the allotment.	Additional Information to be provided prior to the issue of the Final Access Certification and Crown Certificate.	
	(2) In a building *required* to be *accessible,* an *accessway* must be provided through the principal pedestrian entrance, and: a. through not less than 50% of all pedestrian entrances including the principal pedestrian entrance; and b. in a building with a total *floor area* more than 500sqm, a pedestrian entrance which is not *accessible* must not be located more than 50 m from an *accessible* pedestrian entrance; Except for pedestrian entrances serving only areas exempted by clause D3.4.	Satisfied	
D3.3	**Parts of buildings to be accessible**		
	In a building *required* to be *accessible*: a) every ramp and stairway, except for ramps and stairways in areas exempted by clause D3.4, must comply with:		
	i. for a ramp, except a fire-isolated ramp, clause 10 of AS 1428.1; and	Not Applicable	

PART / CLAUSE	DISABILITY (ACCESS TO PREMISES) STANDARD 2010 CRITERIA TO BE SATISFIED	COMPLIANCE	ACTION / COMMENT
	ii. for a stairway, except a fire-isolated stairway, clause 11 of AS 1428.1;	Additional Information to be provided prior to the issue of the Final Access Certification and Crown Certificate.	
	iii. for a fire-isolated stairway, clause 11.1(f) and (g) of AS 1428.1;	Additional Information to be provided prior to the issue of the Final Access Certification and Crown Certificate.	
	b) every passenger lift must comply with clause E3.6;	Additional Information to be provided prior to the issue of the Final Access Certification and Crown Certificate.	

PART / CLAUSE	DISABILITY (ACCESS TO PREMISES) STANDARD 2010 CRITERIA TO BE SATISFIED	COMPLIANCE	ACTION / COMMENT
	c) *accessways* must have: i. passing spaces complying with AS 1428.1 at maximum 20 m intervals on those parts of an accessway where a direct line of sight is not available; and ii. turning spaces complying with AS 1428.1: A. within 2m of the end of *accessways where* it is not possible to continue travelling along the *accessway*; and B. at maximum 20 m intervals along the *accessway*;	Satisfied	
	d) an intersection of *accessways* satisfies the spatial requirements for a passing and turning space;	Satisfied	
	e) a passing space may serve as a turning space;	Satisfied	
	f) a ramp complying with AS 1428.1 or a passenger lift need not be provided to serve a *storey* or level other than the entrance *storey* in a Class 5, 6, 7b or 8 building- (i) containing not more than 3 *storeys*; and (ii) with a *floor area* for each *storey*, excluding the entrance *storey*, of not more than 200sqm.	Not Applicable	
D3.5	**Carparking**	Additional Information to be provided prior to the issue of the Final Access Certification and Crown Certificate.	

PART / CLAUSE	DISABILITY (ACCESS TO PREMISES) STANDARD 2010 CRITERIA TO BE SATISFIED	COMPLIANCE	ACTION / COMMENT
D3.6	**Signage**	Additional Information to be provided prior to the issue of the Final Access Certification and Crown Certificate.	
D3.7	**Hearing Augmentation**	Additional Information to be provided prior to the issue of the Final Access Certification and Crown Certificate.	
D3.8	**Tactile Indicators**	Additional Information to be provided prior to the issue of the Final Access Certification and Crown Certificate.	
D3.9	**Wheelchair seating**	Not Applicable	
D3.10	**Swimming pool**	Not Applicable	
D3.11	**Ramps (Connecting Ramps)**	Not Applicable	

PART / CLAUSE	DISABILITY (ACCESS TO PREMISES) STANDARD 2010 CRITERIA TO BE SATISFIED	COMPLIANCE	ACTION / COMMENT
D3.12	**Glazing on an accessway** On an *accessway*, where there is no chair rail, handrail or transom, all frameless or fully glazed doors, sidelights and any glazing capable of being mistaken for a doorway or opening, must be clearly marked in accordance with Clause 6.6 of AS 1428.1.	Additional Information to be provided prior to the issue of the Final Access Certification and Crown Certificate.	If full-height glazing is provided, visual indicators are required.
Part D4	**Braille & Tactile Signs**	Satisfied	The signage detailing will need to comply with the provisions of Clause D3.6 and Specification D3.6 of the BCA as well as Clauses 16.3 and 17 of AS1428.2 which addresses the size of the pictogram as well as the height of lettering.
Part E3	**Lift Installation**	Additional Information to be provided prior to the issue of the Final Access Certification and Crown Certificate.	
Part F2	**Sanitary and other facilities**	Additional Information to be provided prior to the issue of the Final Access Certification and Crown Certificate.	

5 APPENDIX

Appendix 1 – Clause 16 & Clause 17 AS1428.4.2 1992

The Australian Standard addressing design for access and mobility Clause 16 Symbols and Clause 17 Signs (AS1428.4.2:1992) specifies the dimensions and placement of signage:

16.1 International symbol for access *The form and use of the international symbol for access shall comply with AS1428.1.*

16.2 International symbol for deafness *The form of the international symbol for deafness shall be as follows:*

(a) The symbol for deafness shall consist of two elements, viz. a stylized ear and diagonal slash on a plain square background.

(b) The proportional layout of the symbol for deafness shall be in accordance with Figure 19.

(c) The colour of the symbol shall be white on a blue background. The blue shall be B21, UltraMarine of AS 2700 or similar.

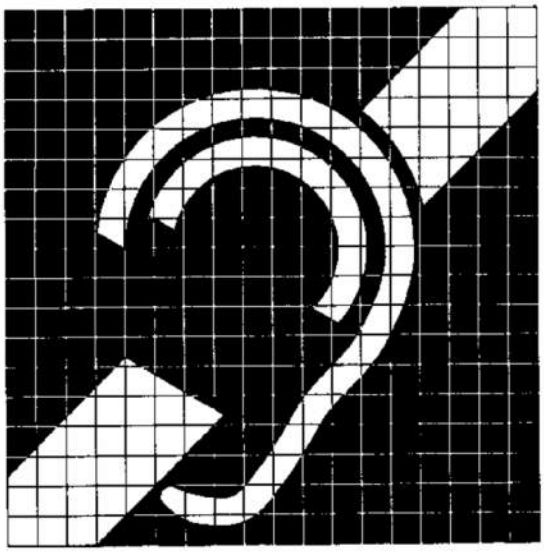

FIGURE 19 PROPORTIONAL LAYOUT FOR INTERNATIONAL SYMBOL FOR DEAFNESS

16.3 Size of international symbols for access and deafness access *The size of the international symbols for access and deafness access shall be not less than that given in Table 1.*

TABLE 1
SIZE OF INTERNATIONAL SYMBOLS FOR ACCESS AND DEAFNESS FOR VARYING VIEWING DISTANCES

Required viewing distance m	Minimum size of symbol mm
≤7	≥ (60 x 60)
>7 ≤18	≥ (110 x 110)
>18	≥ (200 x 200)
	≥ (450 x 450)

17.2 Height of letters in signs

The height of letters in signs shall be not less than that given in Table 2.

TABLE 2
HEIGHT OF LETTERS FOR VARYING VIEWING DISTANCES

Required viewing distance m	Minimum height of letters* mm
2	6
4	12
6	20
8	25
12	40
15	50
25	80
35	100
40	130
50	150

* For further information on the heights of letters for different situations, reference should be made to AS 1744.

NOTE: Helvetica Medium typeface is preferred.

17.3 Illumination of signs

Illumination of signs shall be provided in accordance with Clause 19 for general displays.

Lighting shall be placed so that unwanted reflections shall not occur on the sign.

The luminance factor of the surface of numbers, letters or symbols shall be not less than 0.3 (30 percent) different from their background.

17.4 Location of signs

Signs including symbols, numbering and lettering shall be located as follows:

(a) Where they are clearly visible to people in both a seated and standing position (see Clause 25).

NOTES:

1 Signs should be placed within a zone at a height not less than 1400 mm and not more than 1600 mm above the plane of the finished floor. Where space in this zone is used up, the zone for placement of signs may be extended downward to not less than 1000 mm from the plane of the finished floor. This height assists people to read from either a seated or a standing position, and also assists people with low vision to read the information on the sign. Letters and symbols in relief assist people with severe visual disabilities.

Appendix 2 – Clause 8 AS1428.4.1 2009

The Australian Standard addressing design from access and mobility (AS1428.4.1:2009) Clause 8 Signage

8.1 Form of signs

The BCA contains requirements for Braille and tactile signage in Specification D3.6.

Where signs are required, the form of signs shall be as follows:

(a) Where required, raised tactile and/or Braille signage shall be provided as follows:

(i) Sanitary facilities shall be identified with the following:

(A) Raised and visual versions of the international symbol of access.

(B) Raised and visual versions of the male and female symbols.

(C) Raised text that shall be in title case (e.g. Male Toilet).

NOTE: Title case has the first letter of each word capitalized and the rest are lower case. Short articles, prepositions and conjunctions are not capitalized.

(D) Braille that fully describes the visual information displayed by symbols and raised text.

NOTES:

1 For example, a sign for a male accessible toilet will include the words Male Toilet as visual, raised text and Braille as well as the raised visual male symbol.

2 An example of a sign is given in Figure 9(a).

(ii) Signs for unisex accessible facilities shall be provided with the letters LH or RH to indicate a left-hand or right-hand side transfer onto the WC pan. The minimum font size shall be 20 mm san serif.

NOTES:

1 An example of right-hand side (RH) transfer is shown on Figure 9(a).

2 Helvetica and Arial are san serif fonts.

(iii) Entry doors to airlocks serving areas containing sanitary facilities shall be identified by the use of raised text and Braille, together with raised and visual symbols identifying each sanitary facility within.

NOTES:

1 One symbol for each facility need only be used.

2 Where the facilities for male and female are separate, a dividing line should be placed between each symbol.

(b) Elements of a sign shall be set out singularly, or in a modular form.

NOTE: Examples of modular form are shown in Figures 9(a), 9(d), 9(e) and 9(f).

(c) Elements of a sign shall be arranged horizontally or vertically and shall include raised text and Braille, together with raised and visual symbols. Where words

are used, they shall be displayed horizontally.

NOTE: Other symbols may be used in association with the text.

(d) Facilities shall be identified by the use of raised text, Braille, and symbols if required. The identification shall be between 1200 mm and 1600 mm above finished floor levels.

(e) A sanitary compartment for people with ambulant disabilities shall be identified in accordance with Figure 9(c).

Braille shall be Unified English Braille (UEB), Grade 1, uncontracted, and shall be in accordance with the technical specifications set out by the Australian Braille Authority (ABA). Braille numerals shall be preceded by a Braille numerical sign.

The International Symbol of Access and the International Symbol for Deafness (see Clause 8.2.2) may be used without raised explanatory text such as 'accessible' or 'hearing loop installed'.

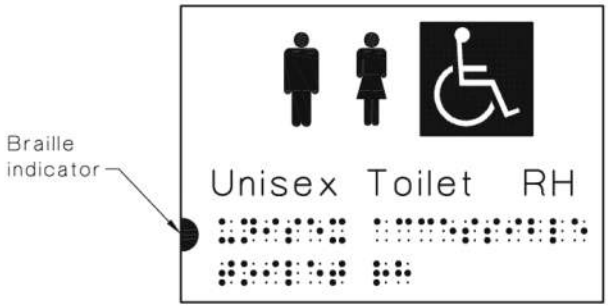

(a) Example of identification sign for a unisex accessible toilet with a right-hand (RH) transfer

NOTES:

1 The Braille indicator is only used where there are multiple lines of text. It indicates the location of the first line of Braille.

2 Visual message: The sign displays a unisex accessible toilet with right-hand (RH) transfer.

3 Minimum required raised tactile message: 'Unisex Toilet RH' in raised tactile print and symbols.

4 Minimum required Braille message: 'Unisex accessible toilet RH' for right-hand transfer.

FIGURE 9 (in part) MODULAR FORM OF SIGNS

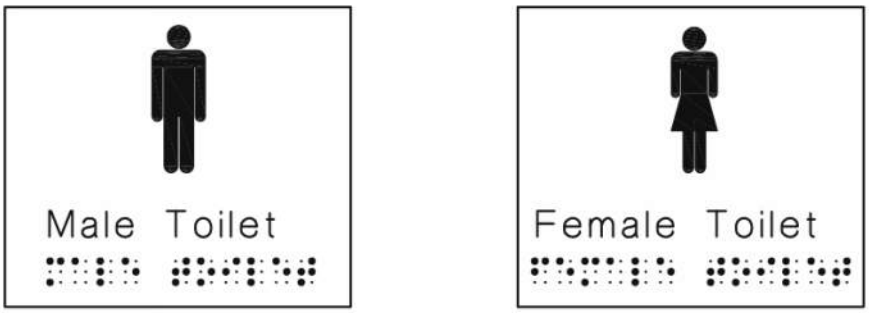

(b) Example of identification signs for male and female toilets

NOTES:

1 Visual message: The signs display male toilet and female toilet.

2 Minimum required raised tactile message: 'Male Toilet', 'Female Toilet' in raised tactile print and symbols.

3 Minimum required Braille message: 'Male Toilet', 'Female Toilet'.

FIGURE 9 (in part) MODULAR FORM OF SIGNS

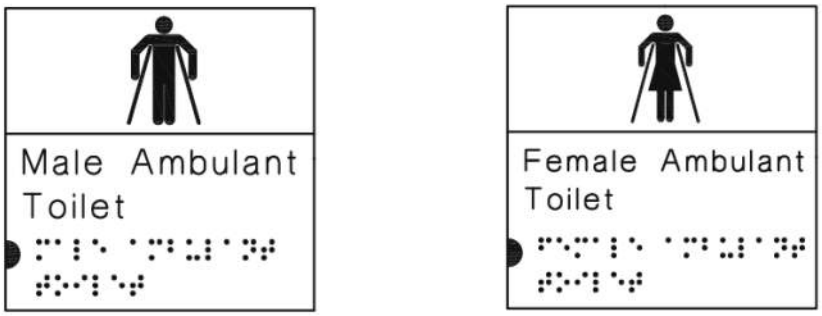

(c) Example of identification signs for ambulant accessible male and female toilets

NOTES:

1 Visual message: The signs display ambulant accessible male and female toilets.

2 Minimum required raised tactile message: 'Ambulant Male Toilet', 'Ambulant Female Toilet' in raised tactile print and symbols.

3 Minimum required Braille message: 'Male Ambulant Toilet', 'Female Ambulant Toilet'.

FIGURE 9 (in part) MODULAR FORM OF SIGNS

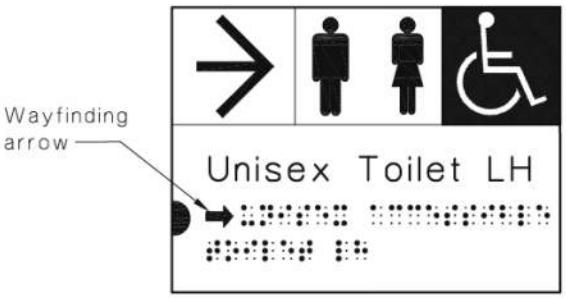

(d) Example of wayfinding sign to a unisex accessible toilet with left-hand (LH) transfer

NOTES:

1 Visual message: The sign displays the direction to a unisex accessible toilet with left-hand (LH) transfer.

2 Minimum required tactile message: 'Unisex Toilet LH' with raised tactile wayfinding arrow, print and symbols.

3 Minimum required Braille message: 'Unisex accessible toilet LH' with a wayfinding arrow of Braille cell proportion.

FIGURE 9 (in part) MODULAR FORM OF SIGNS

(e) Example of wayfinding sign to a unisex accessible toilet

NOTES:

1 Visual message: The sign displays an accessible path of travel using a lift to level 3 to a unisex accessible toilet.

2 Minimum required tactile message: 'Unisex Toilet Level 3' with raised tactile symbols and print.

3 Minimum required Braille message: 'Unisex accessible toilet on Level 3' with a wayfinding arrow of Braille cell proportion.

FIGURE 9 (in part) MODULAR FORM OF SIGNS

8.2 Symbols indicating access for people with disabilities

8.2.1 International symbol of access

The form of the international symbol of access shall be as follows:

(a) *The symbol of access shall consist of two elements: a stylized figure in a wheelchair pointing to the right on a plain square background.*

(b) *The proportional layout of the symbol of access shall be in accordance with Figure 10.*

(c) *The colour of the Figure shall be white on a blue background in accordance with Figure 11. The blue shall be B21, ultramarine, of AS 2700, or similar.*

(d) *For signs indicating the direction to a facility, an arrow shall be used in combination with the international symbol of access.*

NOTE: Signs identifying a facility may be used either with or without directional arrows.

NOTE: The grid is for positional purposes only.

FIGURE 10 PROPORTIONAL LAYOUT FOR INTERNATIONAL SYMBOL OF ACCESS

FIGURE 11 COLOUR CONTRAST FOR SYMBOL OF ACCESS

8.2.2 International symbol for deafness

The form of the international symbol for deafness shall be as follows:

(a) *The symbol for deafness shall consist of two elements: a stylized ear and diagonal slash on a plain square background.*

(b) *The proportional layout of the symbol for deafness shall be in accordance with Figure 12.*

(c) *The colour of the symbol shall be white on a blue background. The blue shall be B21, ultramarine, of AS 2700, or similar.*

NOTE: The grid is for positional purposes only.

FIGURE 12 PROPORTIONAL LAYOUT FOR INTERNATIONAL SYMBOL FOR DEAFNESS

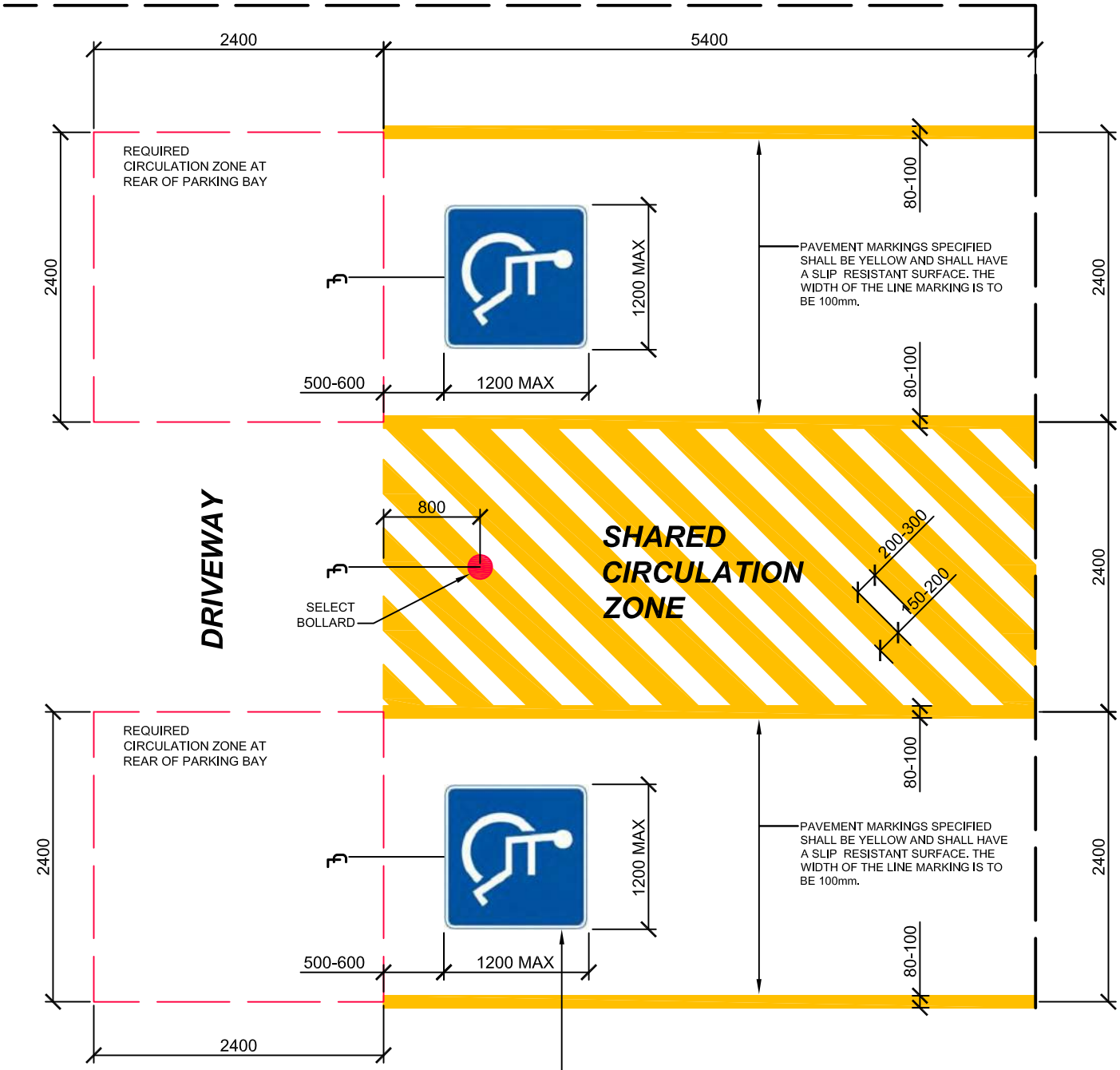

EACH DEDICATED SPACE SHALL BE IDENTIFIED BY MEANS OF A WHITE SYMBOL OF ACCESS IN ACCORDANCE WITH AS 1428.1 BETWEEN 800mm AND 1000mm HIGH PLACED ON A BLUE RECTANGLE WITH NO SIDE MORE THAN 1200mm, PLACED AS A PAVEMENT MARKING IN THE CENTRE OF THE SPACE BETWEEN 500mm AND 600mm FROM ITS ENTRY POINT.

THE BLUE BACKGROUND SHALL BE B21-ULTRAMARINE OF AS2700 OR SIMILAR.

1 ACCESSIBLE PARKING SPACES

PLAN VIEW Scale: 1:50@A4

ACCESSIBLE PARKING SIGN TO BE POLE FIXED OR MOUNTED ON WALL. BOTTOM OF SIGN TO BE MOUNTED 1200mm AFFL.
THE BLUE BACKGROUND SHALL BE B21-ULTRAMARINE OF AS2700 OR SIMILAR.

SIGNS MAY BE EQUAL TO RMS STANDARD SIGNAGE.

2 ACCESSIBLE PARKING SIGN

Scale: NTS

NOTE: The grid is for positional purposes only.

THE ABOVE DETAIL INDICATES THE PROPORTIONAL SETOUT OF THE INTERNATIONAL SYMBOL OF ACCESS AS DESIGNATED IN AS1428.1

3 ACCESSIBLE SYMBOL SETOUT

Scale: NTS

iAccess Consultants
2/20 BALFOUR ROAD
ROSE BAY, NSW 2029
[P] 0408 627 908
[E] r.seidman@iaccessconsultants.com
[W] www.iaccessconsultants.com

TITLE: ACCESSIBLE PARKING - PERPENDICULAR LINE MARKING SETOUT

DWG.No. ####

PLOTTED: 21/11/2014

TECHNICAL SHEET

DATE: OCT 2014 | SCALE: AS SHOWN | STAGE: - | DRAWN: RAS | TYPE: - | REVISION: [-]

A20

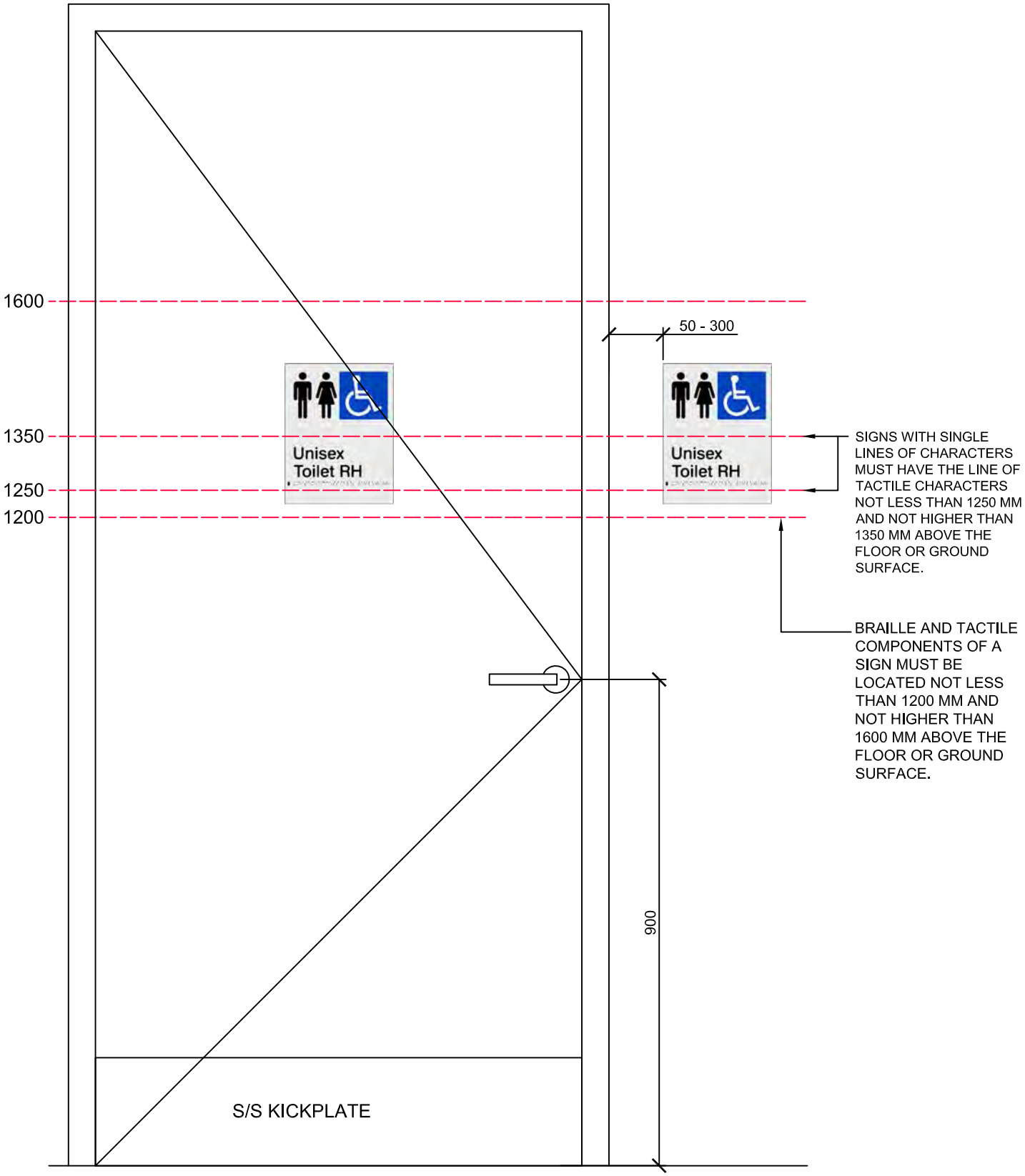

1 ACCESSIBLE DOOR SIGN

Scale: 1:10@A4

THE LOCATION OF THE SIGN IS PREFERRED TO BE LOCATED ON THE LATCH SIDE OF THE DOOR. WHERE THIS IS **NOT POSSIBLE** THE SIGN MAY BE LOCATED ON THE DOOR.

iaccess consultants	iAccess Consultants 2/20 BALFOUR ROAD ROSE BAY, NSW 2029 [P] 0408 627 908 [E] r.seidman@iaccessconsultants.com [W] www.iaccessconsultants.com		TITLE: DOOR SIGNAGE SETOUT		TECHNICAL SHEET DATE: OCT 2014 / SCALE: AS SHOWN STAGE: - / DRAWN: RAS		D3.6
			DWG.No. ####	PLOTTED: 03/11/2014	TYPE: -	REVISION: [-]	

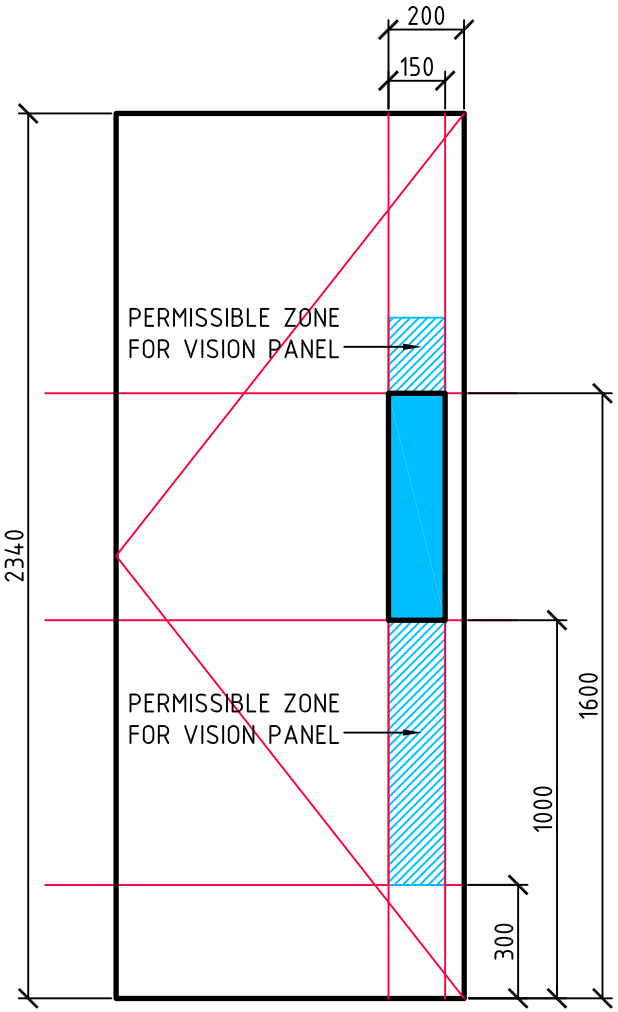

MINIMUM GLAZED AREA FOR VISION PANEL IN A NON FIRE RATED DOOR PANEL TO COMPLY WITH THE INTENTION OF AS1428.2 - CLAUSE 11.6.2

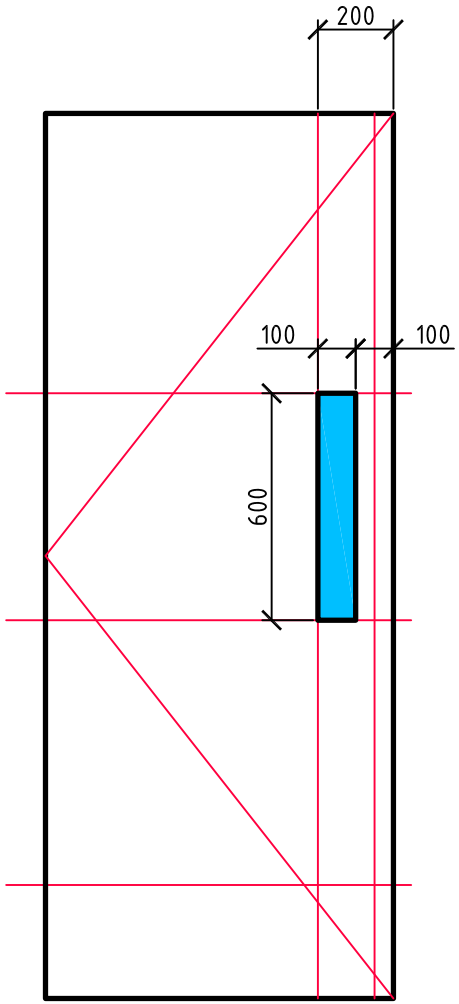

LOCATION OF STANDARD 600x100mm FIRE RATED VISION PANEL TO COMPLY WITH THE INTENTION OF AS1428.2 - CLAUSE 11.6.2

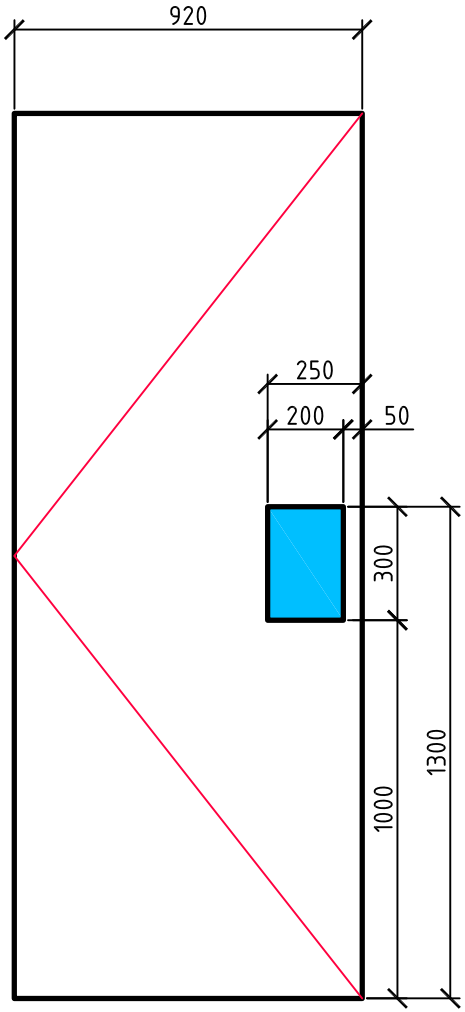

LOCATION OF STANDARD 300x200mm FIRE RATED VISION PANEL TO COMPLY WITH THE INTENTION OF AS1428.2 - CLAUSE 11.6.2

EXTRACT FROM AS 1428.2:1992
11.6.2 GLAZING IN JOINERY DOORS OR FLUSH DOORS

GLAZING IN JOINERY DOORS OR FLUSH DOORS SHALL BE AS FOLLOWS:

a. THE LOWER EDGE OF THE GLAZING SHALL BE NOT LESS THAN 300mm AND NOT MORE THAN 1000mm ABOVE THE BOTTOM EDGE OF THE DOOR.

b. THE UPPER EDGE OF THE GLAZING SHALL BE NOT LESS THAN 1600mm ABOVE THE BOTTOM EDGE OF THE DOOR.

c. IN WIDTH, THE GLAZING SHALL EXTEND NOT MORE THAN 200mm FROM THE LATCH EDGE OF THE DOOR AND SHALL BE NOT LESS THAN 150mm WIDE.

NOTE: GLAZING IN DOORS IS USEFUL TO PEOPLE WITH DISABILITIES AS IT PROVIDES A VIEW OF A USER APPROACHING THE DOOR FROM THE OTHER SIDE. THE LOWER PERIMETERS OF GLAZING ARE SET TO AVOID THE FOOTREST OF A WHEELCHAIR CONTACTING THE GLASS.

THE INSTALLATION OF STANDARD VISION PANELS IN FIRE RATED ASSEMBLIES NEED TO COMPLY WITH THE MANUFACTURERS TESTED ASSEMBLIES.

THE TOTAL AREA FOR VISION PANELS IN FIRE RATED DOORS IS TO BE LESS THAN 65,000sqmm.

THE STANDARD AVAILABLE FIRE RATED VISION PANELS ARE:

- 600 X 100
- 300 X 200
- 450 X 150

THE INSTALLATION OF VISION PANELS IN FIRE RATED DOORS WILL NOT COMPLY WITH EVERY ASPECT OF THE PROVISIONS OF AS1428.2:1992

iAccess Consultants
2/20 BALFOUR ROAD
ROSE BAY, NSW 2029
[P] 0408 627 908
[E] r.seidman@iaccessconsultants.com
[W] www.iaccessconsultants.com

REV	DATE	NOTATION / AMMENDMENT

DO NOT SCALE DRAWINGS. CHECK ALL DIMENSIONS ON SITE. FIGURED DIMENSIONS TAKE PRECEDENCE.

CLIENT:

PROJECT ADDRESS:

TITLE: VISION PANEL IN DOORS / FIRE DOORS

DWG.No.

PLOTTED:

STATUS

DATE:

SCALE: 1:20@A4

PROJECT:

JOB:

STAGE:

DRAWN: RAS

CHECKED:

APPROVED:

TYPE: .

SHEET: of

REVISION: