ST ANTHONY OF PADUA CATHOLIC SCHOOL

DEVELOPMENT APPLICATION

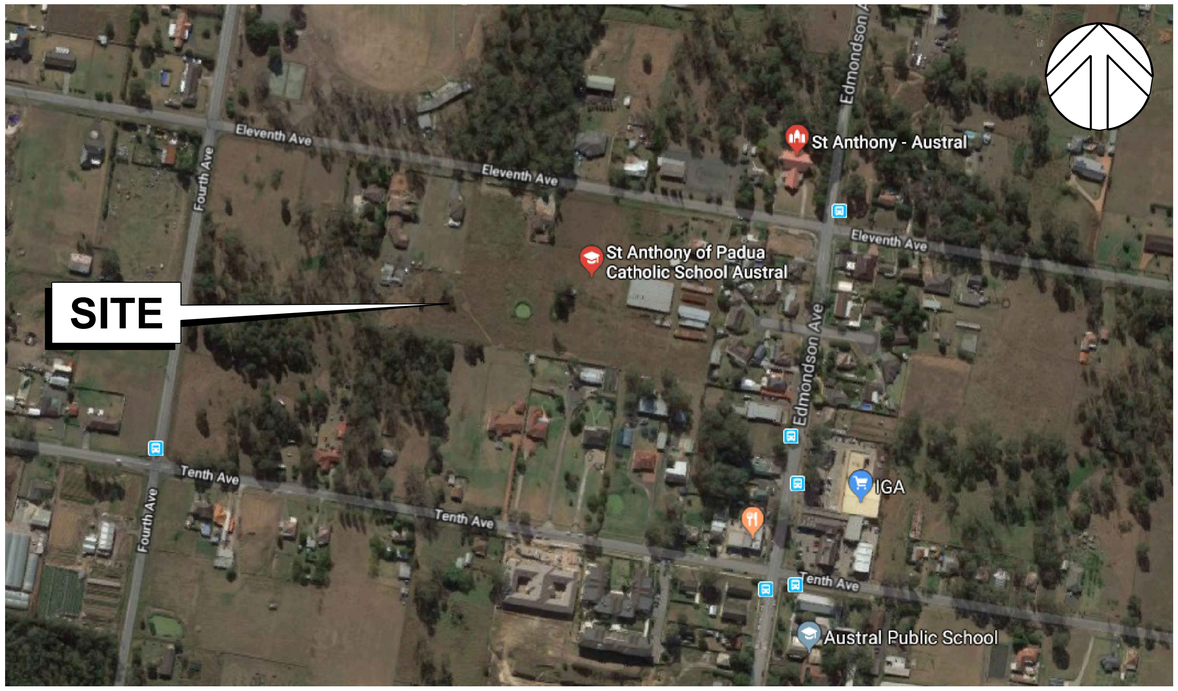

LOCALITY AERIAL

NOT TO SCALE

SOURCE : GOOGLE EARTH

Sheet List Table		
Sheet Number	Sheet Title	Rev.
C1.01	Cover Sheet	2
C1.02	Specification Notes	2
C2.01	Sediment and Erosion Control Plan	2
C2.02	Sediment and Erosion Control Details	2
C5.01	Off Site Works Plan	2
C5.02	Road Typical Sections	2
C6.01	Stormwater Layout Plan	2
C6.02	Stormwater Pit Schedule Sheet 1	2
C6.03	Stormwater Pit Schedule Sheet 2	2
C6.04	OSD Tank 1 plan	2
C6.05	OSD Tank 1 Sections	2
C6.06	Stormwater Drainage Details	2
C6.07	Stormwater 360 Treatment Device Typical Details	2

CLIENT
SYDNEY CATHOLIC SCHOOLS

PROJECT MANAGER
ERIK INNS

ARCHITECT
MUNNS SLY MOORE ARCHITECTS

Warren Smith & Partners

Warren Smith & Partners Pty Ltd
Level 9, 233 Castlereagh Street, Sydney 2000 NSW Australia
02 9299 1312 wsp@warrensmith.com.au
www.warrensmith.com.au ABN 36 300 430 126

CONSULTING ENGINEERS
Hydraulic Services Fire Services Civil Services
Sydney Water Accredited Water Servicing Co-ordinator and Designer

GLOBAL COMPLIANCE CERTIFICATION GCC ISO 9001 Certified

Serving the Construction Industry since 1981.

TITLE
COVER SHEET

SCALE	DRAWN	DESIGNED	CHECKED	APPROVED
AS SHOWN	M.CZ.	N.M.	L.Sh.	M.C.

JOB No.	DRAWING No.	ISSUE
5914000	C1.01	2

DATE	STATUS
MARCH 2018	DEVELOPMENT APPLICATION

Plot Date

Xrefs:
Plot Date: 20/07/2018@16:45:08 Login Name: jbiddis Cad File: T:\5914000\Drawings\AutoCAD\Civil\Design\Civil 2018\C1.01 Cover Sheet.dwg

GENERAL

G1. DESIGN HEREIN HAS BEEN PREPARED BY WARREN SMITH AND PARTNERS PTY LTD CONSULTING CIVIL ENGINEERS, LEVEL 9, 233 CASTLEREAGH ST, SYDNEY NSW 2000. TEL: (02) 9299 1312, FAX:- (02) 9290 1295.

G2. THE DRAWINGS HEREIN SHALL BE READ AS REQUIRED IN CONJUNCTION WITH ARCHITECT: MUNNS SLY MOORE ARCHITECTS PTY LTD 9 HALL STREET, PO BOX 5093, LYNEHAM ACT 2602 TEL: (02) 6248 8922, FAX: (02) 6248 8300

G3. ALL DIMENSIONS IN MILLIMETRES UNO. REDUCED LEVELS AND CHAINAGES ARE IN METRES. DO NOT SCALE DRAWINGS. USE FIGURED DIMENSIONS.

G4. THE PROPOSED WORKS DETAILED HEREIN SHALL BE CONSTRUCTED TO THE REQUIREMENTS OF COUNCIL GENERALLY AS DETAILED HEREUNDER.

G5. ALL EXISTING SERVICES SHALL BE VERIFIED FOR DEPTH AND HORIZONTAL POSITION BY PHYSICAL MEANS PRIOR TO EXCAVATION. ANY DISCREPANCIES SHALL BE BROUGHT FORTHWITH TO THE PROJECT MANAGER'S ATTENTION.

STORMWATER AND SUBSOIL DRAINAGE

MATERIALS:

STW1. PIPES AND FITTINGS FOR STORMWATER DRAINAGE SHALL BE AS FOLLOWS UNO ON THE DRAWINGS:

A. SEWER GRADE uPVC (SN8) WITH SOLVENT WELDED JOINTS FOR BELOW GROUND DRAINAGE UP TO 225mm.

B. FIBRE REINFORCED CEMENT / REINFORCED CONCRETE CLASS 3 WITH RUBBER RINGS FOR PIPE DIA'S GREATER THAN 225mm. UNO.

C. REINFORCED CONCRETE WHERE REQUIRED BY AS 3500 FOR EXCESSIVE DEPTH.

D. INSTALL IN ACCORDANCE WITH AUSTRALIAN STANDARD AS3500 EXCEPT WHERE VARIED BY THE CONTRACT DOCUMENTS.

STW2. PIPES & FITTINGS FOR SUBSOIL DRAINAGE SHALL BE SLOTTED POLYVINYL CHLORIDE (PVC) WITH SOLVENT WELDED JOINTS, MIN. 150mm DIAMETER.

STW3. IN GROUND DRAINAGE PIPEWORK SERVING DP's SHALL BE MINIMUM 150mm DIA. UNO.

STW4. STORMWATER PITS ARE AS SHOWN & SPECIFIED ON THE PLANS . PRECAST TYPE ACCEPTABLE WITH STEP IRONS FOR DEPTH GREATER THAN 1200. BENCH ALL PITS MIN. 30mm & FORM SMOOTH TRANSITION FROM INLET TO OUTLET, ALL INTERNAL PIT DIMENSIONS TO CONFORM TO TABLE 8.2 AS - 3500.3

STW5. SELECT FILL SHALL BE MATERIAL OBTAINED FROM EXCAVATION OF THE PIPE TRENCH OR IMPORTED WITH A PARTICLE SIZE FOR ROCK NOT GREATER THAN 75mm OR FOR OTHER THAN ROCK NOT GREATER THAN 150mm.

STW6. IMPORTED FILL SHALL BE EITHER, AND GENERALLY CONSIST OF SINGLE SIZED AGGREGATE WITH PARTICLE SIZE NOT GREATER THAN 5mm WRAPPED ALL ROUND WITH GEOTEXTILE FILTER FABRIC OR APPROVED HIGH COMPACTION SAND OR APPROVED CRUSHED ROAD GRAVEL CONFORMING TO RTA FORM 3051 OR SIMILAR.

STW7. STORMWATER PITS AND GRATES TO CONFORM WITH STANDARD COUNCIL REQUIREMENTS, WHERE ON PUBLIC LAND. GRATES TO BE SUPPLIED IN CLASS SHOWN ON THE DRAWINGS.

INSTALLATION REQUIREMENTS:

STW8. PIPES SHALL BE TRUE TO GRADES SHOWN AND ALIGNED SO THAT THE CENTRES OF THE INLET PIPES INTERSECT WITH THE CENTRE OF THE OUTLET PIPE AT THE DOWNSTREAM FACE OF THE PIT.

STW9. MINIMUM GRADES FOR GRAVITY STORMWATER DRAINAGE SHALL CONFORM TO AS3500 PART3 AS FOLLOWS, UNO:
1% FOR 100 AND 150 mm DIA.
0.5% FOR 225 mm DIA
0.5% FOR 300 mm DIA
0.4% FOR 375 mm DIA

STW10. MINIMUM DEPTH OF COVER SHALL BE :-
- 300mm IN PRIVATE PROPERTY (NON VEHICULAR TRAFFIC).
- 450mm IN PUBLIC AREAS.
- 600mm IN VEHICULAR TRAFFICABLE AREAS (FOOTWAY/ROADWAY)

STW11. BED ALL PIPES FIRMLY AND EVENLY ONTO IMPORTED BEDDING FILL MATERIAL.

STW12. LAY AND JOINT ALL PIPES IN ACCORDANCE WITH THE MANUFACTURERS RECOMMENDATIONS AND
AS 3725-1989 BURIED FLEXIBLE PIPELINES
AS 2566-1998 LOADS ON BURIED FLEXIBLE PIPELINES
AS 1597.2-1996 PRECAST REINFORCED CONCRETE BOX CULVERTS.
AS 3500-1990 NATIONAL PLUMBING & DRAINAGE CODE. PART 2, SANITARY PLUMBING AND SANITARY DRAINAGE. SYDNEY WATER REQUIREMENTS.

STW13. ALLOW TO TEST ALL PIPES AND PITS TO MANUFACTURERS REQUIREMENTS.

CONCRETE WORKS

C1. ALL WORKMANSHIP AND MATERIALS SHALL BE IN ACCORDANCE WITH AS3600, THE STANDARDS ASSOCIATION AUSTRALIA, STANDARDS CITED IN AS3600, THE DRAWINGS AND THE SPECIFICATION.

C2. ALL CONCRETE SHALL BE 80mm NOMINAL SLUMP, 20mm MAXIMUM AGGREGATE WITH NO ADMIXTURES OR FLY ASH, UNLESS OTHERWISE APPROVED. ALL CONCRETE WORK IN CONTACT WITH SEWER TO HAVE TYPE SL PORTLAND CEMENT, OTHERWISE TYPE A CEMENT FOR BRIDGE WORKS, A MAXIMUM 56 DAYS SHRINKAGE OF 600 MICROSTRAIN, A MINIMUM CEMENT CONTENT 350kg/m3 AND MAXIMUM WATER:CEMENT RATIO OF 0.40

C3. STRENGTH GRADE OF CONCRETE SHALL BE : 25 MPa (KERBS, EDGE STRIPS & CONCRETE ENCASEMENT) AND 32 MPa ELSEWHERE.

C4. CONSTRUCTION JOINTS SHALL BE PROPERLY FORMED AND USED ONLY WHERE SHOWN OR APPROVED. GENERALLY FOR HAND PLACED KERB & GUTTER 6mm THICK APPROVED BITUMINOUS MASTIC JOINTING MATERIAL SHALL BE PROVIDED AT INTERVALS NOT EXCEEDING 6m. FOR MACHINE PLACED KERB & GUTTER 6mm THICK APPROVED BITUMIOUS MASTIC JOINTING MATERIAL SHALL BE PROVIDED AT INTERVALS NOT EXCEEDING 12m & GUILLOTINED DUMMY GROOVED JOINTS, 25mm IN DEPTH, SHALL BE FORMED EVERY 3m OF GUTTER. JOINTS ARE ALSO REQUIRED AT EACH END OF GUTTER CROSSING AND GULLY PITS. JOINTS SHALL BE SET VERTICAL AND SQUARE TO THE KERB.

C5. CONCRETE CURING SHALL BE IN ACCORDANCE WITH AS3600. CURING SHALL BE COMMENCED WITHIN TWO HOURS OF FINISHING OPERATIONS AND SHALL BE CONTINUED FOR A MINIMUM OF SEVEN DAYS BY AN APPROVED PROPRIETARY COMPOUND OR BY KEEPING CONTINUOUSLY WET.

C6. FORMWORK SHALL BE DESIGNED AND CONSTRUCTED IN ACCORDANCE WITH AS3610. FORMWORK SHALL NOT BE STRIPPED NOR PROPS REMOVED WITHOUT APPROVAL.

REINFORCEMENT:

R1. REINFORCEMENT IS REPRESENTED DIAGRAMMATICALLY AND IS NOT NECESSARILY SHOWN IN TRUE PROJECTION.

R2. WELDING OR SPLICES IN REINFORCEMENT SHALL BE USED ONLY IN POSITIONS APPROVED BY THE ENGINEER.

R3. FABRIC LAP DETAILS SHALL BE IN ACCORDANCE WITH FIG.13.2.4 OF AS3600.

R4. HOOKS, LAPS AND BENDS SHALL BE IN ACCORDANCE WITH AS3600 UNO.

R5. ALL CHEMICAL ANCHORS SHALL BE EITHER 'CHEMSET' BY "RAMSET" WITH THE GLASS CAPSULE SYSTEM INSTALLED IN STRICT ACCORDANCE WITH MANUFACTURERS INSTRUCTIONS OR HILTI HVU ADHESIVE ANCHOR WITH FOIL CAPSULE SYSTEM INSTALLED IN STRICT ACCORDANCE WITH MANUFACTURERS INSTRUCTION. ALL CHEMICAL ANCHORS SHALL BE HOT DIPPED GALVANIZED AND BE MIN M16 DIA. U.N.O.

GENERAL EARTHWORKS, SITEWORKS & FILLING:

FILLING:

SGE1. THESE CLAUSES SHALL BE READ IN CONJUNCTION WITH ANY AVAILABLE GEOTECHNICAL REPORT UNDERTAKEN FOR THE SITE.

SGE2. THE RECOMMENDATIONS CONTAINED IN THE GEOTECH REPORT SHALL OVERRIDE THE CLAUSES PRESENTED HEREIN.

SGE3. STRIP ALL TOPSOIL AND UNDERLYING FILL AND STOCKPILE TOPSOIL FOR LATER REUSE FOR LANDSCAPING PURPOSES.

SGE4. NEW FILL REQUIRED TO REINSTATE CUT LEVELS TO PROPOSED BENCHING LEVELS SHALL BE SOURCED FROM OTHER PARTS OF THE EXCAVATION AS SELECT FILL OR IMPORTED FILL AS SPECIFIED BELOW IN SGE 5 AND SGE 6.

SGE5. SELECT FILL SHALL CONSIST OF LOCALLY DERIVED OR CUT NATURAL CLAYS.

SGE6. IMPORTED FILL SHALL CONSIST OF RIPPED SANDSTONE OR SHALE OR SIMILAR MATERIAL WITH MAXIMUM PARTICLE SIZE NOT GREATER THAN 120mm AND A MOISTURE CONTENT WITHIN 2-3% OF STANDARD OPTIMUM.

SGE7. ALL FILL (COHESIVE SOIL) SHALL BE PLACED IN LAYERS OF 200mm MAXIMUM THICKNESS, COMPACTED BY MACHINE ROLLING TO ACHIEVE A DRY DENSITY RATIO OF NOT LESS THAN 98% STANDARD MAXIMUM AT A CORRESPONDING MOISTURE CONTENT WITHIN 2-3% OF STANDARD OPTIMUM.

SGE8. IN AREAS WHERE HIGH IMPACT ROLLING IS USED TEST EACH FINAL LAYER OF NOT GREATER THAN 300mm TO 400mm TO ACHIEVE A DRY DENSITY SGE8. RATIO OF NOT LESS THAN 98% STANDARD MAXIMUM AT A CORRESPONDING MOISTURE CONTENT WITHIN 2-3% OF STANDARD OPTIMUM.

EXCAVATION BATTERS:

SGE9. ALL TEMPORARY BATTERS CUT IN CLAY SUBSTRATE SHALL BE 1 HORIZ : 1 VERT. ALL LONG TERM EXPOSED BATTERS CUT IN CLAY SUBSTRATE SHALL BE 2 HORIZ : 1 VERT. ALL DETENTION BASIN BATTERS IN CLAY SUBSTRATE SHALL BE 3 HORIZ : 1 VERT. ALL DETENTION BASIN BATTERS IN ROCK SUBSTRATE SHALL BE NEAR VERTICAL.

SGE10. GEOTECHNICAL TESTING IS TO BE UNDERTAKEN TO AT LEAST LEVEL 2 CONTROL OF FILL COMPACTION STANDARD, AS DEFINED IN AS. 3738 AS FOLLOWS

- FOR GENERAL FILL OR CUT AREAS OVER THE AREA PROVIDE ONE (1) TEST PER 200mm LAYER, OVER AN AREA NOT GREATER THAN 500 m^2

- FOR GENERAL FILL AREAS IN CONCENTRATED AREAS ADJACENT TO AND BEHIND THE STRUCTURE AND ADJACENT TO AND BEHIND RETAINING WALLS PROVIDE ONE (1) TEST PER 200mm LAYER, OVER AN AREA NOT GREATER THAN 50m^2

SGE11. SUBMIT ALL GEOTECHNICAL TEST RESULTS TO WARREN SMITH & PARTNERS FOR REVIEW PRIOR TO CONTINUATION WITH SUBSEQUENT SECTION OF WORK.

EARTH WORKS FOR SERVICES

E1. EXCAVATE TRENCHES AND STOCKPILE ALL MATERIAL FOR INSPECTION WITH REGARD TO RE-USE FOR TRENCH BACKFILL. REMAINING MATERIAL TO BE REMOVED FROM SITE.

E2. BEDDING MATERIAL SHALL CONSIST OF IMPORTED FILL ONLY. THICKNESS OF BEDDING LAYER SHALL BE 75mm IN O.T.R. AND 200mm IN ROCK.

E3. EMBED ALL PIPES WITH IMPORTED FILL. PROVIDE 200mm SIDE SUPPORT AND 150mm OVERLAY ABOVE PIPE CROWN.

E4. TRENCH FILL ABOVE THE EMBEDMENT ZONE TO THE UNDERSIDE OF THE ROAD PAVEMENT OR FOOTWAY FILL MATERIAL SHALL BE AS FOLLOWS :

<u>UNDER ROADWAY</u>

TRENCH FILL MATERIAL SHALL CONSIST OF IMPORTED FILL AS SPECIFIED HEREIN OF EITHER HIGH GRADE COMPACTION SAND OR APPROVED CRUSHED ROAD GRAVEL CONFORMING TO RTA FORM 3051 OR SIMILAR.

<u>OTHER THAN ROADWAY</u>

TRENCH FILL MATERIAL EXCAVATED SHALL CONSIST OF SELECT FILL AS SPECIFIED HEREIN AND SHALL NOT CONTAIN MORE THAN 20% OF STONES OF SIZE BETWEEN 75mm & 150mm AND NONE LARGER THAN 150mm. PRIOR TO THE USE OF THE EXCAVATED MATERIAL IT SHALL BE INSPECTED AND APPROVED BY THE CONSULTANT.

E5. COMPACT BEDDING, EMBEDMENT AND TRENCH FILL MATERIALS AS FOLLOWS:

EMBEDMENT:-
FOR GRANULAR FILL MATERIAL (NON-COHESIVE SOILS) EG. COARSE AGGREGATE FILL, HIGH GRADE COMPACTION SAND, THE DENSITY INDEX (ID) SHALL BE NOT LESS THAN 70%.

TRENCH FILL:-
FOR GRANULAR MATERIAL (NON-COHESIVE SOILS), THE DENSITY INDEX (ID) SHALL BE NOT LESS THAN 70%.

FOR NON-GRANULAR FILL MATERIAL (COHESIVE SOILS), THE DRY DENSITY RATIO (RD) SHALL BE NOT LESS THAN 95%.

E6. MEASURE OF COMPACTION:-
THE DEGREE OF COMPACTION SHALL BE MEASURED BY ONE OF THE FOLLOWING PARAMETERS :-

GRANULAR FILL (NON-COHESIVE SOILS). THE DENSITY INDEX (ID) DETERMINED IN ACCORDANCE WITH AS 1289.E6.1 BASED ON THE MAXIMUM AND MINIMUM DRY DENSITIES IN ACCORDANCE WITH AS 1289.E5.1 AND THE FIELD DRY DENSITY IN ACCORDANCE WITH AS 1289.5.3.2, AS 1289.E3.5 OR AS 1289.E8.1.

NON-GRANULAR FILL (COHESIVE SOILS). THE DRY DENSITY RATION (RD) DETERMINED IN ACCORDANCE WITH AS 1289.5.4.1 BASED ON THE FIELD DRY DENSITY IN ACCORDANCE WITH AS 1289.5.3.2 AND THE MAXIMUM DRY DENSITY IN ACCORDANCE WITH AS 1289.5.1.1

E7. GEOTECHNICAL TESTING IS TO BE UNDERTAKEN TO AT LEAST LEVEL 2 CONTROL OF FILL COMPACTION STANDARD, AS DEFINED IN AS. 3738 AS FOLLOWS

- TEST EACH 300mm LAYER ABOVE PIPE CROWN.
- TEST BASE & SUB-BASE LAYERS WHERE APPLICABLE.
- TESTS SHALL BE REQUIRED AT EACH 50m CENTRES WHERE THE LENGTH OF TRENCH IS WITHIN THE 50m REQUIREMENT.

E8. SUBMIT ALL GEOTECHNICAL TEST RESULTS TO WARREN SMITH & PARTNERS FOR REVIEW PRIOR TO CONTINUATION WITH SUBSEQUENT SECTION OF WORK.

RESTORATION:

RES1. RESTORE ALL TRAFFIC AREAS TO PRE EXISTING CONDITION.

RES2. FOR ALL SURFACES OTHER THAN IN TRAFFIC AREAS RESTORE DISTURBED SURFACES TO PRE-EXISTING CONDITIONS AND COMPACT AS SPECIFIED.

RES3. RESTORE ALL AUTHORITY OWNED AREAS TO COUNCIL STANDARDS

ROAD WORKS, DRIVEWAYS & CARPARKS

R1. ALLOW FOR LEVEL 2 TESTING AND SUB-GRADE CONDITIONS & PAVEMENT THICKNESS TO BE VERIFIED BY GEOTECHNICAL CONSULTANT AFTER INSPECTION OF PRELIMINARY BOXING.

R2. ALLOW FOR ANY SUB-GRADE REPLACEMENT WORK TO BE DETERMINED AS REQUIRED BY GEOTECHNICAL CONSULTANT AT THE TIME OF PAVEMENT CONSTRUCTION.

R3. MINIMUM DRY DENSITY RATIOS (AS 1289 3.4.1-1993) TO BE:

BASE COURSE:	98% MODIFIED
SUB-BASE:	95% MODIFIED
SUB-GRADE:	100% STANDARD
SUB-GRADE REPLACEMENT:	100% STANDARD

R4. PAVEMENT MATERIALS TO COMPLY WITH RMS SPECIFICATION No. 3051 OR SIMILAR AS APPROVED BY GEOTECHNICAL CONSULTANT.

R5. PROVIDE (1) TEST FOR EACH LAYER NOT EXCEEDING 250mm THICK BEING BASECOURSE, SUB-BASE & SUB-GRADE OVER AN AREA NOT GREATER THAN 500m^2

R6. SUBMIT ALL GEOTECHNICAL TEST RESULTS TO WARREN SMITH & PARTNERS FOR REVIEW PRIOR TO CONTINUATION WITH SUBSEQUENT SECTION OF WORK.

APPROVALS

A1. THE AS CONSTRUCTED WORKS SHALL BE INSPECTED BY DESIGN CONSULTANT. MINIMUM 48 HOURS NOTICE SHALL APPLY TO ALL INSPECTIONS.

A2. THE DESIGN PLANS HEREIN ARE SUBJECT TO COUNCIL APPROVAL PRIOR TO CONSTRUCTION. OBTAIN EXPRESS (WRITTEN) ADVICE TO PROCEED FROM PROJECT MANAGER PRIOR TO COMMENCEMENT.

A3. SUBMIT WORK-AS-EXECUTED DRAWINGS IN CIVILCAD OR DXF DIGITAL FORMAT AND HARD COPY FORMAT. VERIFY ALL CONSTRUCTION WORKS SHOWN HEREON.

A4. CERTIFY THAT THE AS CONSTRUCTED SYSTEM HAS BEEN BUILT IN ACCORDANCE WITH THE APPROVED PLANS ISSUED FOR CONSTRUCTION.

SERVICES UNDER ROAD SURFACES

S1. ALL OTHER SERVICES INCLUDING BUT NOT LIMITED TO WATER, HYDRANT, GAS, SEWER, ELECTRICAL AND COMMUNICATIONS CONDUITS OR CABLES SHALL BE LAID WITH MINIMUM 600mm U.N.O. COVER BELOW PROPOSED ROAD SURFACE OR APPROVED OTHER MEANS TO PROTECT DURING CONSTRUCTION.

ROAD SIGNS & LINE MARKING

RS1. ALL SIGNS AND LINEMARKING SHALL BE TO ROADS & TRAFFIC AUTHORITY STANDARDS AND SPECIFICATIONS AND AS.1742, MANUAL OF UNIFORM TRAFFIC CONTROL DEVICES

RS2. ALL LINEMARKING SHALL BE AUGMENTED BY RETROREFLECTIVE RAISED PAVEMENT MARKERS (RRPMs) AND ALL SHALL BE TO AS 1742.2 - 1994 AND AS 1742.2 /AMDT 1/1997-10-05

RS3. ALL ROAD SIGNS AND POSTS SHALL BE TO AS 1742.2 - 1994 AND AS 1742.2 /AMDT 1/1997-10-05

PROTECTION OF FLORA - REFER SPECIFICATION

1. ANY TRENCHES WITHIN 3m OF TREES SHALL BE HAND DUG TO AVOID DAMAGE TO TREE ROOTS.

2. THE SEWERAGE WORKS HAVE BEEN LOCATED TO MINIMISE CLEARING AND DAMAGE TO THE EXISTING FLORA ENVIRONMENT. NO TREES ARE PERMITTED TO BE REMOVED OR DAMAGED UNO. CONSTRUCTION OF THE SEWER GRAVITY OR RISING MAIN IN THE VICINITY OF EXISTING TREES SHALL BE HAND EXCAVATED ONLY, ENSURING IRREVERSIBLE DAMAGE OF THE ROOT SYSTEM DOES NOT OCCUR.

3. IF IT IS CONSIDERED NECESSARY TO PERFORM ANY WORK ON TREES, INCLUDING TRIMMING, LOPPING, ROOT CUTTING, REPAIR AND REMOVAL, APPLICATION IN WRITING SHALL BE MADE BY THE CONTRACTOR TO THE SUPERINTENDENT. ANY WORK PERMITTED TO BE DONE ON TREES TO BE RETAINED SHALL BE PERFORMED BY AN APPROVED TREE SURGEON.

4. NO MATURE TREES OR SHRUBS ARE TO BE REMOVED FOR THE PURPOSES OF THE WORKS WITHOUT PRIOR APPROVAL FROM LIVERPOOL CITY COUNCIL.

AUTHORITY STANDARDS

LGA 1. THE DRAWINGS HEREIN SHALL BE READ IN CONJUNCTION WITH LOCAL AUTHORITY'S STANDARDS & SPECIFICATIONS WHICH SHALL OVERRIDE SPECIAL DETAILS SHOWN ON THE DRAWINGS.

CLOSED CIRCUIT COLOUR TV (CCTV)

CCTV1. UNDERTAKE A CCTV INSPECTION OF ALL THE COMPLETED DRAINAGE IN ACCORDANCE WITH THE GUIDELINES OF THE THE AUSTRALIAN CONDUIT CONDITION EVALUATION MANUAL (ACCEM)

CCTV2. APPLY THE FOLLOWING REQUIREMENTS TO THE CCTV INSPECTION:-

A. USE DATA CAPTURE SOFTWARE APPROVED BY SYDNEY WATER

B. USE CERTIFIED CCTV OPERATORS

C. THE CCTV VIDEOTAPE SHALL BE OF QUALITY TO ALLOW ACCURATE ASSESSMENT OF THE INTERNAL CONDITION OF THE PIPE.

CCTV3. FURNISH TO THE DESIGN OF THE CONSULTANT:-
A. VIDEOS IN MPG FORMAT FOR VIEWING
B. CCTV REPORT AND SURVEY DATA IN PDF FORMAT
C. ONE HARD COPY PRINTOUT OF THE SURVEY DATA

PROTECTION OF TREES

T1. WHERE STORMWATER DRAINAGE IS LAID IN THE VICINITY OF TREES / CANOPIES OF TREES, PARTICULARLY IN THE NORTH EAST CORNER OF THE SITE, ALLOW THE CONSULTANT ARBORIST TO INSPECT PROGRESSIVELY THE EXCAVATION AND CONSTRUCTION WORKS.

PRELIMINARY - NOT FOR CONSTRUCTION

DO NOT SCALE FROM DRAWINGS, CHECK & VERIFY ALL DIMENSIONS & LEVELS BEFORE COMMENCEMENT OF ANY WORK.

THIS DRAWING IS NOT TO BE COPIED IN PART OR WHOLE WITHOUT WRITTEN PERMISSION FROM WARREN SMITH AND PARTNERS.

REVISION	AMENDMENT	DATE	REVISION	AMENDMENT	DATE
1	DEVELOPMENT APPLICATION	25/05/18			
2	DEVELOPMENT APPLICATION	19/07/18			

CLIENT: SYDNEY CATHOLIC SCHOOLS

PROJECT: ST ANTHONY OF PADUA CATHOLIC SCHOOL

PREPARED BY
Warren Smith & Partners
Warren Smith & Partners Pty Ltd
1st Floor, 123 Clarence Street, Sydney 2000 NSW Australia
T 02 9299 1312 F 02 9290 1295 wsp@warrensmith.com.au
www.warrensmith.com.au ABN 36 300 430 126
CONSULTING ENGINEERS
Hydraulic Services Fire Protection Civil Engineering
Sydney Water Accredited Water Servicing Co-ordinator
- Design Project Management - Building Plan Approvals
SERVING THE CONSTRUCTION INDUSTRY SINCE 1981.
ISO 9001 Lic No: QAC/R61/0771

TITLE: SPECIFICATION NOTES

SCALE	DRAWN	DESIGNED	CHECKED	APPROVED
AS SHOWN	M.CZ.	N.M.	L.Sh.	M.C.

JOB No.	DRAWING No.	ISSUE
5914000	C1.02	2

DATE	STATUS
MARCH 2018	DEVELOPMENT APPLICATION

Xrefs: X-4752001-TB_A1H Plot Date: 20.07.2018@16:45:15 Login Name: JMello Cad File: T:\5914000\Drawings\AutoCAD\Civil\Design\Civil 2D\DA\C1.02 Specification Notes.dwg

0 10 20 30 40 50 60 70 80 90 100 110 120 130 140 150 SHEET SIZE: A1

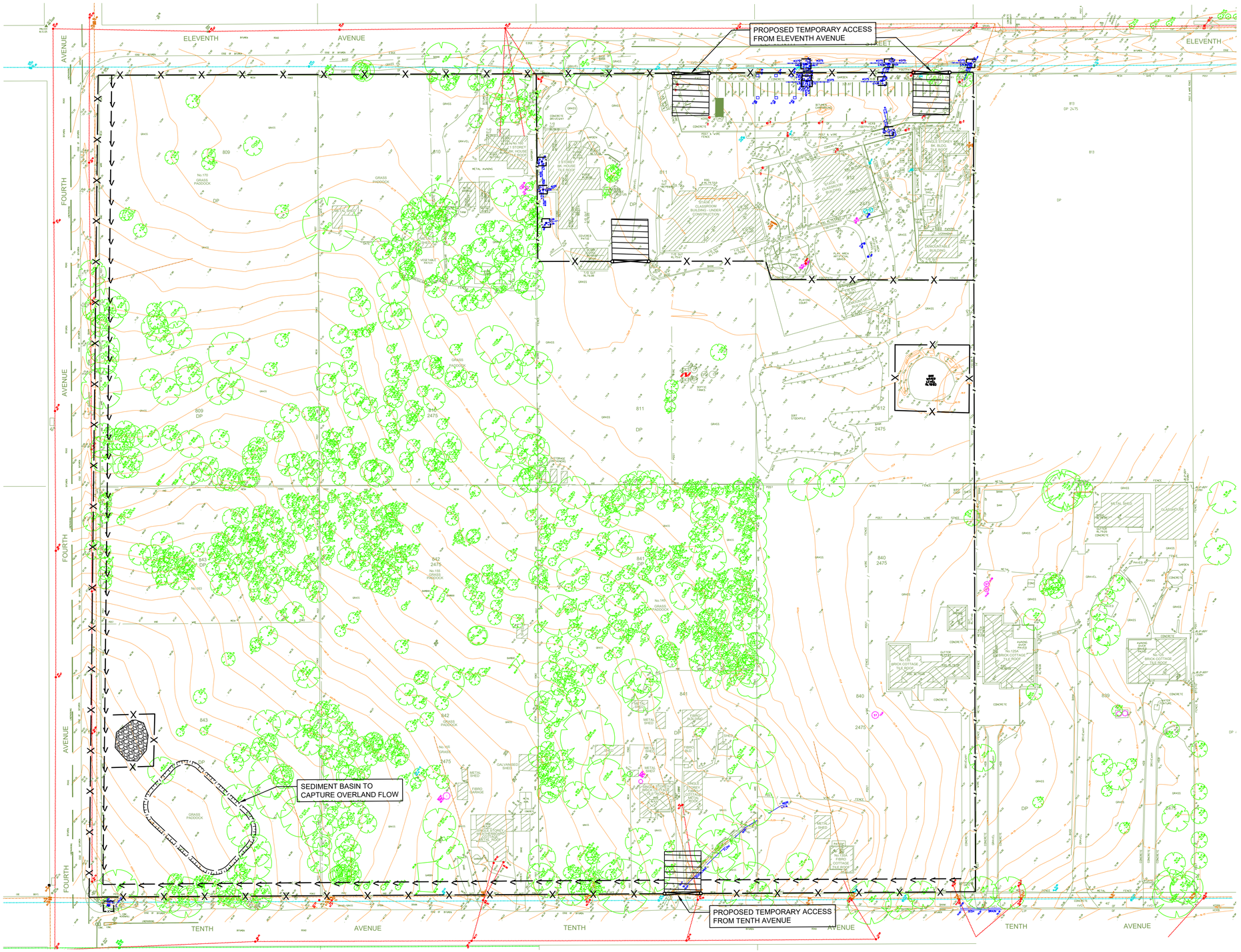

LEGEND

- SITE FENCE
- SITE GATE
- SEDIMENT FENCE
- GEOTEXTILE INLET FILTER DROP INLET SEDIMENT TRAP
- VEHICLE ENTRY SHAKER GRID
- CATCH DRAIN
- SITE STOCKPILE

NOTES

1. GEOTEXTILE INLET FILTER BAGS TO BE FITTED IN ALL STORMWATER GRATED PITS WITHIN THE DEVELOPMENT AREA.
2. SEDIMENT BASIN SIZE AND LOCATION ARE INDICATIVE ONLY AND WILL BE DESIGNED DURING DETAILED DESIGN STAGE.
3. STOCKPILE LOCATION IS INDICATIVE ONLY AND SHALL BE DETERMINED ON SITE DURING CONSTRUCTION STAGE.

PRELIMINARY - NOT FOR CONSTRUCTION

DO NOT SCALE FROM DRAWINGS, CHECK & VERIFY ALL DIMENSIONS & LEVELS BEFORE COMMENCEMENT OF ANY WORK.

THIS DRAWING IS NOT TO BE COPIED IN PART OR WHOLE WITHOUT WRITTEN PERMISSION FROM WARREN SMITH AND PARTNERS.

NORTH

12.5 0 5 10 15 20 25m
PLAN SCALE 1:750 A1 SHEET

REVISION	AMENDMENT	DATE	REVISION	AMENDMENT	DATE
1	DEVELOPMENT APPLICATION	25/05/18			
2	DEVELOPMENT APPLICATION	19/07/18			

CLIENT
SYDNEY CATHOLIC SCHOOLS

PROJECT
ST ANTHONY OF PADUA CATHOLIC SCHOOL

PREPARED BY
Warren Smith & Partners
Warren Smith & Partners Pty Ltd
1st Floor, 123 Clarence Street, Sydney 2000 NSW Australia
T 02 9299 1312 F 02 9290 1295 wsp@warrensmith.com.au
www.warrensmith.com.au ABN 36 300 430 126
CONSULTING ENGINEERS
Hydraulic Services Fire Protection Civil Engineering
Sydney Water Accredited Water Servicing Co-ordinator
- Design Project Management - Building Plan Approvals
SERVING THE CONSTRUCTION INDUSTRY SINCE 1981.
Lic No: QAC/R61/0771

TITLE
SEDIMENT AND EROSION CONTROL PLAN

SCALE	DRAWN	DESIGNED	CHECKED	APPROVED
AS SHOWN	M.CZ.	N.M.	L.Sh.	M.C.

JOB No.	DRAWING No.	ISSUE
5914000	C2.01	2

DATE	STATUS
MARCH 2018	DEVELOPMENT APPLICATION

0 10 20 30 40 50 60 70 80 90 100 110 120 130 140 150
SHEET SIZE: A1

Xrefs: X:\5914000.SI_Ground, X:\5914000.AR_Ground, X:\5914000.TB, A1H
Plot Date: 6/07/2018@18:42:41 , Layout Name: (Model) , CAD File: X:\5914000\Drawings\AutoCAD\Civil\Design\Civil 2D\DA\C2.01 Sediment and Erosion Control Plan.dwg

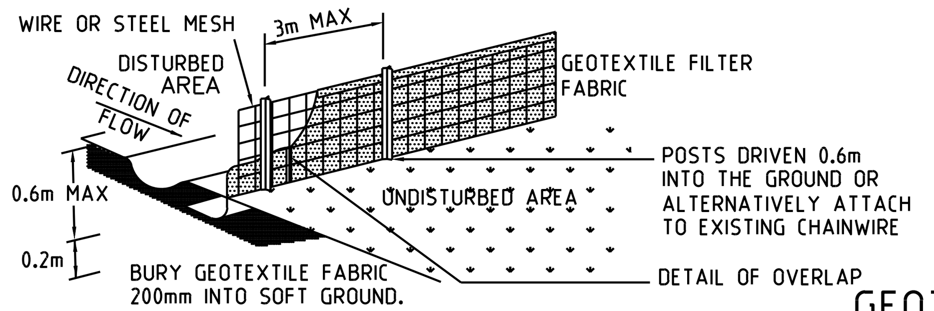

SEDIMENT CONTROL FENCE
NTS

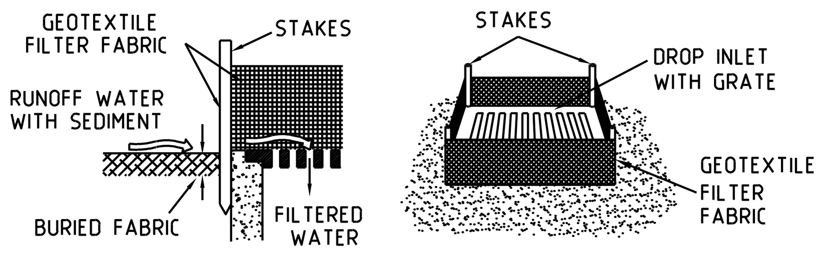

GEOTEXTILE FILTER FABRIC DROP INLET SEDIMENT TRAP
NTS

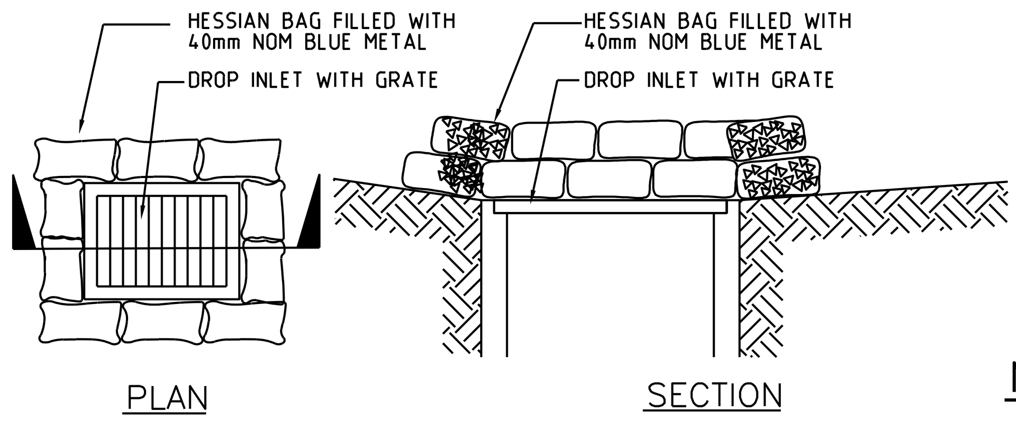

HESSIAN BAG DROP INLET SEDIMENT TRAP
N.T.S.

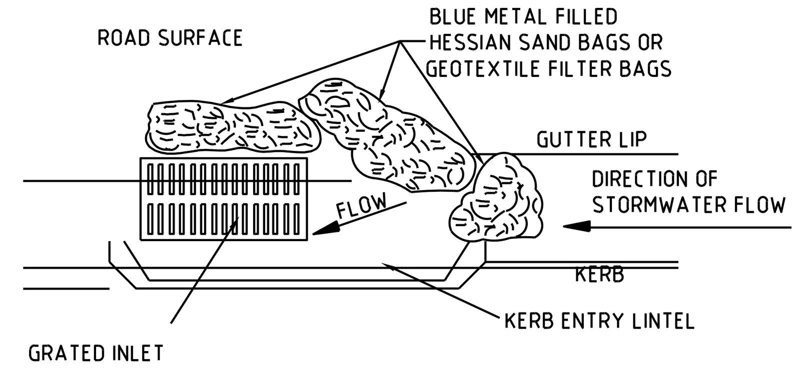

NEW/EXISTING GRATED KERB ENTRY PIT SEDIMENT CONTROL BARRIER
NTS

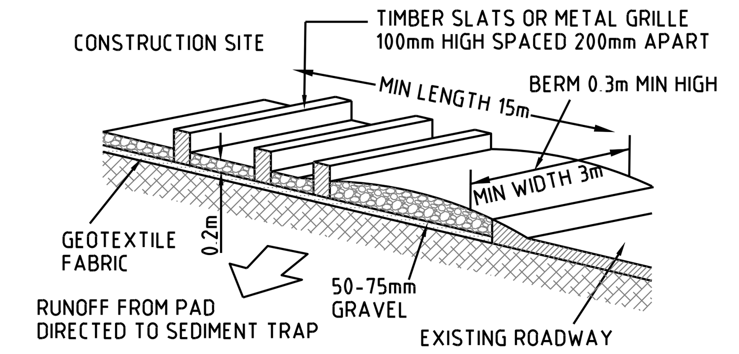

STABILIZED CONSTRUCTION SITE VEHICLE ENTRY/EXIT
NTS

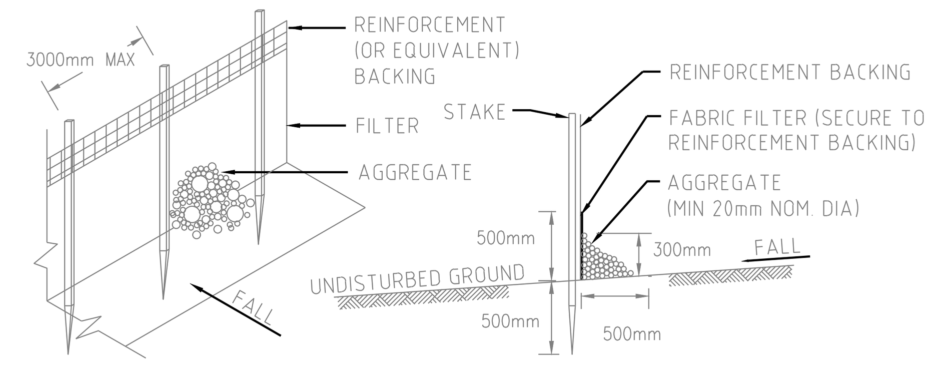

SEDIMENT FENCE DETAIL FOR ROCKY GROUND
NTS

SEDIMENT FENCE NOTES:-

1. CONSTRUCT SEDIMENT FENCE AS CLOSE AS POSSIBLE TO PARALLEL TO THE CONTOURS OF THE SITE OR AT THE TOE OF A SLOPE.
2. DRIVE 1.5 METRE LONG STAR PICKETS INTO GROUND SUFFICIENT TO PROVIDE RIGID SUPPORT, 3 METERS APART. WHERE THERE IS INSUFFICIENT SOIL DEPTH OVER ROCK, HOLES ARE TO BE DRILLED INTO ROCK TO ACCEPT THE STAR PICKETS.
3. ON SOFT GROUND MATERIALS, DIG A 150mm DEEP TRENCH ALONG THE UPSLOPE LINE OF THE FENCE FOR THE BOTTOM OF THE FABRIC TO BE ENTRENCHED.
4. BACKFILL TRENCH OVER BASE OF FABRIC & COMPACT.
5. FIX SELF-SUPPORTING GEOTEXTILE TO UPSLOPE SIDE OF POSTS WITH WIRE TIES OR AS RECOMMENDED BY THE GEOTEXTILE MANUFACTURER. USE A REINFORCEMENT BACKING WITH NON SELF-SUPPORTING GEOTEXTILE FABRIC.
6. JOIN SECTIONS OF FABRIC AT A SUPPORT POST WITH A 150mm OVERLAP.
7. ON HARD OR ROCKY GROUND, SMOOTH A 500mm WIDE STRIP UPSLOPE OF THE FENCE LINE. TURN THE BOTTOM 500mm OF THE FABRIC UPSLOPE AND ANCHOR IN PLACE WITH SUITABLE AGGREGATE.
8. WHERE A SEDIMENT FENCE IS CONSTRUCTED DOWN SLOPE FROM A DISTURBED BATTER THE FENCE SHOULD BE LOCATED 1.5 TO 2.0 METERS DOWN SLOPE FROM THE TOE OF THE BATTER.

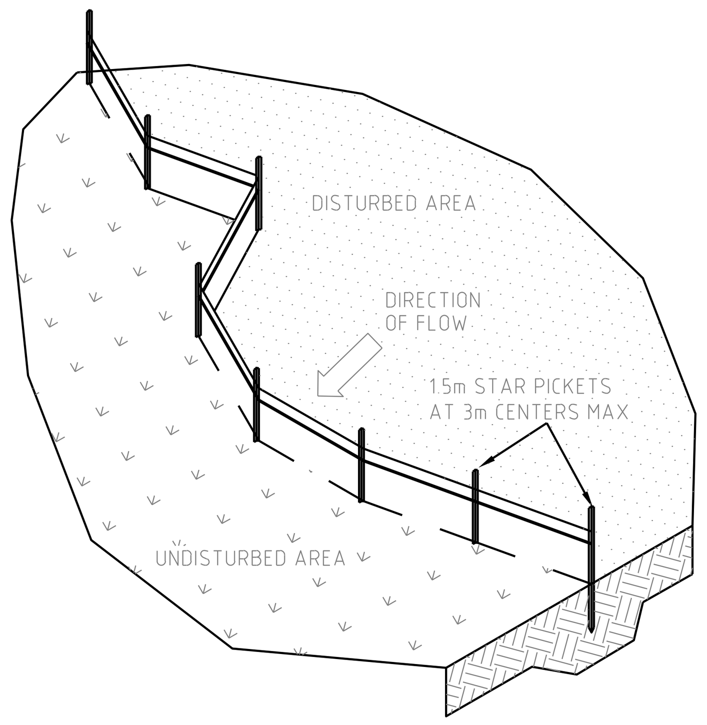

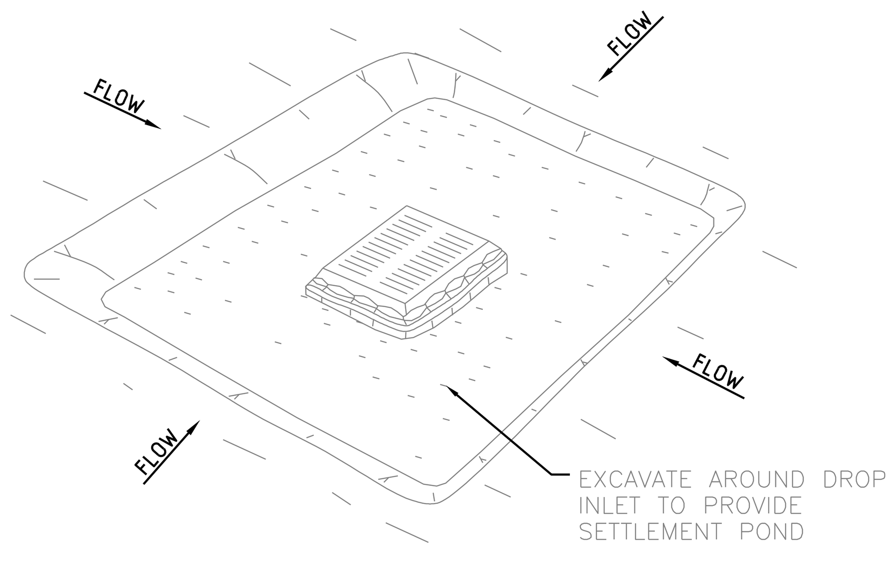

EXCAVATED SEDIMENT TRAP
NTS

EXCAVATED SEDIMENT TRAP NOTES:-

1. REMOVE THE SEDIMENT WHEN IT HAS ACCUMULATED TO HALF THE DESIGN DEPTH OF THE TRAP AND RESTORE THE TRAP TO ITS ORIGINAL DIMENSIONS.
2. PROVIDE 50 cu.m/Ha OF SEDIMENT STORAGE VOLUME.
3. REFER TO THE MAINTENANCE REQUIREMENTS.

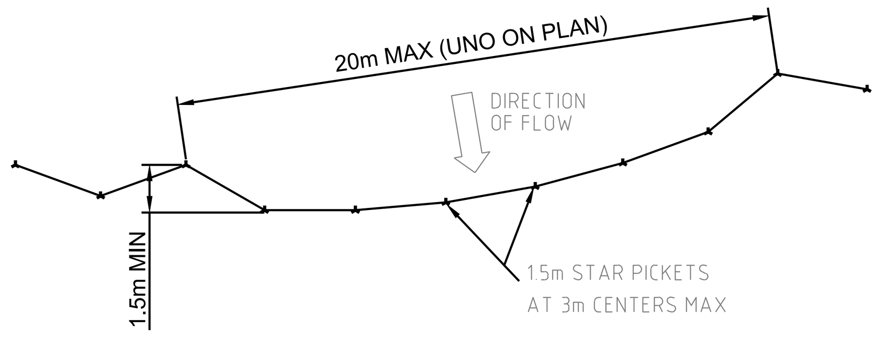

SEDIMENT FENCE LAYOUT PLAN
NTS

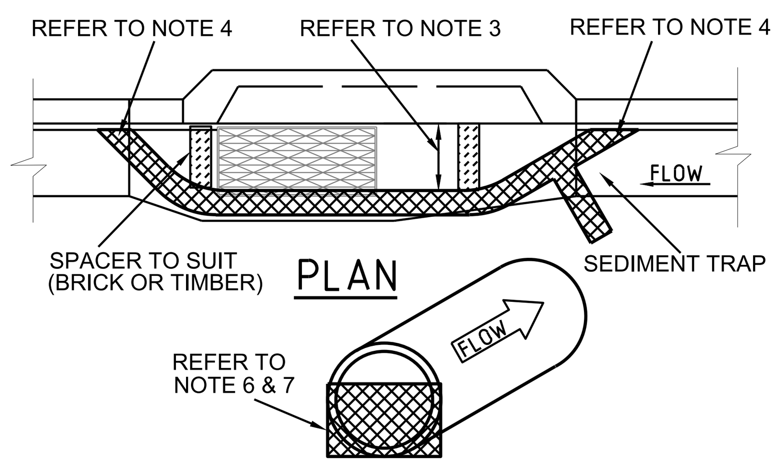

GEOTEXTILE FILTER BAGS
NTS

SEDIMENT BARRIER FOR PITS & PIPES, NOTES:-

1. SLEEVES ARE TO BE MADE FROM GEOTEXTILE FABRIC LONGER THEN THE LENGTH OF THE INLET PIT.
2. FILL SLEEVE WITH 5 OR 10mm CLEAN GRAVEL.
3. PLACE THE SLEEVE AT THE OPENING OF THE KERB INLET LEAVING A 100mm GAP TO ACT AS AN EMERGENCY OVERFLOW.
4. SLEEVE MUST BE PLACED AGAINST THE KERB TO PREVENT BYPASS.
5. FIT SLEEVE TO ALL INLETS DOWNSTREAM OF THE WORKS.
6. FOR DRAINAGE WORKS FIT GEOTEXTILE FABRIC OR GEO BAGS TO UPSTREAM FACE OF ALL OPEN PIPES.
7. MAINTAIN AN OPENING AT THE TOP OF THE PIPE OF 1/3 OF THE PIPE DIAMETER.
8. THE FILTERS ARE TO BE CLEANED AND MAINTAINED DAILY.
9. ALL CARE SHOULD BE TAKEN TO MINIMIZE SEDIMENT REACHING THE STORMWATER SYSTEM BY MINIMIZING EXCAVATION WORKS AND PREVENTING EXCESS WATER FLOW THROUGH WORKS.

SITE ENTRY/EXIT NOTES:-

1. ALL VEHICLE ENTRANCES & EXITS TO THE CONSTRUCTION SITE MUST BE STABILIZED TO PREVENT THEM BECOMING A SOURCE OF SEDIMENT, BY PROVIDING A VEHICLE SHAKE AREA. THIS MAY CONSIST OF A TIMBER, CONCRETE OR STEEL SHAKER GRID OR RUBBLE AREA.
2. THE VEHICLE EXIT AREA IS TO BE MAINTAINED IN A CLEAN & SERVICEABLE CONDITION DURING THE TOTAL TIME OF USAGE.
3. ANY UNSEALED ROAD BETWEEN THE DEVICE AND COUNCILS ROADWAY IS TO BE TOPPED WITH 100mm THICK, 40mm NOMINAL SIZE AGGREGATE.
4. PUBLIC ROADS MUST BE KEPT FREE OF DIRT AND MUD. SEDIMENT TRACKED ONTO THE PUBLIC ROADWAY BY VEHICLES LEAVING THE CONSTRUCTION SITE IS TO BE SWEPT UP IMMEDIATELY.
5. FENCES SHOULD BE ERECTED TO ENSURE VEHICLES CAN NOT BYPASS THE STABILIZED ACCESS POINTS, UNLESS COMING FROM A STABILIZED AREA.

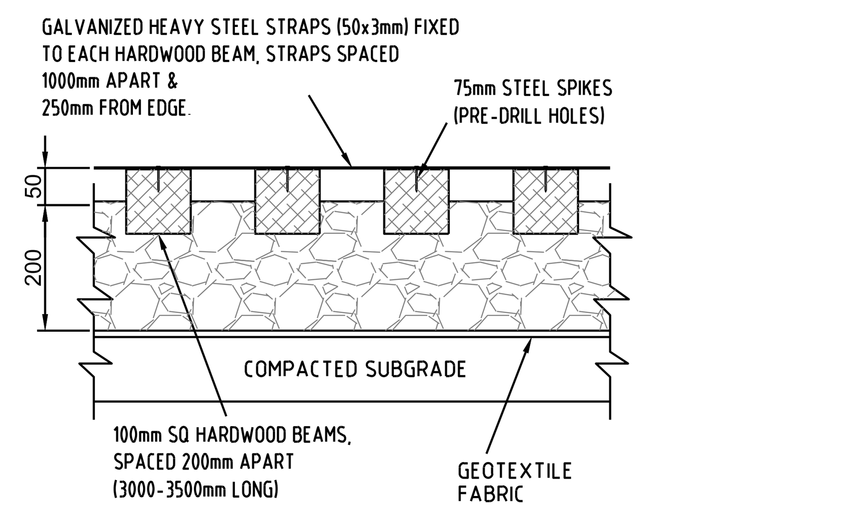

VEHICLE SHAKER GRID
NTS

SITE ENTRY/EXIT CONSTRUCTION NOTES:-

1. STRIP TOP SOIL & LEVEL SITE. PROVIDE CATCH DRAIN AT SIDES TO DIRECT RUNOFF WATER TO SEDIMENT TRAPS.
2. COMPACT SUBGRADE AND REMOVE ANY HIGH POINTS.
3. COVER AREA WITH GEOTEXTILE FABRIC. THIS MAY BE WOVEN OR NEEDLE PUNCHED PRODUCT WITH A MINIMUM CBR BURST STRENGTH (AS3706.4-90) OF 2500 N.
4. CONSTRUCT 200mm THICK RUBBLE PAD OVER GEOTEXTILE USING ROAD BASE OR 30-40mm AGGREGATE. MINIMUM LENGTH 15 METRES OR TO BUILDING ALIGNMENT. MINIMUM WIDTH 3 METRES. CONSTRUCT 300mm HIGH HUMP IMMEDIATELY WITHIN BOUNDARY TO DIVERT WATER TO A SEDIMENT TRAP.
5. WHERE GRIDS ARE USED FIRST CONSTRUCT A 150 THICK PAD OVER GEOTEXTILE FABRIC. LEVEL THIS IN BOTH DIRECTIONS. LOWER GRID ON TO THE PREPARED BASE AND ENSURE THAT NO PART IS SITTING ON ANY HIGH POINTS. BACKFILL THE SPACES BETWEEN THE GRIDS TO WITHIN 50mm OF THE TOP.
6. PROVIDE RAMPS AT ENDS AND SIDE OF GRIDS. IF DEPRESSIONS OCCUR IN THE RAMPS DURING USE. ADD ADDITIONAL MATERIAL.

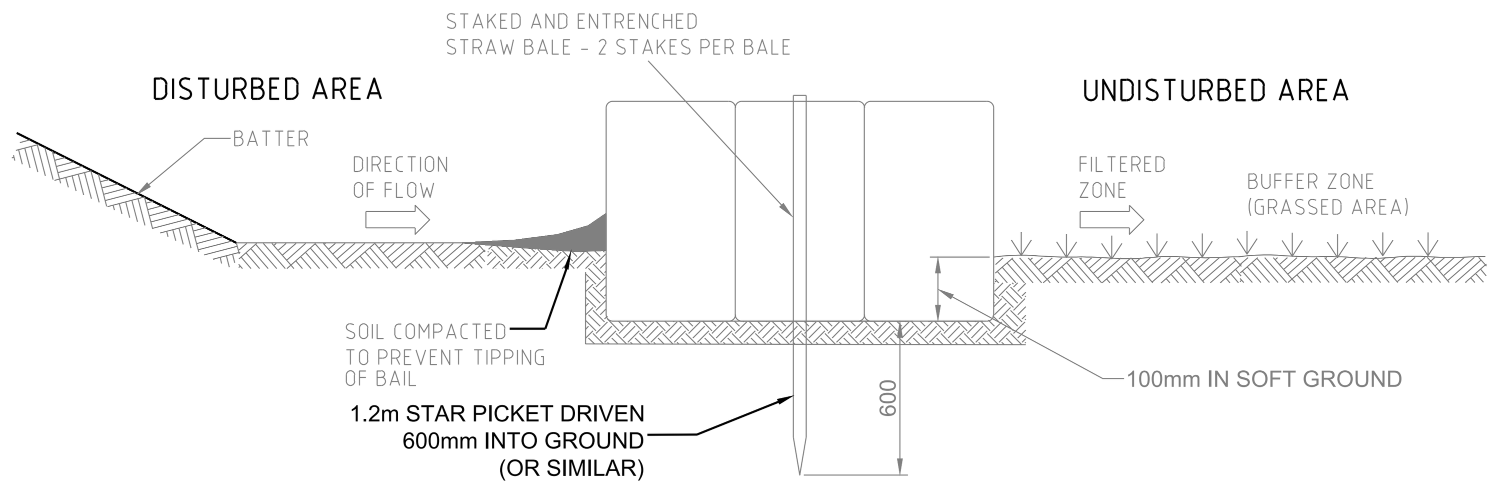

TYPICAL STRAW BALE SECTION
NTS

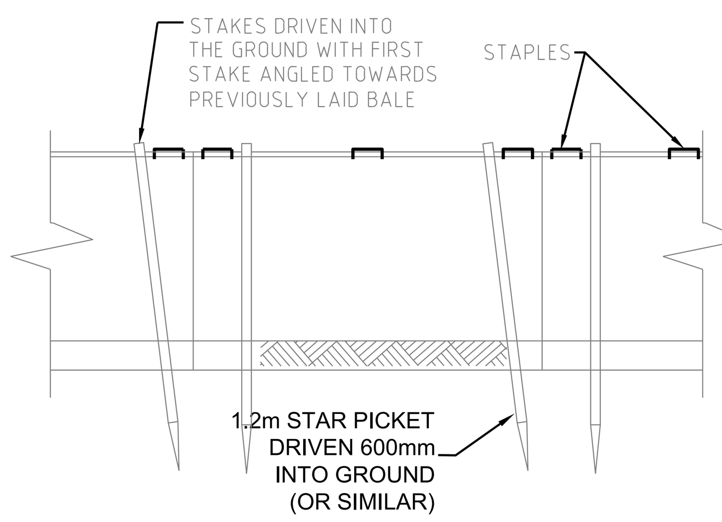

TYPICAL STRAW BALE DETAIL
NTS

STRAW BALE NOTES:-

1. CONSTRUCT STRAW BALE FILTER AS CLOSE AS POSSIBLE TO PARALLEL TO THE CONTOURS OF THE SITE OR AT THE TOE OF A SLOPE.
2. PLACE BALES LENGTHWISE IN A ROW WITH ENDS TIGHTLY ABUTTING. USE STRAW TO FILL ANY GAPS BETWEEN BALES. STRAWS TO BE PLACED PARALLEL TO GROUND.
3. MAXIMUM HEIGHT OF FILTER IS ONE BALE.
4. ON SOFT MATERIALS, EMBED EACH BALE IN THE GROUND 75mm TO 100mm AND ANCHOR WITH TWO 1.2 METRE STAR PICKETS. ANGLE THE FIRST STAKE IN EACH BALE TOWARDS THE PREVIOUSLY LAID BAIL. DRIVE STAKES 600mm INTO THE GROUND AND FLUSH WITH THE TOP OF THE BALES.
5. WHERE A STRAW BALE FILTER IS CONSTRUCTED DOWN SLOPE FROM A DISTURBED BATTER THE BALES SHOULD BE LOCATED 1.5 TO 2.0 METERS DOWN SLOPE FROM THE TOE OF THE BATTER.
6. WHERE REQUIRED WRAP GEOTEXTILE FILTER FABRIC AROUND BALES AND STAPLE IN POSITION.

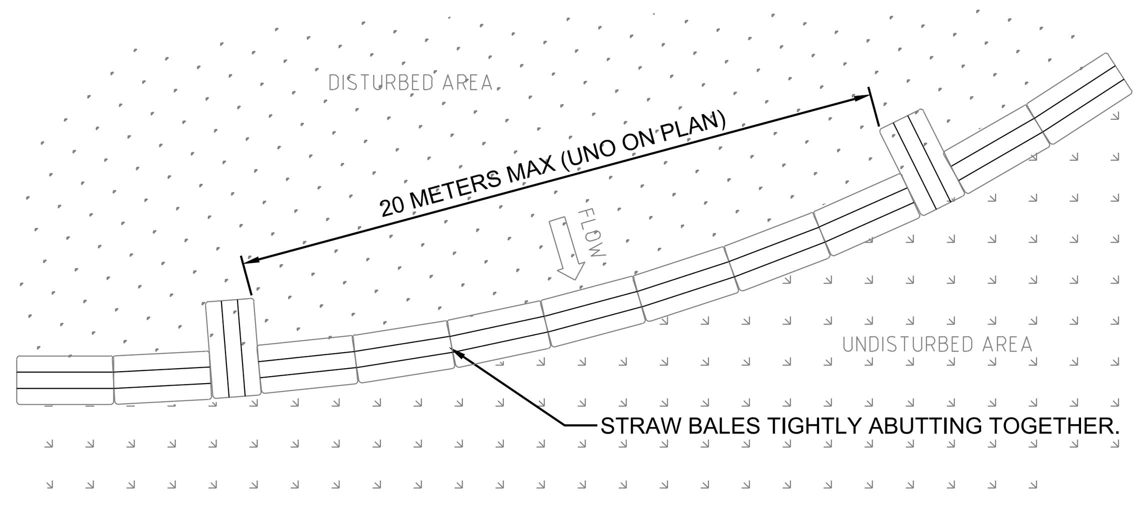

TYPICAL STRAW BALE LAYOUT PLAN
NTS

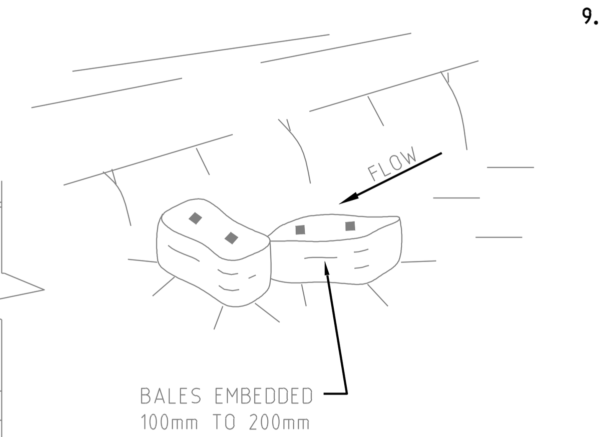

VIEW OF CHECK DAM

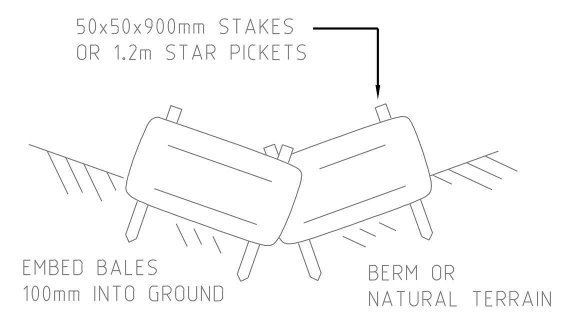

CHECK DAM SECTION

CHECK DAM SPACING TABLE

LONGITUDINAL GRADE (%)	SPACING (METERS)
0 - 5	40
5 -10	30
10 - 15	20
GREATER THAN 15	10

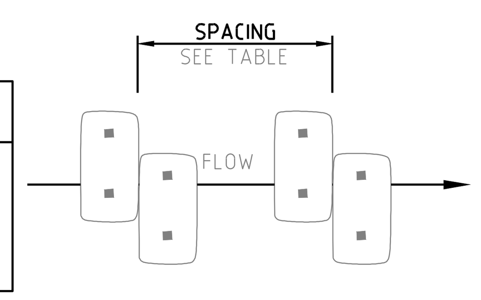

CHECK DAM PLAN

STRAW BALE CHECK DAM DETAILS
NTS

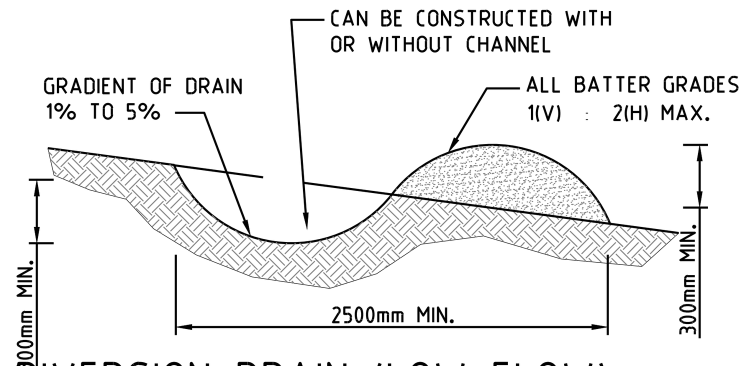

DIVERSION DRAIN (LOW FLOW)
NTS

DIVERSION DRAIN NOTES:-

1. CONSTRUCT WITH GRADIENT OF 1 PER CENT TO 5 PER CENT.
2. AVOID REMOVING TREES AND SHRUBS IF POSSIBLE.
3. DRAINS TO BE OF CIRCULAR, PARABOLIC OR TRAPEZOIDAL CROSS SECTION NOT V-SHAPED.
4. EARTH BANKS TO BE ADEQUATELY COMPACTED IN ORDER TO PREVENT FAILURE.
5. PERMANENT OR TEMPORARY STABILIZATION OF THE EARTH BANK TO BE COMPLETED WITHIN 10 DAYS OF CONSTRUCTION.
6. ALL OUTLETS FROM DISTURBED LANDS ARE TO FEED INTO A SEDIMENT BASIN OR SIMILAR.
7. DISCHARGE RUN OFF COLLECTED FROM UNDISTURBED LANDS ONTO EITHER A STABILIZED OR AN UNDISTURBED DISPOSAL SITE WITHIN THE SAME SUBCATCHMENT AREA FROM WHICH THE WATER ORIGINATED.
8. COMPACT BANK WITH A SUITABLE IMPLEMENT IN SITUATIONS WHERE THEY ARE REQUIRED TO FUNCTION FOR MORE THAN FIVE DAYS.
9. EARTH BANKS TO BE FREE OF PROJECTIONS OR OTHER IRREGULARITIES THAT WILL IMPEDE NORMAL FLOW.

MAINTENANCE REQUIREMENTS:-

1. ACCUMULATED SILT & SEDIMENT MUST BE REMOVED AT REGULAR INTERVALS AND AFTER EACH MAJOR STORM.
2. SILT & SEDIMENT MUST BE REMOVED FROM OFF THE SITE OR TO A COUNCIL APPROVED LOCATION WITHIN THE SITE, WHERE IT WILL NOT ERODE.
3. THE SEDIMENT FENCES, BALES & TRAPS SHALL BE REGULARLY INSPECTED, ESPECIALLY AFTER RAIN AND KEPT IN GOOD REPAIR AND FUNCTIONING CONDITION AT ALL TIMES.
4. CONSTRUCTION OPERATIONS SHALL BE CARRIED OUT IN SUCH A MANNER THAT SEDIMENT, EROSION & WATER POLLUTION SHALL BE MINIMIZED.
5. THE SEDIMENT TRAPS SHALL BE REMOVED AND THE AREA STABILIZED WHEN THE CONSTRUCTION AREA HAS BEEN PROPERLY STABILIZED.

PRELIMINARY - NOT FOR CONSTRUCTION

Xrefs: X-5914000-TB_A1H Plot Date: 20.07.2018@16:45:34 Login Name: JMello Cad File: T:\5914000\Drawings\AutoCAD\Civil\Design\Civil 2D\DA\C2.02 Sediment and Erosion Control Details.dwg

DO NOT SCALE FROM DRAWINGS, CHECK & VERIFY ALL DIMENSIONS & LEVELS BEFORE COMMENCEMENT OF ANY WORK.

THIS DRAWING IS NOT TO BE COPIED IN PART OR WHOLE WITHOUT WRITTEN PERMISSION FROM WARREN SMITH AND PARTNERS.

REVISION	AMENDMENT	DATE	REVISION	AMENDMENT	DATE
1	DEVELOPMENT APPLICATION	25/05/18			
2	DEVELOPMENT APPLICATION	19/07/18			

CLIENT: SYDNEY CATHOLIC SCHOOLS

PROJECT: ST ANTHONY OF PADUA CATHOLIC SCHOOL

PREPARED BY
Warren Smith & Partners
Warren Smith & Partners Pty Ltd
1st Floor, 123 Clarence Street, Sydney 2000 NSW Australia
T 02 9299 1312 F 02 9290 1295 wsp@warrensmith.com.au
www.warrensmith.com.au ABN 36 300 430 126
CONSULTING ENGINEERS
Hydraulic Services Fire Protection Civil Engineering
Sydney Water Accredited Water Servicing Co-ordinator
- Design Project Management - Building Plan Approvals
SERVING THE CONSTRUCTION INDUSTRY SINCE 1981.
Lic No: QAC/R61/0771

TITLE: **SEDIMENT AND EROSION CONTROL DETAILS**

SCALE	DRAWN	DESIGNED	CHECKED	APPROVED
AS SHOWN	M.CZ.	N.M.	L.Sh.	M.C.

JOB No.	DRAWING No.	ISSUE
5914000	C2.02	2

DATE	STATUS
MARCH 2018	DEVELOPMENT APPLICATION

0 10 20 30 40 50 60 70 80 90 100 110 120 130 140 150 SHEET SIZE: A1

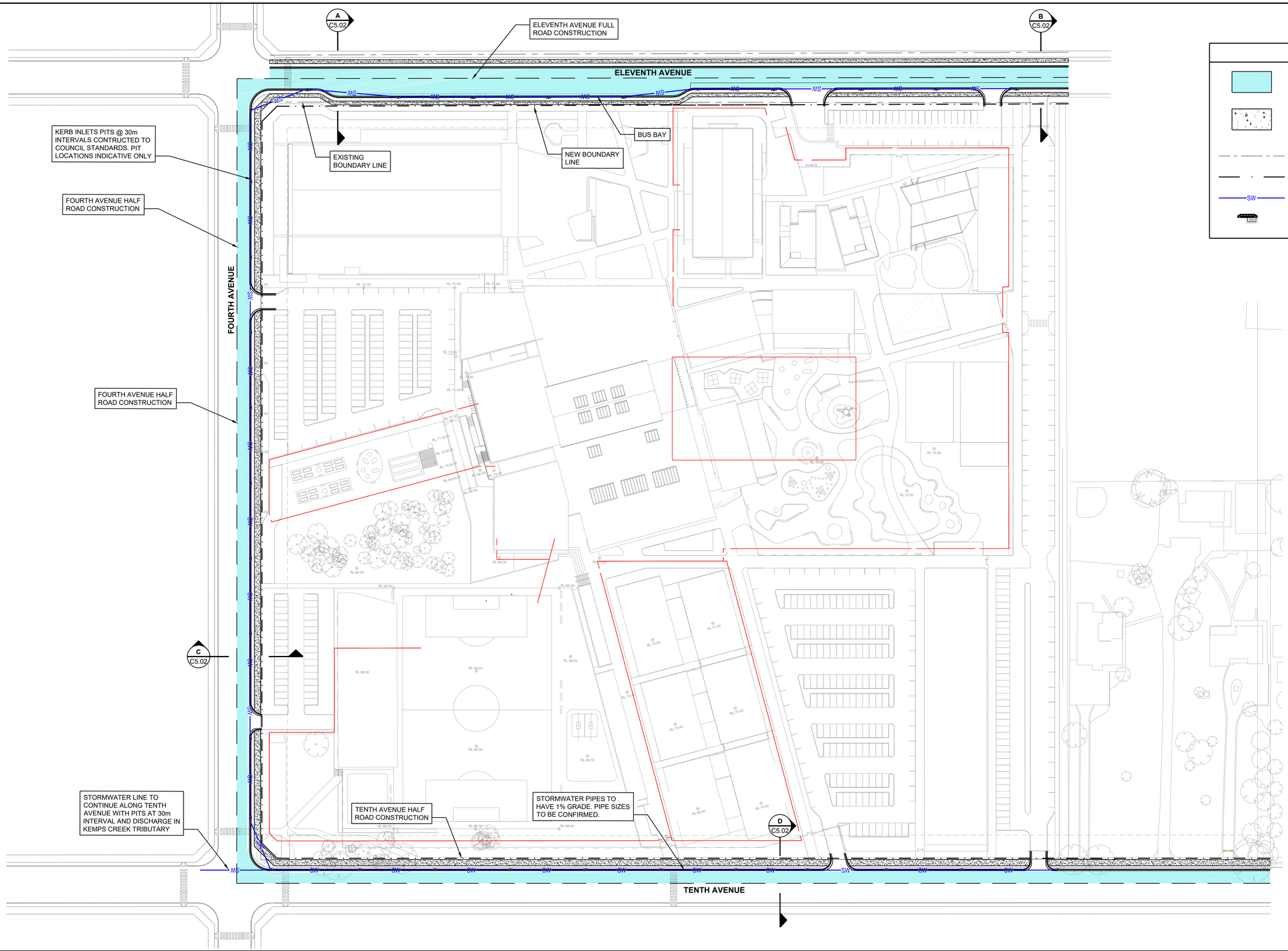

LEGEND

- EXTENT OF ROAD WORKS
- CONCRETE FOOTPATH PAVEMENT
- EXISTING BOUNDARY
- PROPOSED BOUNDARY
- SW — STORMWATER PIPE
- KERB INLET PIT (ON GRADE)

PRELIMINARY - NOT FOR CONSTRUCTION

DO NOT SCALE FROM DRAWINGS, CHECK & VERIFY ALL DIMENSIONS & LEVELS BEFORE COMMENCEMENT OF ANY WORK.

THIS DRAWING IS NOT TO BE COPIED IN PART OR WHOLE WITHOUT WRITTEN PERMISSION FROM WARREN SMITH AND PARTNERS.

NORTH

12.5 0 5 10 15 20 25m
PLAN SCALE 1:750 A1 SHEET

0 10 20 30 40 50 60 70 80 90 100 110 120 130 140 150
SHEET SIZE: A1

REVISION	AMENDMENT	DATE	REVISION	AMENDMENT	DATE
1	DEVELOPMENT APPLICATION	25/08/18			
2	DEVELOPMENT APPLICATION	19/07/18			

CLIENT
SYDNEY CATHOLIC SCHOOLS

PROJECT
ST ANTHONY OF PADUA CATHOLIC SCHOOL

PREPARED BY
Warren Smith & Partners
Warren Smith & Partners Pty Ltd
1st Floor, 123 Clarence Street, Sydney 2000 NSW Australia
T 02 9299 1312 F 02 9290 1295 wsp@warrensmith.com.au
www.warrensmith.com.au ABN 36 300 430 126
CONSULTING ENGINEERS
Hydraulic Services Fire Protection Civil Engineering
Sydney Water Accredited Water Servicing Co-ordinator
- Design Project Management - Building Plan Approvals
SERVING THE CONSTRUCTION INDUSTRY SINCE 1981.
Lic No. QAC/R61/0771

TITLE
OFF SITE WORKS PLAN

SCALE	DRAWN	DESIGNED	CHECKED	APPROVED
AS SHOWN	M.CZ.	N.M.	L.Sh.	M.C.

JOB No.	DRAWING No.	ISSUE
5914000	C5.01	2

DATE	STATUS
MARCH 2018	DEVELOPMENT APPLICATION

Xrefs: X-59140000-TB, A1H, X-59140000-AR, Ground, X-59140000-SU, Ground
Plotted: 26/07/2018@15:46:42 LogicNetwork\Wales Cloud\Jobs\5914000\Drawings\AutoCAD\Civil\Design\Civil 2D\C5.01 Off Site Works Plan.dwg

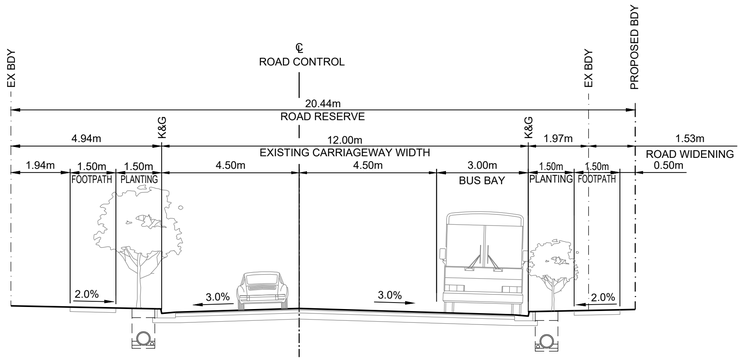

TYPICAL SECTION A - ELEVENTH AVENUE

SCALE 1:100

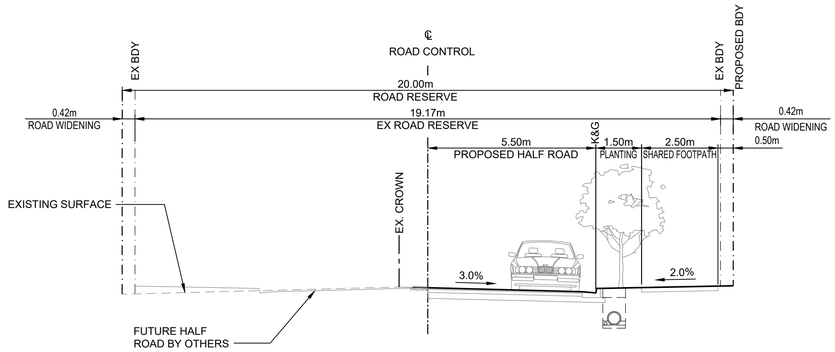

TYPICAL SECTION C - FOURTH AVENUE

SCALE 1:100

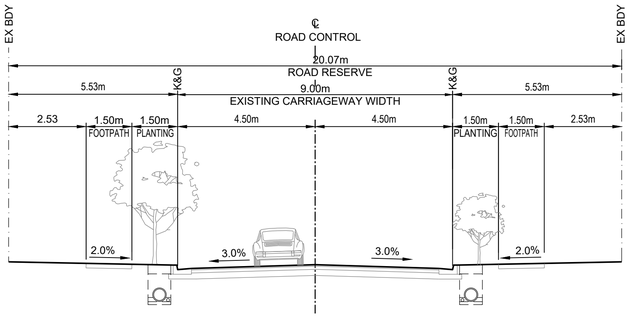

TYPICAL SECTION B - ELEVENTH AVENUE

SCALE 1:100

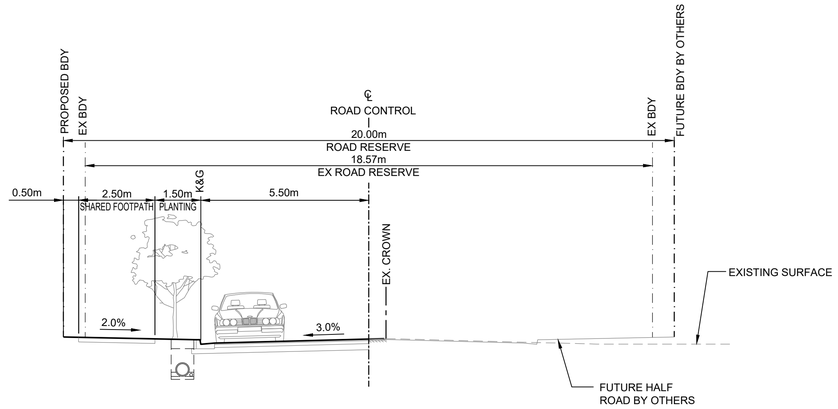

TYPICAL SECTION D - TENTH AVENUE

SCALE 1:100

PRELIMINARY - NOT FOR CONSTRUCTION

DO NOT SCALE FROM DRAWINGS, CHECK & VERIFY ALL DIMENSIONS & LEVELS BEFORE COMMENCEMENT OF ANY WORK.

THIS DRAWING IS NOT TO BE COPIED IN PART OR WHOLE WITHOUT WRITTEN PERMISSION FROM WARREN SMITH AND PARTNERS.

REVISION	AMENDMENT	DATE	REVISION	AMENDMENT	DATE
1	DEVELOPMENT APPLICATION	25/05/18			
2	DEVELOPMENT APPLICATION	19/07/18			

CLIENT
SYDNEY CATHOLIC SCHOOLS

PROJECT
ST ANTHONY OF PADUA CATHOLIC SCHOOL

PREPARED BY
Warren Smith & Partners
Warren Smith & Partners Pty Ltd
1st Floor, 123 Clarence Street, Sydney 2000 NSW Australia
T 02 9299 1312 F 02 9290 1295 wsp@warrensmith.com.au
www.warrensmith.com.au ABN 36 300 430 126
CONSULTING ENGINEERS
Hydraulic Services Fire Protection Civil Engineering
Sydney Water Accredited Water Servicing Co-ordinator
- Design Project Management - Building Plan Approvals
SERVING THE CONSTRUCTION INDUSTRY SINCE 1981.
Lic No: QAC/R61/0771

TITLE
ROAD TYPICAL SECTIONS

SCALE	DRAWN	DESIGNED	CHECKED	APPROVED
AS SHOWN	M.CZ.	N.M.	L.Sh.	M.C.

JOB No.	DRAWING No.	ISSUE
5914000	C5.02	2

DATE	STATUS
MARCH 2018	DEVELOPMENT APPLICATION

Cad File: T:\5914000\Drawings\AutoCAD\Civil\Design\Civil 2012\C5.02 Road Typical Sections.dwg
Xrefs: X:\5914000-TB_A1H-X-5914000-SU_Ground
Plot Date: 20/07/2018 | By: M.C. | Layo: Layout1 | Plot Style: Default

0 10 20 30 40 50 60 70 80 90 100 110 120 130 140 150

SHEET SIZE: A1

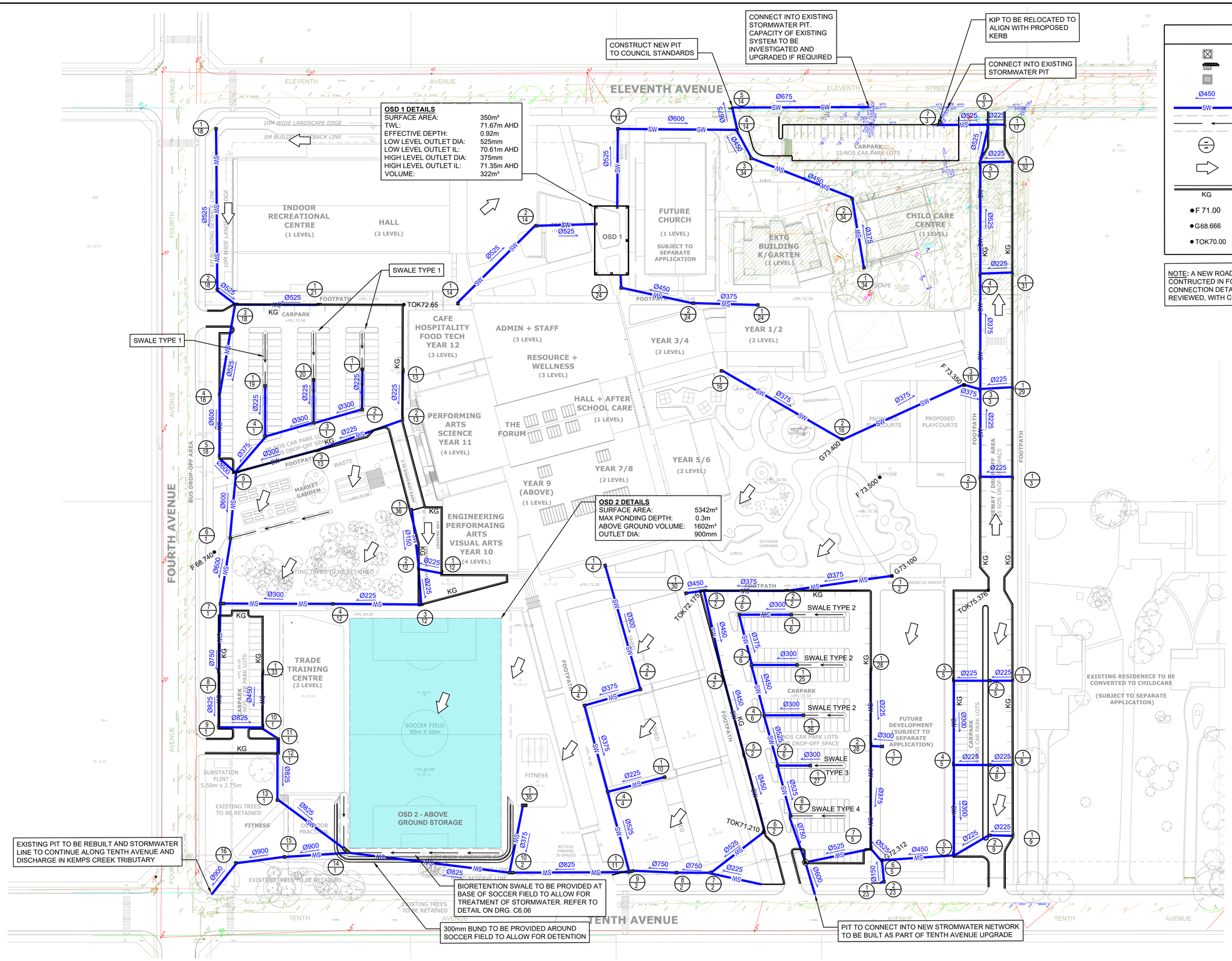

LEGEND

	900 x 900 JUNCTION PIT
	KERB INLET PIT (KIP)
	GRATED INLET PIT
Ø450	STORMWATER PIPE DIAMETER AND FLOW
SW	STORMWATER PIPE
	SWALE
	PIT STRUCTURE NUMBER / STORMWATER LINE NUMBER
	INDICATIVE OVERLAND FLOW ROUTE
KG	KERB AND GUTTER
●F 71.00	FINISHED LEVEL
●G68.666	GRATE LEVEL
●TOK70.00	TOP OF KERB LEVEL

NOTE: A NEW ROAD AND STORMWATER INFRASTRUCTURE WILL BE CONTRUCTED IN FOURTH, TENTH AND ELEVENTH AVENUES. CONNECTION DETAILS OF THE SITE STORMWATER SHALL BE REVIEWED, WITH COUNCIL'S APPROVAL, AT DETAILED DESIGN STAGE.

PRELIMINARY - NOT FOR CONSTRUCTION

DO NOT SCALE FROM DRAWINGS, CHECK & VERIFY ALL DIMENSIONS & LEVELS BEFORE COMMENCEMENT OF ANY WORK.

THIS DRAWING IS NOT TO BE COPIED IN PART OR WHOLE WITHOUT WRITTEN PERMISSION FROM WARREN SMITH AND PARTNERS.

NORTH

PLAN SCALE 1:750 A1 SHEET

REVISION	AMENDMENT	DATE	REVISION	AMENDMENT	DATE
1	DEVELOPMENT APPLICATION	25/05/18			
2	DEVELOPMENT APPLICATION	19/07/18			

CLIENT
SYDNEY CATHOLIC SCHOOLS

PROJECT
ST ANTHONY OF PADUA CATHOLIC SCHOOL

PREPARED BY
Warren Smith & Partners
Warren Smith & Partners Pty Ltd
1st Floor, 123 Clarence Street, Sydney 2000 NSW Australia
T 02 9299 1312 F 02 9290 1295 wsp@warrensmith.com.au
www.warrensmith.com.au ABN 36 300 430 126
CONSULTING ENGINEERS
Hydraulic Services Fire Protection Civil Engineering
Sydney Water Accredited Water Servicing Co-ordinator
- Design Project Management - Building Plan Approvals
SERVING THE CONSTRUCTION INDUSTRY SINCE 1981.
Lic No: QAC/95107/71

TITLE
STORMWATER LAYOUT PLAN

SCALE	DRAWN	DESIGNED	CHECKED	APPROVED
AS SHOWN	M.CZ.	N.M.	L.Sh.	M.C.
JOB No. 5914000		DRAWING No. C6.01		ISSUE 2
DATE MARCH 2018		STATUS DEVELOPMENT APPLICATION		

SHEET SIZE: A1

Pit Name	Surface Elev. (m)	Pit Depth (m)	Pit Size and Type	From	To	Length (m)	U/S IL (m)	D/S IL (m)	Slope (%)	Pipe Type	Pipe Dia.	No. Pipes
Pit 1/1	71.37	0.83	900SQ Pit, Class C Grate	Pit 1/1	Pit 2/1	14.92	70.54	70.1	2.95	RCP(CLASS 3)	225	1
Pit 2/1	70.93	0.91	900SQ Pit, Class C Grate	Pit 2/1	Pit 3/1	19.14	70.02	69.6	2.19	RCP(CLASS 3)	300	1
Pit 3/1	70.5	0.93	900SQ Pit, Class C Grate	Pit 3/1	Pit 4/1	19.29	69.57	69.14	2.23	RCP(CLASS 3)	300	1
Pit 4/1	70.05	1.02	900SQ Pit, Class C Grate	Pit 4/1	Pit 5/1	17.88	69.03	68.8	1.29	uPVC (SN8)	375	1
Pit 5/1	70.13	2.3	600x900 Class D Grate, 1.8m Lintel	Pit 5/1	Pit 6/1	25.44	67.83	66.93	3.54	RCP(CLASS 3)	600	1
Pit 6/1	68.77	1.87	900SQ, Class B Grate	Pit 6/1	Pit 7/1	25.04	66.9	66.4	2	RCP(CLASS 3)	600	1
Pit 7/1	67.5	1.28	2 x 900SQ, Class B Grate	Pit 7/1	Pit 8/1	25.94	66.22	65.69	2.04	RCP(CLASS 3)	750	1
Pit 8/1	67	1.34	600x900 Class D Grate, 1.8m Lintel	Pit 8/1	Pit 9/1	20.75	65.66	65.4	1.25	RCP(CLASS 3)	825	1
Pit 9/1	66.8	1.43	600x900 Class D Grate, 1.8m Lintel	Pit 9/1	Pit 10/1	16.6	65.37	65.2	1.02	RCP(CLASS 3)	825	1
Pit 10/1	66.8	1.63	600x900 Class D Grate, 1.8m Lintel	Pit 10/1	Pit 11/1	7.09	65.17	65.06	1.55	RCP(CLASS 3)	825	1
Pit 11/1	66.6	1.57	600x900 Class D Grate, 1.8m Lintel	Pit 11/1	Pit 12/1	5.1	65.03	64.95	1.57	RCP(CLASS 3)	825	1
Pit 12/1	66.6	1.68	600x900 Class D Grate, 1.8m Lintel	Pit 12/1	Pit 13/1	17.79	64.92	64.74	1.01	RCP(CLASS 3)	825	1
Pit 13/1	66.4	1.69	900SQ Pit, Class C Cover	Pit 13/1	Pit 14/1	31.62	64.71	64.39	1.01	RCP(CLASS 3)	825	1
Pit 14/1	66.3	2.06	2 x 900SQ, Class B Grate	Pit 14/1	Pit 15/1	28.3	64.24	64.09	0.53	RCP(CLASS 3)	900	1
Pit 15/1	65.6	1.54	900SQ Pit, Class C Grate	Pit 15/1	Pit 16/1	28.3	64.06	63.91	0.53	RCP(CLASS 3)	900	1
Pit 16/1	65.6	1.72	900SQ Pit, Class C Grate	Pit 16/1	Ex. Pit	15.38	63.88	63.8	0.52	RCP(CLASS 3)	900	1
Pit 1/2	73.1	0.98	1200SQ Pit, Class B Grate	Pit 1/2	Pit 2/2	41.08	72.12	71.37	1.83	RCP(CLASS 3)	375	1
Pit 2/2	72.35	1.01	900SQ Pit with 600x900 Class D Grate, 1.8m Lintel	Pit 2/2	Pit 3/2	31.11	71.34	71.02	1.03	RCP(CLASS 3)	375	1
Pit 3/2	72.03	1.12	900SQ Pit with 600x900 Class D Grate, 1.8m Lintel	Pit 3/2	Pit 4/2	32.98	70.91	70.67	0.73	RCP(CLASS 3)	450	1
Pit 4/2	71.72	1.08	900SQ Pit with 600x900 Class D Grate, 1.8m Lintel	Pit 4/2	Pit 5/2	32.12	70.64	70.27	1.15	RCP(CLASS 3)	450	1
Pit 5/2	71.32	1.08	900SQ Pit with 600x900 Class D Grate, 1.8m Lintel	Pit 5/2	Pit 6/2	29.57	70.24	70.01	0.78	RCP(CLASS 3)	450	1
Pit 6/2	71.06	1.16	900SQ Pit with 600x900 Class D Grate, 1.8m Lintel	Pit 6/2	Pit 7/2	26.4	69.9	69.52	1.44	RCP(CLASS 3)	525	1
Pit 7/2	70.65	1.35	900SQ Pit, Class B Grate	Pit 7/2	Pit 8/2	12.51	69.3	68.56	5.92	RCP(CLASS 3)	750	1
Pit 8/2	69.91	1.38	900SQ Pit, Class B Grate	Pit 8/2	Pit 9/2	17.59	68.53	67.74	4.49	RCP(CLASS 3)	750	1
Pit 9/2	69.73	2.02	2 x 900SQ, Class B Grate	Pit 9/2	Pit 10/2	44.7	67.71	64.98	6.11	RCP(CLASS 3)	825	1
Pit 10/2	67.93	2.98	2 x 900SQ, Class B Grate	Pit 10/2	Pit 14/1	63.17	64.95	64.47	0.76	RCP(CLASS 3)	825	1
Pit 1/3	74.33	0.83	900SQ Pit with 600x900 Class D Grate, 1.8m Lintel	Pit 1/3	Pit 2/3	11.95	73.5	73.38	1	RCP(CLASS 3)	225	1
Pit 2/3	74.33	0.98	900SQ Pit with 600x900 Class D Grate, 1.8m Lintel	Pit 2/3	Pit 3/3	33.53	73.35	72.9	1.34	RCP(CLASS 3)	225	1
Pit 3/3	73.73	2.78	900SQ Pit with 600x900 Class D Grate, 1.8m Lintel	Pit 3/3	Pit 4/3	44.3	70.95	70.72	0.52	RCP(CLASS 3)	450	1
Pit 4/3	72.91	2.22	900SQ Pit with 600x900 Class D Grate, 1.8m Lintel	Pit 4/3	Pit 5/3	42.75	70.69	70.51	0.42	RCP(CLASS 3)	525	1
Pit 5/3	72.12	1.64	900SQ Pit with 600x900 Class D Grate, 1.8m Lintel	Pit 5/3	Pit 6/3	14.19	70.48	70.43	0.35	RCP(CLASS 3)	600	1
Pit 6/3	71.85	1.45	900SQ Pit with 600x900 Class D Grate, 1.8m Lintel	Pit 6/3	Pit 7/3	17.88	70.4	70.34	0.34	RCP(CLASS 3)	600	1
Pit 7/3	71.78	1.48	900SQ Pit with 600x900 Class D Grate, 1.8m Lintel	Pit 7/3	Ex. Pit 3	7.28	70.3	70.27	0.41	uPVC (SN8)	375	1
Pit 1/4	71.2	0.75	900SQ Pit, Class B Grate	Pit 1/4	Pit 2/4	49.6	70.45	69.95	1.01	RCP(CLASS 3)	300	1
Pit 2/4	71.21	1.37	900SQ Pit, Class B Grate	Pit 2/4	Pit 3/4	21.91	69.84	69.62	1	RCP(CLASS 3)	375	1
Pit 3/4	71.04	1.45	900SQ Pit, Class B Grate	Pit 3/4	Pit 4/4	34.14	69.59	69.24	1.03	RCP(CLASS 3)	375	1
Pit 4/4	70.7	1.64	1200SQ Pit, Class B Grate	Pit 4/4	Pit 9/2	22	69.06	68.29	3.5	RCP(CLASS 3)	525	1
Pit 1/5	75.02	0.83	900SQ Pit with 600x900 Class D Grate, 1.8m Lintel	Pit 1/5	Pit 2/5	8.1	74.19	74.1	1.11	RCP(CLASS 3)	225	1
Pit 2/5	75.016	0.946	900SQ Pit, Class B Grate	Pit 2/5	Pit 3/5	13.22	74.07	73.93	1.06	RCP(CLASS 3)	225	1
Pit 3/5	74.9	1.08	900SQ Pit with 600x900 Class D Grate, 1.8m Lintel	Pit 3/5	Pit 4/5	32.12	73.82	73.49	1.03	RCP(CLASS 3)	300	1
Pit 4/5	74.66	1.38	900SQ Pit with 600x900 Class D Grate, 1.8m Lintel	Pit 4/5	Pit 5/5	34.53	73.28	72.93	1.01	RCP(CLASS 3)	300	1
Pit 5/5	73.98	1.16	900SQ Pit with 600x900 Class D Grate, 1.8m Lintel	Pit 5/5	Pit 6/5	27.61	72.82	71.26	5.65	RCP(CLASS 3)	450	1
Pit 6/5	72.31	1.16	900SQ Pit, Class B Grate	Pit 6/5	Pit 7/5	9.77	71.15	70.63	5.32	RCP(CLASS 3)	525	1
Pit 7/5	72.15	1.55	900SQ Pit with 600x900 Class D Grate, 1.8m Lintel	Pit 7/5	Pit 7/6	24.7	70.6	69.87	2.96	RCP(CLASS 3)	525	1
Pit 1/6	72.03	0.75	900SQ Pit, Class C Grate	Pit 1/6	Pit 2/6	19.44	71.28	71	1.44	uPVC (SN8)	300	1
Pit 2/6	71.75	0.98	900SQ Pit, Class C Grate	Pit 2/6	Pit 3/6	19.36	70.77	70.62	0.77	RCP(CLASS 3)	375	1
Pit 3/6	71.6	1.09	900SQ Pit, Class C Grate	Pit 3/6	Pit 4/6	19.18	70.51	70.35	0.83	RCP(CLASS 3)	450	1
Pit 4/6	71.41	1.17	900SQ Pit, Class C Grate	Pit 4/6	Pit 5/6	19.52	70.24	70.04	1.02	RCP(CLASS 3)	525	1
Pit 5/6	71.17	1.16	900SQ Pit, Class C Grate	Pit 5/6	Pit 6/6	19.48	70.01	69.45	2.87	RCP(CLASS 3)	525	1
Pit 6/6	70.85	1.43	900SQ Pit, Class C Grate	Pit 6/6	Pit 7/6	17.43	69.42	69.38	0.23	RCP(CLASS 3)	750	1
Pit 7/6	71	1.82	2500 dia. Stormwater360 Treatment Manhole with 2 x 690 Psorb Stormfilters, Class D Grate	Pit 7/6	N5	12	69.18	69.15	0.25	RCP(CLASS 3)	600	1
Pit 1/7	72.63	0.92	900SQ Pit, Class B Grate	Pit 1/7	Pit 2/28	3.9	71.71	71.53	4.62	uPVC (SN8)	300	1
Pit 1/8	74.78	1.13	900SQ Pit with 600x900 Class D Grate, 1.8m Lintel	Pit 1/8	Pit 2/8	8.13	73.65	73.56	1.11	RCP(CLASS 3)	225	1
Pit 2/8	74.78	1.25	900SQ Pit, Class B Grate	Pit 2/8	Pit 4/5	13.37	73.53	73.39	1.05	RCP(CLASS 3)	225	1
Pit 1/9	74.42	0.83	900SQ Pit with 600x900 Class D Grate, 1.8m Lintel	Pit 1/9	Pit 2/9	8.24	73.59	73.5	1.09	RCP(CLASS 3)	225	1
Pit 2/9	74.42	0.95	900SQ Pit, Class B Grate	Pit 2/9	Pit 5/5	15.5	73.47	72.93	3.48	RCP(CLASS 3)	225	1
Pit 1/10	70.87	0.72	900SQ Pit, Class B Grate	Pit 1/10	Pit 4/4	31.68	70.15	69.83	1.01	RCP(CLASS 3)	225	1
Pit 1/11 (GD)	69.73	1.16	ACO K300 Graded Trench Drain	Pit 1/11 (GD)	Pit 9/2	0.7	68.57	68.5	10	uPVC (SN8)	150	1

PRELIMINARY - NOT FOR CONSTRUCTION

DO NOT SCALE FROM DRAWINGS, CHECK & VERIFY ALL DIMENSIONS & LEVELS BEFORE COMMENCEMENT OF ANY WORK.

THIS DRAWING IS NOT TO BE COPIED IN PART OR WHOLE WITHOUT WRITTEN PERMISSION FROM WARREN SMITH AND PARTNERS.

REVISION	AMENDMENT	DATE	REVISION	AMENDMENT	DATE
1	DEVELOPMENT APPLICATION	25/05/18			
2	DEVELOPMENT APPLICATION	19/07/18			

CLIENT
SYDNEY CATHOLIC SCHOOLS

PROJECT
ST ANTHONY OF PADUA CATHOLIC SCHOOL

PREPARED BY
Warren Smith & Partners Pty Ltd
1st Floor, 123 Clarence Street, Sydney 2000 NSW Australia
T 02 9299 1312 F 02 9290 1295 wsp@warrensmith.com.au
www.warrensmith.com.au ABN 36 300 430 126
CONSULTING ENGINEERS
Hydraulic Services · Fire Protection · Civil Engineering
Sydney Water Accredited Water Servicing Co-ordinator
- Design Project Management - Building Plan Approvals
SERVING THE CONSTRUCTION INDUSTRY SINCE 1981.
Lic No: QAC/R61/0771

TITLE
STORMWATER PIT SCHEDULE SHEET 1

SCALE	DRAWN	DESIGNED	CHECKED	APPROVED
AS SHOWN	M.CZ.	N.M.	L.Sh.	M.C.

JOB No.	DRAWING No.	ISSUE
5914000	C6.02	2

DATE: MARCH 2018
STATUS: DEVELOPMENT APPLICATION

Xrefs: X-5914000-TB_A1H
Plot Date: 20.07.2018@16:46:09 Login Name: JMello Cad File: T:\5914000\Drawings\AutoCAD\Civil\Design\Civil 2D\DA\C6.02 Stormwater Pit Schedule Sheet 1.dwg

0 10 20 30 40 50 60 70 80 90 100 110 120 130 140 150

Pit 1/12	68.74	0.75	900SQ Pit with 600x900 Class D Grate, 1.8m Lintel	Pit 1/12	Pit 2/12	8.46	67.99	67.9	1.06	RCP(CLASS 3)	225	1
Pit 2/12	68.76	0.97	900SQ Pit with 600x900 Class D Grate, 1.8m Lintel	Pit 2/12	Pit 3/12	13.11	67.79	67.65	1.07	RCP(CLASS 3)	225	1
Pit 3/12	68.63	1.09	900SQ Pit with 600x900 Class D Grate, 1.8m Lintel	Pit 3/12	Pit 4/12	33.83	67.54	67.2	1.01	uPVC (SN8)	300	1
Pit 4/12	68.5	1.41	900SQ Pit, Class B Grate	Pit 4/12	Pit 7/1	41.87	67.09	66.46	1.5	RCP(CLASS 3)	450	1
Pit 1/13	71.56	0.83	900SQ Pit with 600x900 Class D Grate, 1.8m Lintel	Pit 1/13	Pit 2/13	18.14	70.73	70.32	2.26	RCP(CLASS 3)	225	1
Pit 2/13	71.15	0.86	900SQ Pit with 2 x 600x900 Class D Grate, 3m Lintel	Pit 2/13	Pit 3/13	34.85	70.29	69.8	1.41	RCP(CLASS 3)	225	1
Pit 3/13	70.63	0.86	900SQ Pit with 600x900 Class D Grate, 1.8m Lintel	Pit 3/13	Pit 5/1	32.43	69.77	69.23	1.67	RCP(CLASS 3)	300	1
Pit 1/14	72.57	1.16	900SQ Pit, Class B Grate	Pit 1/14	Pit 2/14	39.46	71.41	71.21	0.51	RCP(CLASS 3)	525	1
Pit 2/14	72.15	0.97	900SQ Pit, Class B Grate	Pit 2/14	OSD 1	23.17	71.18	71.08	0.43	RCP(CLASS 3)	525	1
				OSD 1	Pit 3/14	29.86	70.61	70.49	0.4	RCP(CLASS 3)	525	1
Pit 3/14	72.75	2.29	900SQ Pit, Class B Grate	Pit 3/14	Pit 4/14	45.78	70.46	70.27	0.42	RCP(CLASS 3)	600	1
Pit 4/14	72.24	2.08	900SQ Pit, Class B Grate	Pit 4/14	Pit 5/14	8.83	70.16	70.12	0.45	RCP(CLASS 3)	675	1
Pit 5/14	72.16	2.07	900SQ Pit with 600x900 Class D Grate, 1.8m Lintel	Pit 5/14	Ex. Pit 2	53.04	70.09	69.82	0.51	RCP(CLASS 3)	675	1
Pit 1/15 (GD)	70.75	0.69	ACO K300 Graded Trench Drain	Pit 1/15 (GD)	Pit 7/2	20.23	70.06	69.85	1.04	RCP(CLASS 3)	225	1
Pit 1/16	73.2	1.83	900SQ Pit, Class B Grate	Pit 1/16	Pit 2/16	39.88	71.37	71.23	0.35	RCP(CLASS 3)	450	1
Pit 2/16	73.4	2.2	900SQ Pit, Class B Grate	Pit 2/16	Pit 3/16	51.47	71.2	71.03	0.33	RCP(CLASS 3)	450	1
Pit 3/16	73.35	2.35	900SQ Pit, Class B Grate	Pit 3/16	Pit 3/3	6	71	70.98	0.33	RCP(CLASS 3)	450	1
Pit 1/17	71.85	1.36	900SQ Pit with 600x900 Class D Grate, 1.8m Lintel	Pit 1/17	Pit 6/3	5.85	70.49	70.43	1.03	uPVC (SN8)	525	1
Pit 1/18	72.37	0.98	900SQ Pit, Class B Grate	Pit 1/18	Pit 2/18	62.52	71.39	70.69	1.12	RCP(CLASS 3)	525	1
Pit 2/18	71.67	1.13	900SQ Pit, Class B Grate	Pit 2/18	Pit 3/18	8.78	70.54	70.36	2.05	RCP(CLASS 3)	525	1
Pit 3/18	71.51	1.16	900SQ Pit with 600x900 Class D Grate, 1.8m Lintel	Pit 3/18	Pit 4/18	35.4	70.35	69.36	2.8	RCP(CLASS 3)	525	1
Pit 4/18	70.54	1.29	900SQ Pit with 600x900 Class D Grate, 1.8m Lintel	Pit 4/18	Pit 5/18	23.21	69.25	68.21	4.48	RCP(CLASS 3)	600	1
Pit 5/18	69.96	1.78	900SQ Pit with 600x900 Class D Grate, 1.8m Lintel	Pit 5/18	Pit 5/1	8.02	68.18	67.86	3.99	RCP(CLASS 3)	600	1
Pit 1/19	70.61	0.83	900SQ Pit, Class B Grate	Pit 1/19	Pit 4/1	19.05	69.78	69.22	2.94	RCP(CLASS 3)	225	1
Pit 1/20	70.99	0.83	900SQ Pit, Class B Grate	Pit 1/20	Pit 3/1	16.86	70.16	69.67	2.91	RCP(CLASS 3)	225	1
Pit 1/21	72	1.21	900SQ Pit with 600x900 Class D Grate, 1.8m Lintel	Pit 1/21	Pit 3/18	31.72	70.79	70.38	1.29	RCP(CLASS 3)	525	1
Pit 1/23 (GD)	72.5	0.6	ACO K300 Graded Trench Drain	Pit 1/23 (GD)	Pit 2/23	1.09	71.9	71.88	1.84	uPVC (SN8)	150	1
Pit 2/23	72.5	0.75	900SQ Pit, Class B Grate	Pit 2/23	Pit 6/5	7.62	71.75	71.57	2.36	uPVC (SN8)	300	1
Pit 1/24	72.35	0.8	900SQ Pit, Class B Grate	Pit 1/24	Pit 2/24	24.41	71.55	71.3	1.02	RCP(CLASS 3)	300	1
Pit 2/24	72.3	1.03	900SQ Pit, Class B Grate	Pit 2/24	Pit 3/24	27.96	71.27	70.99	1	RCP(CLASS 3)	450	1
Pit 3/24	72.25	1.29	900SQ Pit, Class B Grate	Pit 3/24	OSD 1	4.74	70.96	70.8	3.38	RCP(CLASS 3)	450	1
Pit 1/25	71.77	0.75	900SQ Pit, Class B Grate	Pit 1/25	Pit 3/6	16.87	71.02	70.85	1.01	uPVC (SN8)	300	1
Pit 1/26	71.55	0.75	900SQ Pit, Class B Grate	Pit 1/26	Pit 4/6	14.47	70.8	70.66	0.97	uPVC (SN8)	300	1
Pit 1/27	71.29	0.75	900SQ Pit, Class B Grate	Pit 1/27	Pit 5/6	11.88	70.54	70.42	1.01	uPVC (SN8)	300	1
Pit 1/28	72.64	0.82	900SQ Pit with 600x900 Class D Grate, 1.8m Lintel	Pit 1/28	Pit 2/28	29.1	71.82	71.52	1.03	RCP(CLASS 3)	225	1
Pit 2/28	72.43	1.1	900SQ Pit with 600x900 Class D Grate, 1.8m Lintel	Pit 2/28	Pit 7/5	37.88	71.33	70.95	1	RCP(CLASS 3)	375	1
Pit 1/29	73.73	0.9	900SQ Pit with 600x900 Class D Grate, 1.8m Lintel	Pit 1/29	Pit 3/3	11.97	72.83	72.77	0.5	RCP(CLASS 3)	225	1
Pit 1/30	72.24	0.9	900SQ Pit, Class B Grate	Pit 1/30	Pit 3/2	6.2	71.34	70.95	6.29	RCP(CLASS 3)	450	1
Pit 1/31	72.91	1.42	900SQ Pit with 600x900 Class D Grate, 1.8m Lintel	Pit 1/31	Pit 4/3	11.96	71.49	71.37	1	RCP(CLASS 3)	225	1
Pit 1/32	72.12	0.83	900SQ Pit with 600x900 Class D Grate, 1.8m Lintel	Pit 1/32	Pit 5/3	11.95	71.29	71.17	1	RCP(CLASS 3)	225	1
Pit 1/33	67	1.09	900SQ Pit with 600x900 Class D Grate, 1.8m Lintel	Pit 1/33	Pit 10/1	20.56	65.91	65.35	2.72	RCP(CLASS 3)	450	1
Pit 1/34	72.24	1.12	900SQ Pit, Class B Grate	Pit 1/34	Pit 2/34	24.93	71.12	70.87	1	RCP(CLASS 3)	450	1
Pit 2/34	72.08	1.24	900SQ Pit, Class B Grate	Pit 2/34	Pit 3/34	42.75	70.84	70.62	0.51	RCP(CLASS 3)	450	1
Pit 3/34	72.43	1.84	900SQ Pit, Class B Grate	Pit 3/34	Pit 4/14	11.67	70.59	70.47	1.03	RCP(CLASS 3)	450	1
Pit 1/35	68.5		2 x 900SQ Pit, Class B Grate	Pit 1/35	Pit 10/2	25.95	67.6	66.82	3.01	RCP(CLASS 3)	300	1
Pit 1/36	69.0		ACO K300 Graded Trench Drain	Pit 1/36	Pit 2/12	22.83	68.25	67.9	1.53	RCP(CLASS 3)	150	1

PRELIMINARY - NOT FOR CONSTRUCTION

DO NOT SCALE FROM DRAWINGS, CHECK & VERIFY ALL DIMENSIONS & LEVELS BEFORE COMMENCEMENT OF ANY WORK.

THIS DRAWING IS NOT TO BE COPIED IN PART OR WHOLE WITHOUT WRITTEN PERMISSION FROM WARREN SMITH AND PARTNERS.

REVISION	AMENDMENT	DATE	REVISION	AMENDMENT	DATE
1	DEVELOPMENT APPLICATION	25/05/18			
2	DEVELOPMENT APPLICATION	19/07/18			

CLIENT

SYDNEY CATHOLIC SCHOOLS

PROJECT

ST ANTHONY OF PADUA CATHOLIC SCHOOL

PREPARED BY

Warren Smith & Partners

Warren Smith & Partners Pty Ltd
1st Floor, 123 Clarence Street, Sydney 2000 NSW Australia
T 02 9299 1312 F 02 9290 1295 wsp@warrensmith.com.au
www.warrensmith.com.au ABN 36 300 430 126

CONSULTING ENGINEERS
Hydraulic Services Fire Protection Civil Engineering
Sydney Water Accredited Water Servicing Co-ordinator
- Design Project Management - Building Plan Approvals

SERVING THE CONSTRUCTION INDUSTRY SINCE 1981.

Lic No: QAC/RI61077/1

TITLE

STORMWATER PIT SCHEDULE SHEET 2

SCALE	DRAWN	DESIGNED	CHECKED	APPROVED
AS SHOWN	M.CZ.	N.M.	L.Sh.	M.C.

JOB No.	DRAWING No.	ISSUE
5914000	C6.03	2

DATE	STATUS
MARCH 2018	DEVELOPMENT APPLICATION

Xrefs: X-5914000-TB, A1H
Plot Date: 20.07.2018@16:46:14 Login Name: JMello Cad File: T:\5914000\Drawings\AutoCAD\Civil\Design\Civil 2D\DA\C6.03 Stormwater Pit Schedule Sheet 2.dwg

0 10 20 30 40 50 60 70 80 90 100 110 120 130 140 150

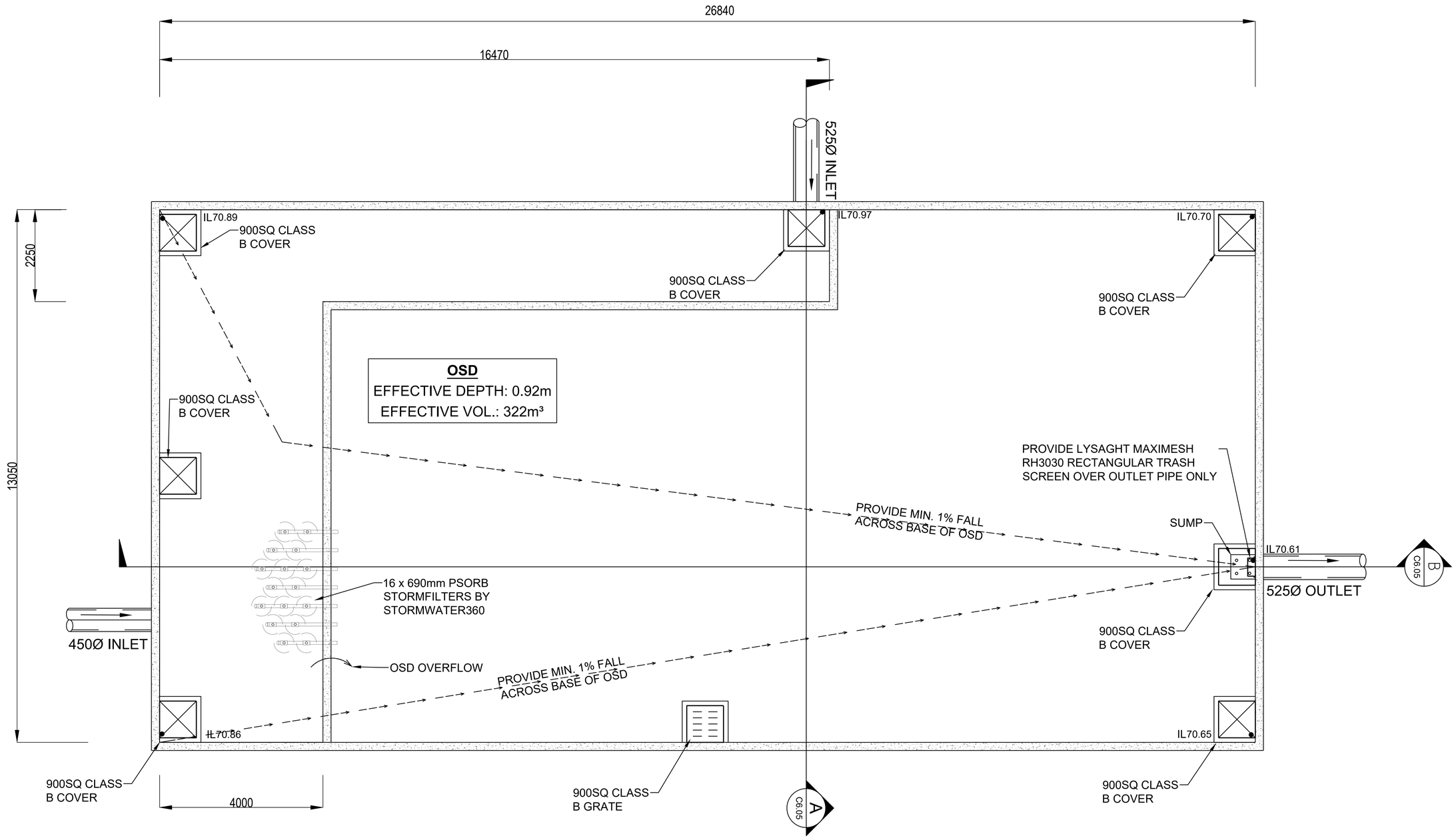

ON SITE DETENTION TANK PLAN

SCALE: 1:50

PRELIMINARY - NOT FOR CONSTRUCTION

DO NOT SCALE FROM DRAWINGS, CHECK & VERIFY ALL DIMENSIONS & LEVELS BEFORE COMMENCEMENT OF ANY WORK.

THIS DRAWING IS NOT TO BE COPIED IN PART OR WHOLE WITHOUT WRITTEN PERMISSION FROM WARREN SMITH AND PARTNERS.

1000 0 500 1000 1500 2000mm
PLAN SCALE 1:50 A1 SHEET

REVISION	AMENDMENT	DATE	REVISION	AMENDMENT	DATE
1	DEVELOPMENT APPLICATION	25/05/18			
2	DEVELOPMENT APPLICATION	19/07/18			

CLIENT
SYDNEY CATHOLIC SCHOOLS

PROJECT
ST ANTHONY OF PADUA CATHOLIC SCHOOL

PREPARED BY
Warren Smith & Partners
Warren Smith & Partners Pty Ltd
1st Floor, 123 Clarence Street, Sydney 2000 NSW Australia
T 02 9299 1312 F 02 9290 1295 wsp@warrensmith.com.au
www.warrensmith.com.au ABN 36 300 430 126
CONSULTING ENGINEERS
Hydraulic Services Fire Protection Civil Engineering
Sydney Water Accredited Water Servicing Co-ordinator
- Design Project Management - Building Plan Approvals
SERVING THE CONSTRUCTION INDUSTRY SINCE 1981.
Lic No: QAC/RB10771

TITLE
OSD TANK 1 PLAN

SCALE	DRAWN	DESIGNED	CHECKED	APPROVED
AS SHOWN	M.CZ.	N.M.	L.Sh.	M.C.

JOB No.	DRAWING No.	ISSUE
5914000	C6.04	2

DATE	STATUS
MARCH 2018	DEVELOPMENT APPLICATION

Xrefs: X-5914000-TB, A1H
Plot Date: 20/07/2018@16:46:19 Login Name: JMello Cad File: T:\5914000\Drawings\AutoCAD\Civil\Design\Civil 2D\DA\C6.04 OSD Tank Plan & Sections.dwg

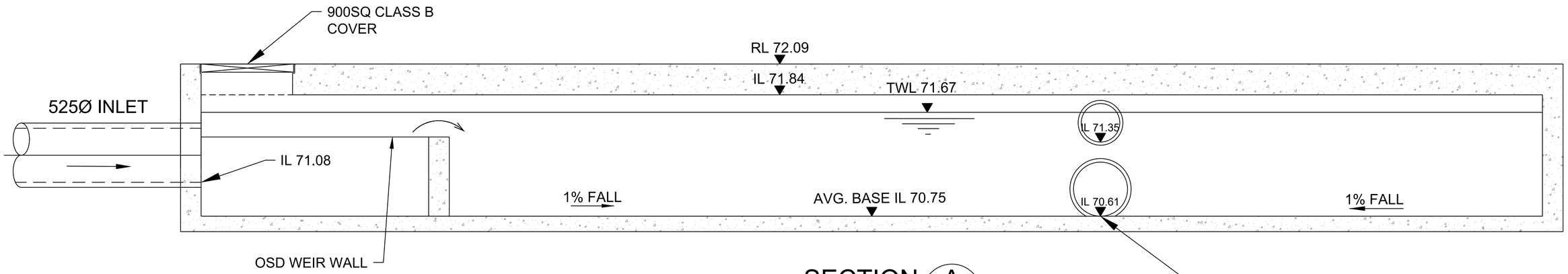

SECTION A
SCALE: 1:20
C6.04

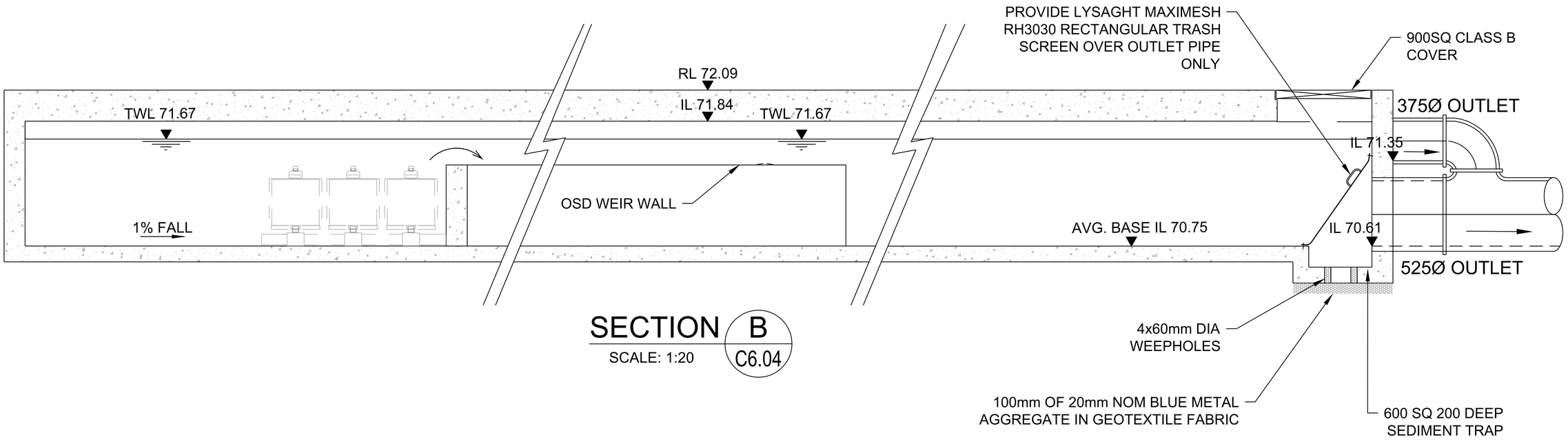

SECTION B
SCALE: 1:20
C6.04

PRELIMINARY - NOT FOR CONSTRUCTION

DO NOT SCALE FROM DRAWINGS, CHECK & VERIFY ALL DIMENSIONS & LEVELS BEFORE COMMENCEMENT OF ANY WORK.

THIS DRAWING IS NOT TO BE COPIED IN PART OR WHOLE WITHOUT WRITTEN PERMISSION FROM WARREN SMITH AND PARTNERS.

200 0 200 400 600 800 1000mm
PLAN SCALE 1:20 A1 SHEET

REVISION	AMENDMENT	DATE	REVISION	AMENDMENT	DATE
1	DEVELOPMENT APPLICATION	25/05/18			
2	DEVELOPMENT APPLICATION	19/07/18			

CLIENT
SYDNEY CATHOLIC SCHOOLS

PROJECT
ST ANTHONY OF PADUA CATHOLIC SCHOOL

PREPARED BY

Warren Smith & Partners

Warren Smith & Partners Pty Ltd
1st Floor, 123 Clarence Street, Sydney 2000 NSW Australia
T 02 9299 1312 **F** 02 9290 1295 wsp@warrensmith.com.au
www.warrensmith.com.au **ABN** 36 300 430 126

CONSULTING ENGINEERS
■ Hydraulic Services ■ Fire Protection ■ Civil Engineering
■ Sydney Water Accredited Water Servicing Co-ordinator
- Design Project Management - Building Plan Approvals

SERVING THE CONSTRUCTION INDUSTRY SINCE 1981.

Lic No: QAC/R61/0771

TITLE
OSD TANK 1 SECTIONS

SCALE	DRAWN	DESIGNED	CHECKED	APPROVED
AS SHOWN	M.CZ.	N.M.	L.Sh.	M.C.

JOB No.	DRAWING No.	ISSUE
5914000	C6.05	2

DATE	STATUS
MARCH 2018	DEVELOPMENT APPLICATION

0 10 20 30 40 50 60 70 80 90 100 110 120 130 140 150
SHEET SIZE: A1

Cad File: T:\5914000\Drawings\AutoCAD\Civil\Design\Civil 2\2DA\C6.04 OSD Tank Plan & Sections.dwg
Logo Name: JMelo
Xrefs: X-5914000-TB, X1H
Plot Date: 20/07/2018@16:21

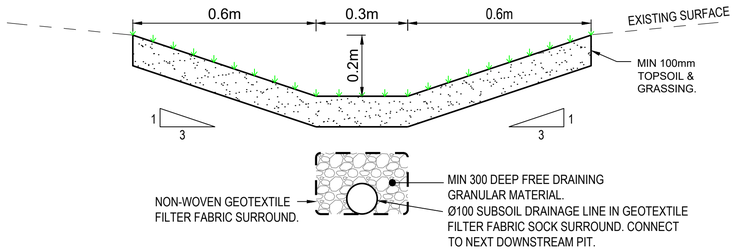

SWALE DETAIL - SWALE TYPE 1

SCALE 1:10

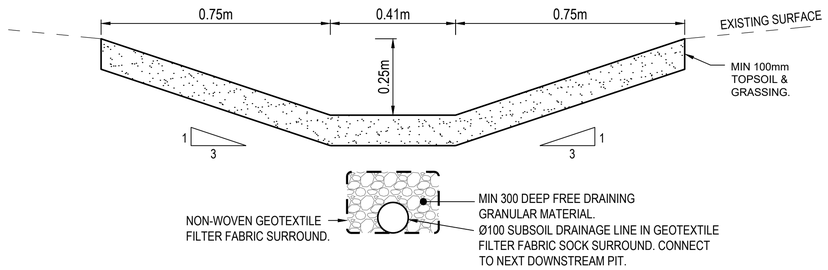

SWALE DETAIL - SWALE TYPE 2

SCALE 1:10

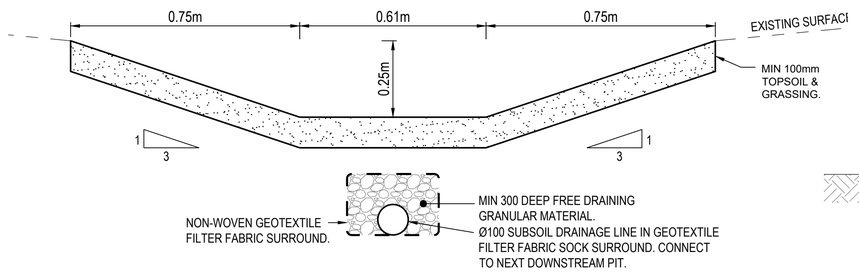

SWALE DETAIL - SWALE TYPE 3

SCALE 1:10

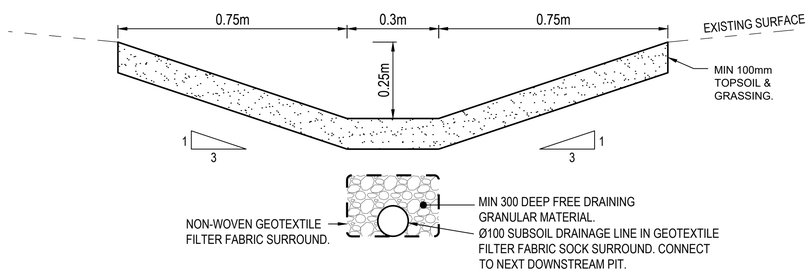

SWALE DETAIL - SWALE TYPE 4

SCALE 1:10

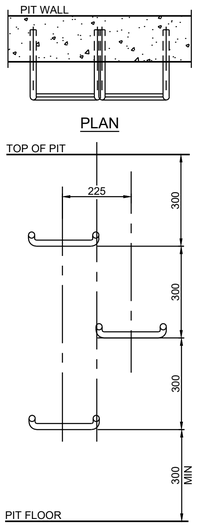

STEP IRON PLACEMENT TO PIT WALL

SCALE NTS

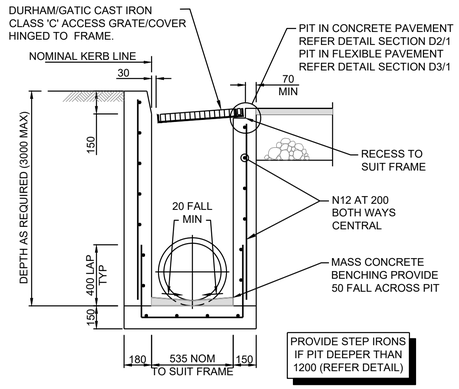

DETAIL

D1/1 -

SCALE 1:20

NOTES:

1. TRENCH WIDTH MAY NEED TO BE INCREASED SUBJECT TO ACHIEVING ADEQUATE COMPACTION.
2. MINIMUM PIPE COVER NOT UNDER ROADS = 450mm UNO.
3. THE CONTRACTOR SHALL ENSURE THAT THE SHORING OF TRENCHES IS INSTALLED AS REQUIRED BY STATUTORY REQUIREMENTS.
4. ENSURE BACKFILLING COMPACTION MEETS THE RELEVANT STANDARDS;

A) TRENCHES UNDER PAVED AREAS & BUILDINGS - 100% SMDD.
B) TRENCHES NOT UNDER PAVEMENTS - 95% SMDD.

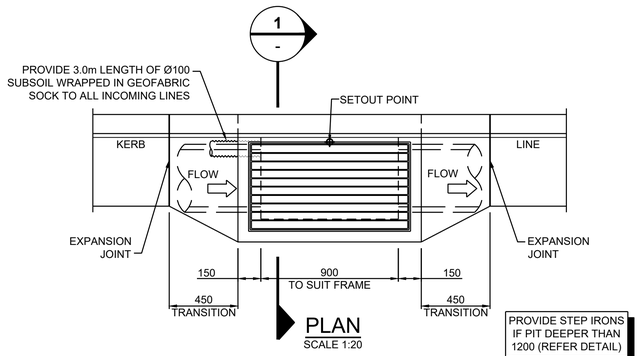

GRATED GULLY PIT

(PIPE SIZES ≤ Ø375)

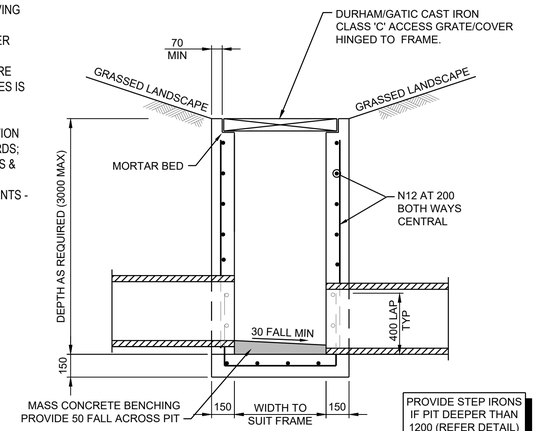

DETAIL

D1/2 -

SCALE 1:20

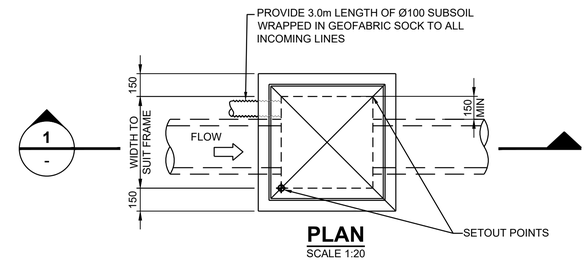

PLAN

SCALE 1:20

600 - 900SQ SURFACE INLET PITS

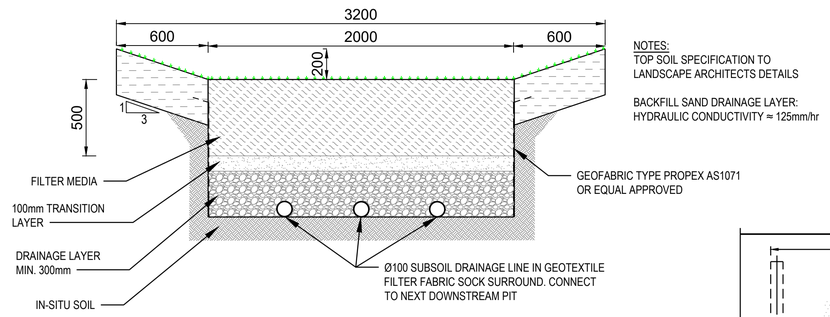

NOTES:
TOP SOIL SPECIFICATION TO LANDSCAPE ARCHITECTS DETAILS

BACKFILL SAND DRAINAGE LAYER:
HYDRAULIC CONDUCTIVITY ≈ 125mm/hr

BIORETENTION SWALE DETAIL

SCALE 1:20

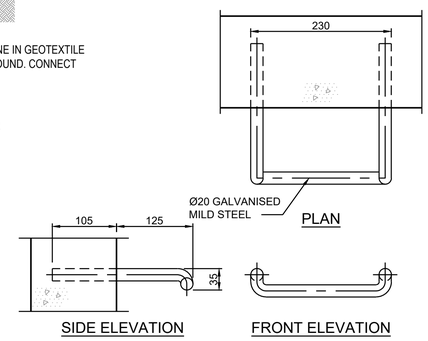

STEP IRON DETAIL

SCALE 1:5

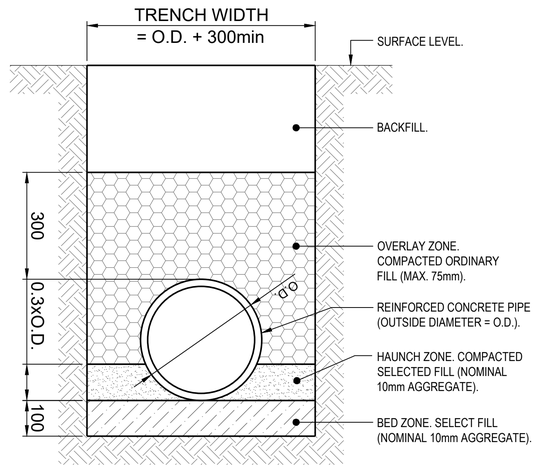

GENERAL AREAS

TYPICAL PIPE TRENCH

NOT TO SCALE

PRELIMINARY - NOT FOR CONSTRUCTION

DO NOT SCALE FROM DRAWINGS, CHECK & VERIFY ALL DIMENSIONS & LEVELS BEFORE COMMENCEMENT OF ANY WORK.

THIS DRAWING IS NOT TO BE COPIED IN PART OR WHOLE WITHOUT WRITTEN PERMISSION FROM WARREN SMITH AND PARTNERS.

REVISION	AMENDMENT	DATE	REVISION	AMENDMENT	DATE
1	DEVELOPMENT APPLICATION	25/05/18			
2	DEVELOPMENT APPLICATION	19/07/18			

CLIENT
SYDNEY CATHOLIC SCHOOLS

PROJECT
ST ANTHONY OF PADUA CATHOLIC SCHOOL

PREPARED BY
Warren Smith & Partners
Warren Smith & Partners Pty Ltd
1st Floor, 123 Clarence Street, Sydney 2000 NSW Australia
T 02 9299 1312 F 02 9290 1295 wsp@warrensmith.com.au
www.warrensmith.com.au ABN 36 300 430 126
CONSULTING ENGINEERS
Hydraulic Services Fire Protection Civil Engineering
Sydney Water Accredited Water Servicing Co-ordinator
- Design Project Management - Building Plan Approvals
SERVING THE CONSTRUCTION INDUSTRY SINCE 1981.
Lic No: QAC/96/1077/1

TITLE
STORMWATER DRAINAGE DETAILS

SCALE	DRAWN	DESIGNED	CHECKED	APPROVED
AS SHOWN	M.CZ.	N.M.	L.Sh.	M.C.

JOB No.	DRAWING No.	ISSUE
5914000	C6.06	2

DATE	STATUS
MARCH 2018	DEVELOPMENT APPLICATION

Cad File: T:\5914000\Drawings\Auto\CAD\Civil\Design\Civil\ZD\DA\C6.06 Stormwater Drainage Details.dwg
Login Name: JMello
Xref(s): X:\5914000-TB_A1H
Plot Date: 20/07/2018@14:42:29
Xref(s): X:\5914000-TB_A1H
0 10 20 30 40 50 60 70 80 90 100 110 120 130 140 150
SHEET SIZE: A1

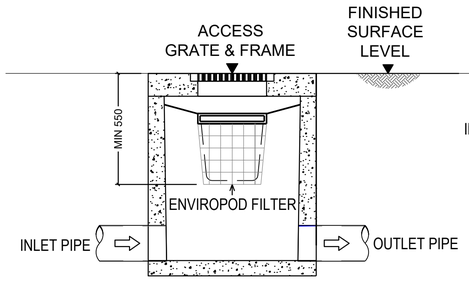

STANDARD ENVIROPOD CONFIGURATION SECTION

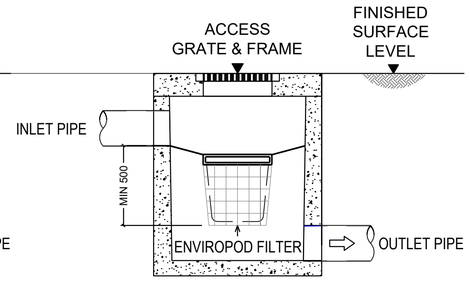

DROP PIPE ENVIROPOD CONFIGURATION SECTION

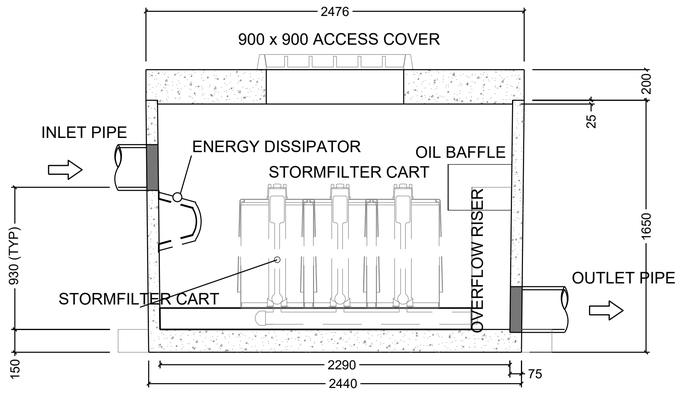

MANHOLE STORMFILTER SECTION

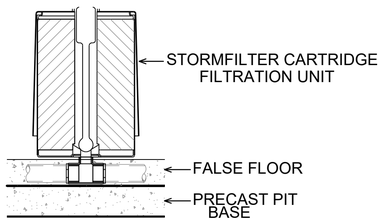

STORMFILTER CARTRIDGE DETAIL

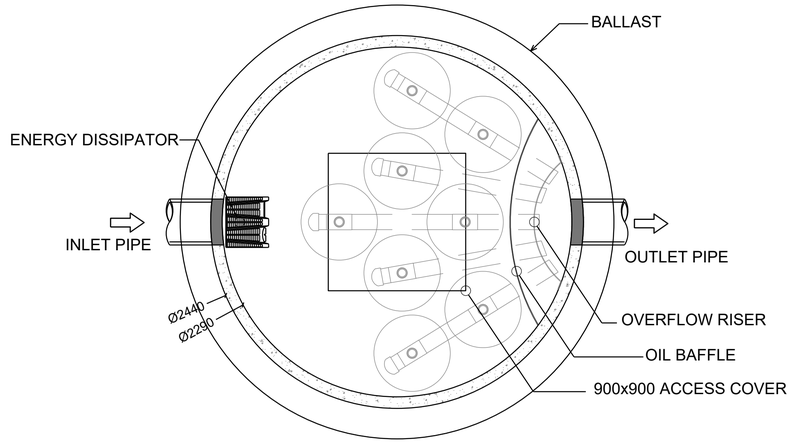

MANHOLE STORMFILTER PLAN

PRELIMINARY - NOT FOR CONSTRUCTION

DO NOT SCALE FROM DRAWINGS, CHECK & VERIFY ALL DIMENSIONS & LEVELS BEFORE COMMENCEMENT OF ANY WORK.

THIS DRAWING IS NOT TO BE COPIED IN PART OR WHOLE WITHOUT WRITTEN PERMISSION FROM WARREN SMITH AND PARTNERS.

REVISION	AMENDMENT	DATE	REVISION	AMENDMENT	DATE
1	DEVELOPMENT APPLICATION	25/05/18			
2	DEVELOPMENT APPLICATION	19/07/18			

CLIENT
SYDNEY CATHOLIC SCHOOLS

PROJECT
ST ANTHONY OF PADUA CATHOLIC SCHOOL

PREPARED BY
Warren Smith & Partners
Warren Smith & Partners Pty Ltd
1st Floor, 123 Clarence Street, Sydney 2000 NSW Australia
T 02 9299 1312 **F** 02 9290 1295 wsp@warrensmith.com.au
www.warrensmith.com.au **ABN** 36 300 430 126
CONSULTING ENGINEERS
■ Hydraulic Services ■ Fire Protection ■ Civil Engineering
■ Sydney Water Accredited Water Servicing Co-ordinator
- Design Project Management - Building Plan Approvals
SERVING THE CONSTRUCTION INDUSTRY SINCE 1981.
Lic No: QAC/R61/0771

TITLE
STORMWATER 360 TREATMENT DEVICE TYPICAL DETAILS

SCALE	DRAWN	DESIGNED	CHECKED	APPROVED
AS SHOWN	M.CZ.	N.M.	L.Sh.	M.C.

JOB No.	DRAWING No.	ISSUE
5914000	C6.07	2

DATE	STATUS
MARCH 2018	DEVELOPMENT APPLICATION

SHEET SIZE: A1

Xrefs: XJ5914000-TB, A1N
Plot Date: 2018-07-19 09:46:34 Login Name: JMello Cad File: T:\5914000\Drawings\AutoCAD\Civil\Design\Civil 2\2D\ACC6.07 Stormwater 360 Treatment Device Typical Details.dwg