APPENDIX G TARLEIGH PARK NOISE MANAGEMENT PLAN AND CURRAWARRA NOISE ASSESSMENT

Construction Noise Management Plan

TARLEIGH PARK SOLAR FARM

NOVEMBER 2017

ngh environmental

www.nghenvironmental.com.au

Document Verification

Project Title: Tarleigh Park Solar Farm

Project Number: 17-100

Project File Name: Construction Noise Management Plan _ Tarleigh Park

Revision	Date	Prepared by (name)	Reviewed by (name)	Approved by (name)
V1	10/11/17	Zeina Jokadar	Nick Graham-Higgs	Nick Graham-Higgs

NGH Environmental prints all documents on environmentally sustainable paper including paper made from bagasse (a by-product of sugar production) or recycled paper.

NGH Environmental Pty Ltd (ACN: 124 444 622. ABN: 31 124 444 622) and NGH Environmental (Heritage) Pty Ltd (ACN: 603 938 549. ABN: 62 603 938 549) are part of the NGH Environmental Group of Companies.

www.nghenvironmental.com.au

e: ngh@nghenvironmental.com.au

Bega - ACT and South East NSW
suite 1, 216 carp st (po box 470)
bega nsw 2550 (t 02 6492 8333)

Sydney Region
18/21 mary st
surry hills nsw 2010 (t 02 8202 8333)

Canberra - NSW SE & ACT
8/27 yallourn st (po box 62)
fyshwick act 2609 (t 02 6280 5053)

Brisbane
8 trawalla st
the gap qld 4061 (t 07 3511 0238)

Newcastle - Hunter and North Coast
7/11 union st
newcastle west nsw 2302 (t 02 4929 2301)

Wagga Wagga - Riverina and Western NSW
suite 1, 39 fitzmaurice st (po box 5464)
wagga wagga nsw 2650 (t 02 6971 9696)

Bathurst - Central West and Orana
35 morrisset st (po box 434)
bathurst nsw 2795 (t 02 6331 4541)

CONTENTS

1 INTRODUCTION 1

2 EXISTING ENVIRONMENT 1

2.1 AMBIENT AND BACKGROUND NOISE MONITORING 1

3 NOISE CRITERIA 2

3.1 CONSTRUCTION ACTIVITY CRITERIA 2

3.2 ROAD TRAFFIC NOISE CRITERIA 3

4 ENVIRONMENTAL IMPACTS AND ASSESSMENT 4

4.1 CONSTRUCTION NOISE SOURCES 4

4.2 CONSTRUCTION NOISE ASSESSMENT 4

4.3 ROAD TRAFFIC NOISE ASSESSMENT 6

5 PROJECT MITIGATION MEASURES 7

5.1 PHYSICAL NOISE CONTROLS 7

5.2 GENERAL MINIMISATION MEASURES 7

5.3 TIMING RESTRICTIONS 8

6 COMPLIANCE MANAGEMENT 8

6.1 MONITORING 8

6.2 COMPLAINTS RESOLUTION 9

7 CONCLUSION 9

8 REFERENCES 10

APPENDIX A PROPOSAL LOCATION ..... A-I

APPENDIX B RECEIVER LOCATIONS ..... B-II

TABLES

Table 2-1 Measured existing background (L90) & Ambient (Leq) Noise Levels, dB(A) 2

Table 3-1 Noise Management Levels at residential receivers 2

Table 3-2 Construction Noise Management Levels at Residential Recievers 3

Table 3-3 RNP Road Traffic Noise Criteria, dB(A) 3

Table 4-1 Construction equipment sound power levels 4

Table 4-2 Predicted $L_{Aeq\ 15\ min}$ construction noise levels at receiver locations 5

Table 4-3 Relative effectiveness of various forms of noise control 6

Table 4-4 Predicted Road Traffic Noise Contribution Levels Along Public Roads, dB(A) LAeq(15 Hour)..... 7

ACRONYMS AND ABBREVIATIONS

ANZECC	Australian and New Zealand Environment Conservation Council
dBA	A-weighted Decibels
EPA	Environment Protection Authority (Previously DECCW and/or OEH)
EPL	Environment Protection Licence
ICNG	Interim Construction Noise Guidelines (EPA 2009)
km	kilometres
L_{Aeq}	Equivalent continuous noise level
m	Metres
NSW	New South Wales
NVMP	Noise and Vibration Management Plan
OEH	NSW Office of Environment and Heritage
OOHW	Out-of-hours work
POEO	*Protection of the Environment Operations Act 1997*
RBL	Rating Background Level (background noise level)
RMS	Acceleration Root Mean Square

1 INTRODUCTION

The construction of a solar farm comprises activities such as road construction, civil works, excavation and foundation construction and electrical infrastructure works requiring processes such as heavy vehicle movements, loaders, excavators, piling, generators and cranes.

The Tarleigh Park and Currawarra solar farm proposal are both being proposed by the RES. Tarleigh Park is the smaller of the two solar farms and is located approximately 20 kilometres to the south of Currawarra solar farm. The nearest sensitive receivers to Tarleigh Park are located at least 985 metres from the proposed site, whilst the nearest sensitive receiver from the Currawarra solar farm proposal site is 270 metres away.

An environmental noise assessment was prepared for the Currawarra Solar Farm (TJ746-01F01 Report (2)) by Renzo Tonin (2017), given the proximity of the two solar farms and similar rural setting the Currawarra noise and vibration assessment report has been used as a guide to assess the potential noise impacts that would result from the construction of the Tarleigh Park proposal (Appendix A Proposal Location, shows the position of Tarleigh Park relative to Currawarra Solar Farm). Noise emissions from the construction phase of the project were predicted to exceed the construction noise management levels at the nearest affected receivers.

The most significant impacts from construction occur from activity at night. The proposed hours of construction activity are as follows;

- Monday to Friday: 7am to 6pm
- Saturday: 8 am to 1pm
- Sunday and Public Holidays: No work

With day time only activity occurring at significant separation distances, the construction of Tarleigh Park Solar Farm is not expected to generate significant impacts, subject to implementation of the feasible and reasonable noise mitigation measures, as set out in the noise assessment (Renzo Tonin 2017) and carried over to this construction Noise Management Plan (NMP).

This draft NMP has been prepared in advance of the detailed design, to demonstrate the framework for noise management during construction. It would be updated prior to implementation.

2 EXISTING ENVIRONMENT

2.1 AMBIENT AND BACKGROUND NOISE MONITORING

Noise monitoring for the Currawarra Solar Farm was carried out at the nearest potentially affected residential location, identified 270m southwest of the project area and described as L1-1229 Mayrung Road Lindifferon. The noise monitoring was carried out for a period of twelve days (between Monday 22nd May and Friday 2nd June 2017). Given that the nearest potential affected residential receiver to the Tarleigh Park is 985m west of the proposal site, it is considered that the Currawarra noise monitoring location is representative of the background noise that would be experienced around the Tarleigh Park solar farm.

The Rating Background Level (RBL) is the indicative background noise level at the monitoring location, while the ambient equivalent (L_{aeq}) noise level is the average noise environment at the monitoring location, determined in accordance with the NSW Industrial Noise Policy (the INP). The RBL and the ambient equivalent (L_{aeq}) noise level for L1 have been derived from the monitoring data are provided in Table 2-1.

Table 2-1 Measured existing background (L90) & Ambient (Leq) Noise Levels, dB(A)

Location	L90 Rating Background Noise Levels (RBL)			Leq Ambient Noise Levels		
	Day	**Evening**	**Night**	**Day**	**Evening**	**Night**
L1 – 1229 Mayrung Road, Lindifferon	26(30*)	17 (30*)	17 (30*)	43	29 (30*)	29 (30*)

*Based on page 24 of the INP, where background noise levels are less than 30dB(A), the minimum applicable background noise level is recommended to be set at 30dB(A). Therefore, as per Currawarra, this minimum background noise level has been adopted for all receiver locations during the daytime and night time assessment periods at Tarleigh Park.

3 NOISE CRITERIA

3.1 CONSTRUCTION ACTIVITY CRITERIA

The NSW Interim Construction Noise Guideline (ICNG; DECC 2009) deals with managing construction noise impacts. According to the guideline, a quantitative assessment of noise impacts is warranted when works are likely to impact an individual or sensitive land use for more than three weeks in total.

The guideline specifies noise targets, or 'noise management levels', for residences and other noise sensitive receivers (Table 3-1). The RBL is used when determining the management level. The RBL is the overall single-figure background noise level measured in each relevant assessment period. Residential receivers are considered 'noise affected' where construction noise levels are greater than the noise management levels identified below.

Table 3-1 Noise Management Levels at residential receivers

Time of day	Management Level
Recommended standard hours: Monday to Friday 7 am to 6 pm Saturday 8 am to 1 pm No work on Sundays or public holidays	Noise affected RBL + 10dB(A)
	Highly noise affected 75dB(A)
Outside recommended standard hours	Noise affected RBL + 5dB(A)

Table 3-2 identifies the construction Noise Management Levels (NMLs) established for the nearest noise sensitive receivers based upon the noise monitoring results presented in Table 2-1 and the proposed construction hours and ICNG (Table 3-1) requirements. Furthermore, during standard construction hours, a highly affected noise objective of 75 dB(A) applies to all receivers.

Table 3-2 Construction Noise Management Levels at Residential Recievers

Location description	Day L_{A90} Background Noise Level (RBL)	Day Noise Management $L_{A90\ (15min)}$
All residential receivers	30[1]	40
Notes: 1. Construction works occur during the daytime period only, hence only the day period assessed		

3.2 ROAD TRAFFIC NOISE CRITERIA

Noise impact from the potential increase in traffic on the surrounding roads network due to construction and operational activities is assessed against the NSW 'Road Noise Policy' (RNP).

Based on functionality, Riverina Highway is classified as an arterial road and Parfreys Road is categorised as a local road. For existing residences affected by additional traffic on existing arterial and local roads generated by land use developments, the following RNP road traffic noise criteria apply.

Table 3-3 RNP Road Traffic Noise Criteria, dB(A)

Road Category	Type of Project/Land Use	Assessment Criteria, dB(A)	
		Day 7am – 10pm	Night 10pm – 7am
Freeway/arterial/sub-arterial roads	3. Existing residences affected by additional traffic on existing freeways/arterial/sub-arterial roads generated by land use developments	LAeq,(15 hour) 60 (external)	LAeq,(9 hour) 55 (external)
Local Road	6. Existing residences affected by additional traffic on existing local roads generated by land use developments.	LAeq, (1 hour) 55 (external)	LAeq, (1 hour) 50 (external)

4 ENVIRONMENTAL IMPACTS AND ASSESSMENT

4.1 CONSTRUCTION NOISE SOURCES

Noise impact predictions take into account the typical noise levels of construction equipment likely to be used for the construction phase. The equipment and their sound power levels are in Table 4-1 .

Table 4-1 Construction equipment sound power levels

Equipment used	L_{Aeq} Sound power levels (dBA)	No. Items required
Small pile driving rig	114	10
Crane	110	2
Drum Roller	109	1
Padfoot roller	109	1
Wheeled loader	109	1
Dump truck	108	2
30t Excavator	107	4
Grader	107	2
Chain trencher	104	1
Water truck	104	2
Telehandler	98	2
Forklift	90	2
Light vehicles	88	4

4.2 CONSTRUCTION NOISE ASSESSMENT

Noise emissions for the Currawarra Solar Farm were determined by modelling the noise sources, receiver locations, topographical features of the intervening area, and possible noise control treatments surrounding the study area. The modelling calculates the contribution of each noise source at each specified receptor point and allows the prediction of the total noise from a site.

The noise prediction models take into account:

- Location of noise sources and receiver locations
- Height of sources and receivers
- Separation distances between sources and receivers
- Ground type between sources and receivers
- Attenuation from barriers (natural and purpose built).

Given that both solar farm proposal sites have similar characteristics (i.e. topography and land use), the conclusions of the Currawarra modelling have been used for the Tarleigh Park.

The modelling results for Currawarra Solar Farm revealed that two receivers were predicted to experience construction noise levels above the noise management level when up to three of the noisiest plant are operating concurrently (considered a worst case scenario). Table 4-2presents the noise levels likely to be experienced at these two affected receiver locations during the construction works.

Table 4-2 Predicted $L_{Aeq\ 15\ min}$ construction noise levels at receiver locations

Receiver location	Noise management level[1]	Predicted Construction Noise Level, $L_{Aeq\ (15\ min)}$ [2]	Comply? (Yes/No)
R1- 270metres south west of the Currawarra	40	<20-52	**No**
R6 - 860m east of the Currawarra project area.		<20-42	**No**

Notes: 1 Noise management for standard day time construction works (i.e Monday to Friday 7am to 6pm and Saturday 8am to 1pm)

2. Based on up to three nosiest construction plant and equipment operating concurrently.

The results show that depending on the location where construction occurs on the proposal site at any one time, noise levels could be less than 20 dB(A) but up to 52 dB(A) and 42dB(A) if they operate close to the proposal site boundary in proximity to the two residences. It is noted that construction noise levels at all receivers are predicted to be less than the highly noise affected level of 75dB(A). No other receivers located further than 1100 metres away would experience noise above the noise management levels.

In the case of the Tarleigh Park proposal, two residential properties are located within 1200 metres from the proposal site (the closest being 985 metres to the west). As such these may experience noise levels that marginally exceed the noise management levels by up to 2dB(A), in particular when up to three of the noisiest plant are operating concurrently closest to the properties. Appendix B Receiver Locations, shows the positions of the closest identified receivers.

Section 5 outlines possible noise reductions from using some recommended control methods.

Table 4-3 Relative effectiveness of various forms of noise control

Noise control method	Practical examples	Typical noise reduction possible in practice		Maximum noise reduction possible in practice	
		AS2436[1]	Renzo Tonin and Associates	AS2436	Renzo Tonin and Associates
Distance	Doubling of distance between source and receiver	6 dB(A)	6 dB(A)	6 dB(A)	6 dB(A)
Screening	Acoustics barriers such as earth mounds, temporary noise barriers	5 to 10 dB(A)	5 to 10 dB(A)	15 dB(A)	15 dB(A)
Acoustic enclosures	Engine casing lagged with insulation and plywood	15 to 25 dB(A)	10 to 20 dB(A)	50 dB(A)	30 dB(A)
Engine Silencing	Residential class mufflers	5 to 10 dB(A)	5 to 10 dB(A)	20 dB(A)	20 dB(A)
Substitution by alternative process	Use electric motors in preference to diesel or petrol	-	15 to 25 dB(A)	-	40 dB(A)

Consideration of these methods is recommended in Section 5.

4.3 ROAD TRAFFIC NOISE ASSESSMENT

The Tarleigh Park proposal provides for road works to upgrade the intersection of the Riverina Highway with Parfreys Road, which is approximately 720m to the closest residence. The scope of works provides for the addition of one or two short sections of lanes as per BAL or BAR intersection standards and consequently is likely to be of short duration. Furthermore, given that there are no residential receivers within close proximity of the intersections and the minor nature of the works, construction noise from the intersection upgrades are considered insignificant, and no specific mitigation is provided.

Additionally, the results of the road traffic noise predictions for Currawarra have been used to assess general construction vehicle movements on associated roads. It is noted that the predicted noise levels represent the traffic noise contribution from the vehicle movements associated with the construction works and does not take into account existing traffic noise levels due to existing general traffic flows. The assessment is applicable to Tarleigh Park, as the residences along Parfreys Road are located further than 200m from a local road compared to Currawarra.

[1] Refers to Australian Standard (AS)2436.

Table 4-4 Predicted Road Traffic Noise Contribution Levels Along Public Roads, dB(A) $L_{Aeq(15\ Hour)}$

Receiver	Criteria	Speed (km/h)[1]	Distance to Road[2]	Predicted Noise Level	Exceed?
Residences on Arterial/Subarterial roads	L_{Aeq}, (15 hour) 60	100	25m	52	No
Residences on Local Roads	LAeq, (1 hour) 55[3]	80	200m	39	No

Notes: 1. Based on posted speed limit

2. Based on closest distance from facade of dwelling to the road

3. Criteria for local roads is based on a 1 hour period, therefore predicted level is based on full day counts averaged over a one hour period (between 7am and 6pm).

From the above table, it can be seen that road traffic noise level contributions from the vehicle movements associated with the construction works for Currawarra, and therefore Tarleigh Park, are at least 8dB(A) below the applicable noise criterion based on dwellings being 25m from the road. Given that residences are located within a rural environment, distances between the road and the dwellings would likely be significantly greater than 25m. Furthermore, with the closest residential dwelling to a local road (Parfreys Road) found to be greater than 200 metres the vehicle movements due to construction works for the Tarleigh Park proposal would be more than 16dB(A) below the applicable noise criterion for local roads.

Therefore, traffic noise levels as a result of the construction works for the Tarleigh Park solar farm would not adversely contribute to the existing traffic noise levels at the most affected residences along the surrounding roads. No specific mitigation is provided.

5 PROJECT MITIGATION MEASURES

The following recommendations provide feasible and reasonable noise control solutions to reduce noise impacts to sensitive receivers. Where actual construction activities differ from those provided in this report, more detailed design of noise control measures may be required.

5.1 PHYSICAL NOISE CONTROLS

Physical noise controls set out in Table 4-3 would be investigated where exceedances are predicted for specific activities:

- Doubling of distance between source and receiver
- Temporary acoustics barriers
- Engine casing lagged with insulation and plywood

5.2 GENERAL MINIMISATION MEASURES

In addition to physical noise controls, the following general noise management measures should be followed:

- Use less noisy plant and equipment, where feasible and reasonable.
- Plant and equipment should be properly maintained.
- Provide special attention to the use and maintenance of ‘noise control’ or ‘silencing’ kits fitted to machines to ensure they perform as intended.

- Strategically position plant on site to reduce the emission of noise to the surrounding neighbourhood and to site personnel.
- Avoid any unnecessary noise when carrying out manual operations and when operating plant.
- Any equipment not in use for extended periods during construction work should be switched off.

5.3 TIMING RESTRICTIONS

Where noise level exceedances cannot be avoided, then consideration may be given to implementing time restrictions and/or providing periods of repose for residents, where feasible and reasonable. That is, daily periods of respite from noisy activities may also be scheduled for building occupants during construction hours.

Some items of plant may exceed noise limits even after noise treatment is applied. To reduce the overall noise impact, the use of noisy plant may be restricted to within certain time periods, where feasible and reasonable and to be negotiated with Council and the residents. Allowing the construction activities to proceed, despite the noise exceedance may be the preferred method in order to complete the works expeditiously.

6 COMPLIANCE MANAGEMENT

6.1 MONITORING

The aim of a monitoring procedure is to ensure works are being carried out in accordance with the NMP. On site monitoring should include the following elements;

Plant and Equipment

Regular on site inspections to identify:

- Equipment has quality OEM mufflers installed;
- Equipment is well maintained and fitted with adequately maintained silencers which meet the OEM design specifications;
- Silencers and enclosures are intact and closed, rotating parts are balanced, loose bolts are tightened, frictional noise is reduced through lubrication and cutting noise reduced by keeping equipment sharp;
- Site personnel are using only necessary power to complete the task;
- Plant and equipment that is noisier than other similar machines;
- Care is being taken to place material in trucks rather than being dropped;
- Plant emitting noise strongly in one direction is orientated so that the noise is directed away from noise sensitive areas if practicable;
- Machines that are used intermittently are being shut down in the intervening periods between works or throttled down to a minimum.

6.2 COMPLAINTS RESOLUTION

The aim of the complaints resolution process is to identify any feasible and reasonable measures that may further reduce impacts following a complaint, and to provide feedback to the community on the above process within a reasonable timeframe.

The proponent would:

- Take direct actions to develop good relations with people living and working in the vicinity of a construction site at the beginning of a project and this would be maintained throughout the project, as this is of paramount importance.
- Keep people living and working in the vicinity of a construction site informed of progress.
- Appoint a person to liaise with the community who is adequately trained and experienced in such matters

The complaints resolution process should implement the following noise elements;

- Establishment of a complaints mechanism for the community via either telephone or email;
- Notification of the relevant project contact details through the community consultation process;
- Take all complaints seriously and deal with them expeditiously;
- Assesses whether the issue can be resolved easily and take immediate action if possible;
- If not, ensure that the appropriate consultation has been undertaken for the activity;
- Ensures the on-site inspections of the NMP have been carried out regularly for the activity;
- Assess the construction site and activities to determine whether there is any reason to believe the noise exposure of receivers is higher than anticipated;
- Undertakes monitoring of noise levels where this cannot be confirmed, with the aim of establishing if the exposure of receivers is higher than anticipated by the NMP;
- Takes remedial action if any of the above cannot be confirmed;
- Advises complainant of action taken;
- Maintains a record of the above to enable review by an independent authority such as EPA.

7 CONCLUSION

Renzo Tonin and Associates has completed an environmental noise and vibration assessment of the proposed Currawarrra Solar Farm. This has been used as a guide to assess the potential noise impacts from the construction of the Tarleigh Parl Solar Farm. Noise emissions from the construction phase of the project were predicted to exceed the construction noise management levels at the nearest affected receivers.

Feasible and reasonable noise control solutions to reduce noise impacts to sensitive receivers are included in this NMP.

The NMP provides a framework document that the construction contractor can use to develop and implement action plans for each individual construction activities. It has been prepared in advance of the detailed design, to demonstrate the framework for noise management during construction and would be updated prior to implementation.

8 REFERENCES

DECCW. 2011. NSW Road Noise Policy. Department of Environment, Climate Change and Water, Sydney, New South Wales.

DECCW. 2009. Interim Construction Noise Guideline. Department of Environment, Climate Change and Water, Sydney, New South Wales.

Renzo Tonin and Associates. 2017. Currawarra Solar Farm, Construction & Operational Noise & Vibration Assessment. Report prepared for NGH Environmental, October 2017.

APPENDIX A PROPOSAL LOCATION

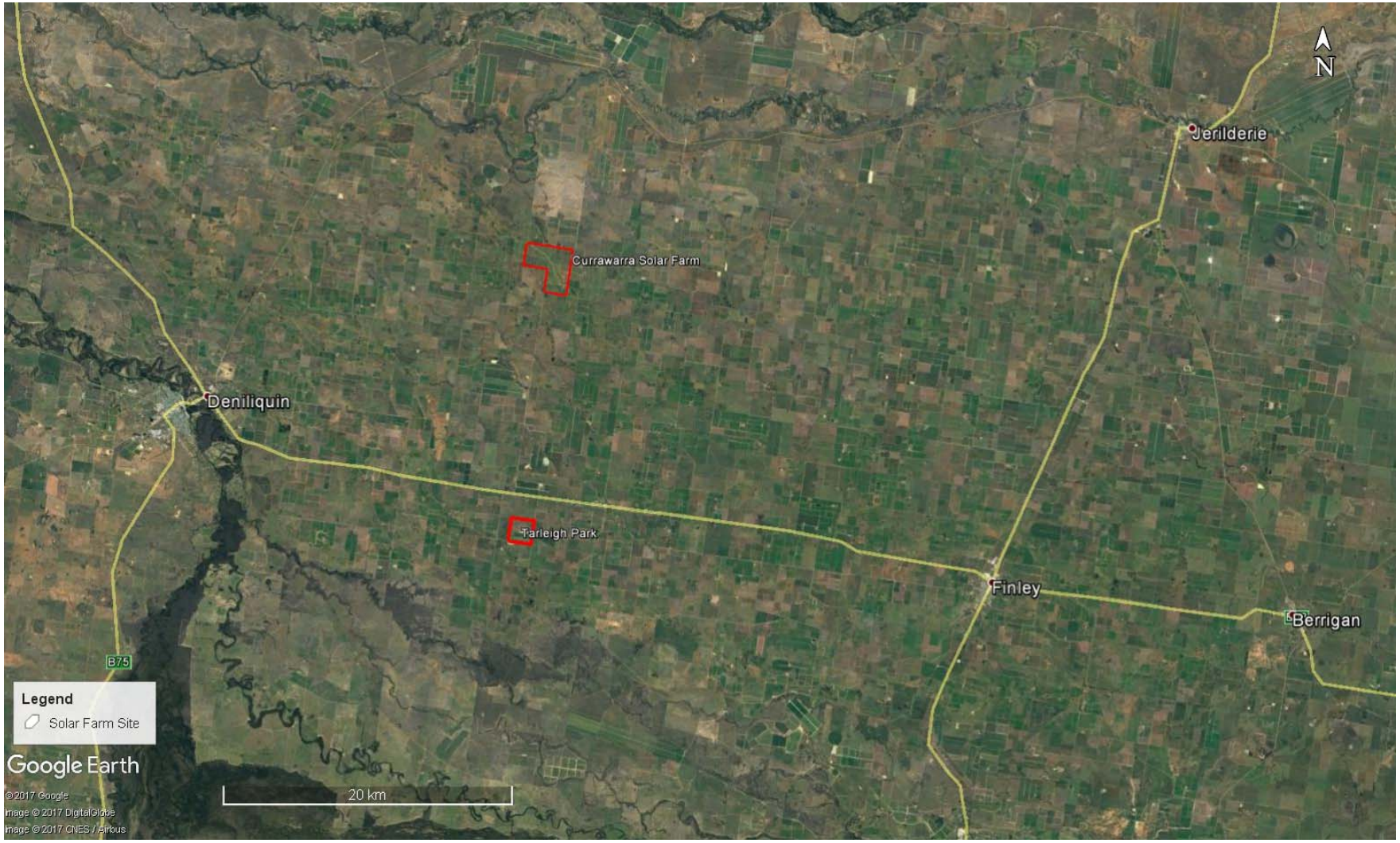

APPENDIX B RECEIVER LOCATIONS

Acoustics
Vibration
Structural Dynamics

CURRAWARRA SOLAR FARM

Construction & Operational Noise & Vibration Assessment

4 October 2017

NGH Environmental

TJ746-01F01 Report (r2)

Sydney Melbourne Brisbane Gold Coast Kuwait
Renzo Tonin & Associates (NSW) Pty Ltd ABN 29 117 462 861
Level 1/418A Elizabeth St SURRY HILLS NSW 2010 | PO Box 877 STRAWBERRY HILLS NSW 2012
P (02) 8218 0500 F (02) 8218 0501 sydney@renzotonin.com.au www.renzotonin.com.au

Document Details

Detail	Reference
Doc reference:	TJ746-01F01 Report (r2)
Prepared for:	NGH Environmental
Address:	Unit 18, 21 Mary Street Surry Hills NSW 2010
Attention:	Mr Raphael Morgan

Document Control

Date	Revision history	Non-issued revision	Issued revision	Prepared	Instructed	Authorised
31.08.2017	Generate report	0	1	DK	MCH	MCH
04.10.2017	Finalise report	-	2	DK	MCH	MCH

Important Disclaimer:

The work presented in this document was carried out in accordance with the Renzo Tonin & Associates Quality Assurance System, which is based on Australian Standard / NZS ISO 9001.

This document is issued subject to review and authorisation by the Team Leader noted by the initials printed in the last column above. If no initials appear, this document shall be considered as preliminary or draft only and no reliance shall be placed upon it other than for information to be verified later.

This document is prepared for the particular requirements of our Client referred to above in the 'Document details' which are based on a specific brief with limitations as agreed to with the Client. It is not intended for and should not be relied upon by a third party and no responsibility is undertaken to any third party without prior consent provided by Renzo Tonin & Associates. The information herein should not be reproduced, presented or reviewed except in full. Prior to passing on to a third party, the Client is to fully inform the third party of the specific brief and limitations associated with the commission.

In preparing this report, we have relied upon, and presumed accurate, any information (or confirmation of the absence thereof) provided by the Client and/or from other sources. Except as otherwise stated in the report, we have not attempted to verify the accuracy or completeness of any such information. If the information is subsequently determined to be false, inaccurate or incomplete then it is possible that our observations and conclusions as expressed in this report may change.

We have derived data in this report from information sourced from the Client (if any) and/or available in the public domain at the time or times outlined in this report. The passage of time, manifestation of latent conditions or impacts of future events may require further examination and re-evaluation of the data, findings, observations and conclusions expressed in this report.

We have prepared this report in accordance with the usual care and thoroughness of the consulting profession, for the sole purpose described above and by reference to applicable standards, guidelines, procedures and practices at the date of issue of this report. For the reasons outlined above, however, no other warranty or guarantee, whether expressed or implied, is made as to the data, observations and findings expressed in this report, to the extent permitted by law.

The information contained herein is for the purpose of acoustics only. No claims are made and no liability is accepted in respect of design and construction issues falling outside of the specialist field of acoustics engineering including and not limited to structural integrity, fire rating, architectural buildability and fit-for-purpose, waterproofing and the like. Supplementary professional advice should be sought in respect of these issues.

Contents

1 Introduction 5

2 Project Description 6

2.1 Background Information 6

2.2 Regulatory Requirements 6

2.3 Receiver Locations 6

2.4 Hours of Operation 7

2.4.1 Construction 7

2.4.2 Operation 7

3 Existing Noise Environment 9

3.1 Noise Monitoring Locations 9

3.2 Existing Background & Ambient Noise Levels 9

4 Construction Noise Assessment 11

4.1 Construction Noise Management Levels 11

4.2 Construction Noise Sources 12

4.3 Construction Noise Assessment 14

4.4 Construction Noise Mitigation and Management Measures 16

4.4.1 General Engineering Noise Controls 16

4.4.2 Noise Management Measures 17

5 Operational Noise Assessment 19

5.1 Operational Noise Criteria 19

5.1.1 Intrusiveness Criteria 19

5.1.2 Amenity Criteria 19

5.1.3 Sleep Disturbance 20

5.2 Operational Noise Sources 21

5.3 'Modifying Factor' Adjustments 22

5.4 Operational Noise Assessment 23

5.5 Sleep Disturbance Assessment 24

6 Vibration Assessment 25

6.1 Vibration Criteria 25

6.2 Potential Vibration Impacts 27

7 Road Traffic Noise Assessment 28

7.1 Road Traffic Noise Criteria 28

7.2 Predicted Road Traffic Noise 29

8 Conclusion 30

APPENDIX A Glossary of Terminology 31

APPENDIX B Long-Term Noise Monitoring Methodology 33

B.1 Noise Monitoring Equipment 33
B.2 Meteorology During Monitoring 33
B.3 Noise vs Time Graphs 33
APPENDIX C Site Overview 34
APPENDIX D Long Term Noise Monitoring Results 36

List of Tables

Table 3.1 – Measured Existing Background (L_{90}) & Ambient (L_{eq}) Noise Levels, dB(A) 10
Table 4.1 – Noise Management Levels at Residential Receivers 12
Table 4.2 – Construction Noise Management Levels at Residential Receivers 12
Table 4.3 – Typical Construction Equipment & Sound Power Levels 13
Table 4.4 – Predicted $L_{Aeq,15min}$ Construction Noise Levels at Receiver Locations, dB(A) 15
Table 4.5 – Relative Effectiveness of Various Forms of Noise Control, dB(A) 16
Table 4.6 – Noise Control Measures for Likely Construction Plant 17
Table 5.1 – Intrusiveness Noise Criteria, dB(A) 19
Table 5.2 – Applicable Amenity Noise Criteria, dB(A) 20
Table 5.3 – Sleep Disturbance Criterion, dB(A) 21
Table 5.4 – Typical Operational Plant and Equipment & Sound Power Levels 22
Table 5.5 – Predicted $L_{Aeq,15min}$ Operational Noise Levels at Receiver Locations, dB(A) 23
Table 6.1 – Types of Vibration 25
Table 6.2 – Preferred and Maximum Levels for Human Comfort 26
Table 6.3 – Acceptable Vibration Dose Values for Intermittent Vibration ($m/s^{1.75}$) 26
Table 6.4 – Potential Vibration Impacts for Identified Receivers 27
Table 7.1 – Summary of the Estimated Construction Traffic Volumes During Peak Construction 28
Table 7.2 – RNP Road Traffic Noise Criteria, dB(A) 28
Table 7.3 – Predicted Road Traffic Noise Contribution Levels Along Public Roads, dB(A) $L_{Aeq(15\ Hour)}$ 29

List of Figures

Figure 1 – Site, Surrounds and Receiver and Noise Monitoring Locations 8
Figure 2 – Orthogonal Axes for Human Exposure to Vibration 26

1 Introduction

Renzo Tonin & Associates was engaged to conduct an environmental noise and vibration impact assessment for the proposed Currawarra Solar Farm as part of the Environmental Impact Statement (EIS) for the project. The Currawarra Solar Farm site is located approximately 25 kilometres north-east of Deniliquin and 15 kilometres south of Conargo, New South Wales. Noise and vibration impacts from the construction and operation phases of the project will be addressed in this report in accordance with the relevant Secretary's Environmental Assessment Requirements (SEARS) and EPA requirements and guidelines.

The work documented in this report was carried out in accordance with the Renzo Tonin & Associates Quality Assurance System, which is based on Australian Standard / NZS ISO 9001. Appendix A contains a glossary of acoustic terms used in this report.

2 Project Description

2.1 Background Information

The Currawarra Solar Farm project includes the construction and operation of a solar photovoltaic (PV) plant and associated infrastructure, with a capacity of approximately 195MW. The subject site is located approximately 25 kilometres east of Deniliquin and 15 kilometres south of Conargo, New South Wales, within the Edward River Council Local Government Area (LGA).

2.2 Regulatory Requirements

Noise and vibration impacts are assessed in accordance with a number of policies, guidelines and standards, including:

- NSW 'Interim Construction Noise Guideline' (ICNG – Department of the Environment and Climate Change, 2009);
- NSW 'Industrial Noise Policy' (INP – EPA, 2000);
- 'Assessing Vibration: A Technical Guideline' (Department of the Environment and Climate Change, 2006); and
- NSW 'Road Noise Policy' (RNP – Department of Environment, Climate Change and Water, 2011)

2.3 Receiver Locations

The nearest affected receivers were identified through aerial maps as follows:

- **Receiver R1 – 1229 Mayrung Road, Lindifferon**
  Residential property located approximately 270m south-west of the project area.
- **Receiver R2 – 1085 Mayrung Road, Lindifferon**
  Residential property located approximately 1,240m west of the project area.
- **Receiver R3 – 1430 Lindifferon Lane, Lindifferon**
  Residential property located approximately 1,800m west of the project area.
- **Receiver R4 – Drivers Road, Lindefferon**
  Residential property located approximately 1,800m west of the project area.
- **Receiver R5 – 490 Drivers Road, Lindifferon**
  Residential property located approximately 1,200m north of the project area.
- **Receiver R6 – 166 Sunny Pines Road, Mayrung**
  Residential property located approximately 860m east of the project area.

- **Receiver R7 – 1591 Mayrung Road, Mayrung**
  Residential property located approximately 1,600m east of the project area.
- **Receiver R8 – 1342 Mayrung Road, Mayrung**
  Residential property located approximately 1,100m south of the project area.

Figure 1 provides details of the site, surrounds and receiver locations

2.4 Hours of Operation

2.4.1 Construction

Construction will occur for an approximate duration of 18 months during the following standard hours of construction:

- Monday to Friday: 7:00am to 6:00pm
- Saturday: 8:00am to 1:00pm
- No work on Sundays or public holidays

2.4.2 Operation

There will be staff on site during the following standard hours:

- Monday to Friday: 7:00am to 6:00pm
- Saturday: 8:00am to 1:00pm

Figure 1 – Site, Surrounds and Receiver and Noise Monitoring Locations

3 Existing Noise Environment

Background noise varies over the course of any 24 hour period, typically from a minimum at 3am in the morning to a maximum during morning and afternoon traffic peak hours. Therefore, the NSW 'Industrial Noise Policy' (INP – Environment Protection Authority NSW 2000) requires that the level of background and ambient noise be assessed separately for the daytime, evening and night-time periods. The NSW INP defines these periods as follows:

- **Day** is defined as 7:00am to 6:00pm, Monday to Saturday and 8:00am to 6:00pm Sundays & Public Holidays.
- **Evening** is defined as 6:00pm to 10:00pm, Monday to Sunday & Public Holidays.
- **Night** is defined as 10:00pm to 7:00am, Monday to Saturday and 10:00pm to 8:00am Sundays & Public Holidays.

3.1 Noise Monitoring Locations

Noise monitoring is to be undertaken at the nearest or potentially most affected residential locations. In this case the nearest and potentially most affected location where noise monitoring was undertaken was as follows.

- **Location L1 – 1229 Mayrung Road, Lindifferon**
  Noise monitor was installed in the 'free field' (ie. away from building facades). Noise data represents the background and ambient noise environment for residences surrounding the project area.

To quantify the existing ambient noise environment, long-term (unattended) noise monitoring was conducted at Location L1 between Monday 22nd May and Friday 2nd June 2017.

Appendix A of this report presents a description of noise terms. Appendix B details the noise monitoring methodology and the graphical recorded outputs from long term noise monitoring are included in Appendix D. The graphs in Appendix D were analysed to determine an assessment background level (ABL) for each day, evening and night period in each 24 hour period of noise monitoring, and based on the median of individual ABLs an overall single Rating Background Level (RBL) for the day, evening and night period is determined over the entire monitoring period in accordance with the NSW INP.

3.2 Existing Background & Ambient Noise Levels

Existing background and ambient noise levels are presented in Table 3.1 below. The noise monitor was positioned outdoors in the 'free-field' (ie. away from building facades). Construction and operation noise from the site should be assessed away from the facade at the potentially most affected residential boundaries and therefore, the representative noise levels listed in Table 3.1 are directly applicable.

Table 3.1 – Measured Existing Background (L_{90}) & Ambient (L_{eq}) Noise Levels, dB(A)

Location	L_{90} Background Noise Levels			L_{eq} Ambient Noise Levels		
	Day	Evening	Night	Day	Evening	Night
L1 – 1229 Mayrung Road, Lindifferon	26	17	17	43	29	29

The identified receivers surrounding the subject site are all classified as rural under INP guidelines. It was found that the background noise levels are representative of residences in a rural environment with daytime and night time background noise levels below 30dB(A).

Based on page 24 of the INP, where background noise levels are less than 30dB(A), the minimum applicable background noise level is recommended to be set at **30dB(A)**. Therefore, this minimum background noise level has been adopted for all receiver locations nominated in Section 2.3 during the daytime, evening and night time assessment periods.

4 Construction Noise Assessment

4.1 Construction Noise Management Levels

The NSW 'Interim Construction Noise Guideline' (ICNG, 2009) provides guidelines for assessing noise generated during the construction phase of developments.

The key components of the guideline that are incorporated into this assessment include:

- *Use of L_{Aeq} as the descriptor for measuring and assessing construction noise*

  NSW noise policies, including the INP, RNP and RING have moved to the primary use of L_{Aeq} over any other descriptor. As an energy average, L_{Aeq} provides ease of use when measuring or calculating noise levels since a full statistical analysis is not required as when using, for example, the L_{A10} descriptor.

- *Application of reasonable and feasible noise mitigation measures*

  As stated in the ICNG, a noise mitigation measure is feasible if it is capable of being put into practice, and is practical to build given the project constraints.

  Selecting reasonable mitigation measures from those that are feasible involves making a judgement to determine whether the overall noise benefit outweighs the overall social, economic and environmental effects.

The ICNG provides two methods for assessment of construction noise, being either a quantitative or a qualitative assessment. A quantitative assessment is recommended for major construction projects of significant duration, and involves the measurement and prediction of noise levels, and assessment against set criteria. A qualitative assessment is recommended for small projects with duration of less than three weeks and focuses on minimising noise disturbance through the implementation of reasonable and feasible work practices, and community notification.

Given the length of the construction works proposed, a quantitative assessment is carried out herein, consistent with the ICNG requirements.

Table 4.1 reproduced from the ICNG, sets out the noise management levels and how they are to be applied for residential receivers.

Table 4.1 – Noise Management Levels at Residential Receivers

Time of Day	Management Level $L_{Aeq\ (15\ min)}$	How to Apply
Recommended standard hours: Monday to Friday 7 am to 6 pm Saturday 8 am to 1 pm No work on Sundays or public holidays	Noise affected RBL + 10dB(A)	The noise affected level represents the point above which there may be some community reaction to noise. Where the predicted or measured $L_{Aeq\ (15\ min)}$ is greater than the noise affected level, the proponent should apply all feasible and reasonable work practices to meet the noise affected level. The proponent should also inform all potentially impacted residents of the nature of works to be carried out, the expected noise levels and duration, as well as contact details.
	Highly noise affected 75dB(A)	The highly noise affected level represents the point above which there may be strong community reaction to noise. Where noise is above this level, the relevant authority (consent, determining or regulatory) may require respite periods by restricting the hours that the very noisy activities can occur, taking into account: • times identified by the community when they are less sensitive to noise (such as before and after school for works near schools, or mid-morning or mid-afternoon for works near residences) • if the community is prepared to accept a longer period of construction in exchange for restrictions on construction times.
Outside recommended standard hours	Noise affected RBL + 5dB(A)	A strong justification would typically be required for works outside the recommended standard hours. The proponent should apply all feasible and reasonable work practices to meet the noise affected level. Where all feasible and reasonable practices have been applied and noise is more than 5dB(A) above the noise affected level, the proponent should negotiate with the community. For guidance on negotiating agreements see section 7.2.2 of the ICNG.

Table 4.2 presents the construction noise management levels established for the nearest noise sensitive residential receivers based upon the noise monitoring results presented in Table 3.1, the proposed construction hours and the above ICNG requirements. The receiver locations are marked in Figure 1.

Table 4.2 – Construction Noise Management Levels at Residential Receivers

Location Description	Day L_{A90} Background Noise Level (RBL)	Day Noise Management Level $L_{Aeq(15min)}$
All residential receivers	30[1]	**40**

Notes: 1. Construction works occur during the daytime period only, hence only the day period assessed

4.2 Construction Noise Sources

The proposed construction activities include the following:

- Site establishment;
- Installation of steel post and rail foundations for solar panels;
- Installation of underground cabling and cable crossings;

- Construction of control room, switch room and storage building;
- Construction of substation and connections; and
- Construction of the Energy Storage Facility.

The following table lists typical plant and equipment likely to be used by the contractor to carry out the necessary construction works for the project.

Table 4.3 – Typical Construction Equipment & Sound Power Levels

Plant Item	Plant Description	Number of Items	L_{Aeq} Sound Power Levels, dB(A) re. 1pW (single item)
1	Small pile driving rig[1]	10	114
2	Crane	2	110
3	Drum roller	1	109
4	Padfoot roller	1	109
5	Wheeled loader	1	109
6	Dump truck	2	108
7	30t Excavator	4	107
8	Grader	2	107
9	Chain trencher	1	104
10	Water truck	2	104
11	Telehandler	2	98
12	Forklift	2	90
13	Light vehicles	4	88

Notes: 1. Pile driving rigs used for the installation of solar array posts. Rigs are assumed to be spread over the proposed site during construction.

The sound power levels for the majority of activities presented in the above table are provided either by the client, based on maximum levels given in Table A1 of Australian Standard 2436 - 2010 'Guide to Noise Control on Construction, Demolition and Maintenance Sites', the ICNG, information from past projects and/or information held in our library files.

Additionally, road works are proposed to upgrade intersections along the haulage route at the following intersections:

- Riverina Hwy/Lakers Road – approximately 200m to the closest residence;
- Lakers Rd/Mooney Swamp Road – approximately 700m to the closest residence;
- Mooney Swamp Road/Mayrung Road – approximately 1,000m to the closest residence;
- Mayrung Road/Sunny Pines Road – approximately 1,300m to the closest residence; and
- Mayrung Road/Russells Road – approximately 600m to the closest residence.

The duration of works at each intersection is likely to be short as the proposed works include adding one or two short sections of lanes as per BAL or BAR intersection standards. Furthermore, given that there are no residential receivers within close proximity of the intersections and the minor nature of the works, construction noise from the intersection upgrades are considered insignificant and will not be further assessed.

4.3 Construction Noise Assessment

Noise emissions were predicted by modelling the noise sources, receiver locations, topographical features of the intervening area, and possible noise control treatments using CadnaA (version 2017) noise modelling computer program. The program calculates the contribution of each noise source at each specified receptor point and allows for the prediction of the total noise from a site.

The noise prediction model takes into account:

- Location of noise sources and receiver locations;
- Height of sources and receivers;
- Separation distances between sources and receivers;
- Ground type between sources and receivers (soft); and
- Attenuation from barriers (natural and purpose built).

Noise levels at any receptors resulting from construction would depend on the above and the type and duration of construction being undertaken. Furthermore, noise levels at receivers would vary substantially over the total construction program due to the transient nature and large range of plant and equipment that could be used.

Table 4.4 presents noise levels likely to be experienced at the nearby affected receivers based on the construction activities and plant and equipment associated with the proposed development site. The noise level ranges represent the noise source being located at the furthest to the closest proximity to each receiver location.

Table 4.4 – Predicted $L_{Aeq,15min}$ Construction Noise Levels at Receiver Locations, dB(A)

Plant Item	Plant Description	Predicted $L_{eq(15min)}$ Construction Noise Levels							
		R1	R2	R3	R4	R5	R6	R7	R8
Noise Management Level[1]		*40*	*40*	*40*	*40*	*40*	*40*	*40*	*40*
1	Small pile driving rig	<20-46	<20-33	<20-29	<20-29	<20-34	<20-36	<20-30	<20-34
2	Crane	<20-42	<20-29	<20-25	<20-25	<20-30	<20-32	<20-26	<20-30
3	Drum roller	<20-41	<20-28	<20-24	<20-24	<20-29	<20-31	<20-25	<20-29
4	Padfoot roller	<20-41	<20-28	<20-24	<20-24	<20-29	<20-31	<20-25	<20-29
5	Wheeled loader	<20-41	<20-28	<20-24	<20-24	<20-29	<20-31	<20-25	<20-29
6	Dump truck	<20-40	<20-27	<20-23	<20-23	<20-28	<20-30	<20-24	<20-28
7	30t Excavator	<20-39	<20-26	<20-22	<20-22	<20-27	<20-29	<20-23	<20-27
8	Grader	<20-39	<20-26	<20-22	<20-22	<20-27	<20-29	<20-23	<20-27
9	Chain trencher	<20-36	<20-23	<20	<20	<20-24	<20-26	<20	<20-24
10	Water truck	<20-36	<20-23	<20	<20	<20-24	<20-26	<20	<20-24
11	Telehandler	<20-30	<20	<20	<20	<20	<20	<20	<20
12	Forklift	<20-22	<20	<20	<20	<20	<20	<20	<20
13	Light vehicle	<20	<20	<20	<20	<20	<20	<20	<20
Up to 3 (noisiest) plant items operating concurrently [2]		**<20-52**	**<20-39**	**<20-34**	**<20-34**	**<20-40**	**<20-42**	**<20-36**	**<20-39**

Notes: 1. Noise Management Level for day period

2. Receiver may potentially be exposed to multiple pile driving rigs. Predicted noise levels also include up to three pile driving rigs, crane and drum roller operating concurrently.

Based on the construction noise levels presented in the table above, the construction management levels at Receivers R1 and R6 may be exceeded. The exceedances at the upper range of the predicted noise levels are predicted to occur only when proposed construction works are undertaken close to each receiver, which may occur while works are carried out at the boundaries of the proposed site.

It is noted that construction noise levels at all receivers are predicted to be less than the highly noise affected level of 75dB(A).

In light of the predicted noise levels above, it is recommended that a feasible and reasonable approach towards noise management measures be applied to reduce noise levels as much as possible to manage the impact from construction noise.

Further details on construction noise mitigation and management measures are provided in Section 4.4 below.

4.4 Construction Noise Mitigation and Management Measures

4.4.1 General Engineering Noise Controls

Implementation of noise control measures, such as those suggested in Australian Standard 2436-2010 "Guide to Noise Control on Construction, Demolition and Maintenance Sites", are expected to reduce predicted construction noise levels. Reference to Australian Standard 2436-2010, Appendix C, Table C1 suggests possible remedies and alternatives to reduce noise emission levels from typical construction equipment. Table C2 in Appendix C presents typical examples of noise reductions achievable after treatment of various noise sources. Table C3 in Appendix C presents the relative effectiveness of various forms of noise control treatment.

Table 4.5 below presents noise control methods, practical examples and expected noise reductions according to AS2436 and according to Renzo Tonin & Associates' opinion based on experience with past projects.

Table 4.5 – Relative Effectiveness of Various Forms of Noise Control, dB(A)

Noise Control Method	Practical Examples	Typical Noise Reduction Possible in Practice		Maximum Noise Reduction Possible in Practice	
		AS 2436	Renzo Tonin & Associates	AS 2436	Renzo Tonin & Associates
Distance	Doubling of distance between source and receiver	6	6	6	6
Screening	Acoustic barriers such as earth mounds, temporary or permanent noise barriers	5 to 10	5 to 10	15	15
Acoustic Enclosures	Engine casing lagged with acoustic insulation and plywood	15 to 25	10 to 20	50	30
Engine Silencing	Residential class mufflers	5 to 10	5 to 10	20	20

Noise Control Method	Practical Examples	Typical Noise Reduction Possible in Practice		Maximum Noise Reduction Possible in Practice	
		AS 2436	Renzo Tonin & Associates	AS 2436	Renzo Tonin & Associates
Substitution by alternative process	Use electric motors in preference to diesel or petrol	-	15 to 25	-	40

The Renzo Tonin & Associates' listed noise reductions are conservatively low and should be referred to in preference to those of AS2436.

Table 4.6 below identifies possible noise control measures, which are applicable on the construction plant likely to be used on site.

Table 4.6 – Noise Control Measures for Likely Construction Plant

Plant Description	Screening	Acoustic Enclosures	Silencing	Alternative Process
Small pile driving rig	✔	✖	✔	✔
Crane	✔	✔	✔	✖
Drum roller	✔	✖	✔	✖
Padfoot roller	✔	✖	✔	✖
Wheeled loader	✔	✖	✔	✖
Dump truck	✔	✖	✔	✖
30t Excavator	✔	✖	✔	✖
Grader	✔	✖	✔	✖
Chain trencher	✔	✖	✔	✔
Water truck	✔	✖	✔	✖
Telehandler	✔	✖	✔	✖
Forklift	✔	✖	✔	✖

4.4.2 Noise Management Measures

The following recommendations provide in-principle feasible and reasonable noise control solutions to reduce noise impacts to sensitive receivers. Where actual construction activities differ from those assessed in this report, more detailed design of noise control measures may be required once specific items of plant and construction methods have been chosen and assessed on site.

The advice provided here is in respect of acoustics only. Supplementary professional advice may need to be sought in respect of fire ratings, structural design, buildability, fitness for purpose and the like.

In addition to physical noise controls, the following general noise management measures should be followed:

- Use less noisy plant and equipment, where feasible and reasonable.

- Plant and equipment should be properly maintained.
- Provide special attention to the use and maintenance of 'noise control' or 'silencing' kits fitted to machines to ensure they perform as intended.
- Strategically position plant on site to reduce the emission of noise to the surrounding neighbourhood and to site personnel.
- Avoid any unnecessary noise when carrying out manual operations and when operating plant.
- Any equipment not in use for extended periods during construction work should be switched off.
- In addition to the noise mitigation measures outlined above, a management procedure would need to be put in place to deal with noise complaints that may arise from construction activities. Each complaint would need to be investigated and appropriate noise amelioration measures put in place to mitigate future occurrences, where the noise in question is in excess of allowable limits.
- Good relations with people living and working in the vicinity of a construction site should be established at the beginning of a project and be maintained throughout the project, as this is of paramount importance. Keeping people informed of progress and taking complaints seriously and dealing with them expeditiously is critical. The person selected to liaise with the community should be adequately trained and experienced in such matters.

Where noise level exceedances cannot be avoided, then consideration may be given to implementing time restrictions and/or providing periods of repose for residents, where feasible and reasonable. That is, daily periods of respite from noisy activities may also be scheduled for building occupants during construction hours.

Some items of plant may exceed noise limits even after noise treatment is applied. To reduce the overall noise impact, the use of noisy plant may be restricted to within certain time periods, where feasible and reasonable and to be negotiated with Council and the residents. Allowing the construction activities to proceed, despite the noise exceedance may be the preferred method in order to complete the works expeditiously.

5 Operational Noise Assessment

5.1 Operational Noise Criteria

Noise impact from the general operation of the proposed solar farm is assessed against the NSW Industrial Noise Policy (INP). The assessment procedure in terms of the INP has two components:

- Controlling intrusive noise impacts in the short term for residences
- Maintaining noise level amenity for particular land uses for residences and other land uses.

In accordance with the INP, noise impact should be assessed in terms of both intrusiveness and amenity.

5.1.1 Intrusiveness Criteria

According to the NSW INP, the intrusiveness of a mechanical noise source may generally be considered acceptable if the equivalent continuous (energy-average) A-weighted level of noise from the source (represented by the L_{Aeq} descriptor), measured over a 15-minute period, does not exceed the background noise level measured in the absence of the source by more than 5dB(A). It is noted that this is applicable to residential properties only.

Therefore, the intrusiveness criterion for residential noise receptors as summarised in the INP is as follows:

- **$L_{Aeq,\ 15\ minute}$ ≤ Rating Background Level (L_{A90}) + 5 dB(A)**

Based on the monitored background noise levels presented in Section 3.2 and the proposed operating hours of the solar farm, the intrusiveness criteria for the potentially most affected residential receiver locations are presented below.

Table 5.1 – Intrusiveness Noise Criteria, dB(A)

Receiver Location	Intrusiveness Criteria – $L_{Aeq,15min}$		
	Day	Evening	Night
All receivers	30 + 5 = **35**	30 + 5 = **35**	30 + 5 = **35**

Notes: 1. Intrusiveness criteria only applicable for residential receivers

5.1.2 Amenity Criteria

To limit continuing increases in noise levels, the maximum ambient noise level within an area from industrial noise sources should not normally exceed the acceptable noise levels specified in Table 2.1 of the NSW INP, the applicable parts of which are reproduced below.

Nearby noise sensitive receivers consist of residential properties situated in a rural area. Based on the nature of these receivers, the amenity criteria (L_{Aeq}) for rural residential properties will be applied. The applicable amenity noise criteria are presented in the table below.

Table 5.2 – Applicable Amenity Noise Criteria, dB(A)

Type of Receiver	Indicative Noise Amenity Area	Time of Day	Recommended L_{Aeq} Amenity Noise Level	
			Acceptable	Maximum
Residence	Rural	Day	50	55
		Evening	45	50
		Night	40	45

Notes: 1. Day is defined as 7:00am to 6:00pm, Monday to Saturday; 8:00am to 6:00pm Sundays & Public Holidays.
2. Evening is defined as 6:00pm to 10:00pm, Monday to Sunday & Public Holidays.
3. Night is defined as 10:00pm to 7:00am, Monday to Saturday; 10:00pm to 8:00am, Sundays & Public Holidays.

Comparing the amenity and the intrusiveness criteria shows that the intrusiveness criteria are more stringent for day, evening and night periods. Compliance with the intrusiveness criteria would result in compliance with the amenity criteria. Therefore, the intrusiveness criteria would be assessed for from herein.

5.1.3 Sleep Disturbance

Given the proposed operating hours of the project, noise emanating from the project has been assessed for its potential to disturb sleep. The NSW EPA has made the following policy statement with respect to sleep disturbance:

> *"Peak noise level events, such as reversing beepers, noise from heavy items being dropped or other high noise level events, have the potential to cause sleep disturbance. The potential for high noise level events at night and effects on sleep should be addressed in noise assessments for both the construction and operational phases of a development. The INP does not specifically address sleep disturbance from high noise level events.*
>
> *Research on sleep disturbance is reviewed in the NSW Road Noise Policy. This review concluded that the range of results is sufficiently diverse that it was not reasonable to issue new noise criteria for sleep disturbance.*
>
> *From the research, the EPA recognised that the current sleep disturbance criterion of an $L_{A1, (1\ minute)}$ not exceeding the $L_{A90, (15\ minute)}$ by more than 15 dB(A) is not ideal. Nevertheless, as there is insufficient evidence to determine what should replace it, the EPA will continue to use it as a guide to identify the likelihood of sleep disturbance. This means that where the criterion is met, sleep disturbance is not likely, but where it is not met, a more detailed analysis is required.*
>
> *The detailed analysis should cover the maximum noise level or $L_{A1, (1\ minute)}$, that is, the extent to which the maximum noise level exceeds the background level and the number of times this happens during the night-time period. Some guidance on possible impact is contained in the review of research*

results in the NSW Road Noise Policy. Other factors that may be important in assessing the extent of impacts on sleep include:

- *how often high noise events will occur*
- *time of day (normally between 10pm and 7am)*
- *whether there are times of day when there is a clear change in the noise environment (such as during early morning shoulder periods).*

The $L_{A1, (1\ minute)}$ descriptor is meant to represent a maximum noise level measured under 'fast' time response. The EPA will accept analysis based on either $L_{A1, (1\ minute)}$ or $L_{A, (Max)}$.

Source: http://www.epa.nsw.gov.au/noise/applicnotesindustnoise.htm Downloaded: 04.12.2015"

The NSW EPA confirm that a sleep disturbance criterion of $L_{A1(1min)} \leq L_{A90(15min)}$ + 15dB(A), should only be used as a first step guide and where the criteria is not met, more detailed analysis is required as explained in the text above. The L_{Amax} descriptor may be used as an alternative to the $L_{A1(1min)}$ descriptor.

It is noted that the subject site will potentially operate for part of the night time period (prior to 7am) when there is sunlight, during the summer months.

Therefore, the sleep disturbance criterion for the project is presented in Table 5.3.

Table 5.3 – Sleep Disturbance Criterion, dB(A)

Receiver	Sleep Disturbance Criteria, L_{Amax}
All residential receivers	30 + 15 = **45**

5.2 Operational Noise Sources

The proposed solar farm will operate 654,200 solar panels, which would be installed on single-axis trackers. Tracking systems involve the panels being driven by motors to track the arc of the sun to maximise the solar effect. Therefore, the tracking motors are a potential source of mechanical noise and are included in this assessment. Up to a total of 7,800 tracking motors (NexTracker or equivalent) will be employed to drive the solar panels and are to be evenly distributed across the solar farm site. The tracking motors would turn no more than five (5) degrees every 15 minutes and would operate no more than one (1) minute out of every 15 minute period.

In addition to the trackers, the site will require the operation of up to 42 Power Conversion Units (PCUs) distributed evenly across the solar farm site. Each PCU will contain a transformer, inverters, HV switchgear, communications and ancillary equipment. Sound power levels have been based on previous similar projects implementing an Ingecon Inverter (model 1640TL B630).

An energy storage facility and a transformer and utility facility will also be located at the northeast corner of the site. A total of 22 containers, supported by 44 PCUs, are to be located within the energy storage facility and would house batteries used to store energy, each cooled by an air-conditioning unit.

The PCUs used for the energy storage facility will be the same PCUs used within the solar farm. A new substation is also proposed within the subdivided portion of land in the northeast corner containing one main transformer, associated switchgear, and control and protection equipment.

An overview of the site and the location of the facilities are presented in Appendix C.

During operations, it is assumed that four (4) staff members will attend site daily during the day time period to inspect the equipment. It is also assumed that each staff member will travel around the subject site in a light vehicle.

It should be noted that the assessment has been undertaken based on available information and is subject to detailed design.

Based on the above, the following table lists associated plant and equipment likely to be used for the operation of the proposed solar farm and their corresponding sound power levels.

Table 5.4 – Typical Operational Plant and Equipment & Sound Power Levels

Plant Item	Plant Description	L_{Aeq} Sound Power Levels, dB(A) re. 1pW
1	Tracker Motor (up to 7,800 in total)	78 (each)
2	Solar Farm Power Conversion Unit (Ingecon 1640TL B630 Inverters, up to 42 in total)	88 (each)
3	Energy Storage Facility PCUs (up to 44 in total)	88 (each)
4	Energy Storage Facility (air-conditioning units, up to 22 in total)	75 (each)
5	Substation (Transformer, 132kV)	83
6	Light vehicle (up to 4 in total)	88 (each)

The sound power levels for the plant and equipment presented in the above table are provided by the manufacturer, information from past projects and/or information held in our library files.

5.3 'Modifying Factor' Adjustments

Further to the above and in accordance with the INP, where the character of the noise in question is assessed as particularly annoying (ie. if it has an inherently tonal, low frequency, impulsive or intermittent characteristic), then an adjustment of 5dB(A) for each annoyance aspect, up to a total of 10dB(A), is to be added to the predicted value to penalise the noise for its potential increase in annoyance.

Table 4.1 of Chapter 4 of the NSW INP provides definitive procedures for determining whether a penalty or adjustment should be applied from increased annoyance. For the assessment of the solar farm, the noise from the inverters is considered to be tonal in nature. Therefore, a 5dB(A) penalty has been applied to the predicted noise contributions from the inverters.

5.4 Operational Noise Assessment

Noise emissions were predicted by modelling the noise sources, receiver locations, topographical features of the intervening area, and possible noise control treatments using CadnaA (version 2017) noise modelling computer program. The program calculates the contribution of each noise source at each specified receptor point and allows for the prediction of the total noise from a site.

The noise prediction model takes into account:

- Location of noise sources and receiver locations;
- Height of sources and receivers;
- Separation distances between sources and receivers;
- Ground type between sources and receivers (soft); and
- Attenuation from barriers (natural and purpose built).

Furthermore, in accordance with the INP noise predictions were prepared for each of the following meteorological conditions:

1. Calm & isothermal conditions (acoustically neutral) – no wind and no temperature inversion
2. Slight to gentle breeze – 3m/s wind velocity at 10m from ground level between each noise source and each noise receiver (as per INP default wind conditions). Wind direction was based on wind travelling from the source to the receiver.
3. Moderate temperature inversion – applicable for noise predictions during night time periods only

Table 5.5 below presents the predicted noise levels for the worst case scenario based on concurrent operation of all the plant and equipment shown in Table 5.4. The tracker motors were time corrected based on their operation of one (1) minute out of a 15 minute period.

Table 5.5 – Predicted $L_{Aeq,15min}$ Operational Noise Levels at Receiver Locations, dB(A)

Receiver Location	Intrusiveness Criteria[1]	Predicted Operational Noise Levels, $L_{Aeq, 15min}$			Comply? (Yes/No)
		Calm & Isothermal Conditions	Slight to Gentle Breeze	Moderate Temperature Inversion[2]	
Receiver R1	*35*	28	34	33	Yes
Receiver R2	*35*	<20	20	<20	Yes
Receiver R3	*35*	<20	<20	<20	Yes
Receiver R4	*35*	<20	<20	<20	Yes
Receiver R5	*35*	20	26	25	Yes
Receiver R6	*35*	26	33	32	Yes
Receiver R7	*35*	<20	<20	<20	Yes
Receiver R8	*35*	<20	24	23	Yes

Receiver Location	Intrusiveness Criteria[1]	Predicted Operational Noise Levels, $L_{Aeq, 15min}$			Comply? (Yes/No)
		Calm & Isothermal Conditions	Slight to Gentle Breeze	Moderate Temperature Inversion[2]	

Notes: 1. Criteria for Day, Evening and Night periods
2. Applicable for the night time period only

Based on the predicted operational noise levels presented in the table above, predicted noise levels at the nearest receivers comply with the nominated criteria under all scenarios and meteorological conditions.

Therefore, no further reasonable and feasible noise mitigation measures are required to reduce operational noise impacts.

5.5 Sleep Disturbance Assessment

During the night time period, only the mechanical plant will be operating, including the tracking motors (early morning before 6am) and inverters with integrated transformers. Noise emissions from these plant items are considered to be continuous with no potential for high peak noise level events. Therefore, the L_{Amax} noise levels experienced at the identified receivers will be similar to the predicted $L_{Aeq,15min}$ noise levels shown in Table 5.5. Therefore, it is expected that the L_{Amax} noise levels experienced at the identified receivers will be well below the established sleep disturbance criteria of 45dB(A).

6 Vibration Assessment

Vibration generating activities would occur only during the construction phase of the project. There are no vibration generating activities expected during the operational phase. As the nearest identified receivers are in excess of 100m from the subject site and there are no high vibration producing plant items to be used, structural damage due to vibration is not expected. Assessment for vibration impact on human comfort is assessed in accordance with EPA requirements.

6.1 Vibration Criteria

Assessment of potential disturbance from vibration on human occupants of buildings is made in accordance with the EPA's 'Assessing Vibration; a technical guideline' (DECC, 2006). The guideline provides criteria which are based on the British Standard BS 6472-1992 'Evaluation of human exposure to vibration in buildings (1-80Hz)'. Sources of vibration are defined as either 'Continuous', 'Impulsive' or 'Intermittent'. Table 6.1 provides definitions and examples of each type of vibration.

Table 6.1 – Types of Vibration

Type of Vibration	Definition	Examples
Continuous vibration	Continues uninterrupted for a defined period (usually throughout the day-time and/or night-time)	Machinery, steady road traffic, continuous construction activity (such as tunnel boring machinery).
Impulsive vibration	A rapid build-up to a peak followed by a damped decay that may or may not involve several cycles of vibration (depending on frequency and damping). It can also consist of a sudden application of several cycles at approximately the same amplitude, providing that the duration is short, typically less than 2 seconds	Infrequent: Activities that create up to 3 distinct vibration events in an assessment period, e.g. occasional dropping of heavy equipment, occasional loading and unloading.
Intermittent vibration	Can be defined as interrupted periods of continuous or repeated periods of impulsive vibration that varies significantly in magnitude	Trains, nearby intermittent construction activity, passing heavy vehicles, forging machines, impact pile driving, jack hammers. Where the number of vibration events in an assessment period is three or fewer, this would be assessed against impulsive vibration criteria.

Source: Assessing Vibration; a technical guideline, Department of Environment & Climate Change, 2006

The vibration criteria are defined as a single weighted root mean square (rms) acceleration source level in each orthogonal axis. Section 2.3 of the guideline states:

> *"Evidence from research suggests that there are summation effects for vibrations at different frequencies. Therefore, for evaluation of vibration in relation to annoyance and comfort, overall weighted rms acceleration values of the vibration in each orthogonal axis are preferred (BS 6472)."*

When applying the criteria, it is important to note that the three directional axes are referenced to the human body, i.e. x-axis (back to chest), y-axis (right side to left side) or z-axis (foot to head). Vibration may enter the body along different orthogonal axes and affect it in different ways. Therefore,

application of the criteria requires consideration of the position of the people being assessed, as illustrated in Figure 2. For example, vibration measured in the horizontal plane is compared with x- and y-axis criteria if the concern is for people in an upright position, or with the y- and z- axis criteria if the concern is for people in the lateral position.

Figure 2 – Orthogonal Axes for Human Exposure to Vibration

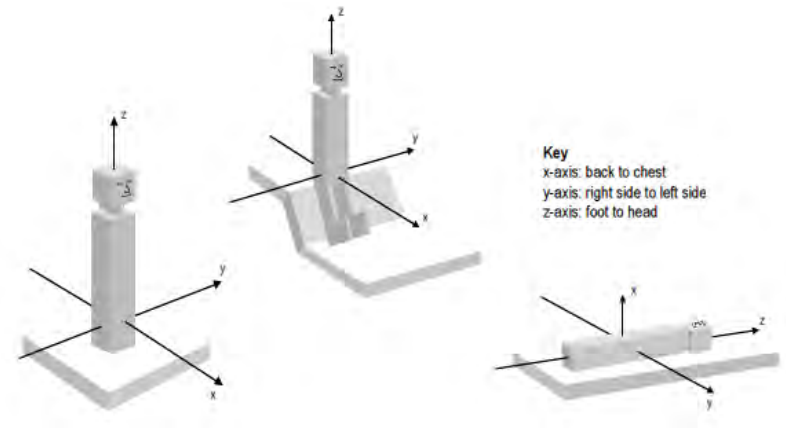

The preferred and maximum values for continuous and impulsive vibration are defined in Table 2.2 of the guideline and are reproduced in Table 6.2 for the applicable receivers.

Table 6.2 – Preferred and Maximum Levels for Human Comfort

Location	Assessment Period[1]	Preferred Values		Maximum Values	
		z-axis	x- and y-axis	z-axis	x- and y-axis
Continuous vibration (weighted RMS acceleration, m/s^2, 1-80Hz)					
Residences	Daytime	0.010	0.0071	0.020	0.014
	Night-time	0.007	0.005	0.014	0.010
Impulsive vibration (weighted RMS acceleration, m/s^2, 1-80Hz)					
Residences	Daytime	0.30	0.21	0.60	0.42
	Night-time	0.10	0.071	0.20	0.14

Notes: 1. Daytime is 7:00am to 10:00pm and Night-time is 10:00pm to 7:00am

The acceptable vibration dose values (VDV) for intermittent vibration are defined in Table 2.4 of the guideline and are reproduced in Table 6.3 for the applicable receiver type.

Table 6.3 – Acceptable Vibration Dose Values for Intermittent Vibration (m/s$^{1.75}$)

Location	Daytime[1]		Night-time[1]	
	Preferred Value	Maximum Value	Preferred Value	Maximum Value
Residences	0.20	0.40	0.13	0.26

Notes: 1. Daytime is 7:00am to 10:00pm and Night-time is 10:00pm to 7:00am

6.2 Potential Vibration Impacts

Based on the proposed plant items presented in Table 4.3, vibration generated by construction plant was estimated and potential vibration impacts are summarised in Table 6.4 below. The assessment is relevant to the identified receiver locations.

Table 6.4 – Potential Vibration Impacts for Identified Receivers

Receiver Location	Approx. Distance to Nearest Buildings from Works	Type of Nearest Sensitive Buildings	Assessment on Potential Vibration Impacts	Vibration Monitoring
Receiver R1	270m	Residential	Very low risk of adverse comments	Not required
Receiver R2	1,240m	Residential	Very low risk of adverse comments	Not required
Receiver R3	1,800m	Residential	Very low risk of adverse comments	Not required
Receiver R4	1,800m	Residential	Very low risk of adverse comments	Not required
Receiver R5	1,200m	Residential	Very low risk of adverse comments	Not required
Receiver R6	860m	Residential	Very low risk of adverse comments	Not required
Receiver R7	1,600m	Residential	Very low risk of adverse comments	Not required
Receiver R8	1,100m	Residential	Very low risk of adverse comments	Not required

The potential for adverse comments to vibration impacts during the construction works was determined to be very low due to the large distances between the receiver locations and the construction activities. Therefore, vibration mitigation measures and vibration monitoring are not required at the identified receiver locations during construction works associated with the project.

7 Road Traffic Noise Assessment

Noise impact from the potential increase in traffic on the surrounding road network due to construction and operational activities is assessed against the NSW 'Road Noise Policy' (RNP). The RNP sets out criteria to be applied to particular types of road and land uses. These noise criteria are to be applied when assessing noise impact and determining mitigation measures for sensitive receivers that are potentially affected by road traffic noise associated with the construction and operation of the subject site, with the aim of preserving the amenity appropriate to the land use.

Vehicle access to the subject site will be via Mayrung Road, Russells Road and Sunny Pines Road. Haulage routes have been designated along Riverina Highway, Lakers Road, Conargo Road, Mooney Swamp Road and Mayrung Road to the site entrances. Based on information provided by the client, the peak vehicle movements during the 3-month peak construction stage of the project are presented in the following table.

Table 7.1 – Summary of the Estimated Construction Traffic Volumes During Peak Construction

Vehicle Type	Trips Per Day (peak)
Cars/ light vehicles	254
Trucks/ heavy vehicles	52

During the operational stage, vehicle access to the site will be maintenance vans and delivery trucks (4 x site staff light vehicle and 5 x miscellaneous courier deliveries per week) which would occur on an irregular basis. Furthermore, trucks may be required to transport water to the site for use to clean the solar panels. This would require 44 truck movements to occur once per year and as a worst case, over one day.

7.1 Road Traffic Noise Criteria

Based on functionality, Riverina Highway and Conargo Road are classified as arterial road; Mooney Swamp Road and Mayrung Road are categorised as sub-arterial roads; and Lakers Road, Russells Road and Sunny Pines Road are categorised as local roads. For existing residences affected by additional traffic on existing arterial and local roads generated by land use developments, the following RNP road traffic noise criteria apply.

Table 7.2 – RNP Road Traffic Noise Criteria, dB(A)

Road Category	Type of Project/Land Use	Assessment Criteria, dB(A)	
		Day 7am – 10pm	Night 10pm – 7am
Freeway/arterial/sub-arterial roads	3. Existing residences affected by additional traffic on existing freeways/arterial/sub-arterial roads generated by land use developments	$L_{Aeq,(15\ hour)}$ 60 (external)	$L_{Aeq,(9\ hour)}$ 55 (external)
Local Roads	6. Existing residences affected by additional traffic on existing local roads generated by land use developments	$L_{Aeq,(1\ hour)}$ 55 (external)	$L_{Aeq,(1\ hour)}$ 50 (external)

7.2 Predicted Road Traffic Noise

As the proposed vehicle access to the subject site is much greater during the construction stage than the operational stage, road traffic noise assessment is only considered for the construction stage. Compliance during the construction stage would result in compliance during the operational stage. Therefore, operational traffic will not be considered further from herein.

Construction vehicle movements will only occur during the day time period when construction works occur.

Results of the road traffic noise predictions are presented in the table below. It is noted that the predicted noise levels represent the traffic noise contribution from the vehicle movements associated with the construction works and does not take into account of existing traffic noise levels due to existing general traffic flows as existing traffic volume data was not available.

Table 7.3 – Predicted Road Traffic Noise Contribution Levels Along Public Roads, dB(A) $L_{Aeq(15\ Hour)}$

Receiver	Criteria	Traffic Movements	Speed (km/h)[1]	Approx. Distance to Road[2]	Predicted Noise Level	Exceed?
Residences on Arterial/Sub-arterial Roads	$L_{Aeq,\ (15\ hour)}$ 60	254 light vehicles 52 heavy vehicles	100	25m	52	No
Residences on Local Roads	$L_{Aeq,\ (1\ hour)}$ 55	23 light vehicles 5 heavy vehicles[3]	80	200m	39	No

Notes:
1. Based on posted speed limit
2. Based on approximate distance from facade of closest dwelling to the road
3. Criteria for local roads is based on a 1 hour period, therefore predicted level is based on full day counts averaged over a one hour period (between 7am and 6pm).

From the above table, it can be seen that road traffic noise level contributions from the vehicle movements associated with the construction works are at least 8dB(A) below the applicable noise criterion based on dwellings being 25m from the road. Given that residences are located within a rural environment, distances between the road and the dwellings would likely be significantly greater than 25m. Similarly, the closest residential dwelling to a local road (Lakers Road, Russells Road and Sunny Pines Road) was found to be approximately 200m based on aerial photography. Vehicle movements due to construction works were found to be at least 16dB(A) below the applicable noise criterion for local roads.

Therefore, traffic noise levels as a result of the construction works for the solar farm would not adversely contribute to the existing traffic noise levels at the most affected residences along the surrounding roads.

8 Conclusion

Renzo Tonin and Associates has completed an environmental noise and vibration assessment of the proposed Currawarra Solar Farm.

Noise emissions from the construction phase of the project were predicted to exceed the construction noise management levels at the nearest affected receivers. In-principle recommendations are provided in Section 4.4 to limit the potential impact of noise generated by construction activities to acceptable levels.

Given the large separation distances between the nearest affected receivers and the subject site, vibration impacts resulting in structural damage to buildings at the nearest affected receivers are determined to be negligible and there is low risk of adverse comments from occupants of dwellings due to construction vibration.

Noise emissions from the operational phase of the project were predicted to comply with the nominated criteria at the nearest affected receivers.

Road traffic noise impacts on residential properties along the access and construction haulage routes were found to comply with the relevant RNP traffic noise criteria.

APPENDIX A Glossary of Terminology

The following is a brief description of the technical terms used to describe noise to assist in understanding the technical issues presented.

Adverse weather	Weather effects that enhance noise (that is, wind and temperature inversions) that occur at a site for a significant period of time (that is, wind occurring more than 30% of the time in any assessment period in any season and/or temperature inversions occurring more than 30% of the nights in winter).
Ambient noise	The all-encompassing noise associated within a given environment at a given time, usually composed of sound from all sources near and far.
Assessment period	The period in a day over which assessments are made.
Assessment point	A point at which noise measurements are taken or estimated. A point at which noise measurements are taken or estimated.
Background noise	Background noise is the term used to describe the underlying level of noise present in the ambient noise, measured in the absence of the noise under investigation, when extraneous noise is removed. It is described as the average of the minimum noise levels measured on a sound level meter and is measured statistically as the A-weighted noise level exceeded for ninety percent of a sample period. This is represented as the L90 noise level (see below).
Decibel [dB]	The units that sound is measured in. The following are examples of the decibel readings of every day sounds: 0dB The faintest sound we can hear 30dB A quiet library or in a quiet location in the country 45dB Typical office space. Ambience in the city at night 60dB CBD mall at lunch time 70dB The sound of a car passing on the street 80dB Loud music played at home 90dB The sound of a truck passing on the street 100dB The sound of a rock band 115dB Limit of sound permitted in industry 120dB Deafening
dB(A)	A-weighted decibels. The A- weighting noise filter simulates the response of the human ear at relatively low levels, where the ear is not as effective in hearing low frequency sounds as it is in hearing high frequency sounds. That is, low frequency sounds of the same dB level are not heard as loud as high frequency sounds. The sound level meter replicates the human response of the ear by using an electronic filter which is called the "A" filter. A sound level measured with this filter switched on is denoted as dB(A). Practically all noise is measured using the A filter.
dB(C)	C-weighted decibels. The C-weighting noise filter simulates the response of the human ear at relatively high levels, where the human ear is nearly equally effective at hearing from mid-low frequency (63Hz) to mid-high frequency (4kHz), but is less effective outside these frequencies.
Frequency	Frequency is synonymous to pitch. Sounds have a pitch which is peculiar to the nature of the sound generator. For example, the sound of a tiny bell has a high pitch and the sound of a bass drum has a low pitch. Frequency or pitch can be measured on a scale in units of Hertz or Hz.
Impulsive noise	Having a high peak of short duration or a sequence of such peaks. A sequence of impulses in rapid succession is termed repetitive impulsive noise.
Intermittent noise	The level suddenly drops to that of the background noise several times during the period of observation. The time during which the noise remains at levels different from that of the ambient is one second or more.
L_{Max}	The maximum sound pressure level measured over a given period.
L_{Min}	The minimum sound pressure level measured over a given period.

L_1	The sound pressure level that is exceeded for 1% of the time for which the given sound is measured.
L_{10}	The sound pressure level that is exceeded for 10% of the time for which the given sound is measured.
L_{90}	The level of noise exceeded for 90% of the time. The bottom 10% of the sample is the L90 noise level expressed in units of dB(A).
L_{eq}	The "equivalent noise level" is the summation of noise events and integrated over a selected period of time.
Reflection	Sound wave changed in direction of propagation due to a solid object obscuring its path.
SEL	Sound Exposure Level (SEL) is the constant sound level which, if maintained for a period of 1 second would have the same acoustic energy as the measured noise event. SEL noise measurements are useful as they can be converted to obtain Leq sound levels over any period of time and can be used for predicting noise at various locations.
Sound	A fluctuation of air pressure which is propagated as a wave through air.
Sound absorption	The ability of a material to absorb sound energy through its conversion into thermal energy.
Sound level meter	An instrument consisting of a microphone, amplifier and indicating device, having a declared performance and designed to measure sound pressure levels.
Sound pressure level	The level of noise, usually expressed in decibels, as measured by a standard sound level meter with a microphone.
Sound power level	Ten times the logarithm to the base 10 of the ratio of the sound power of the source to the reference sound power.
Tonal noise	Containing a prominent frequency and characterised by a definite pitch.

APPENDIX B Long-Term Noise Monitoring Methodology

B.1 Noise Monitoring Equipment

A long-term unattended noise monitor consists of a sound level meter housed inside a weather resistant enclosure. Noise levels are monitored continuously with statistical data stored in memory for every 15-minute period.

Long term noise monitoring was conducted using the following instrumentation:

Description	Type	Octave Band Data	Logger Location(s)
RTA04 (CESVA SC310)	Type 1	1/1	L1

Notes: All meters comply with AS IEC 61672.1 2004 "Electroacoustics - Sound Level Meters" and designated either Type 1 or Type 2 as per table, and are suitable for field use.

The equipment was calibrated prior and subsequent to the measurement period using a Bruel & Kjaer Type 4231 calibrator. No significant drift in calibration was observed.

B.2 Meteorology During Monitoring

Measurements affected by extraneous noise, wind (greater than 5m/s) or rain were excluded from the recorded data in accordance with the NSW INP. Determination of extraneous meteorological conditions was based on data provided by the Bureau of Meteorology (BOM), for a location considered representative of the noise monitoring location(s). However, the data was adjusted to account for the height difference between the BOM weather station, where wind speed and direction is recorded at a height of 10m above ground level, and the microphone location, which is typically 1.5m above ground level (and less than 3m). The correction factor applied to the data is based on Table C.1 of ISO 4354:2009 '*Wind actions on structures*'.

B.3 Noise vs Time Graphs

Noise almost always varies with time. Noise environments can be described using various descriptors to show how a noise ranges about a level. In this report, noise values measured or referred to include the L_{10}, L_{90}, and L_{eq} levels. The statistical descriptors L_{10} and L_{90} measure the noise level exceeded for 10% and 90% of the sample measurement time. The L_{eq} level is the equivalent continuous noise level or the level averaged on an equal energy basis. Measurement sample periods are usually ten to fifteen minutes. The Noise -vs- Time graphs representing measured noise levels, as presented in this report, illustrate these concepts for the broadband dB(A) results.

APPENDIX C Site Overview

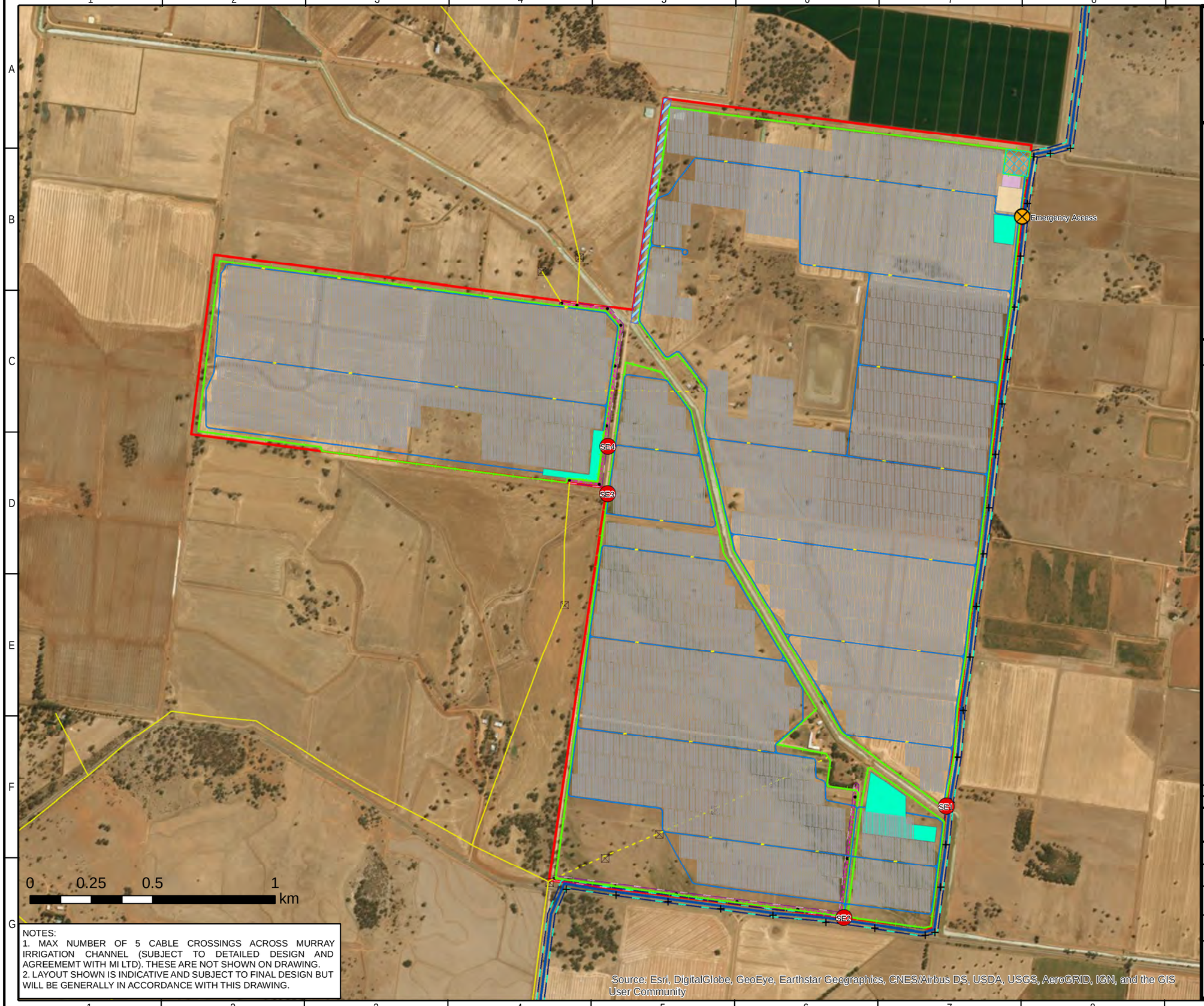

NOTES:
1. MAX NUMBER OF 5 CABLE CROSSINGS ACROSS MURRAY IRRIGATION CHANNEL (SUBJECT TO DETAILED DESIGN AND AGREEMEMT WITH MI LTD). THESE ARE NOT SHOWN ON DRAWING.
2. LAYOUT SHOWN IS INDICATIVE AND SUBJECT TO FINAL DESIGN BUT WILL BE GENERALLY IN ACCORDANCE WITH THIS DRAWING.

Source: Esri, DigitalGlobe, GeoEye, Earthstar Geographics, CNES/Airbus DS, USDA, USGS, AeroGRID, IGN, and the GIS User Community

CURRAWARRA SOLAR FARM

INFRASTRUCTURE

CONTAINS INFORMATION FROM STATE OF NEW SOUTH WALES (DEPARTMENT OF NATURAL RESOURCES AND MINES) 2017.

LEGEND

- SINGLE AXIS 84 MODULE TRACKER
- POWER CONVERSION UNIT WITH HARDSTANDING
- SITE ENTRANCE
- EMERGENCY ACCESS
- PROPOSED NEW ACCESS TRACK
- TEMPORARY CONSTRUCTION COMPOUND AND LAYDOWN
- PROPOSED TRANSFORMER AND UTILITY FACILITY
- PROPOSED BATTERY STORAGE
- PROPOSED SECURITY FENCE
- PROPOSED REROUTE OF 22kV POWERLINE
- PROPOSED EASEMENT CORRIDOR
- PROPOSED RELOCATED 22kV POLE
- EXISTING 22kV POWERLINE TO BE REROUTED
- EXISTING 22kV POWERLINE (ESSENTIAL ENERGY)
- EXISTING 22kV POLE (ESSENTIAL ENERGY)
- EXISTNG 132kV POLE (TRANSGRID)
- EXISTING 132kV POWERLINE (TRANSGRID)
- TRANSGRID EASEMENT CORRIDOR
- MURRY IRRIGATION EASEMENT CORRIDOR
- SUBDIVIDED AREA
- CADASTRAL SITE BOUNDARY

INFRAS DWG	NA	APPD DATE	03-10-2017
LAYOUT DWG	NA	LAYOUT NO.	INFRASTRUCTURE_06_20170927

DRAWING NUMBER
03747D1001-05

SCALE - 1:15,000 @ A3

COORDS
GDA 1994 MGA Zone 55

PLANNING PERMIT APPLICATION

THIS DRAWING IS THE PROPERTY OF RES AUSTRALIA PTY LTD AND NO REPRODUCTION MAY BE MADE IN WHOLE OR IN PART WITHOUT PERMISSION

SUITE 4, LEVEL 1
760 PACIFIC HIGHWAY
CHATSWOOD, NSW 2067
TEL +61 (0)2 8440 7400
EMAIL: info-australia@res-group.com

APPENDIX D Long Term Noise Monitoring Results

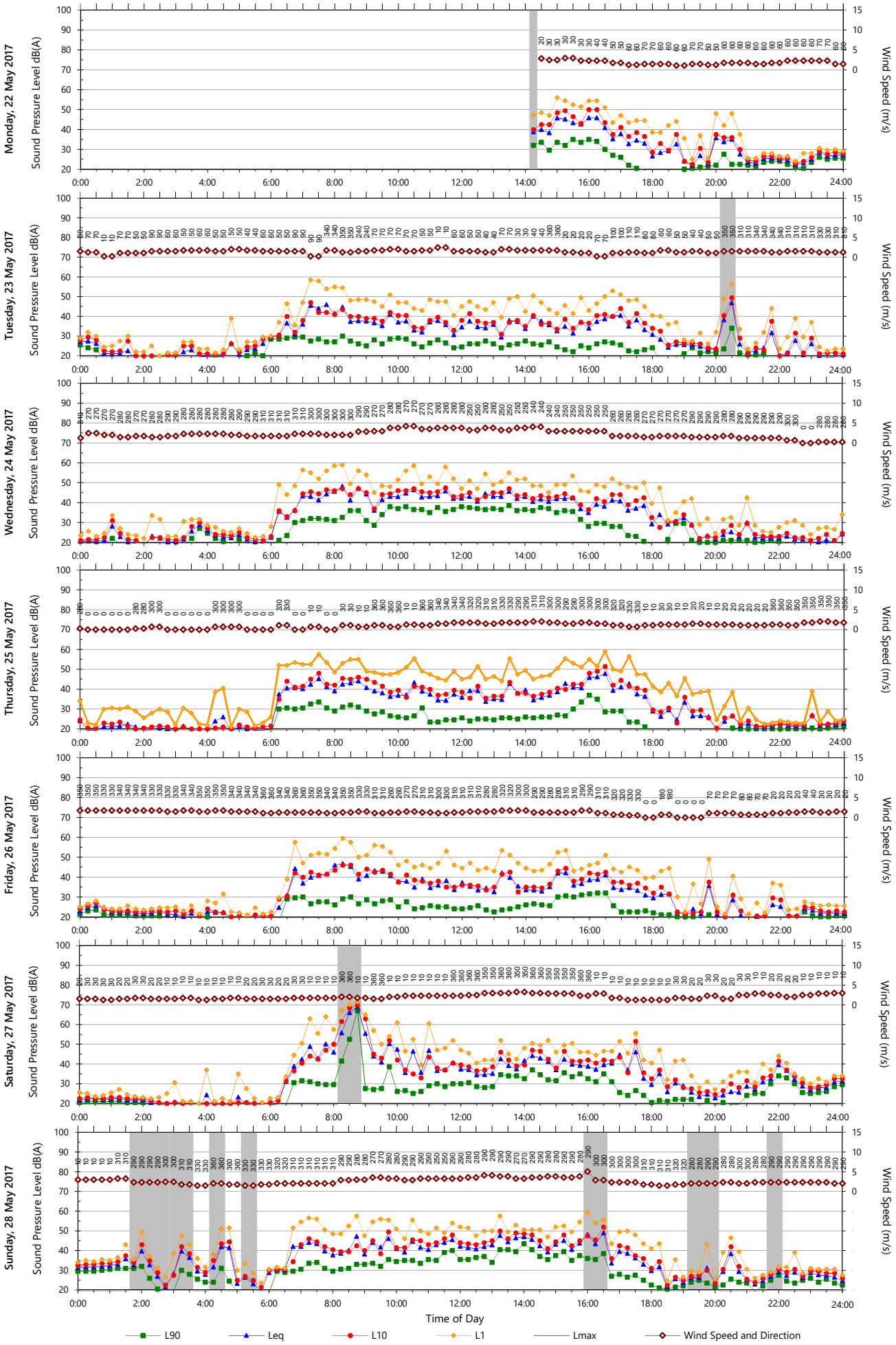

Data File: 2017-05-22_14-00-00_001_RTA.xls

Template: QTE-26 (rev 15) Logger Graphs Program

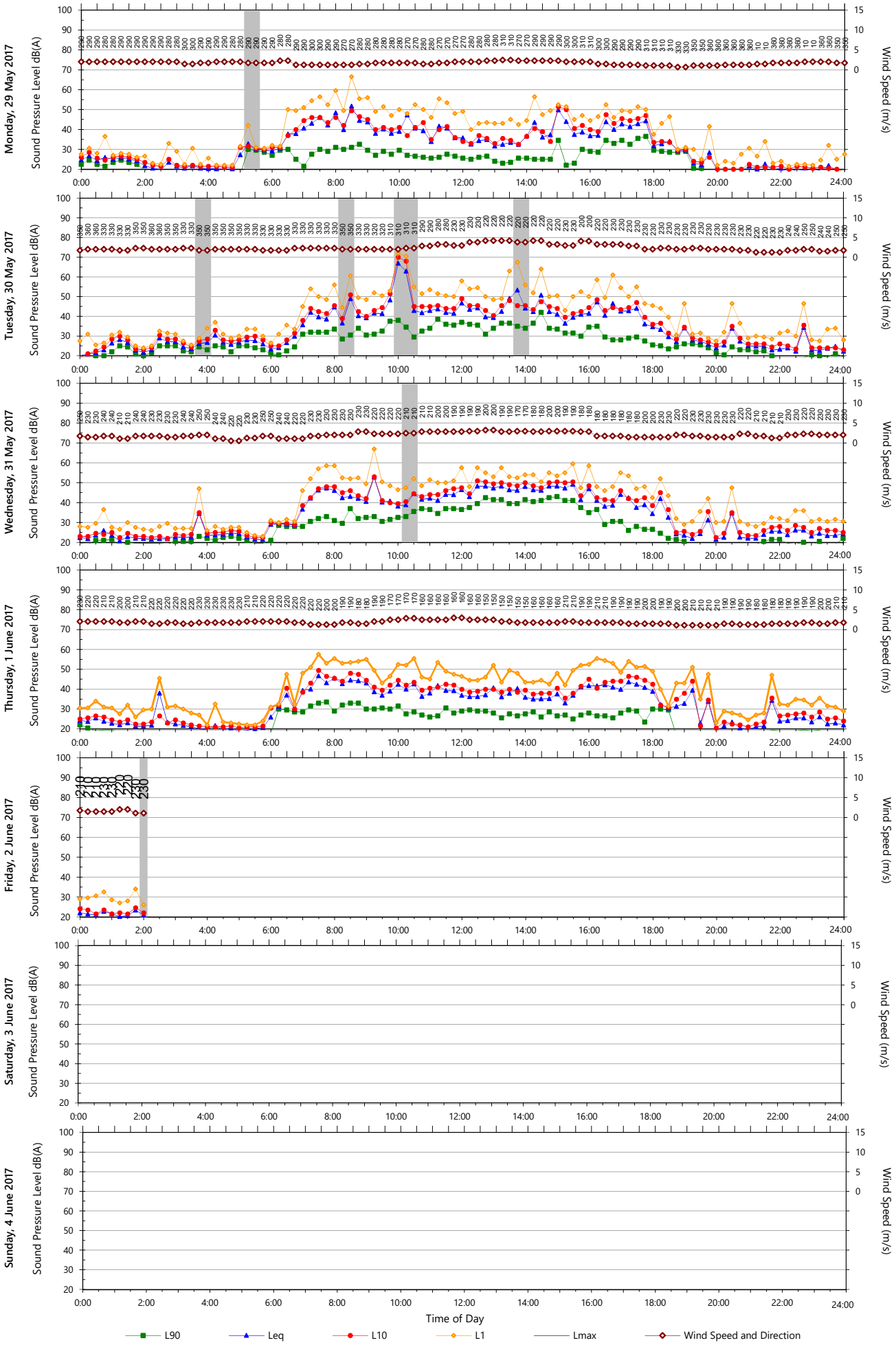

Data File: 2017-05-22_14-00-00_001_RTA.xls

Template: QTE-26 (rev 15) Logger Graphs Program