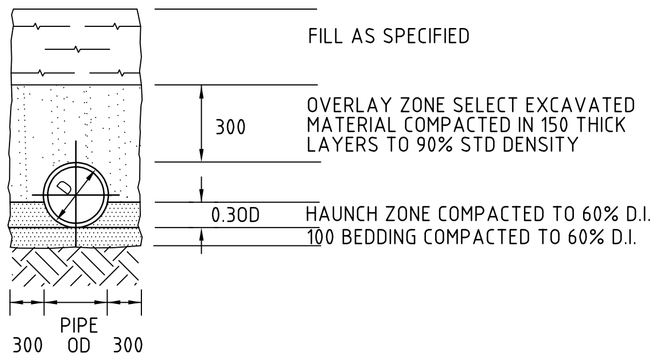

TYPE H1 SUPPORT TO
CONCRETE PIPES AT LANDSCAPED AREAS

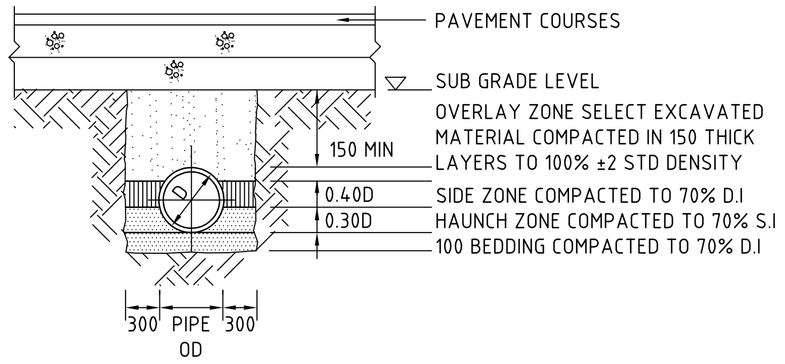

TYPE H3 SUPPORT TO
CONCRETE PIPES
UNDER PAVEMENT

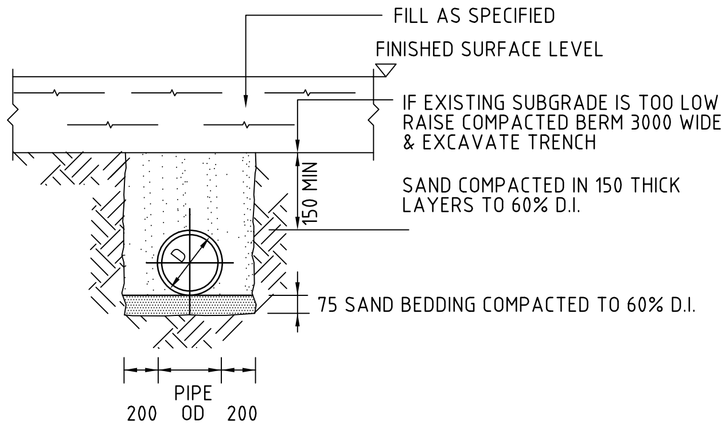

SUPPORT TO uPVC PIPES

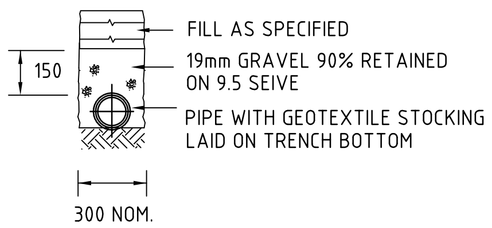

SUPPORT TO AG. DRAIN

BEDDING & HAUNCH MATERIAL GRADING	
SIEVE SIZE	WEIGHT PASSING(%)
19	100
2.36	100 TO 50
0.60	90 TO 50
0.30	60 TO 10
0.15	25 TO 0
0.075	10 TO 0

SIDE ZONE MATERIAL GRADING	
SIEVE SIZE	WEIGHT PASSING(%)
75	100
9.5	100 TO 50
2.36	100 TO 30
0.60	50 TO 15
0.075	25 TO 0

PIPE LAYING DETAILS

1:20

200mm 0 500 1000 1500 2000mm

SCALE 1:20 AT A1 SHEET SIZE

FOR DEVELOPMENT APPLICATION

AMENDMENTS	DATE	ISSUE
FOR DEVELOPMENT APPLICATION	03.07.15	C
FOR DEVELOPMENT APPLICATION	30.06.15	B
PRELIMINARY ISSUE	26.06.15	A

AMENDMENTS DATE ISSUE

CLIENT

australand

COMMERCIAL & INDUSTRIAL DIVISION
1 HOMEBUSH BAY DRIVE BUILDING C, LEVEL 3 RHODES NSW 2138
PHONE 02 8767 2000
FAX 02 8767 2008
PO BOX 3007 RHODES NSW 2138
1800 829 877

PROJECT
MARTIN BROWER FACILITY - HDBP
CNR THE HORSELY DV. & COWPASTURE RD
WETHERILL PARK, NSW

CONSULT AUSTRALIA

DESIGNED	DRAWN	DATE	CHECKED	SIZE	SCALE	CAD REF:
M.C	M.C	24.06.15	M.W	A1	AS SHOWN	CO11492.09-DA46

Costin Roe Consulting Pty Ltd.
Consulting Engineers ACN 003 696 446
Level 1, 8 Windmill Street
Walsh Bay, Sydney NSW 2000
Tel: (02) 9251-7699 Fax: (02) 9241-3731
email: mail@costinroe.com.au ©

CostinRoe Consulting
Value in Engineering and Management

DRAWING TITLE
CONCEPT STORMWATER
DRAINAGE DETAILS - SHEET 2

DRAWING No CO11492.09-DA46

ISSUE C