THIS DRAWING SHOULD NOT BE SCALED

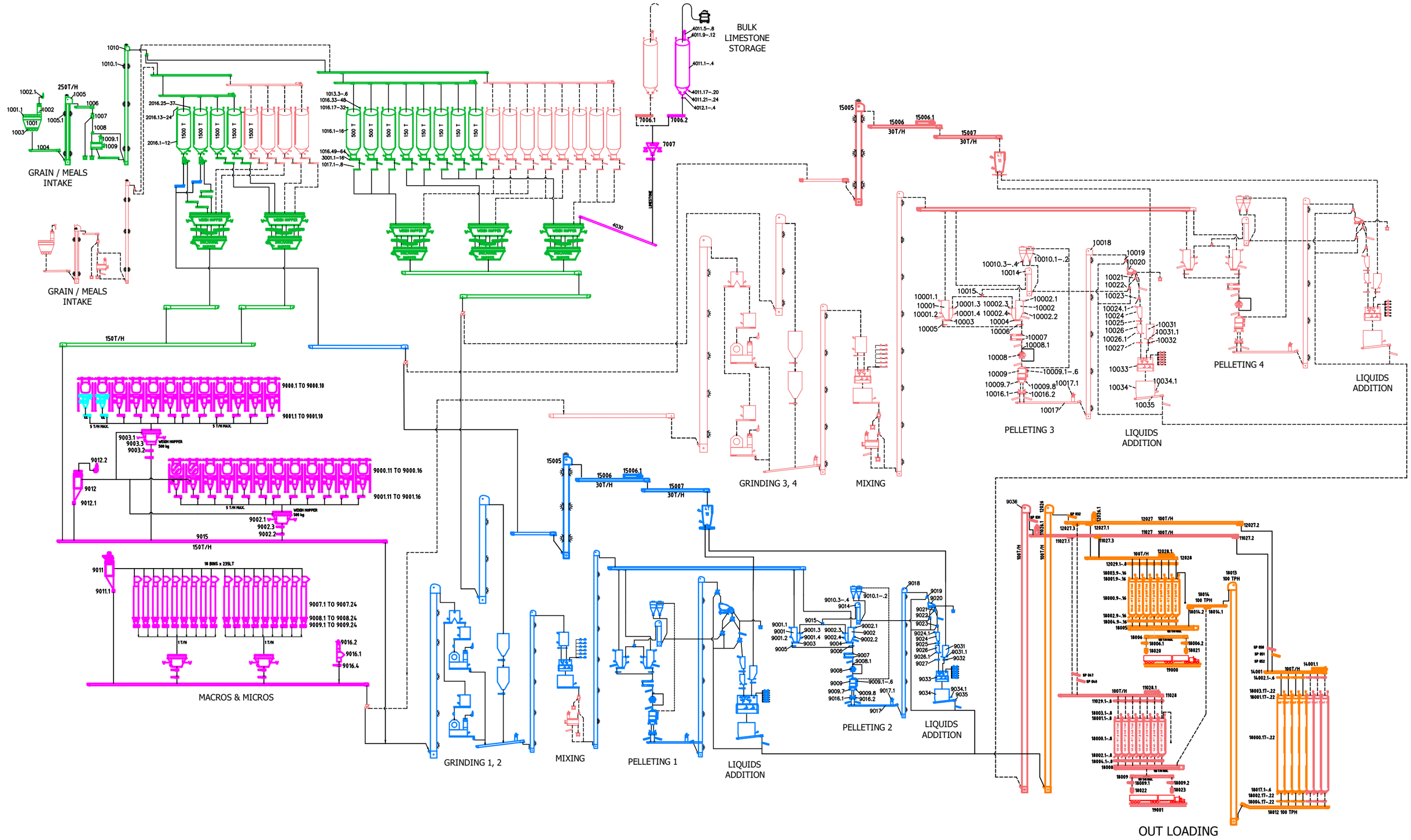

REV	DESCRIPTION	BY	CHK	APP	DATE

LGPM PROCESS INNOVATION
Bulk Materials Handling and Processing Systems
47-49 OVERSEAS DRIVE
NOBLE PARK, VIC 3174
PHONE: +61 (03) 9702 4855
EMAIL: info@lgpm.com.au
WEBSITE: www.lgpm.com.au

THIS DRAWING, ALL INFORMATION & DESIGNS HEREON, ARE THE PROPERTY OF LGPM. THIS DRAWING IS CONFIDENTIAL & MUST NOT BE MADE PUBLIC OR COPIED WITHOUT PRIOR WRITTEN AUTHORISATION FROM LGPM AND IS SUBJECT TO RETURN ON DEMAND. NO USE OF THIS DRAWING, ANY INFORMATION OR DESIGNS HEREON IS PERMITTED EXCEPT WHEN SPECIFICALLY AUTHORISED IN WRITING BY LGPM. ACCEPTANCE & POSSESSION OF THIS DRAWING CONSTITUTES FULL AGREEMENT OF THE ABOVE CONDITIONS.

DRAWN	RP	22-2-21
CHECKED		
DESIGNED		
APPROVED		
SCALE		
CAD FILE		
DRG TYPE		

CLIENT & PROJECT LOCATION:
BAIADA - TANGARATTA

TITLE:
PROPOSED GREENFEILD FEEDMILL
FOR BROILER & BREEDER FEEDS
PROCESS FLOW

PROJECT / QUOTE NUMBER	DRAWING NUMBER	SHEET No.	REVISION	SHT SIZE
9873	9873-00001	1 of 1	4	A1