SMEC

Member of the Surbana Jurong Group

SMEC INTERNAL REF. 30013038

Manildra – Port Kembla Bulk Liquid Terminal

Remedial Action Plan

Reference No. 30013038-R02

Prepared for Manildra Group Pty Ltd

27 May 2022

Document Control

Document Type	Manildra – Port Kembla Bulk Liquid Terminal
Project Title	Remedial Action Plan
Project Number	30013038
File Location	\\filer.nasuni.local\SMECANZ\Projects\300130\30013038 - Ethanol Tank Farm, Port Kembla\140 Data\Reporting\R02 Remedial Action Plan\Rev2
Revision Number	Rev 3

Revision History

Revision No.	Date	Prepared By	Reviewed By	Approved for Issue By
Rev 1	29/10/2021	Alexander Williams	N/A	N/A
Rev 2	9/05/2022	Alexander Williams	Manuel Fernandez (CEnvP SC)	Alexander Williams
Rev 3	27/05/2022	Alexander Williams	Manuel Fernandez (CEnvP SC)	Alexander Williams

Issue Register

Distribution List	Date Issued	Number of Copies
Manildra Group Pty Ltd	27/05/2022	1 PDF

SMEC Company Details

Approved by	Alexander Williams
Address	Level 2, 6-8 Regent Street, Wollongong NSW
Phone	+61 2 9900 7039
Email	alex.williams@smec.com
Website	www.smec.com
Signature	

The information within this document is and shall remain the property of:
SMEC Australia Pty Ltd

Important Notice

This report is confidential and is provided solely for the purposes of documenting a Remedial Action Plan for Part of Lot 6 DP1236743 and Part of Lot 2 DP 1182823, Foreshore Road, Port Kembla (referred to as 'the Site'). This report is provided pursuant to a Consultancy Agreement between SMEC Australia Pty Limited ("SMEC") and Manildra Group Pty Ltd under which SMEC undertook to perform a specific and limited task for Manildra Group Pty Ltd. This report is strictly limited to the matters stated in it and subject to the various assumptions, qualifications and limitations in it and does not apply by implication to other matters. SMEC makes no representation that the scope, assumptions, qualifications and exclusions set out in this report will be suitable or sufficient for other purposes nor that the content of the report covers all matters which you may regard as material for your purposes.

This report must be read as a whole. The executive summary is not a substitute for this. Any subsequent report must be read in conjunction with this report.

The report supersedes all previous draft or interim reports, whether written or presented orally, before the date of this report. This report has not and will not be updated for events or transactions occurring after the date of the report or any other matters which might have a material effect on its contents, or which come to light after the date of the report. SMEC is not obliged to inform you of any such event, transaction or matter nor to update the report for anything that occurs, or of which SMEC becomes aware, after the date of this report.

Unless expressly agreed otherwise in writing, SMEC does not accept a duty of care or any other legal responsibility whatsoever in relation to this report, or any related enquiries, advice or other work, nor does SMEC make any representation in connection with this report, to any person other than Manildra Group Pty Ltd. Any other person who receives a draft or a copy of this report (or any part of it) or discusses it (or any part of it) or any related matter with SMEC, does so on the basis that he or she acknowledges and accepts that he or she may not rely on this report nor on any related information or advice given by SMEC for any purpose whatsoever.

The findings of this this report are the result of methodologies used in accordance with normal practices and standards. We consider that they represent a reasonable interpretation of the general conditions of the Site at the time they were assessed and at the time of writing this report, but under no circumstances, can it be considered that these findings represent the actual state of the Site in all areas.

In preparing this report, current guidelines for assessment and management of contaminated land were followed. This work has been conducted in good faith in accordance with SMECs understanding of the client's brief and general accepted practice for environmental consulting.

Table of Contents

1 Introduction 1

1.1 General 1

1.2 Background 1

1.3 Proposed development 2

1.4 Project objectives 3

1.5 Scope of work 4

2 Site information 5

2.1 Site identification and description 5

2.2 Previous reports 7

2.3 Site information 7

2.4 Site history summary 9

2.5 Site observations 10

2.6 Groundwater wells 17

3 Site characterisation 18

3.1 Areas of Environmental Concern 18

3.2 Site investigations 18

3.3 Subsurface conditions 18

3.4 Soil results 20

3.5 Groundwater 21

4 Conceptual site model 23

4.1 Overview 23

4.2 Contamination sources 23

4.3 Exposure pathways 25

4.4 Potential receptors 25

4.5 Source pathway receptor linkages 25

5 Remedial Action Plan 27

5.1 Remediation goal 27

5.2 Actions required 27

5.3 Remedial options review 28

6 Additional investigations 31

7 Remediation works 32

7.1 Overview 32

7.2 Roles and responsibilities ... 32
7.3 Approvals, notifications, and licences ... 34
7.4 Site set up and controls ... 34
7.5 Asbestos removal ... 34
7.6 Contamination management during earthworks activities ... 35
7.7 Offsite disposal (Asbestos waste) ... 40
7.8 Water in excavations ... 40
7.9 Excavation backfilling (as required) ... 41
7.10 Unexpected finds ... 41
7.11 Contingency plan ... 41
7.12 Remediation schedule ... 41
8 Validation Plan ... 42
8.1 Data Quality Objectives ... 42
8.2 Remediation criteria ... 43
8.3 Validation Plan ... 45
8.4 Validation Report ... 46
8.5 Long term Environmental Management Plan ... 47
9 Site management requirements ... 48
9.1 Site management ... 48
10 Work Health and Safety ... 54
10.1 Work health and safety requirements ... 54
10.2 Hazard assessment ... 54
10.3 Training 55
10.4 Personal protective equipment ... 55
11 Conclusions ... 57
12 References ... 58

Appendices

Appendix A Site Figures
Appendix B Previous Results
Appendix C Engineering Logs
Appendix D Proposed design drawings
Appendix E Unexpected Finds Protocol
Appendix F Containment area calculations
Appendix G Data Quality Indicators

List of Tables (in text)

Table 1-1 Summary of issues required by SEARs 1
Table 2-1 Summary of Site information 5
Table 2-2 Site information 7
Table 2-3 Summary of asbestos observations and removal status 12
Table 2-4 Summary of groundwater wells onsite 17
Table 3-1 General Summary of Subsurface Conditions – Main terminal 19
Table 3-2 General Summary of Subsurface Conditions – Pipeline route 19
Table 4-1 Areas of environmental concern 24
Table 5-1 Remediation Options Evaluation 29
Table 6-1 Summary of proposed additional laboratory testing 31
Table 7-1 Roles and Responsibilities 32
Table 8-1 Remediation Criteria 45
Table 8-2 Validation Sampling Methodology 46

List of Figures (in text)

Figure 1-1 Bulk earthworks plan (Drawing ref: 20399-SK108_B, dated 31.08.21 prepared by TFA Group Pty Ltd) 3
Figure 2-1 Site portions for description purposes – Main terminal 6
Figure 2-2 Extract from historical Contamination Assessment (CMPS&F, 1996) 10
Figure 9-1 Indicative materials transport via Foreshore Road between Pipeline route and Main Terminal 51

Executive Summary

Manildra Group Pty Ltd (Manildra) is proposing to construct an ethanol storage facility and pipeline located on Part of Lot 6 DP1236743 and Part of Lot 2 DP 1182823, Foreshore Road, Port Kembla (herein known as 'the Site').

This report presents the Remedial Action Plan (RAP) prepared by SMEC Australia Pty Ltd (SMEC) in support of the State Significant Development application for the proposed redevelopment of Manildra - Port Kembla Bulk Liquid Terminal. This report is written to address the Secretary Environmental Assessment Requirements (SEARs) and specifically to provide advice for the proposed earthworks activities at the Site during construction. The Site is currently leased by Manildra from NSW Ports.

SMEC has previously undertaken investigations at the Site to fulfil the planning process and requirements of NSW Ports Development Code, pertaining to contamination assessment information for the proposed design. The contamination assessment was also undertaken for due diligence to provide a baseline condition assessment as part of lease documentation provided to NSW Ports. The findings of previous investigations identified soil contamination in the form of asbestos, heavy metals and polycyclic aromatic hydrocarbons within fill materials which have potential to pose risk to human health and ecological receptors during construction stage.

SMEC has prepared this RAP based on the findings of previous investigations noting not all areas of the Site could be assessed due to access. An additional stage of detailed site investigation remains to be completed within the eastern portion of the Site's main terminal once a sandstone stockpile is removed (expected June 2022).

The remediation goal is to manage pre-existing soil contaminant concentrations at the Site being leased such that redevelopment construction activities do not cause or further exacerbate contamination and that the Site:

- May be assessed to be suitable for its intended leased purpose (i.e. commercial/ industrial ethanol storage facility and pipeline route)
- Does not pose an unacceptable risk to human health.

The RAP includes:

- A summary of the Site conditions and surrounding environment
- A summary of previous investigations
- Site Characterisation
- A Conceptual Site Model
- Remediation objectives
- Extent of remediation required
- Remedial options and preferred approach
- Additional investigations
- Remedial/management activities
- Contingency measures
- Validation requirements
- Environmental safeguards required to complete the remediation in an environmentally acceptable manner
- Workplace health and safety requirements.

Whilst the RAP provides an outline of the remedial requirements, it should be noted that this document is not a specification.

The remediation options analysis identified that on-site containment and a long-term management strategy is a practical and cost-effective remedial option to address Site contamination encountered/disturbed during redevelopment of the Site. This was driven by the expected volume of ground disturbance, availability of fill areas within the redevelopment design earthworks levels and ongoing commercial industrial land use which would normally facilitate long-term environmental management measures.

Remediation works will involve the following general activities:

- Set up Site controls

- Surface asbestos removal
- Contamination management during earthworks activities including:
- Deep and/or localised excavations (i.e. stormwater features and pipework, other structural footings and/or foundations such as retaining walls)
- Shallow widespread earthworks (Site recontouring as 'cut to fill')
- Onsite containment of contaminated soils
- Validation screening of excavated spoil to confirm suitability for onsite reuse (either restricted or unrestricted)
- Offsite disposal of asbestos wastes to a suitably licensed facility
- Preparing a validation report and long-term Environmental Management Plan (LTEMP).

Based on preliminary discussions with Manildra, four potential onsite containment areas have been identified noting these are required to be confirmed based on design requirements. Preliminary considerations on the design requirements of onsite containment areas include recommendations for minimum capping profile requirements and accessibility to buried utilities.

Groundwater remediation options are beyond the scope of this RAP. A standalone Groundwater Assessment and Management Report has been prepared to address SEARs pertaining to groundwater (SMEC, 2022c). Based on current DSI findings and due to limited groundwater interactions expected during the proposed development, remediation/management measures for groundwater contamination is not warranted.

SMEC considers the Site can be made suitable for the proposed development if the RAP is implemented. Subject to successful validation, restrictions would only apply to onsite containment areas of the Site if remediation is carried out as per the RAP and the contamination sources and extents are as per the current conceptual site model. Restrictions and ongoing management measures would be documented within a Long-Term Environmental Management Plan.

Abbreviations

Abbreviation / Acronym	Description
ACM	Asbestos containing material
AEC	Area of environmental concern
AHD	Australian Height Datum
ARCP	Asbestos Removal Control Plan
ASLP	Australian standard leaching procedure
ASSMP	Acids sulfate soils management plan
BTEX	Benzene, toluene, ethylbenzene and xylenes
CEMP	Construction Environmental Management Plan
CoPC	Contaminants of Potential Concern
CoC	Chain of Custody
CSM	Conceptual Site model
CT	Contaminant threshold
DQI	Data Quality Indicators
DQO	Data Quality Objectives
DSI	Detailed Site investigation
EC	Electrical Conductivity
EIL / ESL	Ecological investigation / screening level
EPA	Environment Protection Authority
EPL	Environment Protection Licence
HIL / HSL	Health investigation / screening level
LCS	Laboratory Control Sample
LNAPL	Light non-aqueous phase liquid
LOR	Limit of reporting
LTEMP	Long-term Environmental Management Plan
m	Metres
m bgl	Metres below ground level
m BTOC	Metres below top of casing
mg/kg	Milligrams per kilogram
ML	Megalitres
µS/cm	micro siemens per centimetre
NEPC	National Environment Protection Council
NEPM	National Environment Protection (Assessment of Site Contamination) Measure
OCP	Organochlorine pesticides
OPP	Organophosphorus pesticides
PAH	Polycyclic Aromatic Hydrocarbons
PCB	Polychlorinated biphenyls
PID	Photoionisation detector

Abbreviation / Acronym	Description
POEO Act	Protection of the Environment Operations Act
PPE	Personal protective equipment
PSI	Preliminary Site Investigation
RAP	Remedial Action Plan
RPD	Relative percent difference
SCC	Specific contaminant concentration
SOP	Standard Operating Procedure
SRA	Sample Receipt Advice
SWL	Standing Water Level
SWMS	Safe work method statement
TEQ	Toxic Equivalency Quotient
TRH	Total recoverable hydrocarbons
TPH	Total Petroleum Hydrocarbons
VHC	Volatile halogenated compounds
UCL	Upper confidence limit
VENM	Virgin excavated natural material

1 Introduction

1.1 General

Manildra Group Pty Ltd (Manildra) is proposing to construct an ethanol storage facility and pipeline located on Part of Lot 6 DP1236743 and Part of Lot 2 DP 1182823, Foreshore Road, Port Kembla (herein known as 'the Site'). The Site locality and layout is shown on Figure 1 and Figure 2, Appendix A.

This report presents the Remedial Action Plan (RAP) prepared by SMEC Australia Pty Ltd (SMEC) in support of the State Significant Development application for the proposed redevelopment of Manildra - Port Kembla Bulk Liquid Terminal. This report is written to address the Secretary Environmental Assessment Requirements (SEARs) and specifically to provide advice for the proposed earthworks activities at the Site during construction. The Site is currently leased by Manildra from NSW Ports (Part of Lot 6 only), with proposed lease along pipeline route to be arranged. The scope of works was carried out in general accordance with SMEC's Fee Proposal (ref: 1042321-P01 Rev1 dated 15/09/2021) and subsequent variation (ref: 30013038-V04 Rev 1 dated 16/02/2022).

1.2 Background

SMEC has previously undertaken investigations at two portions of the Site (identified herein as the 'main terminal' and 'pipeline route') to fulfil the planning process and requirements of NSW Ports Development Code, pertaining to contamination assessment information for the proposed design. These include:

- Detailed Site Investigation (main terminal) in December 2021 (SMEC, 2021b, ref: 30013038-R04)
- Targeted Site Investigation (pipeline route) in April 2022 (SMEC, 2022, ref: 30013038-R05)

The contamination assessments were also undertaken for due diligence to provide a baseline condition assessment as part of lease documentation provided to NSW Ports. The findings of the investigations identified soil contamination in the form of asbestos, heavy metals and polycyclic aromatic hydrocarbons (PAHs) within fill material which have potential to pose risk to human health and ecological receptors during construction stage.

SMEC (2021b) previously made recommendations including, but not limited to, the following:

- Additional contamination investigation to supplement existing data and allow characterisation of the Site as a whole (noting inaccessible areas due to a large rock stockpile)
- Preparation of remedial action plan (RAP) outlining remediation and management strategies to manage risks posed to human health and ecological receptors during the Site development.

The Planning Secretary's Environmental Assessment Requirements (SEARS) were issued on 23 December 2021. The SEARs have identified several key issues pertaining to soils and contamination which are outlined in Table 1-1. This RAP was written to address the Secretary Environmental Assessment Requirements (SEARs) and specifically to provide advice for the proposed earthworks activities at the Site during construction.

Manildra are also required to comply with relevant environmental obligations outlined within the lease agreement with NSW Ports and requirements of NSW Ports Development Code.

Table 1-1 Summary of issues required by SEARs

Item	Key Issues required by SEARS	Where addressed
19	Contamination – a site contamination assessment in accordance with the Managing Land Contamination Planning Guidelines: SEPP 55 – Remediation of Land (DUAP, 1998), including:	
19.1	characterisation of the nature and extent of any contamination on the site and surrounding area	SMEC (2021a, 2021b and 2022)
19.2	a Remedial Action Plan.	This report

1.3 Proposed development

1.3.1 Main terminal

Manildra propose to lease and redevelop the Site into an ethanol storage facility. Based on information provided by Manildra, the proposed development is expected to comprise:

- Six above ground storage tanks (2.5ML to 5ML capacity for beverage grade alcohol) located inside a raised bunded area, plus two slops tanks
- Demolition of existing bridge and construction of one new proposed bridge crossing over the adjacent stormwater channel to the west, to connect to a service road with Foreshore Road
- A gravity retaining wall installed along the boundary with the stormwater channel (approx. 295m2) including either side of the proposed bridge. A second possible gravity retaining wall will be installed along the western Site boundary adjacent to the adjoining sewer pump station (offsite)
- New stormwater network including pipework, underground storage tank, two stormwater treatment devices and outlet structures
- Perimeter roadways/pavements
- Firefighting system including foam suppressant system and water supply tanks
- Ancillary features such as substation, workshop and sheds which would be small and single storey.

Figure 2, Appendix A shows the approximate position of proposed Site development features relative to the Site boundaries.

Appendix D includes a copy of the Site plan drawings showing the proposed layout of the development relative to the Site boundaries. Manildra supplied SMEC with a current set of 'tender only' design drawings (20399-C00 to C17, C20 and C21, dated 22/11/2021) prepared by TFA Group Pty Ltd. Relevant details pertaining to earthworks activities are summarised below:

- Site grading and drainage plan (20399-C02 & C03) – A network of proposed stormwater pipework will be installed within linear trenches excavated beneath the ground surface (approximately 0.5m wide by 1m deep). Localised deep excavations are expected for two stormwater treatment devices (estimated 2.5m x 2.5m x 2m deep) will be installed prior to discharge outlets, and an underground storage tank (8m length x 3m diameter) will be installed near the entrance noting depths are expected to be approximately 4.5m below the existing ground level (refer to Figure 5, Appendix A). An open diversion swale would be constructed west of the proposed service road (minimum depth 0.4m deep, including gravel).
- Site pavement plan (20399-C11 and C12) – The Site will comprise mostly paved surfaces including vehicle pavements (heavy and light), structural slabs and bund flooring, spray seal driveway/road, and gravel hardstand layer across the remaining areas of the Site. A narrow strip of land will comprise a landscaped area (approx. 700m^2) along the southern boundary of the Site adjacent to Foreshore Road.
- Site retaining wall plan (20399-C20 & C21) – A gravity retaining wall will be installed along the boundary with the stormwater channel (approx. 220m length) including either side of the proposed bridge and adjacent to the adjoining sewage pumping station lot (refer to Figure 5, Appendix A). Gravity retaining walls will involve linear trench excavation of concrete footing with dimensions (continuous approximately 1.3m wide by 1.0m depth below existing ground level, with multiple concrete backhoe piers 0.45m wide by 2.0m depth below existing ground level).
- Bulk earthworks plan (20399-C07) – Site recontouring will require bulk earthworks activities involving cut (approx. 2,400m^3) and fill (approx. 3,400m^3) with the 1,000m^3 balance to be sourced as imported fill or locally site-won from existing stockpiled material. On the western side of the stormwater channel, earthworks will include shallow 'cut' to 'fill' across the width of the service road portion, a proposed diversion swale and harbour foreshore access ramp, without disturbing remaining unoccupied areas within the Site. Figure 1-1 below shows the approximate layout cut (red) to fill (green).

SMEC understand that timber driven piles will be used for foundations of the tank structures. Except for minor disturbances at the surface, these are expected to result in minimal ground disturbance as soils are displaced laterally to accommodate the pile.

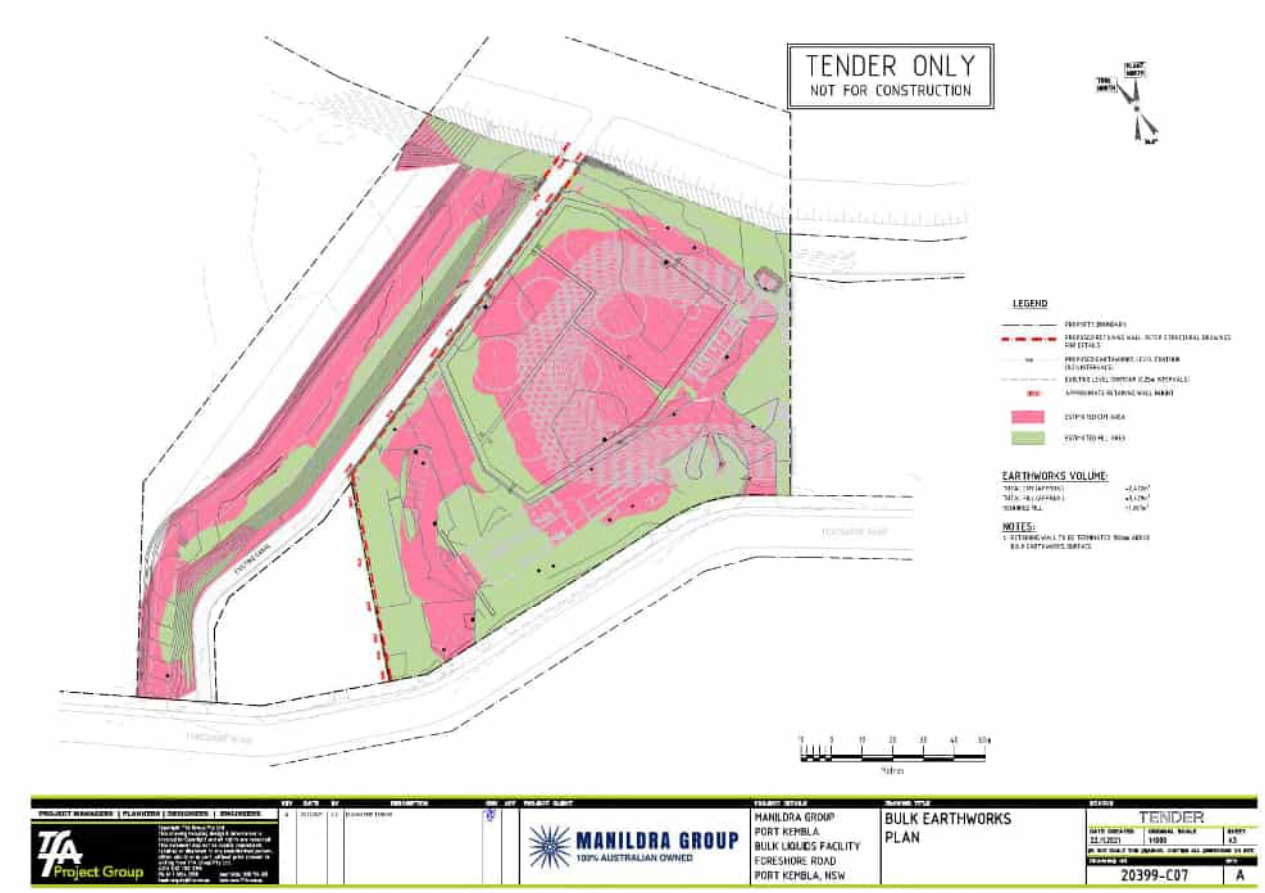

Figure 1-1 Bulk earthworks plan (Drawing ref: 20399-SK108_B, dated 31.08.21 prepared by TFA Group Pty Ltd)

1.3.2 Pipeline route

The Site boundary extends to the east of the main terminal along a 4m wide easement for construction of a new pipeline route connecting to existing Jetty No. 4, including a parcel of land within Part of Lot 2 DP 1182823 owned by Transport for NSW (TfNSW).

Appendix D includes a copy of the Site plan showing the proposed layout of the development relative to the Site boundaries. Based on the current set of design drawings (20399-DA-P01 to P05, dated 10 March 2022) prepared by TFA Group Pty Ltd., the pipeline route would consist of:

- Approximately 180m above-ground pipeline mounted on footings between the main terminal (Chainage 0m) and a dive thrust block (Chainage 180m). Along this portion, shallow foundation excavations are anticipated to be 1.0m deep (each 0.4m wide x 1.0m length) at regular intervals (roughly every 5-6m spacing);
- Approximately 280m underground pipeline between dive thrust block (Chainage 180m) and Jetty No. 4 (Chainage 460m) – Trench excavations are anticipated to be 1.8m deep by 2.0m wide. Installation is expected to involve 'cut and cover' trenches reusing materials excavated during backfill (minimum 1.2m compacted backfill) and removal of surplus spoil material for reuse/containment within main terminal.

Figure 2, Appendix A shows the proposed layout of the pipeline route (including marking of Chainage 0 to 460m) relative to the Site boundaries.

1.4 Project objectives

The overall objectives of the RAP are to:

- Set remediation objectives

- Document the process to remediate/manage the identified soil contamination as part of the bulk earthworks (only within the areas of the Site that will be disturbed by the development) to make the Site suitable for the proposed development so that it does not present an unacceptable risk to human health.

The objectives above have been set in discussions with Manildra and subject to review and consultation with NSW Ports as the landowner.

Further updates to the RAP may occur subject to the findings of additional investigation beneath the stockpile, finalisation of design, construction planning and/or NSW EPA consent conditions.

1.5 Scope of work

The RAP includes:

- A summary of the Site conditions and surrounding environment
- A summary of previous investigations
- Site Characterisation
- A Conceptual Site Model (CSM)
- Remediation objectives
- Extent of remediation required
- Remedial options and preferred approach
- Additional investigations
- Remedial/management activities
- Contingency measures
- Validation requirements
- Environmental safeguards required to complete the remediation in an environmentally acceptable manner
- Workplace health and safety requirements

Whilst the RAP provides an outline of the remedial requirements, it should be noted that this document is not a specification.

2 Site information

2.1 Site identification and description

The proposed development is located at Part of Lot 6 DP1236743 and Part of Lot 2 DP 1182823, located on Foreshore Road in Port Kembla, NSW. The Site consists of two portions identified as main terminal and pipeline route as shown on Figure 2, Appendix A.

Figure 1 and Figure 2, Appendix A show the Site locality and Site layout, respectively.

A summary of Site information is presented below in Table 2-1.

Table 2-1 Summary of Site information

Aspect	Details
Title identifier	Part of Lot 6 DP1236743 and Part of Lot 2 DP 1182823 (pipeline route only)
Address	Foreshore Road, Port Kembla NSW
Area	Main terminal Manildra supplied drawings showing a Site area of approximately 2.3ha (which excludes the stormwater channel). It is noted that the stormwater channel (approx. 0.14ha) is excluded from the lease. For Site description purposes, the Site has been divided into the three portions shown below on Figure 2-1 including: • Western portion – Areas west of the stormwater channel (0.83ha) • Central portion – A centrally located area east of the stormwater channel (0.44 ha) differentiated by a historical property boundary • Eastern portion – An easterly located area east of the stormwater channel (1.02 ha) Pipeline route Manildra supplied drawings showing a proposed linear pipeline route of approximately 460m between the main terminal and Jetty No. 4 west to east with a 4m corridor along the route. The pipeline route occupies an area of approximately 0.18 ha.
Zoning	The Site is located within Port Kembla state significant precinct in NSW. The State Environmental Planning Policy (Three Ports) 2013 is the principal environmental planning instrument applying to the Site.
Current Land use	Main terminal The main terminal part of the Site currently consists of vacant industrial land previously used for storage of miscellaneous maritime/port equipment. An open concrete lined stormwater channel passes through the Site, which discharges to the Port Kembla Outer Harbour immediately north of the Site (but does not form part of the lease area). A relatively large crushed or coarse fill stockpile up to about 11m high above current land platform level currently occupies most of the eastern portion of the Site. The coarse fill stockpile appears to comprise largely coarse sandstone boulders up to about 1m diameter. Pipeline route The pipeline route part of the Site is currently unused part of industrial foreshore land in the vicinity of harbour jetty operations.
Proposed land use	The proposed land use is for a bulk liquid (beverage grade ethanol) storage facility and product pipeline route as described in Section 1.3.
Surrounding land use	Main terminal The Site is presently surrounded by: • Remaining NSW Ports foreshore land on Lot 6 (west) currently containing several large soil stockpiles • Foreshore Road (south), then beyond this and further south various industrial facilities including: - Ixom (sulfuric acid plant)

Aspect	Details
	- Cleanaway waste recycling facility - Morgan Cement International Pty Ltd (cement manufacturing and grinding facility). • Other former industrial facilities such as the former copper smelter and fertiliser production facilities • Remaining stockpiled material and vacant land on Lot 6 (east) • Port Kembla Outer Harbour shoreline (north). Pipeline route The Site is surrounded by: • Vacant foreshore land, a sandstone stockpile and paved road to former jetty No. 3 on Part of Lot 6 • Vacant foreshore land, training conference centres, marine compounds/equipment stores and paved road/carparking areas on Part of Lot 2 • An acid production pipeline route bisects the Site (Chainage 390m) and diverts in similar alignment towards Jetty No. 4 (Chainage 390m to 460m) • Port Kembla Outer Harbour shoreline is north approximately between 5m and 25m from the centreline of the pipeline route.

Figure 2-1 Site portions for description purposes – Main terminal

2.2 Previous reports

Background information contained in this RAP was sourced from the following previous reports:

- SMEC Australia Pty Ltd (2021a) Preliminary Geotechnical and Contamination Investigation, Part of Lot 6 DP1236743 Foreshore Road, Port Kembla, prepared for Manildra Group Pty Ltd, Ref: 30013038-R01, Revision 2, dated 05 May 2021
- SMEC Australia Pty Ltd (2021b) Detailed Site Investigation, Part of Lot 6 DP1236743 Foreshore Road, Port Kembla, prepared for Manildra Group Pty Ltd, ref: 30013038-R04, Revision 1, dated 22 December 2021
- SMEC Australia Pty Ltd (2022) Targeted Site Investigation – Pipeline Route, Part of Lot 6 DP1236743 and Part of Part of Lot 2 DP 1182823, Foreshore Road, Port Kembla, prepared for Manildra Group Pty Ltd, ref: 30013038-R05, Revision 1, dated 02 May 2022

A summary of relevant information from this report is included in this RAP. SMEC (2021a) also previously undertook a review of several environmental reports pertaining to the Site and nearby surrounding areas. Reference should be made to the original reports for further detailed information.

2.3 Site information

Relevant Site information is summarised in Table 2-2 below.

Table 2-2 Site information

Aspect	Description
Topography	Main terminal The Site terrain appears to have been filled and levelled with a surface elevation between 3.5-4.5m AHD. The Site surface is predominantly hardstand granulated slag material except for a concrete slab present in the central portion of the Site, and some localised grassed terrain. Other features of the Site include: • A large rock stockpile with steep batters (to a height of approximately +14m AHD) within the eastern portion • East and west of the channel there are localised steep slopes down to the edges of the concrete lined stormwater channel (approximately +2m AHD) • A fill embankment is noted west of the stormwater channel approximately 1.5m to 2m above top of the stormwater channel, indicating the Site terrain appears to have been filled and levelled. Pipeline route Based on survey carried out by Masters Surveying (Drawing 64146-2), the Site is relatively flat with some slight undulations at elevations ranging between 2.9m AHD (Chainage 90) and 4.3m AHD (Chainage 340m).
Vegetation	Main terminal The Site contains a stand of mature trees on the southern Site boundary adjacent to Foreshore Road. Sparsely scattered trees were noted elsewhere, noting most of the Site is hardstand gravel and pavements with some patches of exotic grass vegetation. Pipeline route Except some minor areas of grass coverage, the Site is mainly hardstand gravel and pavements with little or no vegetation.
Geology	The 1:100,000 scale geological series sheet of Wollongong to Port Hacking indicates that the Site is underlain by Quaternary quartz and lithic fluvial sand, silt and clay which most likely will overlay either or both the rock formations of: • The Dapto Latite Member, comprising of a melanocratic coarse grained to porphyritic latite • The Budgong Sandstone formation, comprising red-brown and grey volcanic sandstones. Reference to previous drilling in the area of Port Kembla Outer Harbour indicates that the Site is likely underlain by the Budgong Sandstone Formation. However, the Site is also located very close to the boundary between the overlying Dapto Latite and it is possible that some Dapto Latite could be encountered in some parts of this Site particularly towards the southern portion of the Site.

Aspect	Description
Soil Landscape	Reference to the 1:100,000 Soil Landscape Series Sheet for Central and Eastern NSW (OEH 2019) indicates the Site is within the disturbed terrain soil landscape.
Acid Sulfate Soil	Reference to ASS risk mapping (NSW Government eSPADE, accessed 23/03/2021) indicates that the Site is located within areas mapped as 'disturbed terrain' with an unknown probability of ASS occurrence. Risk map guidance indicates *that 'disturbed terrain may include filled areas, which often occur during reclamation of low-lying swamps for urban development. Other disturbed terrain includes areas which have been mined or dredged or have undergone heavy development or construction of dams or levees. Soil investigations are required to assess these areas for acid sulfate potential.'* Figure 3, Appendix A shows the acid sulfate soils risk mapping for the Site and surrounding areas. The map indicates the following: Main terminal • The Site western, central and eastern portion is primarily underlain by disturbed terrain (X) at an elevation (2) of 2 to 4m AHD • A relatively smaller northern portion of the Site identifies disturbed terrain (X) at an elevation (1) of 1 to 2m AHD. From preliminary investigation by SMEC (2021a), acid sulfate soils were assessed to be present at the main terminal portion of the Site within relatively thin layers of natural estuarine soils beneath the fill. Further consideration and management of acid sulfate soils was recommended where these soils are to be intersected via excavation or if dewatering will occur which could lower the water table and expose soils to oxidation. Pipeline route • Between Chainage 0 to 180m, the Site is underlain by disturbed terrain (X) at an elevation (2) of 2 to 4m AHD • Between Chainage 180 to 430m, the Site is underlain by disturbed terrain (X) at an elevation (2) of greater than 4m AHD. Based on the Site topography and proposed disturbance depths (refer to Section 1.3), excavations depths were assessed as: • Base level 1.9 to 2.6m AHD (Above ground section of pipeline route - Shallow concrete footings, approximately 1m deep) • Base level 2.3 to 3.3m AHD (Underground section of pipeline route – Cut and cover trenching, approximately 1.8m deep). At these earthworks' levels, acid sulfate soils (if present) within the Site area were assessed to be greater than the depth of proposed disturbance.
Groundwater	Main terminal Based on previous groundwater monitoring that has occurred at the Site, groundwater depths beneath the Site were historically recorded typically between 1.5m and 3.0m below ground surface with an inferred groundwater flow in a north-easterly direction towards Port Kembla Outer Harbour. Groundwater depths and directions may vary based on Site specific conditions, including tidal influences. A search of the Department of Water and Energy Online Database [accessed 22 March 2021] was carried out to identify registered groundwater bores within the vicinity of the Site. The search indicated multiple registered bores are within industrial properties for monitoring purposes located within 500m of the Site including: • One registered bore (GW114085) located 100m south of the Site (within Morgan Cement International property) • Greater than 50 registered bores between 300m and 600m south of the Site (former Port Kembla Copper Smelter) • Six registered bores 450m south-east of the Site (Vesuvius manufacturing facility. Pipeline route Based on Site topography, the depth of groundwater along the pipeline route is expected to be at depths between 2-3m below ground level based on the proximity to the open harbour environment. Groundwater within the Site area is assessed to be greater than the depth of proposed disturbance.

Aspect	Description
Surface Water	Main terminal Surface water at the main terminal Site is likely to infiltrate into Site soils or shed as runoff partly to Foreshore Road (south), partly to Port Kembla harbour (north) and partly into the adjacent open concrete lined drain (west). The open drain receives stormwater from upslope areas offsite and runs through the Ixom sulfuric acid plant as an open drain, and underground beyond, including through the former copper smelter land further upslope. Pipeline route Surface water runoff from the Site (pipeline route) is likely to shed from hardstand areas directly towards Port Kembla harbour. At asphalt paved areas (Chainage 320 to 460m), surface water runoff is expected to enter urban stormwater drainage pits and pipework prior to discharge at the harbour.

2.4 Site history summary

SMEC (2021a, 2021b and 2022) presented the following summary of the site history based on desktop information reviewed at the time.

Onsite – Main terminal

Pre 1938, the Site was likely a former estuarine beach/lagoon environment and part of Tom Thumb lagoon. In 1923, it is understood that the Site was purchased to permit construction of break wall and extensions associated with creation of Port Kembla Harbour. Based on aerial photographs, it appears that land reclamation may have commenced sometime between 1948 and 1961, during which time an open stormwater drain which runs through the Site was straightened and concrete lined (as per current alignment). Further filling occurred post 1961 and 1977 associated with harbour front land reclamation.

Prior to 1977, development activities had commenced at the Site, including operation of a former Franke scrap metal yard and a former quarantine facility on open concrete slab (central portion) and timber sale yard (eastern portion), noting remaining areas appeared unused.

Since 1993, the central portion appeared to continue to be used for various equipment laydown yards until present. In 2001, a small bridge was installed in the north of the Site over the open drain. Additional filling of coalwash and granulated slag materials occurred in the western and eastern portion of the Site and then used for bulk storage of steel until 2011. Once vacant, the western portion of the Site appeared to be used for temporary stockpiles, and a large stockpile of sandstone rock materials appeared in the eastern portion (circa 2014 to present).

During a previous 'baseline' contamination assessment carried out by CMPS&F Environmental (October 1994), it was noted that the western portion of the Site included a part of Lot 6 which was identified by Illawarra Port Authority as a known contaminated area. Anecdotal information reported that 'wastes containing tars' were dumped there and contamination investigations were carried out by Biological and Chemical Analytical Services (University of Wollongong, 1991 - report not available) to assess the extent of contamination (identified as 'Known PAH site contamination area' on Figure 2-2. Following assessment, the report indicated that contamination remains in-situ beneath a capping material that was placed. The inferred area appears to overlap the Site south-western corner as shown on Figure 1 and Figure 4, Appendix A.

Onsite – Pipeline route

Pre 1938, the land along the pipeline route was partly within a former estuarine beach/lagoon environment and partly reclaimed land associated with former No. 4 Jetty (originally built 1908), noting two former building structures were present (Chainage 300 to 350m). In the 1948-1951 aerial photograph, the Site appears to have been filled during land reclamation, construction of No. 3 Jetty and No. 4 Jetty (reconstructed, new alignment) and associated railway lines. Several building structures were constructed at the Site and Jetty operations appear to have occurred between the 1960s to 1990s, at which point railway line activities ceased. Progressive demolition of building structures appears to have occurred in early 1990s and 2000s, prior to construction of the existing buildings at the Site.

Offsite

Land surrounding Port Kembla harbour has a history of heavy industrial activities, originally commencing with coal export and later expanding to copper smelting, steel making, acid/fertiliser production, metal manufacturing and ancillary industries. A coke works was located to the south-east of the Site (operated from about 1899-1926). Since

1948/1951, nearby industrial activities opposite side of Foreshore Road upslope of the Site appear to have commenced including but not limited to an acid production plant, fertiliser manufacturing and copper smelter (within 50m-300m of the Site).

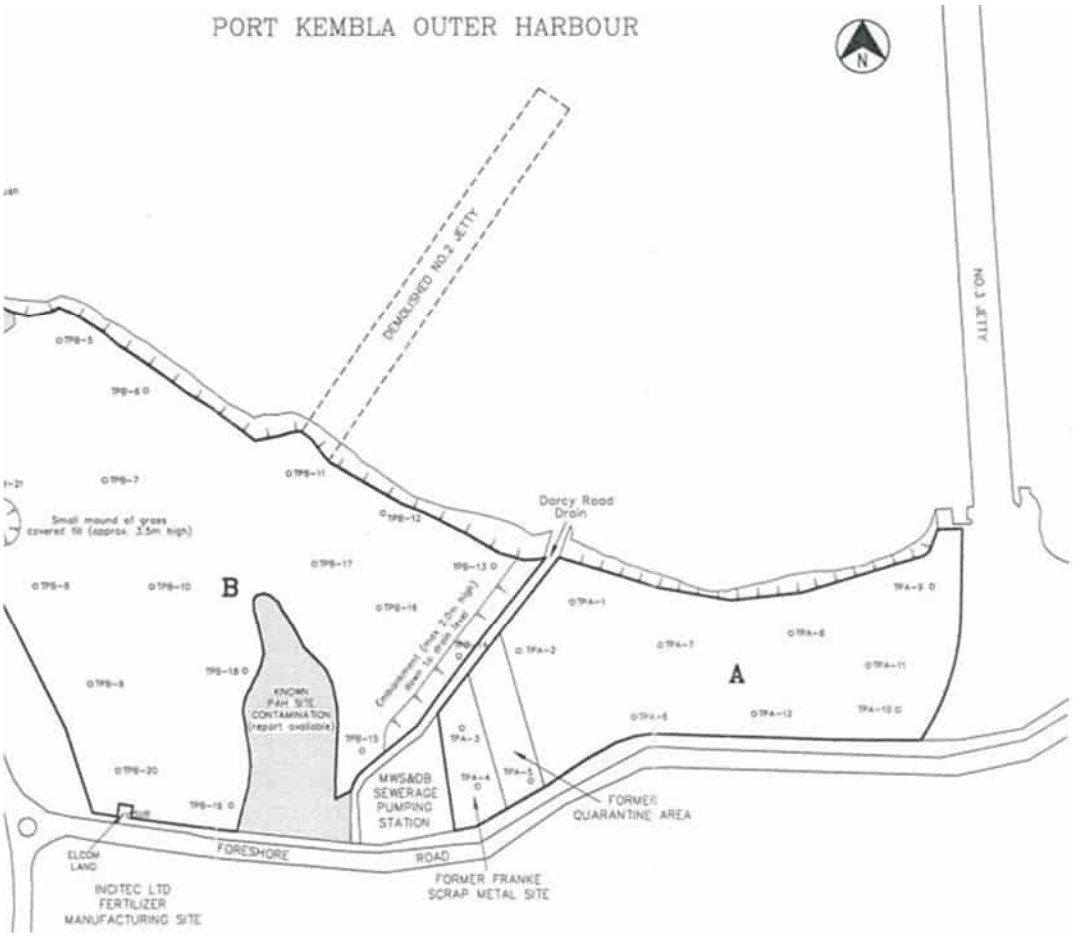

Figure 2-2 Extract from historical Contamination Assessment (CMPS&F, 1996)

2.5 Site observations

SMEC (2021a, 2021b and 2022) presented a summary of the Site conditions based on observations made at the time. During multiple investigation stages between March 2021 and April 2022, an Associate Environmental Engineer from SMEC visited the Site to identify potentially contaminating activities or previous land uses. Selected photos from the Site visit are included in Photo 2-1 to Photo 2-21 below. Site features are shown on Figure 2, Appendix A.

The following relevant Site observations were made:

Main terminal

- A concrete lined tidal stormwater channel bisects the Site dividing the western portion (west of the channel) and central and eastern portion (east of the channel) (Photo 2-3). The stormwater channel is noted to be excluded from the Site
- The majority of the central and eastern portion of the Site was covered with an unbound granular slag wearing course (Photo 2-1). A concrete slab (approximately rectangular) was noted in the central portion of the Site (Photo 2-2). Strip drains were observed adjoining the southern edge of the concrete slab with a stormwater pit (Photo 2-5)
- The majority of the western portion of the Site was exposed fill/grass covered with some irregular areas of granular slag wearing course (Photo 2-11 and Photo 2-12)

- The Site appears to have been filled and levelled over the western and central portions, excluding steep batter slopes immediately east and west of the stormwater channel. A large stockpile of coarse fill prevented observations at the surface of the majority of the eastern portion of the Site
- At the time of this RAP, the eastern portion of the Site and offsite areas to the east was being utilised for stockpiling a large amount of excavated material (~11m high), noting materials were proposed to be crushed and removed from the Site by NSW Ports (commencing late April 2022)
- Sporadic mature trees were present along the southern perimeter of the Site. Some isolated grass covered areas were observed on the western portion of the Site
- A small steel structure bridge was in the eastern portion of the Site (towards the north) crossing the stormwater channel
- The Site perimeter was enclosed by a chain wire fence with an entrance gate to the south, leading to Foreshore Road (Photo 2-6)
- An existing seawall runs along the Site's northern shoreline and comprised of cobble to boulder sized igneous rocks with some bulk concrete and broken concrete slabs interspersed within the rocks in a random pattern, presumably to act as an erosion protection facing to protect the filled shoreline area. Some precast concrete reinforced panels placed from Site level down to below the water line were noted in the vicinity of the creek channel outlet.

Pipeline route

- The Site consisted of hardstand comprising of granulated furnace slag (Chainage 0 to 180m), asphalt paved unused road (Chainage 180 to 220m), grassed covered vacant area (Chainage 220m to 260m), granulated furnace slag across unused rail line (Chainage 260m to 270m), grassed covered landscaped area (Chainage 270m to 320m), asphalt pavement (Chainage 320m to 460m). Example of each of the ground surfaces observed are shown in Photo 2-13 to Photo 2-15. The Site was partially inaccessible due to large sandstone stockpile between Chainage 70m to 100m (Photo 2-17). Investigation location BH08 in this portion of the Site was shifted slightly north
- Two rail lines were observed near borehole location BH04 (Chainage 260 to 270m) (Photo 2-15)
- A concrete bunded area containing coarse gravels (possibly inferred location of former No. 3 Jetty substation) was noted approximately 10m north of the Site near test pit location BH06 (Chainage 180m) (Photo 2-16)
- Multiple timber poles were observed to be stockpiled in the vacant parcel of Lot 6 between Chainage 90 m and Chainage 150m (Photo 2-20). The timber poles were covered with shells and had been removed from marine timber structures associated with the former harbour jetty. Evidence of stockpiles of shredded timber were noted (Photo 2-21).

SMEC also noted several locations where bonded asbestos containing materials (ACM), in 'good' condition, was observed at the ground surface during previous investigations. It is noted that some have since been removed and asbestos clearances issued. A summary of removal status and clearance documentation available is provided in Table 2-3 below.

Table 2-3 Summary of asbestos observations and removal status

Location and description	Date observed (Document reference)	Current Status
Central portion - Multiple surface fragments on ground surface in good condition	March 2021 (SMEC, 2021a)	Removed and clearance issued (Clearsafe Environmental Solutions on 22/10/2022)
Central portion - ACM fascia noted on an existing shed structure onsite.	March 2021 (SMEC, 2021a)	Building demolished. Removed and clearance issued (Clearsafe Environmental Solutions on 22/10/2022)
Central portion - ACM fascia noted on an existing shed structure onsite.	March 2021 (SMEC, 2021a)	Removed and clearance issued (Clearsafe Environmental Solutions on 22/10/2022))
Central portion - Buried ACM pipe was observed at the stormwater channel bank (Photo 2-9)	March 2021 (SMEC, 2021a)	Remains onsite (identified by Clearsafe Environmental Solutions on 22/10/2022))
Western portion - Small fibre cement sheet fragment	October 2021 (SMEC, 2021a)	Removed upon sampling. Clearance not completed in Western portion
Pipeline route (Chainage 70m to 100m) - Multiple surface fragments on ground surface in good condition over an area of approximately 30m length by 4m wide area (Photo 2-17). Protruding fragments were also observed on walls of heavily eroded embankment along the harbour foreshore (Photo 2-18 and Photo 2-19), and several fragments were noted to have fallen amongst break wall boulders.	April 2022 (SMEC, 2022)	Removed and clearance issued (Clearsafe Environmental Solutions on 5/04/2022))
Pipeline route (Chainage 210m) - Three ACM fragments in 'good' condition were observed on the grassed ground surface; two located approximately 5m west and one located 10m north of borehole location BH05 (Chainage 210m).	April 2022 (SMEC, 2022)	Remains onsite
Eastern portion – ACM fragments observed protruding walls of heavily eroded embankment along harbour foreshore (Photo 2-10)	April 2022 – additional observation	Remains onsite

2.5.1 Main terminal photos

Photo 2-1 Looking north east towards stockpile (March 2021)

Photo 2-2 Looking south west along concrete slab area (March 2021)

Photo 2-3 Looking north along the stormwater channel (March 2021)

Photo 2-4 Looking west at surface of stockpile (March 2021)

Photo 2-5 Looking west showing strip drains at edge of concrete slab (March 2021)

Photo 2-6 Looking north east along southern perimeter fence (March 2021)

Photo 2-9 Buried ACM pipe observed on channel bank (March 2021)

Photo 2-10 Evidence of ACM observed along eroded bank near stormwater outlet (April 2022)

Photo 2-11 Areas west of the channel facing north-east towards harbour (October 2021)-

Photo 2-12 Areas west of the channel facing south-west towards Foreshore Road (October 2021)

2.5.2 Pipeline route photos

Photo 2-13 Looking south across asphalt carparking area near BH02 (Chainage 380m)

Photo 2-14 Looking east across grassed area near BH05 (Chainage 210m)

Photo 2-15 Two rail lines near BH04 (Chainage 260m to 270m)

Photo 2-16 Concrete bunded area offsite north of BH06 (Chainage 180m)

Photo 2-17 ACM observed across area immediately north of Site near BH08 (Chainage 70m to 100m)

Photo 2-18 ACM observed within eroded embankment wall north of BH08 (Chainage 80m)

Photo 2-19 Example of ACM fragment observed protruding from eroded embankment wall near BH08 (Chainage 80m)

Photo 2-20 Timber poles stockpiled near BH07 (Chainage 110m)

Photo 2-21 Stockpile of shredded timber poles (Chainage 110m)

2.6 Groundwater wells

Twelve existing groundwater monitoring wells are onsite (including six historic wells and six new wells installed by SMEC 2021-2022). Eleven wells appear to be still useable for monitoring and one well was damaged and partially buried on side of stockpile inside a drum (Figure 2, Appendix A). Where previous survey was carried out to some of the monitoring wells, a summary of survey details are included in Table 2-4 below.

Table 2-4 Summary of groundwater wells onsite

Well no.	Inferred monitoring well ID	Easting	Northing	Reduced Level (m AHD)		Details
				Ground level	Top of well casing	
1	MW316 (note 1)	307769.09	6183022.99	2.54	2.46	Gatic well - Hex-key metal gatic flush with ground surface
2	MW5 (Note 2)	NS	NS	NS	NS	Gatic well – 'Older style' metal gatic flush with ground surface
3	OHMW28 (Note 3)	307778.51	6182987.64	2.41	3.09	Monument Well
4	ID Unknown (Note 4)	307814.26	6183015.20	2.66	3.28	Monument Well
5	OHMW20 (Note 3)	307832.75	6183030.30	2.89	3.89	Monument Well
6	MW Damaged (Note 4)	307826.72	6183045.32	3.31	Not surveyed	Monument Well – Well damaged and partially buried on side of stockpile inside drum
7	SMW01	307771.69	6183048.65	NS	3.33	Monument Well
8	SMW02	307889.38	6183043.42	NS	3.63	Monument Well
9	SMW03	307881.90	6183114.52	NS	3.78	Monument Well
10	SMW04	307848.12	6183124.30	NS	3.61	Monument Well
11	SMW05	307825.76	6183134.07	NS	3.58	Monument Well
12	SMW06	307734.25	6183055.70	NS	4.17	Monument Well

Note 1: Well location MW316 was labelled on the well cap, noting this location was not formerly shown on historical monitoring reports.

Note 2: Well locations MW5 was inferred from were inferred from maps within contamination assessment (CMPS&F, 1996).

Note 3: Well location OHMW28 and OHMW20 were inferred from maps within historical groundwater monitoring report (DP, 2009 and SLR, 2011).

Note 4: Remaining well identification remains unknown.

NS – Not surveyed

Gatic well = well finished level with ground surface with a steel gattic type cover

Monument well = well finished above ground surface with a steel monument

3 Site characterisation

3.1 Areas of Environmental Concern

Based on the desktop review and Site observations, a preliminary conceptual site model was developed, and eight potential areas of environmental concern were identified including:

- AEC 1 – Sitewide fill of unknown origin and quality during historical land reclamation activities
- AEC 2 – Former scrap metal yard (western portion) and former quarantine area (central portion) (circa 1980s)
- AEC 3 – Former timber yard (eastern portion) circa 1977 to 1993
- AEC 4 – Groundwater beneath the Site from surrounding industrial land uses
- AEC 5 – Inferred location of PAH site contamination identified in previous report
- AEC 6 - Historic railway line to Jetty No. 3 and Jetty No. 4
- AEC 7 - Acid production pipeline
- AEC 8 - Former building structures associated with Jetty operations including demolition

AECs are shown on Figure 4, Appendix A.

3.2 Site investigations

A Detailed Site Investigation (SMEC, 2021b) was undertaken in March 2021 and October 2021 and included soil contamination sampling at 26 test pits (TP01 to TP8, TP10 to TP27), targeting the identified areas of environmental concern. Additional observations only of stockpiled material were made at two test pits (TP9 and TP10A). Two baseline groundwater quality monitoring events were undertaken within three onsite monitoring wells (OHMW20, OHMW28 and SMW01) within the proposed main terminal. Laboratory testing was carried out for soil and groundwater for potential contaminants of concern.

Targeted Site Investigation (SMEC, 2022) was undertaken in March 2022 and April 2022 and included soil contamination sampling at nine boreholes/test pits (BH01 to BH09), located at approximately 50m intervals along the pipeline route targeting the identified areas of environmental concern. Additional observations only were made at one alternate borehole location (BH03A). Laboratory testing was carried out of soil for potential contaminants of concern.

Figure 2, Appendix A shows the previous test locations.

During each investigation, contamination laboratory testing of soil samples was carried out for potential contaminants of concern:

- Heavy metals (As, Cd, Cr, Cu, Pb, Hg, Ni, Zn)
- TRH, BTEX, PAH
- OCP, OPP, PCB
- Asbestos identification in soil

Due to depth and variability of fill encountered (up to 3.0m depth), laboratory testing was typically carried out between 2-3 soil samples per test location, selected based on subsurface conditions.

3.3 Subsurface conditions

Subsurface conditions summarised below are based on previous investigations by SMEC (2021a, 2021b, and 2022). In summary, the test locations encountered ground conditions comprising iron slag gravel (or topsoil), filling, aeolian sand and/or deeper estuarine sand deposits, overlying residual soil and weathered rock. A general summary of the subsurface conditions encountered during this Site investigation is shown below in Table 3-1 (main terminal) and Table 3-2 (pipeline route). Appendix C includes copies of engineering logs prepared by SMEC from previous investigations. Previous investigation borehole/test pit locations are shown within Figure 2, Appendix A.

Table 3-1 General Summary of Subsurface Conditions – Main terminal

Geotechnical Unit	Material Description	Depth to Top of Unit below surface level (m)
Unit 1A: Filling (Cemented Slag)	Gravel: moderately cemented, fine to coarse grained, angular	0 (all locations except - TP04- TP07, TP09, TP10A, TP15, TP16, TP19, TP20, TP22, TP24 and TP27)
Unit 1B: General Filling (Variable fill)	Variable: Gravelly Clay, Gravelly Sand, Gravel, Sand with gravel, Gravelly Silt, Clayey Sand, Gravelly Silty Sand, Clayey Gravel, Silty Clay, Sandy Clay to Sandy Gravel, medium to high plasticity, fine to coarse grained, poorly graded, angular with cobbles, including trace slag boulders and other trace rock boulders, coalwash gravel and/or anthropogenic material	0 – 0.2
Unit 1C: Filling (Stockpile Fill)	Variable: boulders with gravel and cobbles, to boulders, angular to subangular, boulder diameters up to 0.6 m, extremely to slightly weathered sandstone. Fill thickness up to ~11m in highest areas.	0 (encountered in TP09 and TP10A only)
Unit 1D: Fill (Inferred location of PAH contamination)	Clayey Silt, grey, brown or dark brown, mottled pale yellow, with trace gravel and anthropogenic materials (brick, plastic, wood bark, metal rod, copper pipe). Observed to contain some hydrocarbon odours (sweet phenolic)	0.2 -0.5 (encountered in TP15, TP16 and TP17 only)
Unit 2: Sand (Aeolian)	Typically, loose to medium dense, poorly graded, fine to coarse grained sand with some black carbonaceous and dark grey clay laminations, moist to wet	0.5 – 3.0 (all locations except - SMW01, TP09, TP10A, TP16, TP23, TP24 and TP26)
Unit 3: Sand and Clay (Estuarine)	Variable: Clay to Sand, high plasticity, firm and loose to medium dense, fine to coarse grained sand with some black carbonaceous and dark grey clay laminations, moist to wetter than the plastic limit	1.2 – 3.3 (encountered in TP02, TP03, TP06, TP07, TP10-TP14 and TP27)
Unit 4: Clay/Gravelly Clay/Sandy Clay (Residual)	Variably Clayey Sand, Clay to Gravelly Clay, fine to coarse grained gravel, medium plasticity, angular gravel, fine to coarse grained sand, trace silt, stiff to hard, wet equal to the plastic limit moisture condition	8.5 – 9.0 (encountered in BH2, BH5 and BH7 SMEC (2021a))
Unit 5: Weathered Rock - Latite (Dapto Latite)	Latite: fine to medium grained, extremely to distinctly weathered, soil strength to low strength	12.1 – 13.1 (encountered in BH2 and BH3 SMEC (2021a))

Table 3-2 General Summary of Subsurface Conditions – Pipeline route

Geotechnical Unit	Material Description	Depth to Top of Unit below surface level (m)
Asphalt	Dark grey/black, cemented.	0.0 (BH01 and BH02, BH03A only)
Fill (Cemented slag)	GRAVEL; pale grey to dark grey, weakly cemented, fine to coarse grained, angular	0.0 (BH04 only)

Topsoil Fill	Silty CLAY/Silty SAND, dark brown to brown, with rootlets and fine to medium grained sand and gravel	0.0 (BH03, BH05, BH07 and BH09 only)
Fill (Variable)	Gravelly SAND, Silty SAND, GRAVEL (Coalwash), Clayey SAND, Sandy CLAY, fine to coarse grained, including trace gravel, cobbles and boulders. Black coalwash gravel was observed at BH03, BH04 and BH06. Anthropogenic materials noted included timber sleeper (BH03), yellow pipe, metal objects (BH06), and ACM fibrocement fragments and nylon rope (BH08) Fill comprising natural sands and clays showed no obvious indicators to suggest fill was dredged estuarine soils (such as odours, presence of seashells).	0.0-2.0

3.4 Soil results

Copies of tables from previous reports which summarise the laboratory results for soil are included in Appendix B. Figure 4, Appendix A shows the soil test locations where criteria were exceeded.

The following sections discuss the results of soil investigations pertaining to the various portions of the Site. Asbestos is discussed for the whole Site in Section 3.4.3. Based on the conceptual site model, soil contamination may pose a risk to human health during development activities, including to construction workers, surrounding users and ecological receptors. Soil contamination requires remediation and/or management for the proposed redevelopment.

3.4.1 Main terminal

Subsurface observations recorded two main fill units across the central and eastern portion of the Site; namely Unit 1A: Upper Cemented Slag layer (typically 0.2m thickness) and Unit 1B: General Fill (variable depths between 0.5 and 3.0 m bgl), which likely concur with the historical placement of fill. Within the western portion of the Site, a localised area of fill was also observed as Unit 1D Fill at the inferred location of PAH contamination based on Site history information (refer to Section 2.4).

Soil samples collected and tested within Unit 1A (including TP2/0.0-0.1, TP14/0.0-0.2 and TP21/0.0-0.3) recorded contaminant concentrations below adopted investigation levels. Considering the relatively 'newer' placement of Unit 1A and relatively homogenous composition, this fill unit is unlikely to pose unacceptable contamination risk with respect to the industrial development.

Soil analytical results indicated Unit 1B recorded elevated concentrations of heavy metals (including lead and arsenic) above the adopted health-based soil investigation levels. Five sampling locations recorded heavy metal impacts (TP5, TP6, TP13, TP14 and TP23) located within the western and central portion of the Site as shown on Figure 4, Appendix A. Samples typically represented both fill gravel and sand (TP5, TP6, TP13 and TP23), estuarine sandy clay (TP13, TP14) and natural aeolian sand layer (TP13). Typically, soil contamination appeared to be within fill/natural clayey soils at depths between 1m bgl and 2.3m bgl, or in shallow fill at 0.2m bgl (TP6 only). The exception was for one location (TP13) where elevated lead concentrations were recorded within natural sand at a depth of at least 3.0 mbgl (TP13) suggesting deeper lead impact in this area. Heavy metal impacts recorded at these locations were assessed to potentially be attributed to fill material quality (AEC1) or previous Site land use activities (AEC2).

Assessment of the Unit 1C: Stockpiled material was beyond the scope of contamination assessment as this material will be removed from Site, but visually appeared to be an excavated sandstone material. Further geotechnical discussion is included within the preliminary investigation (SMEC, 2021a).

Soil analytical results representing Unit 1D fill recorded elevated concentrations of PAH (recorded as benzo(a)pyrene TEQ) above the adopted health-based soil investigation levels. Three soil sampling locations recorded PAH contamination (TP15, TP16 and TP17) located within the western portion of the Site as shown on Figure 4, Appendix A. Soil contamination appeared to be within layers described as clayey silt, brown/dark brown mottled yellow (TP15, TP16 and TP17) or deeper sandy clay dark grey brown black staining from organic matter (TP17). Contamination indicators in these soil layers included strong hydrocarbon odours (described as 'sweet phenolic type' odours) during test pit excavations.

Based on desktop review, the inferred location of PAH site contamination (CMPS&F, 1994) appears the likely source of PAH and TRH contamination recorded in soil within identified test pits (TP15, TP16 and TP17) located within the

western portion of the Site. Considering the material was noted to have been capped, SMEC assessed there was a high likelihood for soil contamination within this area (AEC5) as outlined within the CSM. The contamination appears localised to the Unit 1D soil layer, noting soil contamination /fill type was not observed within remaining test pits (TP18 to TP24) located within the western portion of the Site.

Contamination potential within the former timber yard (AEC3) can only be assessed at a preliminary level noting this area was occupied by the existing stockpiled materials. One test pit (TP10) located within this area indicated contaminants of concern were below the adopted investigation levels. Further assessment is required to confirm whether contamination has occurred within AEC3, to be carried out during a supplementary stage of investigation once this area becomes accessible.

3.4.2 Pipeline route

Soil analytical results representing fill soils described as mainly black 'coalwash' gravel recorded elevated concentrations of lead above the adopted health-based soil investigation levels at one location BH06 at depths between 0.9m and 1.8m (refer to Figure 4, Appendix A). A similar layer was also logged at locations BH03 (0.6m) and BH04 (0.3m), noting slightly elevated lead concentrations albeit below adopted criteria.

3.4.3 Sitewide - Asbestos

Bonded asbestos containing materials (ACM) were observed at various locations on the Site surface (refer to Section 2.5) and within fill soils at four test pit locations (TP4, TP7, TP27 and BH08). Loose asbestos fibre bundles were also detected within shallow fill soils at one test pit location (TP27), noting the remaining sixty-one (61) soil samples tested at the Site did not detect the presence of asbestos. The source of the subsurface ACM is not known and could be associated with the quality of the fill. Considering the variable quality of the fill across the Site and some limitations of borehole observations along the pipeline route (BH01 to BH05), there remains a potential of bonded ACM to be encountered elsewhere on the Site.

Asbestos contamination identified at the Site may pose risks to workers at construction stage during ground engagement activities. In accordance with Work Health and Safety terminology, asbestos contamination encountered in the immediate vicinity of TP27 would be considered 'friable' due to presence of loose asbestos fibre bundles. At remaining areas of the Site, the results did not record the presence of 'friable' forms of asbestos within fill soils tested and bonded ACM was observed in 'good condition' (i.e. not easily broken or crumbled by hand pressure). Further management of asbestos exposure risks to workers (including an area of 'friable' asbestos near TP27) should be documented within asbestos management plans and unexpected finds protocols during construction stage.

3.5 Groundwater

Baseline groundwater quality and levels were assessed at the main terminal Site during two previous groundwater monitoring events; one in March 2021 during the preliminary investigation (SMEC, 2021a) and an additional groundwater monitoring event in October 2021.

During one or both rounds, contamination laboratory testing of groundwater samples was carried out for potential contaminants of concern and additional 'baseline' monitoring parameters:

- Heavy metals (As, Cd, Cr, Cu, Pb, Hg, Ni, Zn)
- TRH, BTEX, PAH Phenols
- OCP, OPP, PCB
- Volatile halogenated compounds (VHCs)
- Nitrogen (ammonia, nitrate, nitrite)
- Reactive phosphorus
- Hardness, total dissolved solids,
- Major cations (calcium, magnesium, potassium, sodium)
- Major anions (chloride, sulphate and fluoride),
- Alkalinity

- Dissolved heavy metals (aluminium, arsenic, cadmium, chromium (total), copper, iron, lead, mercury, nickel, selenium and zinc)
- Total heavy metals (aluminium, manganese and iron)
- Per and poly fluoro alkyl substances (PFAS)

Appendix B includes a laboratory summary table for groundwater samples.

The results of groundwater monitoring events in March and October 2021 recorded elevated concentrations of heavy metals (including cadmium, copper, lead, nickel and zinc) and ammonia which exceeded adopted groundwater investigation levels for protection of marine aquatic ecosystems at the 95% species protection level.

The exceedances recorded in groundwater were in general terms similar to those previously recorded in historical monitoring within this Site. Heavy metal exceedances have also been recorded in the broader Port Kembla foreshore lands. The groundwater quality is likely to be a regional issue from long term historical industrial activities and land reclamation with poorer quality fill in Port Kembla, including beneath and surrounding the Site. The quality of the groundwater is not likely to have an impact to the proposed development itself, but there is potential for impact to downslope ecological receptors.

Based on preliminary information at the time of this assessment, the development is unlikely to alter the current groundwater regime where conditions would be made worse to the surrounding environment. The proposed filling of the Site with clean fill and use of less permeable surface coverings (e.g. pavements) would likely reduce infiltration and potentially improve groundwater conditions. SMEC recommended NSW Ports should be made aware of the results of the groundwater quality and as the landowner, they should confirm their acceptance of the development given these groundwater conditions.

A groundwater assessment was not carried out in the western portion of the main terminal Site, noting limited groundwater interactions are expected from the proposed development in this portion. It cannot be concluded whether there are existing and future risks posed to the environment from possible groundwater impacts associated with the identified soil contamination in this area. We understand the pre-existing groundwater contamination (if any) is the responsibility of NSW Ports and may be required to be assessed or managed at a later stage.

Along the pipeline route, groundwater was not intersected and is unlikely to be intersected as part of the proposed development based on Site topography and subsurface observations, therefore an assessment was not carried out or considered relevant.

A standalone Groundwater Assessment and Management Report has been prepared to address SEARs pertaining to management of groundwater impacts during construction and operational phase (SMEC, 2022c).

4 Conceptual site model

4.1 Overview

The objective of the conceptual Site model (CSM) is to summarise pertinent information derived from the studies undertaken at the Site and surrounding areas into a document which identifies the following, and how they inter-relate:

- The history of activities and land development at the Site and surrounding properties, including potentially contaminating activities and land uses.
- The environmental setting at the Site and surrounding affected properties.
- The inferred sources, nature and extent of contamination, including the various media affected by the contamination.
- The mechanisms for transport and attenuation of the contaminants, and exposure of identified receptors to the contamination.
- The potential health and environmental risks which the identified contamination is inferred to pose; and
- The potential contamination threat to the proposed development based on current and previous investigation work.

Based on the findings of the desk-based review, areas of potential environmental concern and associated contaminants of potential concern have been identified previously by SMEC (2021b and 2022). As the CSM is iterative, further revision to the CSM is expected be carried out based on the findings of additional detailed site investigation activities (refer to Section 6).

A CSM has been prepared which presents potential source(s), pathway(s) and ecological/human receptor(s) linkages. For a risk to exist all three components (source, pathway, receptor) of the CSM must exist. The CSM should form the basis for decisions regarding the scope of works for further assessment and the ongoing contamination management and remediation options.

The CSM is made up of contaminants of potential concern (CoPC) and receptors that could be exposed to the CoPC.

4.2 Contamination sources

Areas of Environmental Concern (AEC) and Contaminants of Potential Concern (CoPC) were assessed based on Site history information and Site observations. Identified AEC and CoPC are summarised in Table 4-1 below and shown on Figure 4, Appendix A.

Table 4-1 Areas of environmental concern

No.	AEC	Part of Site	Likelihood of Contamination*	Media Potentially affected	COPC
AEC1	Sitewide fill of unknown origin and quality during historical land reclamation activities (whole Site)	Main terminal and pipeline route	High (Unit 1B and general fill described as 'Coalwash' in pipeline route) Low (Unit 1A Cemented slag layer)	Soil and groundwater	Heavy metals TRH, BTEX, PAHs, OCP, OPP, PCB, asbestos
AEC2	Former scrap metal yard and former quarantine area (central) (circa 1980s)	Main terminal (Central)	Medium (Unit 1B)	Soil and groundwater	Heavy metals TRH, PAHs, Phenols, OCP, OPP, PCB, VHC
AEC3	Former timber yard (eastern portion) circa 1977 to 1993	Main terminal (Eastern)	Medium (*to be assessed)*	Soil and groundwater	Heavy metals TRH, PAHs, OCP, OPP, PCB
AEC4	Groundwater beneath the Site from surrounding industrial land uses	Main terminal	High (Heavy metals and inorganic compounds) Low (remaining PCOCs) *Refer to SMEC (2021b)*	Groundwater	Heavy metals TRH, BTEX, PAHs, Phenols, OCP, OPP, PCB, VHC Sulfur/nitrogen compounds, ammonia Acidity (low pH)
AEC5	Inferred location of PAH site contamination identified in previous report (CMPS&F, 1994) (within the western portion)	Main terminal (Western)	High	Soil and groundwater	Heavy metals TRH, PAHs, Phenols
AEC6	Historic railway line to Jetty No. 3 and Jetty No. 4	Pipeline route	Medium	Soil	Heavy metals Asbestos TRH, OCP, OPP
AEC7	Acid production pipeline	Pipeline route (Chainage 390m to 460m)	Low	Soil	Acidity (low pH)
AEC8	Former building structures associated with Jetty operations including: weathering of hazardous building materials and/or ineffective demolition practices Chemical usage/storage/spillage (unknown potential)	Pipeline route	Medium	Soil	Heavy metals TRH, BTEX, PAHs, OCP, OPP, PCB, asbestos

*Notes: This is a qualitative assessment of likelihood of contamination being detected from the data reviewed, not financial or other risk associated if contamination were to be detected (Low, moderate or high).

Heavy Metals (Arsenic, cadmium, chromium, copper, lead, mercury, nickel and zinc), TRH (Total Recoverable Hydrocarbons), BTEX (benzene, toluene, ethylbenzene, xylene), PAH (Polycyclic Aromatic Hydrocarbons), OCP

(Organochlorine pesticides), OPP (Organophosphate pesticides), PCB (polychlorinated biphenyl's), VHC (Volatile halogenated compounds), VOC (Volatile organic compounds)

4.3 Exposure pathways

The pathways of exposure could consist of:

- A transport mechanism
- A route of exposure.

Based on Site information, there is potential for the following contamination pathways to exist at the Site:

- Disturbance of potential soil contamination and exposure by ingestion, dermal contact or inhalation
- Air transport of particulates (dust) and exposure by inhalation
- Vapour intrusion and inhalation
- Surface water runoff
- Leaching into (vertical) and migration of (lateral) contaminated groundwater.

4.4 Potential receptors

4.4.1 Human receptors

Based on the information available, and the proposed land use as industrial bulk ethanol storage facility and pipeline route the potential human receptors have been assessed to include:

- Site workers during future construction works or future maintenance activities
- Site workers during operation of the storage facility (main terminal only)
- Surrounding industrial Site occupants and workers.

SMEC consider that groundwater beneficial users are unlikely for a coastal port area, noting registered groundwater bores are for monitoring purposes. Groundwater would be saline.

4.4.2 Ecological receptors

Based on the information available, and the current and proposed land use the potential ecological receptors could comprise of:

- Downgradient aquatic ecosystems within marine harbour environment

For a proposed industrial ethanol storage facility and pipeline route, onsite ecological receptors such as terrestrial organisms and plants are not considered relevant for this Site.

4.5 Source pathway receptor linkages

Potential source-pathway-receptor linkages are where contaminated media (e.g. soil, surface water and/or groundwater) (if present) has the potential for adversely impact on human health or ecological values for the Site via complete exposure pathways. For a risk to exist all three components (source, pathway, receptor) of the CSM must exist.

The following is considered:

- During redevelopment of the ethanol storage facility and pipeline route, plausible linkages may occur for construction workers, surrounding users and ecological receptors in adjacent waterways during development/disturbance of the Site. Soil disturbance may cause potential exposure via dermal contact, inhalation of dusts and/or ingestion of soils/groundwater and sediment mobilisation into waterways.
- During operation, there are unlikely to be potential source-pathway-receptor linkages to human receptors where potential contamination remains buried beneath a capping layer of suitable fill materials. Exposure scenarios would be limited to intrusive maintenance workers for which long term management measures would apply.

- Groundwater exposure pathways are plausible to human health receptors during construction at the main terminal only (i.e. intersected during earthworks for piles installation, installation of stormwater tanks and gross pollutant traps, and/or trenching for underground utilities trenches). Plausible exposure pathways are not considered during operation with human receptors. Due to proximity to the Port Kembla Outer Harbour, plausible exposure pathways are possible with marine aquatic ecosystems upon groundwater discharge to the receiving harbour. Groundwater quality beneath the Site has the potential to vary based on groundwater flow directions, climatic influences and other migration of other offsite industrial contamination sources.

5 Remedial Action Plan

5.1 Remediation goal

The remediation goal is to manage pre-existing soil contaminant concentrations at the Site being leased such that redevelopment construction activities do not cause or further exacerbate contamination and that the Site:

- May be assessed to be suitable for its intended leased purpose (i.e. commercial/ industrial ethanol storage facility and pipeline route)
- Does not pose an unacceptable risk to human health.

A standalone Groundwater Assessment and Management Report has been prepared to address SEARs pertaining to groundwater (SMEC, 2022c). Based on current findings and due to limited groundwater interactions expected during the proposed redevelopment, remediation/management measures for groundwater contamination is not considered warranted. As outlined in the lease agreement with NSW Ports (ref Item 25 Environmental Obligations), it is understood that NSW Ports as landowners accept the current pre-existing groundwater conditions at the Site. This agreement requires Manildra not to cause or exacerbate any contamination or pollution as a result of the redevelopment.

5.2 Actions required

Based on the CSM presented in Section 4 and with reference to the conclusions and previous recommendations by SMEC (2021a, 2021b and 2022), the following further investigation and remediation is required at the Site:

5.2.1 Further investigations

Additional contamination investigations are required to supplement existing data and allow characterisation of the Site including within previously inaccessible areas of the main terminal (eastern portion) due to the large sandstone stockpile.

The objective will be to further assess if contamination potentially poses an unacceptable risk to human health and/or has the potential to preclude development of the Site for the proposed use. The findings of this investigation would also be used to assess whether there is a material change to preferred remedial options requiring a subsequent update to this RAP. Further details with respect to the investigations outlined above are presented in Section 6.

5.2.2 Remediation/management

Based on the current Site characterisation (Section 3) and conceptual site model (Section 4), soil fill materials described as Unit 1B (General Fill) in selected areas of the Site are impacted with:

- Heavy metals (arsenic and lead)
- Asbestos

Further, soil fill materials described as Unit 1D (Inferred location of PAH contamination) within the western portion of the Site are impacted with:

- Polycyclic aromatic hydrocarbons (PAHs)

These soil contaminants were assessed to require remediation/management with respect to the proposed development. Although observed in selected areas of the Site, variability in ground conditions is expected, particularly for asbestos. On this basis, this RAP considers remediation/management is required for all soil fill materials described as Unit 1B (General Fill) and pipeline route fill, where required to be disturbed, and would be subject to validation screening during earthworks stages (Refer to Section 8.3.2).

Other occurrences of surface bonded ACM fragments and a buried asbestos pipe are also required to be remediated (refer to Section 2.5).

Remediation/management is not required for Unit 1A (Cemented slag) as this is considered to have a low likelihood for contamination and would be managed under an unexpected finds protocol.

Note: The above remediation/management strategy may need to be amended subject to the findings of further investigations results which remain to be completed across the whole Site.

Further details with respect to the remediation/management outlined above are presented in Section 7.

5.3 Remedial options review

5.3.1 NSW EPA remediation management hierarchy

The ASC NEPM Toolbox (Key Principles for the Remediation and Management of Contaminated Sites) outlines the preferred hierarchy of options for site clean-up and/or management as follows:

- On-site treatment of the soil so that the contaminant is either destroyed or the associated hazard is reduced to an acceptable level
- Off-site treatment of excavated soil so that the contaminant is either destroyed or the associated hazard is reduced to an acceptable level, after which the soil is returned to the Site.

If the above is not practicable, then other options for consideration should include:

- Removal of contaminated soil to an approved site or facility followed by, (where necessary) replacement with clean fill
- Isolation of the contamination on-site in an appropriately designed and managed containment facility
- A less sensitive land use to minimise the need for remedial works which may include partial remediation
- Leaving contaminated material in-situ providing there is no immediate danger to the environment or community and the Site has appropriate management controls in place.

ASC NEPM (1999) also indicates that:

- Clean-up should not proceed if the process is likely to create a greater adverse effect than leaving the Site undisturbed. This decision would need to be revised in the light of new technologies or clean-up strategies becoming available
- Sustainability of options should be considered.

5.3.2 Remediation Options Evaluation

CRC CARE has prepared a set of guidelines which form a National Framework for Remediation and Management of Contaminated Sites in Australia. Guidance is available on remediation options assessment, various remediation technologies and for implementation and post remediation.

The primary drivers for remediation on the Site are asbestos, heavy metals (arsenic and lead) and polycyclic aromatic hydrocarbons as they exceed health criteria, therefore the discussions that follow focus on these contaminants.

Table 5-1 below provides an appraisal of the above soil remedial options.

Table 5-1 Remediation Options Evaluation

Remedial Option	Discussion
On-site treatment and reuse	On-site treatment technologies for inorganic contaminated soils (such as arsenic and lead) or semi-volatile organic compound (including PAHs) could include chemical immobilisation and solidification. This involves mixing reagents into the contaminated soils to alter its physicochemical properties or by physically encapsulating the contaminants (for example within cement matrix). On-site treatment technologies for asbestos contaminated soils could include tilling/turning of the soils to facilitate removal. This involves mechanical disturbance to the depth of fill and systematic removal. The above on-site treatment technologies are usually employed for widespread contamination applications and require specific plant and equipment. Treatments can also be costly, have long time frames and may not reach end points. As the Site will be mostly covered by pavements/hardstand, potential exposure to the inorganic/asbestos contaminants will be prevented in the long-term suggesting treatment is unlikely to be required.
Off-site treatment and reuse back on-site	Like above. There are unlikely to be nearby offsite treatment facilities that would be cost effective.
On-site containment	Contaminated soils (including heavy metals, asbestos and/or PAHs) could be excavated and reused onsite beneath paved areas of the development. The bulk earthworks plan (SK-108B) shows several areas where there are opportunities for containment within proposed 'filled' areas beneath pavements. At the time of this RAP, concept designs are being developed as part of documentation for approval by the planning authority, Wollongong City Council. Where contamination impacts are widespread, the onsite containment option is expected to be more cost effective in comparison to removal offsite and replacement option. Some costs are expected to be associated with the design, construction and documentation of the intended placement area, implementation of environmental management measures during construction stage and ongoing administrative measures under a long-term environmental management plan.
Removal offsite and replacement	Contamination is removed from Site with no residual impacts. Removal offsite may also reduce the risk of secondary contamination by soil leaching into the underlying groundwater, which is noted to be approximately between 1.5-2.4 metres below ground level at the Site. This option is more suited for relatively smaller contaminated areas (or smaller excavations), noting cost-benefits depend mainly on the quantity of spoil and offsite disposal costs to landfill. Site characterisation indicated soil contamination may be associated with historic fill and/or former land uses suggesting a potential for widespread impacts. Variability in fill composition across the Site reduce certainty of assessed extents of soil contaminated layers. Therefore, this option is likely to be less cost effective in comparison to onsite containment option.
Management Strategy	Contaminated soils could involve adoption of a less sensitive land use or controls on Site activities in the contaminated area. For this option, administrative controls would be documented within an Environmental Management Plan. Like 'On-site containment', this option is preferred for widespread contamination impacts. For this Site, the relative cost-benefit from additional management measures within an ongoing industrial land use setting is likely to outweigh alternative remedial options.

5.3.3 Preferred Remedial Option

Based on the remedial options evaluation, a review of specific technologies is not considered warranted. The remedial option of on-site containment and long-term management strategy has been selected as the preferred option as this is seen as practical and cost-effective remedial option to address the Site contamination in consideration of the site specifics, these being:

- The Site is only being leased by Manildra

- Potential for widespread contaminated areas and larger soil volume (subject to ongoing assessment)
- Ongoing commercial industrial land use which would normally facilitate long term environmental management measures
- The bulk earthworks plan shows several areas where there are opportunities for containment within proposed 'filled' areas beneath pavements.

The preferred option has been selected in consultation with Manildra. It is recommended the preferred Site remedial strategy be discussed and agreed with NSW Ports as part of the review of this RAP.

6 Additional investigations

Additional stages of detailed site investigation have not been completed at the time of this RAP. SMEC propose to undertake the additional investigations using test pitting investigation techniques immediately following removal of the existing sandstone stockpile (estimated by June 2022).

For the main terminal Site, the NSW EPA (1995) Sampling Design Guidelines recommends a minimum of 33 sample locations to characterise a Site of this size. Therefore, it is proposed for 7 additional contamination investigation locations to supplement previous 26 investigation test pits. Soil samples will be tested for the identified contaminants of potential concern consistent with the previous investigation (refer to Section 3.2).

Figure 2, Appendix A shows the proposed additional test pit locations. Table 6-1 below outlines the proposed number/depth of additional test locations and outlines the proposed additional laboratory testing.

Sampling will be from test pits with soil samples collected at regular intervals, major changes in stratigraphy and any zones/layers with visual/olfactory evidence of contamination. Samples will be collected in duplicate and screened for volatile contaminants using a Photoionisation detector (PID).

Table 6-1 Summary of proposed additional laboratory testing

Indicative timing	Proposed no. of additional test locations (Depth)	Proposed no. of laboratory tests*	Contaminants of potential concern
After stockpile removal (June 2022)	7 test pits within the footprint of the stockpile once removed (Depth ~2.0m below ground level, or 0.5m below base of fill) Targeting AEC3 and areas of propose 'cutting' within the development	17 primary soil samples (7 locations)	Heavy metals (As, Cd, Cr, Cu, Pb, Hg, Ni, Zn) TRH, BTEX, PAH OCP, OPP, PCB Asbestos identification in soil

* Indicative minimum number and subject to field observations and screening. At least 2-3 samples per location targeting major layers or visual contamination indicators as described earlier.

The DQOs that will be employed for this additional investigation are described in Section 5.1 of Detailed Site Investigation (SMEC, 2021b), and adopted DQIs are included in Appendix G.

7 Remediation works

7.1 Overview

The remedial works that are required to be carried out are described in the following subsections. Remediation works will involve the following general activities:

- Set up site controls
- Surface ACM removal
- Contamination management during earthworks activities including:
- Deep and/or localised excavations (i.e. stormwater features and pipework, other structural footings and/or foundations such as retaining walls))
- Shallow widespread earthworks (i.e. site recontouring as 'cut to fill')
- Pipeline route excavation (i.e. 'cut and cover' trenches and surplus material reuse/onsite containment)
- Onsite containment of contaminated soils
- Validation screening of excavated spoil to confirm suitability for onsite reuse (either restricted or unrestricted)
- Offsite disposal of asbestos wastes to a suitably licensed facility
- Preparing a validation report and long-term Environmental Management Plan (LTEMP).

7.2 Roles and responsibilities

An overview of the key roles and responsibilities for the implementation of the RAP are summarised in Table 7-1.

Table 7-1 Roles and Responsibilities

Role	Key Responsibilities
Client / Principal Contractor* (Manildra)	Overall responsibility for the project Community consultation / stakeholder engagement Engaging a remediation contractor and environmental consultant Principal Contractor responsibilities Workplace safety Service location and disconnection Site security Site environmental management Incident response Site amenities
Remediation Contractor (and licenced asbestos removal contractor)	All remedial works (excavation, disposal, survey etc) Prepare and implement Asbestos Removal Control Plan
Environmental Consultant	Guiding extent of remedial/management activities Validation observations, sampling, and analysis Provide advice if unexpected finds encountered Validation reporting Preparing LTEMP for onsite containment areas

* Assumes Manildra is the Principal Contractor

7.2.1 Responsibilities of asbestos removalist

7.2.1.1 Licensing and permits

Work Health and Safety (WHS) regulations place obligations on licence holders to ensure that asbestos work is performed in a manner that reduces the risk to the health of both asbestos workers and the public.

Asbestos removal works is required to be carried out by a contractor with an NSW asbestos removal licence. Friable asbestos removal requires a Class A licence. Based on previous observations, the asbestos observed/detected at the Site was primarily in bonded form, except for single soil sample (TP27/0.2-1.0) which detected 'fragments and loose fibre bundles' within fill soils (SMEC, 2021b).

SafeWork NSW is to be notified five calendar days before undertaking licenced asbestos removal work using the appropriate online notification form.

A copy of the licence must be displayed at the place of work.

7.2.1.2 Asbestos removal control plan

The asbestos removalist must develop an Asbestos Removal Control Plan (ARCP), specific to the Site, before commencing any asbestos removal work. The ARCP shall be based on the removal requirements contained within this RAP. The purpose of the ARCP is to help ensure the removal is well planned and carried out in a safe manner and shall address all details relevant to the removal job.

The asbestos removalist shall consult with the primary works contractor to finalise the ARCP, and Manildra shall be provided with a final copy of this plan.

The presence or likelihood of other hazards associated with the asbestos removal work shall be assessed by the asbestos removalist.

7.2.1.3 Supervisory personnel

The asbestos removalist must ensure the removal is adequately supervised and is carried out in a safe manner by ensuring that a nominated supervisor recognised by SafeWork NSW is always on site when licensed work is being carried out.

Appropriate qualifications generally include successful completion of SafeWork NSW recognised courses in asbestos work and asbestos supervision, appropriate experience in asbestos work, and the ability to demonstrate safe work methods.

The asbestos removalist shall ensure all supervisory personnel have a detailed knowledge of the precautions and procedures outlined in this technical specification.

The supervisory personnel shall ensure that the primary works remediation contractor and Manildra are reliably and regularly informed of the progress of the removal work.

The licence holder must notify SafeWork NSW in writing of any changes to the nominated supervisor within seven working days.

7.2.1.4 Competence

All persons involved in the removal of ACM must be competent for the tasks allocated to them. The licence holder must ensure asbestos workers have had training in safe work methods in asbestos work.

7.2.1.5 Training and information for asbestos removal workers

Persons carrying out asbestos removal work shall be trained so they can carry out this work safely and without risk to their own health or the health of others.

This training must reflect the specific type of asbestos work to be undertaken.

Asbestos removalists shall keep a written record of all training provided to each of their asbestos removal workers and ensure these records are readily accessible.

Asbestos removalists shall also provide the following information to all their asbestos removal workers and to all applicants for employment as an asbestos removal worker:

- The health risks associated with exposure to asbestos

- The need for, and details of, health surveillance, including medical examinations in accordance with the Guidelines for Health Surveillance [NOHSC: 7039 (1995)].

7.3 Approvals, notifications, and licences

State Environmental Planning Policy No 55 - Remediation of Land under the Environmental Planning and Assessment Act 1979 indicates that remediation is categorised as:

- Category 1 - requiring consent; or
- Category 2 - not requiring consent (and giving Council 30 days' notice).

The proposed development has been submitted for approval to NSW Department of Planning and Environment via a State Significant Development (SSD) application. We understand that remedial works will fall under the requirements of the application. This remedial action plan will form part of the approval process for the whole of the development and is therefore captured under Category 1.

Asbestos removal works is required to be carried out by a contractor with an NSW asbestos removal licence. Friable asbestos removal requires a Class A licence. SMEC (2021b and 2022) assessed the asbestos found at the Site in the investigation phase was primarily occurred in bonded form, except for single soil sample (TP27/0.2-1.0) which detected asbestos as 'loose fibre bundles' within fill soils (SMEC, 2021b).

SafeWork NSW is to be notified five calendar days before undertaking and licenced asbestos removal work using the appropriate online notification form.

An Environment Protection Licence may be also required to facilitate the lawful materials transport of excavated surplus materials from the pipeline route via Foreshore Road (offsite) for reuse/onsite containment within the main terminal Site (refer to Section 9.1.7.1). Further clarification is being sought from NSW EPA on this matter.

7.4 Site set up and controls

A remediation contractor will set up the Site with appropriate temporary fencing, access, and environmental controls. These are described in more detail in Section 9.1.

7.5 Asbestos removal

7.5.1 Surface ACM removal

SMEC (2021a, 2021b and 2022) previously identified several fragments of bonded ACM at the ground surface (refer to Section 2.5 and Figure 4, Appendix A) and recommended removing all surface asbestos prior to any development works commencing. Prior ACM removal activities have already occurred by NSW Ports and asbestos clearance documentation recorded and provided to Manildra (refer to Section 2.5).

Additional inspections and clearances of surface ACM are required for remaining Site areas prior to any development works commencing including, but not limited to:

- Main terminal - Western portion
- Pipeline route (Chainage 180 to Chainage 460m) (non-paved areas only)

Unless carried out by the landowner, Manildra's appointed remediation contractor should arrange for remaining surface ACM fragments to be removed from the ground across the remaining areas of the Site prior to any earthworks.

Asbestos removal is to be carried out by a suitably licenced asbestos removalist under an asbestos removal control plan prepared by them. Disposal dockets are to be retained for the validation report. A clearance inspection is to be carried out by a competent person following asbestos removal works and successful clearance obtained prior to demolition/earthworks commencing.

Where occurrences of ACM are observed by Manildra at the surface, these should also be removed in accordance with the stated requirements. A clearance certificate is to be issued confirming this has occurred.

7.5.2 Location and removal of asbestos pipes

SMEC (2021a and 2021b) previously identified a buried asbestos pipe within the sub-surface in the central portion of the main terminal Site (refer to Figure 5, Appendix A). The depth and extent of this pipe is not yet confirmed however based on proposed earthworks; this pipe has potential to be disturbed during the development. Other existing pipes not yet observed have potential to contain asbestos.

The asbestos removal contractor will develop a methodology to safely expose and remove the pipe, including exposing in all directions to terminus and safe removal. The pipe(s) could extend a significant distance and could have branches. The methodology should avoid any cutting or damage to avoid generation of smaller fragments/dust, with the pipe to be removed in segments at joins (or similar).

Where the pipe is encountered in a fragmented state or the act of excavation inadvertently breaks up the pipe, the pieces should be picked out of the trench and validation should comprise visual inspection and soil sampling. If the pipe can be excavated as a whole piece, then visual clearance only may be adequate.

Exposing pipes at any other stormwater related surface drains onsite should also be carried out to check if they are ACM and if so, removed as described above. Dust suppression techniques e.g. water misting should be used during pipe removal works (refer to Section 9.1.10).

7.6 Contamination management during earthworks activities

7.6.1 General

Earthworks activities will be carried out assuming fill soils are 'contaminated' until such time as they are either segregated or confirmed to be 'uncontaminated' with strict material management and tracking protocols. 'Contaminated' soils will be temporarily stockpiled separately before being placed in onsite containment areas and capped using a suitable capping profile. Once confirmed by validation screening, 'uncontaminated' soils will be permitted for reuse onsite without restrictions.

As outlined in the remedial goals (Section 5.1), Manildra will not remediate/manage pre-existing contamination issues which will not be disturbed during redevelopment within the Site (including at depths beneath or areas beyond proposed disturbance) and/or are outside the Site study boundary.

Figure 5, Appendix A shows the proposed earthworks extents and onsite containment areas identified within the Site. These areas described in the following sections of this RAP.

Excavation works must be carried out in manner that reduces the potential for contamination of soils in other areas of the Site or cross-contamination of remediated areas. Excavation will be carried out in line with the following general items and more specifics for certain areas are provided in sections below:

- Locate and disconnect all underground utilities entering the Site
- Disconnection and/or measures to protect overhead utilities (if any) should be considered if they could interfere with the proposed works
- All earthworks activities will be carried out under asbestos removal controls for the duration of the earthworks at the Site. Any 'contaminated' soils are required to be segregated for onsite containment under asbestos removal controls. Any occurrences of bonded ACM fragments which are observed/encountered on surface of disturbed areas are required to be progressively removed for offsite disposal (refer to Sections 7.5.1 and 7.7). Once confirmed by validation screening, 'uncontaminated' soils may be permitted for reuse onsite without restrictions.
- Suitable machinery to be selected for the works based on the Site constraints. Geotechnical implications will also be considered by the remediation contractor as necessary such as effects on adjacent structures from vibration or undercutting near stormwater channel.
- Excavation works to be carried out with care to reduce potential for cross contamination. Excavation works will avoid machinery tracking back into remediated areas. If re-tracking into clean areas is required, machinery must be decontaminated before entering clean areas
- 'Contaminated' soils will be segregated and stockpiled separately from 'uncontaminated' soils for reuse onsite subject to the results of validation screening (also refer to Section 8.3.2). 'Contaminated' soils will be restricted

for reused within onsite containment areas only, whereas 'uncontaminated' soils will be permitted for unrestricted reuse onsite.

- An environmental consultant with suitable experience will be present onsite to guide the excavation of contaminated soils. The excavations will be extended to pre-determined limits or further if there is visual or olfactory evidence of impact
- Adequate protection will be provided around the perimeter of the excavations that are left open such as temporary fencing or barriers, along with warning signs, in accordance with SafeWork NSW requirements.

Further details on specific requirements for proposed excavations are included below.

7.6.2 Deep excavations

Deeper excavations (typically greater than 1.0m below ground level) will be carried out at selected areas of the Site for installation of stormwater treatment units, pipework and preparation of gravity retaining wall foundations. Deep excavations will also be carried out along the underground section of the pipeline route to No. 4 Jetty between Chainage 180m and Chainage 460m. Some temporary vertical shoring or terracing/benching is likely to be required to facilitate deeper excavations and installations, subject to further geotechnical assessment.

Figure 5, Appendix A shows the indicative locations of deeper excavations. Based on information supplied to SMEC, preliminary estimated dimensions for excavations include:

- Excavation 1 – Proposed stormwater treatment unit (approximately 3m x 3m x 3.0m depth)
- Excavation 2 – Proposed stormwater treatment unit (approximately 3m x 3m x 3.3m depth)
- Excavation 3 – Proposed underground storage tank (approximately 10m x 5m x 4.5m depth)
- Gravity retaining wall excavation - Linear trench excavation (approx. 220m) of concrete footing with dimensions (continuous approximately 1.3m wide by 1.0m depth below existing ground level, with multiple concrete backhoe piers 0.45m wide by 2.0m depth below existing ground level).
- Stormwater pipework – Linear trench excavation (approx. 600m) are anticipated to be 0.5m wide by 1m depth below existing ground level. Installation is expected to involve 'cut and cover' trenches reusing materials excavated during reburial, excluding surplus spoil material.
- Pipeline route excavation – Linear trench excavations (approx. 280m) are anticipated to be 2.0m wide by 1.8m depth below existing ground level. Installation is expected to involve 'cut and cover' trenches reusing materials excavated during backfill (minimum 1.2m compacted backfill), excluding surplus spoil material.

The Site investigation previously identified mainly bonded asbestos (i.e. fragments of ACM fibre cement sheeting in good condition), except for location TP27 (depth between 0.2 and 1.0 m bgl) where loose asbestos fibre bundles were detected in a single soil sample (i.e. one of 61 samples tested). Asbestos at TP27 is considered 'friable' in accordance with Work Health and Safety terminology (Section 3.4.3). Heavy metal impacts were also detected within fill and underlying natural soils at selected locations of the main terminal (Section 3.4.1) and pipeline route (Section 3.4.2).

The following will apply to deep excavations:

- Deeper excavations will be carried out under the guidance of an environment consultant to visually monitor for evidence of contamination and undertake initial segregation of fill and natural soils. This will include separation of fill layers Unit 1A (Cemented slag) from Unit 1B (General fill) and other suspected contaminated layers.
- Deeper excavations will be carried out in the presence of an asbestos removalist (refer to Section 7.2.1) in accordance with the ARCP. Controls will be adopted as follows:
  - Excavation 1 and vicinity: The whole of Excavation 1 will be carried out under supervision of a Class A licensed asbestos assessor and specifically including airborne fibre monitoring during disturbance activities (refer to Section 9.1.10.2). To account for potential risks in surrounding areas, the same control applies to shallow earthworks cuts within a minimum diameter of 31m around TP27 (based on NSW EPA 1995 Sampling Design Guidelines Table 1 minimum hot spot diameter (31 metres) based on the approximate grid size for the Site of the main terminal).
  - Remaining Site excavations: Bonded asbestos contamination was identified within soils across some areas of the Site main terminal and pipeline route (refer to Section 3.4.3). Remaining Site excavations through general fill are considered 'suspected ACM' subject to visual screening during earthworks. Therefore, Site

excavations will be carried out in accordance with the controls suitable for 'bonded asbestos' (generally excluding air monitoring, following initial precautions - See Section 9.1.10.2).

- Fill soils from Unit 1A (cemented slag) will not require remediation/management measures and are permitted for unrestricted reuse.
- Fill soils from Unit 1B (General fill) and topsoil/fill along the pipeline route are required to be visual screened and undergo validation sampling carried out to assess their quality (including asbestos and heavy metals) and suitability for unrestricted reuse (Section 8.3.2). 'Contaminated' soils will be restricted for reuse to containment areas.
- Any occurrences of bonded ACM fragments which are observed/encountered on surface of disturbed areas are required to be progressively removed for offsite disposal (refer to Sections 7.5.1 and 7.7).
- Natural soils including thin estuarine layer (dark coloured clayey soils) and aeolian sand are required to undergo validation sampling to assess their quality (including heavy metals only) and suitability for unrestricted reuse. 'Contaminated' soils will be restricted for reuse to containment areas. Where applicable, soil treatment and verification of possible acid sulfate soil layers would be managed by the Acid Sulfate Soils Management Plan (SMEC, 2022b) (refer to Section 9.1.6)
- Once confirmed by validation screening, 'uncontaminated' soils will be permitted for unrestricted reuse, including as deep excavation/trench backfill material subject to geotechnical requirements.

7.6.3 Shallow excavations

Shallow earthworks (typically less than 1.0m) will be carried out across widespread areas of the Site to achieve site recontouring and preparation retaining walls. The Bulk Earthworks Plan (ref: 20399-C07, copy included in Appendix D) indicates red shaded areas of proposed 'cutting' and green shaded areas of proposed 'filling'. The Site Grading and Drainage plan (ref: 20399-C07, copy included in Appendix D) indicates a diversion swale 'cutting' and stormwater pipe in the western portion of the Site will involve excavation through areas identified within AEC 5 (Inferred location of PAH site contamination).

Figure 5, Appendix A shows the indicative extent of shallow excavations. Due to relatively shallower depth and widespread area, Manildra are proposing to use earthworks machinery suited for site recontouring (i.e. front-end loader, graders or similar).

Shallow excavations which only disturb less than the depth of Unit 1A (Cemented slag) will not require remediation/management measures. Shallow excavations which have potential to intersect layers of Unit 1B (General fill) will require the similar management protocols for fill materials as for deep excavations, with some modifications.

The following will apply to shallow excavations:

- Shallow excavations will be carried out under the guidance of an environment consultant to visually monitor for evidence of contamination. The environmental consultant will consider findings of both previous and additional contamination investigations, to inform segregation of fill within certain 'suspect' areas of the Site.
- Fill soils excavated from Unit 1B (General fill) are required to be visually screened and undergo validation sampling carried out to assess their quality (including, at a minimum, asbestos and heavy metals) and suitability for unrestricted reuse (refer to Section 8.3.2). 'Contaminated' soils will be restricted for reuse to containment areas.
- Any occurrences of bonded ACM fragments which are observed/encountered on surface of disturbed areas are required to be progressively removed for offsite disposal (refer to Sections 7.5.1 and 7.7).
- Once confirmed by validation screening, 'uncontaminated' soils will be permitted for unrestricted reuse, including within filling areas of the Site.

In addition, the following will apply to shallow excavations (involving diversion swale 'cutting' and stormwater pipe excavation) through areas identified within AEC 5 (Inferred location of PAH site contamination):

- At design stages, the primary strategy will be to redesign these drainage features to avoid and minimise disturbance of the contaminated layer of PAH impacted fill soils below 0.3m below ground level (refer to Figure 4, Appendix A). At the time of this RAP, Manildra were seeking to redesign/relocate the diversion swale away from this portion of the Site.

- Where unable to avoid disturbance, shallow excavations which expose the layer of Unit 1D (Fill within the inferred location of PAH contamination) are required to be carried out to a depth enabling replacement of minimum 0.3m thick 'clean' cover. The objective will be to restore the same minimum depth cover as existing over the identified Unit 1D (Fill) layer, and beneath proposed development features (i.e. diversion swale, service road)
- Fill soils excavated from Unit 1D (Fill within inferred location of PAH contamination) are required to be visually screened and undergo validation sampling to assess their quality (including PAHs) and suitability for unrestricted reuse (Section 8.3.2). 'Contaminated' soils will be restricted for reuse to containment areas.

7.6.4 Onsite containment areas

Preliminary considerations on the proposed locations and requirements of onsite containment areas are outlined in the sections below. These may be subject to change based on the outcomes of review and development during consultation with the landowner (NSW Ports). Updated and/or confirmed details on requirements for onsite containment would be documented within subsequent revision of this RAP or validation report. Any changes are to follow the general principles as described in the following sections.

Proposed onsite containment areas are shown on Figure 5, Appendix A.

7.6.4.1 Location and depth requirements

Onsite containment areas are required to be confirmed based on project design requirements. Preliminary areas have been identified and are described below. The location and depth of onsite containment areas will be considered based on the following aspects and general criteria. Containment areas will:

- Be in general fill areas (i.e. not within areas of proposed cut)
- Be beneath proposed paved areas
- Be in non-structural fill areas (this can be permitted but subject to assessment of geotechnical suitability)
- Include a capping profile made of non-contaminated material with a minimum covering (refer to Section 7.6.4.3)
- At a minimum be able to accommodate 0.5m thickness (on average) of impacted soil to achieve sufficient capacity (refer to Section 7.6.4.2)
- Avoiding areas of buried utilities and structures (i.e. pipework tanks). Alternatively, dedicated service conduits free of impacted material will be incorporated (Refer to Section 7.6.4.4).
- Be designed so that impacted soils are not placed in proximity to or below groundwater table (i.e. no deeper than 1.5m depth or below 1m AHD whichever is shallower)
- Avoid areas immediately adjacent to surface water (i.e. at least 10m from stormwater channel and harbour). This set back requirement may be reduced where fill is placed against a suitably designed impermeable bund.
- Be in defined and surveyed areas able to be accessed/relocated in future by the landowner (Refer to Section 7.6.4.5)
- Specifically, 'friable asbestos' impacted soils (where applicable) should be placed together, kept separate from other soils and placed immediately within the pre-prepared containment area so as to reduce the need for temporary stockpiling and increased exposure from generation of airborne dusts during materials handling.

Based on discussions with Manildra, four potential onsite containment areas have been identified and shown on Figure 5, Appendix A. These include:

- Area A (550m^2) – Beneath proposed office and workshop – This is a preferred location in terms of the above criteria
- Area B (650m^2) – Beneath proposed tank bund area – This area is least accessible, but generally satisfies the remaining criteria
- Area C (550 m^2) – Adjacent existing filled terrain embankment within a constructed cell – This area would be above ground level adjacent existing filled terrain and suitable constructed bund adjacent the existing stormwater channel. Except for closer proximity to stormwater channel, this generally satisfies the remaining criteria.

- Area D (250m^2) (*Contingency only*) – Beneath hardstand areas adjacent to harbour – This area is noted to be close in proximity to surface water and groundwater receptors and is unlikely to be suitable/practical for soil contaminants of heavy metals and PAHs. This area is nominated as contingency only for validated soils with asbestos impacted soils only.

7.6.4.2 Required capacity

The onsite containment area capacity requirements have been assessed at a preliminary level based on estimated calculations of surplus spoil material volumes.

Table F1, Appendix F includes a calculations sheet of surplus spoil material volumes based on assumed excavation dimensions and geometry of proposed 'deep' excavations, (subject to confirmation). Shallow excavations during site recontouring (i.e. cut to fill) have been excluded from the calculations sheet, assuming that soils are 'uncontaminated'. In summary:

- Estimated volume of surplus spoil material is approximately up to 1,200m^3 surplus spoil material generated from deeper excavations.
- Estimated volume of 'contaminated' spoil material (i.e. requiring containment) is approximately 600m^3 based on assumed proportion of 50% of all spoil generated. This was a conservative assumption made based on Site characterisation in Section 3, and in discussions with Manildra regarding the further opportunities for contamination management as outlined within the contingency plan (Section 7.11).
- Assuming approximately 50% of surplus spoil is 'contaminated', the required containment area capacity would be approximately up to 1,200m^2 assuming an average 'contaminated fill' thickness of 0.5m.

Based on the above preliminary estimates, the required containment area capacity would be approximately up to 1,200m^2 assuming an average 'contaminated fill' thickness of 0.5m, noting this area may change subject to actual depth requirements and other constraints. It is expected that this capacity may be achieved where 'uncontaminated' soils (including selected fill and natural) are able to be segregated for unrestricted reuse, thus reducing surplus spoil volume for onsite containment.

- A preferred combination of Area A, Area B and Area C (Combined area 1,750m^2) is expected to have sufficient containment area capacity. If required, Area B (second preference) would provide contingency areas.
- Where additional capacity is required during construction phase, Area D (least preferred) would provide additional contingency onsite containment areas. Due to proximity to harbour foreshore, Area D contingency area may be used for 'asbestos only' contaminated soils which a validated suitable for other contaminants of concern.

It is noted the proposed containment areas in this RAP are subject to changes (size, dimensions and layout) based on further design changes and Site earthworks requirements.

7.6.4.3 Minimum capping profile requirements

The cap on this site is primarily to provide a separation layer between users and the contamination in a heavy industrial setting and prevent future access and disturbance. Considering the Site will mostly be comprised of a paved and hardstand final cover, SMEC recommend the capping profile be made of non-contaminated material with a minimum covering as follows:

- In paved areas (e.g. asphalt/concrete) – minimum 0.3m below finished level (with a marker layer) (thicker if design levels permit)
- Hardstand areas – minimum 0.5m below finished level with a marker layer
- Where filling capacities allow, thicker caps greater than minimum 0.5m below finished level will be designed to reduce the future likelihood of needing to intersect impacted material due to maintenance requirements.

A geotextile marker layer is required to provide warning of presence of soil contamination and provide full coverage across the containment area. The selected geotextile should be water permeable, high visibility, and durable for the expected lifespan. Alternatively, a layer of crushed rock above contaminated soils may be used as a visible marker layer. Other aspects such as geotechnical suitability for the proposed areas are required to be assessed.

7.6.4.4 Accessibility to buried utilities

A brief review of Dial Before You Dig drawings shows the indicated onsite containment areas are typically away from existing utilities, except for communications cable (Telstra, and NBN, possibly redundant) indicated within Area A near the boundary of the sewage pump station.

A review of proposed development drawings shows proposed utilities including:

- Area A: Proposed rainwater pipeline beneath proposed office and workshop adjacent the Site boundary. Other potential utilities drawings (i.e. comms, electrical, sewer) were not made available at the time of this RAP revision, albeit likely to be required at Area A. The possibility of overhead connections to utilities remains to be confirmed.
- Area B and Area C: No proposed or existing utilities are present within these areas.
- Area D: Proposed stormwater pipework, gross pollutant trap and associated structures are within Area D near the harbour foreshore

As recommended by WA DoH (2009), SMEC recommend further consideration be given to location, size and layout of existing/future buried utilities within the onsite containment area (particularly Area A) to maintain accessibility to these utilities for future repairs/maintenance.

7.6.4.5 Survey

Upon completion, a survey of the actual position of onsite containment area(s) will be carried out by a registered Surveyor. The survey will include easting, northing and reduced levels at each of the corners of the cell (additional locations for irregular features) to an anticipated accuracy of about ±0.1 m referenced to the Map Grid of Australia (MGA2020). The containment area location details and diagram are required to be included within validation reports and long-term environmental management plan (LTEMP). The containment area contaminants of concern (including, for example, where 'friable' asbestos contaminated soils are buried) are required to be specified in the LTEMP.

7.7 Offsite disposal (Asbestos waste)

Bonded asbestos waste removed from surface and/or excavated contaminated soils excavated within the proposed remediation extents will require disposal offsite to a licensed solid waste facility.

Bonded asbestos waste must be removed in whole pieces where possible and double wrapped in 0.2mm thick plastic bags and sealed with tape and adequately labelled. The plastic wrapped waste should then be loaded onto a truck for off-site disposal.

The waste classification of bonded asbestos pre-classifies as 'Asbestos Waste (special waste)' in accordance with NSW EPA (2014) Waste classification guidelines, Part 1 Classifying waste. Where bonded asbestos is intermixed with soils, the soil waste would need to be chemically assessed prior to disposal offsite to a licensed waste facility.

Potential facilities licensed to accept the waste materials (including potential asbestos wastes) would be confirmed by the remediation contractor. All waste disposal documentation and consignments will be retained for inclusion in the validation report.

7.8 Water in excavations

If rainwater accumulates within the excavation prior to the completion of remedial works, this will be disposed offsite appropriately which may include:

- Disposal via a licensed liquid waste contractor to an appropriate facility
- Disposal to stormwater under relevant guidelines and approval from Council or relevant Authority with any supporting testing and monitoring requirements.

All waste tracking and disposal dockets will be kept for inclusion in the validation report.

Groundwater ingress into deep excavations (Excavations 1 and Excavation 2) will not be removed noting high permeability sandy soils. The exception is for Excavation 3 where a dewatering strategy will be implemented as documented within the Groundwater Assessment and Management Report (SMEC, 2022c).

7.9 Excavation backfilling (as required)

Deep excavations are expected to generate surplus spoil, with potential to be reused as backfill subject to validation. Shallow excavations involving site recontouring are expected to require additional backfill, noting the bulk earthworks plan requires approximately 1,000m^3 additional fill to achieve the design Site level (refer to Section 1.3). This earthworks balance shortfall may be supplemented by:

- Approximately 650m^3 surplus excavated materials which are expected to be generated from pipeline route excavations (refer to Table F1, Appendix F)
- Balance to be imported fill.

The following will apply to excavation backfilling:

- Where 'uncontaminated' soils are to be reused as backfill, no backfilling will be permitted until the receipt of validation results which have met adopted remediation criteria. Validation of imported material is further discussed in Section 8.3.2.
- Where 'contaminated' soils are to be placed within onsite containment areas, backfilling must adhere to the minimum capping profile requirements including adequate cover and placement of marker layers (refer to details within Section 7.6.4).
- Imported material will be assessed suitable for use on the Site from a contamination and geotechnical perspective prior to use. Validation of imported material is further discussed in Section 8.3.3.
- The excavations will be backfilled and compacted to a standard acceptable for the proposed development.

Copies of all imported materials dockets will be retained to confirm the source, type, and quantities of materials for inclusion in the validation report.

7.10 Unexpected finds

Unexpected finds of potential contamination onsite may be identified by visual appearance and/or olfactory evidence during earthworks. An unexpected finds protocol has been developed and is included in Appendix E which will be followed in the event of an unexpected find.

Contamination issues already identified at the Site (e.g. trace occurrences of bonded ACM in soil) will not be regarded as unexpected finds and can be managed via the methods described in this RAP.

7.11 Contingency plan

The proposed remediation option of onsite containment and long-term management strategy has a high likelihood of meeting the remediation goals and it would be unusual for this method not to be successful. Alternatives are not considered warranted at this stage. Should the findings of additional investigations carried out result in a material change to the remedial strategy, this RAP would be amended for suitable alternative. These changes have the potential to include:

- Avoiding ground disturbance through amending design levels (where practicable)
- Excavation and offsite disposal of contaminated soils unsuitable for onsite reuse or containment.

Any changes to remedial strategy would be made in consultation with the landowner NSW Ports or TfNSW (as relevant) and be documented within a subsequent revision of this RAP.

7.12 Remediation schedule

A remediation schedule will be developed by the remediation contractor based on their work methodology.

8 Validation Plan

8.1 Data Quality Objectives

Data quality objectives (DQO) were developed for this project and are based on the requirements described in ASC NEPM (1999). Data Quality Indicators (DQIs) are included in Appendix G.

Step 1 State the problem

The primary objectives of the validation are to confirm that areas identified as requiring remediation have been successfully remediated.

The main considerations are:

- How many samples should be collected?
- What sample layout should be used to achieve the above objectives?
- What analytes should be tested?

Step 2 Identify the decisions / goal of the study

As per the remediation goal in Section 5.1.

Step 3 Identify information inputs

The following are the information inputs for the validation:

- A review of previous reports undertaken at the Site
- Field observations
- Laboratory results
- Applicable NSW EPA endorsed guidelines
- Data quality indicators and data validation.

Step 4 Define the study boundaries

Horizontally, the study boundaries are the defined by the extent of the earthwork's activities within the Site boundary as shown on Figure 5, Appendix A. Remaining undisturbed areas within the Site boundary are excluded.

Vertically, the study boundary is defined as the depth of the earthworks activities which is expected to vary from 0.5m to 4.5m depth.

Step 5 Develop the analytical approach (decision rule)

The decision rule for soil will be as follows:

- If contaminant concentrations for each sample are below the remediation criteria, then soils will be 'uncontaminated' and permitted for unrestricted reuse within the Site.
- Exceedances outside the above will consider the soils to be 'contaminated' and restricted to reuse only within containment areas where they will be covered by a suitable cap and managed under a Long-Term Environmental Management Plan.

Step 6 Specify performance or acceptance criteria

We have assumed the following to be true in the absence of contrary evidence (i.e. the null hypothesis):

- Contamination at the Site currently poses a potential risk to human and/or environmental receptors.

The possibility exists of making the following decision errors based on the data obtained during this investigation:

- Type 1 error – Deciding the above null hypothesis is false, when it is true.
- Type 2 error – Deciding the above null hypothesis is true, when it is false.

The consequence of making a Type 1 error is more detrimental as it can result in adverse consequences or may include material impact to human and environmental health. The consequence of making a Type 2 error may result in an overly conservative assessment of risk and unnecessary expense of additional remediation.

The potential for decision errors will be minimised by completing a robust quality control program and by completing an investigation that has an appropriate sampling and analytical density for the purposes of the investigation. The QA/QC program will conclude if the data collected is useable, partially useable with some limitations, or unusable in forming conclusions to the assessment. The assessment will be carried out as per the DQIs (completeness, comparability, representativeness, precision and accuracy) in Appendix G.

Step 7 Optimise the design for obtaining data

Sampling will be carried out in accordance with the validation plan in Section 8.3.

8.2 Remediation criteria

8.2.1 General

Remediation criteria has been selected from investigation levels from the following references:

- The National Environment Protection (Assessment of Site Contamination) Measure (ASC NEPM 1999)
- Friebel and Nadebaum (2011) CRC Care Technical Report No. 10 – Health Screening Levels for Petroleum Hydrocarbons in Soil and Groundwater.

ASC NEPM requires consideration be given to Health-based Investigation Levels (HIL), Health-based Screening Levels (HSL) for petroleum hydrocarbons, Ecological Investigation Levels (EIL), Ecological Screening Levels (ESL) for petroleum hydrocarbons, Management Limits, and aesthetic issues.

At this stage, the driver for remediation on this Site is heavy metals (lead, arsenic), bonded asbestos (except for single location of 'friable asbestos' TP27) and polycyclic aromatic hydrocarbons noting the previous investigations did not identified exceedances of other contaminants of potential concern. Other potential contaminants of concern may be encountered as unexpected finds or during additional stages of investigation as part of this RAP (Section 6). The adopted relevant remediation criteria include HILs, EILs and aesthetic criteria as outlined below.

8.2.2 Human health criteria

Health investigation levels (HIL) are scientifically based, generic assessment criteria designed to be used in the first stage (Tier 1 or 'screening') of an assessment of potential risks to human health from chronic exposure to contaminants. Soil HILs apply to the first three metres below the surface for residential use. They are intentionally conservative and are based on a reasonable worst-case scenario for four generic land use settings.

The relevance of Health Screening Levels (HSLs) depends upon potential petroleum hydrocarbon contamination. HSLs also consider vapour intrusion for chemicals in groundwater, and soil-vapour.

Based on the assumed development details, HIL D criteria (commercial/industrial) is considered relevant. Adopted human health Site assessment criteria for this Site is included within previous results in Appendix B and sourced from NEPM (1999) Schedule B1:

- NEPM (1999) Table 1A (1) Health-based investigation levels - Commercial / Industrial (HIL D)
- NEPM (1999) Table 1A (3) Soil HSLs for vapour intrusion - Commercial / Industrial (HSL D)

In addition, adopted assessment criteria for assessing the soil contaminants have been sourced from CRC Care Technical Report No. 10 (Friebel and Nadebaum 2011):

- Table B3 Soil HSLs for vapour intrusion - Intrusive maintenance worker
- Table B4 Soil HSL for direct contact - Commercial / Industrial (HSL D) and Intrusive maintenance worker

Based on the proposed development, HIL D criteria (commercial/industrial) is considered relevant for this Site.

8.2.3 Ecological criteria

Ecological investigation levels (EILs) are relevant where ecological receptors are likely to be present and exposure pathways are complete.

In majority of the areas of the Site, ecological soil criteria are not applicable considering the surface will be mostly paved or hardstand. Minor exceptions to this include:

- A proposed narrow landscaped area (5m buffer) adjacent to Foreshore Road.
- Batter slopes of the proposed service road adjacent to the western side of the stormwater channel. It is understood these are to be permanently stabilised with grass.

Excavated fill soils are unlikely to be reused within these portions of the Site, which would consist of imported fill soils suitable for growing media application.

Alternatively, if reuse of excavated topsoils from the pipeline route is considered, ecological criteria will need to be derived and assessed by the environmental consultant. Site specific EIL input values should be calculated by incorporating soil physiochemical parameters (% clay, pH, and CEC) of a sample of fill material.

8.2.4 Management limits

Management Limits have been considered as investigation levels. The purpose of these is to avoid or minimise potential effects of petroleum hydrocarbons. The ASC NEPM Schedule B (1) identifies these effects as:

- Formation of observable light non-aqueous phase liquids (LNAPL)
- Fire and explosive hazards
- Effects on buried infrastructure.

8.2.5 Asbestos criteria

The adopted Site screening level in accordance with NEPM (1999) includes no visible asbestos for surface soil. From preliminary investigation, SMEC adopted asbestos criteria from WA DoH (2009) guidelines and NEPM (1999) HSL Commercial/industrial D applicable for sites contaminated with 'bonded ACM' only. *This assumption is subject to the findings of additional investigations confirming the nature of asbestos at the Site.*

During excavation activities, Site soils will be assessed for suitability for reuse with respect to health screening levels adopted from NEPM (1999) HSL Commercial/industrial D including:

- 0.05% w/w - Bonded ACM
- 0.001 %w/w – FA and AF (friable asbestos)
- No visible asbestos at the ground surface

Upon completion of earthworks activities (including backfilling), the Site will be assessed for effective validation including:

- ACM contaminated soils will be covered with minimum capping profile of uncontaminated soils and visible marker layer (as per requirements in 7.6.4)
- No visible ACM on surface of final level of soils within the Site boundary.

The Site characterisation identified primarily bonded ACM within some areas of fill soils, except for a single location (TP27) noted to contain 'loose asbestos fibre bundles' within fill soils. Additional WHS controls precautions will be adopted for the whole of Excavation 1 and shallow earthworks cuts within a minimum diameter of 31m around TP27. Additionally, as a precaution, asbestos airborne fibre monitoring will be carried out during initial days of bulk earthworks in non-friable areas – refer to 9.1.10.2.

In accordance with NEPM (1999), assessment for the presence/absence of free fibres is only required if observations of greater than 10% of the total bonded ACM in 'poor' condition (i.e. that is, present as small pieces less than 7mm x 7mm and/or can be crushed/crumbled with hand pressure, considered to be friable). Where friable asbestos is suspected/detected during construction, a further assessment would be required to quantify the risks to sensitive receptors.

8.2.6 Aesthetic criteria

Aesthetic criteria are not considered relevant for a commercial/industrial land use and noting most areas will be covered by pavements/hardstand areas.

8.2.7 Adopted remediation Criteria

The relevant criteria for additional investigation will be consistent with the preliminary contamination investigation (2021a). Adopted human health Site assessment criteria for this Site is included within previous soil results table in Appendix B and sourced from NEPM (1999) Schedule B1.

The relevant remediation criteria for known contaminants are summarised in Table 8-1 and the adopted criteria selected is the lowest of all relevant criteria.

Table 8-1 Remediation Criteria

Contaminant	HIL-D / HSL-D	Adopted Criteria
Arsenic	3,000	3,000
Lead	1,500	1,500
Benzo(a)pyrene (as TEQ)	40	40
Sum of PAHs	4,000	4,000
Asbestos (bonded ACM)	<0.05% w/w Bonded ACM 0.001% w/w/ AF and FA (friable asbestos No visible ACM at the surface	Refer to Section 8.2.5

Note: All concentrations are in mg/kg

8.3 Validation Plan

Validation works will be carried out with reference to relevant sections of ASC NEPM (1999) and NSW EPA guidelines.

8.3.1 Validation of excavations

Validation of excavations are not proposed as part of this RAP, noting excavations are not being carried out primarily for remediation purposes.

Visual assessment of excavations will be carried out to check for evidence of contamination in the walls and base (e.g. ACM). If evidence of potential contamination is observed, then photographs/field documentation will be noted and/or samples will be collected to confirm suspect zones/material.

Before clearance is granted for an asbestos work area to be re-entered, there must be a thorough clearance inspection of the final surface.

The clearance inspection must be conducted by a competent person who is independent from the person responsible for the removal work. The protective barrier fence between the asbestos work area and public areas shall remain intact until completion of all asbestos removal work and successful completion of the clearance inspection.

8.3.2 Validation of spoil materials

Excavated spoil material will be visually assessed during excavation and temporarily stockpiled adjacent to the excavations. Validation sampling of spoil will be undertaken in general accordance within WA DoH (2009) Guidelines (refer to Table 7 Summary of stockpile sampling method).

Validation of spoil materials will include:

- Visually inspect the surface of the stockpile for presence of bonded ACM.
- Soil sampling will be undertaken evenly through the stockpile in accordance with sampling frequency outlined within Table 8-2.
- Soil sampling for bonded ACM will be undertaken using ‘gravimetric sampling’ techniques including includes:
  - Collection of one 10L soil sample from each sampling location
  - Weighing the weight of the 10L sample

- Field screening by sieving via 7mm aperture or spreading out on coloured plastic
- Collection of suspected ACM fragments retained on sieve and record condition
- Weighing of identified bonded ACM to calculate asbestos soil concentration (at the laboratory)
- Collection of a 500ml sub sample of soil from the sample location (not from the sieved material)
- Submission of collected samples for laboratory analysis in accordance with WA DoH (2009)
- Recording presence/absence of ACM on field logs and sample summary registers.

The concentration of asbestos in soil for bonded ACM were calculated using the principals of the formula in the WA DoH (2009) Guidelines:

- Asbestos in soil (% w/w)= (Asbestos content (%)×Bonded ACM weight(g))/(Soil Volume (L) x Soil Dry Density (g/L))

If the stockpiles are visually assessed to be suitable for validation sampling (i.e. no ACM observed), soil samples will be collected from the given stockpile volume. The validation purpose is to distinguish soils impacted with contaminants of potential concern for either unrestricted onsite reuse or restricted to onsite containment.

Validation sampling will be as per Table 8-2:

Table 8-2 Validation Sampling Methodology

Location	Validation	Analysis
Stockpiled fill	Fill stockpiles 1 soil sample every 25m^3 Minimum of 3 samples for stockpiles less than 75m^3	General fill (minimum – note 1): • Heavy metals (Arsenic and lead) • Asbestos (ACM and AF/FA) (w/w %) Unit 1D soils only within western portion of main terminal Site only: • PAHs
Note 1 – Minimum analysis specified noting additional contaminants of potential concern may be included subject to Site observations of suspected contamination in accordance with unexpected finds protocol.		

8.3.3 Validation of imported fill

If imported fill is required to backfill excavations as part of the excavations works of the project, then the material will comply with the following:

- The material must be permitted to be transported to Site within the provisions of the POEO Act. This requires the material to (at a minimum):
  - Meet the definition of Virgin Excavated Natural Material (VENM); or
  - Meet the requirements of a suitable Resource Recovery Order and Exemption (e.g. The Excavated Natural Material Order and Exemption); or
  - Meet an EPA approved site-specific Resource Recovery Order and Exemption
- The material must be suitable for the proposed development and land use.

The environmental consultant will review the source and type of material to be imported to Site and confirm there is adequate evidence of the suitability of the material for use on the Site with respect to the above. The need for additional verification sampling will be based on this review and to be assessed by the environmental consultant at the time. At a minimum, the environmental consultant will observe the material delivery to Site to check that it is consistent with the material source and documentation.

Documentation with adequate validation of the imported fill will be included in the validation report including delivery dockets.

8.4 Validation Report

At the completion of the field activities, a validation report will be prepared in accordance with relevant sections of ASC NEPM (1999) and NSW EPA (2020) guidelines. The report will:

- Describe the remedial works undertaken, the validation carried out and the final condition of the Site

- Confirm that the Site complies with the set remediation criteria
- Include information confirming (as relevant) that EPA and other regulatory authorities' licence conditions and approvals have been met
- Documentary evidence to confirm that waste management has been carried out in accordance with relevant regulatory requirements.

8.5 Long term Environmental Management Plan

A long-term Environmental Management Plan (LTEMP) will be prepared in accordance with NSW EPA (2020) Consultants Reporting on contaminated land, Contaminated land guidelines.

This plan will be appended to and form part of the overarching Environmental Management Plan required by NSW Ports lease agreement as part of Manildra's environmental obligation (Ref 25.9 Environmental Management Plan). This will act as a notification mechanism for recording the existence of the LTEMP.

NSW EPA (2017) Site Auditor Guidelines NSW EPA (Third edition) indicates that an LTEMP which includes a proposed containment area should recommend '*a notification mechanism to ensure that the capped and/or contained areas are protected from any unintentional or uncontrolled disturbance that could breach the integrity of the physical barrier*.' SMEC recommend that NSW Ports and Manildra will record the existence of the LTEMP onto their property information systems to enforce the LTEMP.

9 Site management requirements

9.1 Site management

9.1.1 General

The appointed remediation contractor will prepare relevant documentation to manage environmental issues during the works, such as in a site-specific Construction Environmental Management Plan (CEMP). Any other requirements imposed by Council or relevant planning authority to comply with development consent conditions will also be addressed and take precedence over general measures described in subsequent sections. The CEMP will provide measures to reduce the potential for adverse impacts to health or the environment from items including (but not limited to):

- Site security and signage
- Stormwater, erosion, and sediment
- Asbestos removal
- Soil management and material tracking
- Vegetation/tree management
- Noise
- Dust
- Odour
- Traffic.

The hazards associated with unacceptable exposure to potential contamination during works will be managed as follows:

- Work to be performed and overseen by a suitably qualified remediation contractor
- Establishing environmental controls
- Management of soils including excavation and off-site disposal
- Implementing environmental monitoring during the development.

The following sections provide a guide for the remediation contractor to develop the CEMP. The remediation contractor will be responsible for administering site controls and monitoring as per the approved CEMP.

9.1.2 Site Security and Signage

The remediation contractor will provide site security through fencing or other means to prevent unauthorised access to the Site and equipment.

Relevant signage in accordance with SafeWork NSW and Australian Standards will be provided to the Site. Contact information will be displayed onsite as per Council requirements.

9.1.3 Vegetation/ tree management

Several mature trees are existing along the boundary with Foreshore Road. Relevant vegetation/trees are to be managed and protected as per the approved design and Council DA consent conditions.

9.1.4 Stormwater, Erosion and Sediment Control

The remedial excavation works are estimated to take place over several weeks. Where practicable, works should be programmed during favourable weather to avoid potential issues with runoff.

Additional care will be undertaken for works along the pipeline route excavations which are in closest proximity to the harbour foreshore and include surrounding asphalt paved areas.

Erosion and sediment controls are to be established at the Site prior to commencement of any site disturbance. These may include silt fencing or other approved measures. These should include preventive measures in nearby street stormwater drains. Adopted measures should also prevent stormwater entering adjacent properties. Controls will be based on Landcom' s, Managing Urban Stormwater – Soils and Construction, 2004.

Due to the proximity to Port Kembla Outer Harbour/stormwater channel, and soil contaminants concentrations, stockpiling areas are required to have at a minimum:

- Silt fencing and/or perimeter bunding along the low side of excavation and around temporary stockpiles, particularly near nearby surface water receptors (i.e. foreshore, stormwater channel)
- Covering of temporary stockpiles with impermeable material (such as builders' plastic) to prevent erosion
- Other approved control measures as deemed appropriate based on Landcom' s, Managing Urban Stormwater – Soils and Construction, 2004.

Adequate monitoring will be carried out of sediment and erosion control measures and documented in the CEMP.

9.1.5 Asbestos removal controls

The following controls will be adopted at a minimum in relation to asbestos removal works as they relate to site management Additional controls are described for health and safety in Section 10.

- The Remediation Contractor/licenced asbestos removalist is to set up appropriate exclusion zones across the work area to define asbestos removal areas. Where practicable 10m exclusion zones should be set up and clearly demarcated with appropriate physical barriers and warning signage
- Care shall be taken in selecting tools for asbestos removal tasks. In addition to having to be suitable for these tasks, all tools shall prevent or minimise the generation and dispersion of airborne asbestos fibres as much as possible.
- An equipment decontamination area is to be set up to wash down equipment entering asbestos impacted areas. This may include excavator (bucket and tracks) and truck wheels (if needed). The form of the decontamination method is to be described in the Asbestos Control Plan prepared by the licenced removalist but may include a small excavated area covered with geofabric and bunding. At works completion the geofabric is to be disposed with other asbestos waste
- No equipment is to be permitted to leave the Site without adequate decontamination
- Dust suppression will be carried out as discussed in Section 9.1.10. For friable asbestos removal only, airborne fibre monitoring will be carried out as discussed in Section 9.1.10.2
- Trucks used for transport of asbestos waste are to be leak proof design. Where this is not provided, trucks are to be lined with 0.2mm plastic sheeting
- Loading of soils onto trucks is to be carried out carefully and supervised so that soil spillage does not occur. Any spillage is to be cleaned up immediately. All loading is to be carried out within the exclusion zone and within the Site boundary
- Trucks used for asbestos disposal are to have automatic load covers so that the driver is not potentially exposed to impacted soils.

9.1.6 Acid Sulfate Soils

Acids sulfate soils (if encountered and disturbed) are subject to additional management measures which are documented within a separate standalone Acid Sulfate Soils Management Plan (SMEC, 2022b).

9.1.7 Soil Management and Material Tracking

All excavated soils are expected to be retained onsite and managed in accordance with this RAP and the following tracking requirements:

- Temporary stockpiling areas (if used) would be designated for the 'contaminated' soils which are segregated from other stockpiles and materials. Signage, flagging and/or hoarding will be used to prevent unintentional mixing or contamination

- Observations will be made of the material during excavation, stockpiling and/or backfilling to check that only those materials approved for unrestricted reuse are reused within the Site
- A material tracking register will be employed.
- The remediation contractor and environmental consultant will be responsible for recording the location of where materials from the source are placed in accordance with environmental consultant. Soil management and material tracking will be documented via the following methods:
- Stockpile diagrams
- Site photographs
- Materials tracking spreadsheet.

Documentation will be summarised and included within the validation report.

9.1.7.1 Pipeline route

Surplus excavated materials generated during excavations along the pipeline route would be transported to the main terminal, via Foreshore Road (offsite) in accordance with the conditions of approval and any required permits or licences (Section 7.3). During pipeline route excavations, the following will be carried out:

- Vehicle access to the Site will be stabilised so that access can be gained on/offsite and reduce sediment tracking onto roads
- Excavated 'contaminated' (or unvalidated soils) would be loaded directly into trucks for onsite containment/ temporary stockpiling within the main terminal. The indicative materials transport is shown in Figure 9-1 below.
- All waste/contaminated soil will be loaded into leak-proof trucks with a canopy cover
- Adequate measures will be installed at the Site entry to remove soil from truck wheels before they leave the Site. Suitable methods of soil removal from truck and vehicle tyres entering/exiting the Site may include a cattle grid or designated washdown area
- A material tracking register of all loads leaving the Site boundary, including quantities, number of trucks, truck registrations, and days and times of contaminated soil loading and transfer to the landfill would be kept. The material tracking register would be independently monitored by environmental consultant to demonstrate the effective and complete transportation of excavated spoil via trucks along Foreshore Road (offsite) into the main terminal.

- Beyond the above, materials will not be permitted to leave the Site, except where suitably waste classified for offsite disposal (refer to Section 9.1.8).

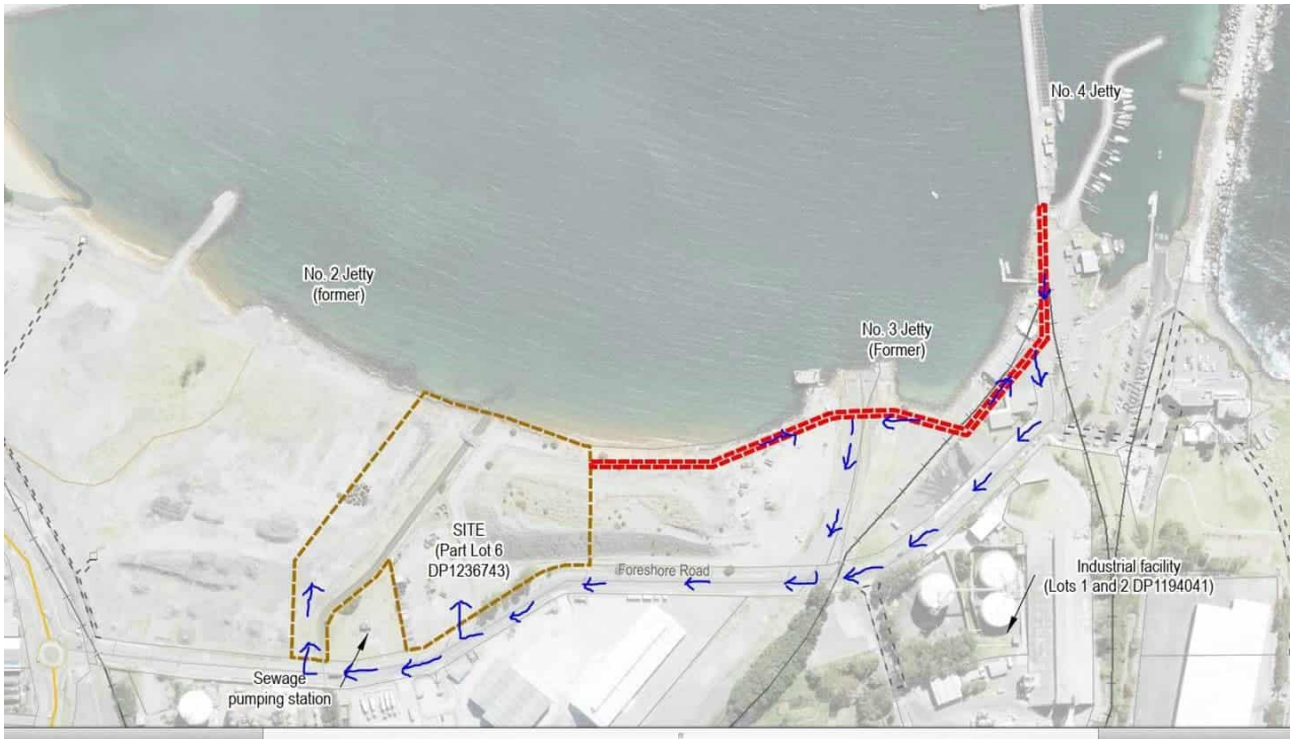

Figure 9-1 Indicative materials transport via Foreshore Road between Pipeline route and Main Terminal

9.1.8 Soil waste disposal (if required)

Should there be insufficient capacity for onsite containment, contaminated soils are required to be taken offsite for disposal to licensed landfill. A soil waste classification will be carried out in accordance with NSW EPA (2014) Waste classification guidelines, Part 1 Classifying Waste.

The following will be carried out:

- Vehicle access to the Site will be stabilised so that access can be gained on/offsite and reduce sediment tracking onto roads
- Excavated contaminated soils should be loaded directly into trucks for offsite disposal where further waste classification is not deemed necessary
- All waste/contaminated soil will be loaded into leak-proof trucks with a canopy cover
- Adequate measures will be installed at the Site entry to remove soil from truck wheels before they leave the Site. Suitable methods of soil removal from truck and vehicle tyres entering/exiting the Site may include a cattle grid or designated washdown area
- A register of all loads leaving the Site, including quantities, number of trucks, truck registrations, and days and times of contaminated soil loading and transfer to the landfill should be kept
- Waste disposal will be compliant with The Protection of the Environment Operations (Waste) Regulation 2014 (the Waste Regulation). The Waste Regulation makes it an offence to transport waste generated in NSW by motor vehicle for disposal more than 150 kilometres from the place of generation, unless the waste is transported to one of the two nearest lawful disposal facilities to the place of generation (even if that facility is located more than 150 kilometres from its place of generation).
- Documentation of disposal and tracking will be as described in Section 9.1.7
- Temporary stockpiling should be avoided to prevent double handling and increase risk of generating dust
- Stockpiles if created will require additional sediment and erosions controls as per Section 9.1.4

- Stockpiling or spillage of spoil onto areas not requiring remediation/management should be avoided. If this occurs it should be cleaned up as quickly as possible. The environmental consultant will assess the need to validate the surface of un-remediated areas based on the manner of the remedial works.

9.1.9 Noise

As the Site is in industrial harbour foreshore areas at some distance from nearest residential areas (>1km), noise is unlikely to pose a constraint on the works. All remedial works will be carried out in compliance with Council regulations on noise and conditions of approval, including any restrictions on working days/hours.

9.1.10 Dust

9.1.10.1 General

Dust will be controlled during the remedial works so that there is no observable dust movement offsite and to prevent airborne fibres. The following management measures will be implemented to prevent dust impacts:

- High density weave shade cloth will be placed around the remediation work zone
- Visual monitoring will be carried out and dust suppression such as light water sprays will be used to supress dust during excavation and loading. Dust is a potential transport mechanism for contaminated material to move from site and impact adjacent public receptors, therefore it is important that adequate controls are in place. Water sprays should be controlled so that excessive water is not applied where soil becomes saturated and create a risk of runoff.
- All 'contaminated' soil stockpiles are required to be temporary stored at a designated area onsite within asbestos exclusions area. Stockpiles will be placed onto a suitable hard surface or polyethylene sheeting (2-ply HDPE) and covered with similar sheeting, tapped and weighted down.
- In the event nuisance dust is generated, works will stop, and dust suppression techniques reviewed, with alternative dust suppression techniques applied.

9.1.10.2 Airborne Fibre Monitoring

Based on investigation findings by SMEC (2021a, 2021b and 2022), asbestos at the Site is assumed to be primarily bonded ACM only in good condition, except in the vicinity of test location (TP27) which would be considered 'friable' due to presence of loose asbestos fibre bundles. The following is proposed:

- For Excavation 1 and shallow earthworks cuts within a minimum diameter of 31m around TP27), airborne fibre monitoring will be carried out for excavation and removal of 'friable asbestos' impacted soils.
- For soil excavations across the remainder of the Site, bonded asbestos removal works would generally not be carried out with airborne fibre monitoring. Airborne fibre monitoring is not a mandatory requirement to be carried out during asbestos removal works in accordance with SafeWork NSW (2019) Code of Practice. Airborne fibre monitoring would be adopted out as follows:
  - Should evidence of friable asbestos be identified then additional controls will be required including a Class A removalist and airborne fibre monitoring.
  - As an additional precaution, we recommend that during the initial first 3-5 days of bulk earthworks disturbing Unit 1B (Fill variable), airborne fibre monitoring be carried out within and in close proximity to the main work zone to assess and demonstrate a suitable work environment with respect to airborne fibres for workers. This should also be repeated during bulk earthworks disturbing general fill in the pipeline route area.

Air monitoring devices will be placed at a minimum of four locations on the boundaries of the designated work areas. The sample collection and analysis will be conducted in accordance with the National Occupational Health and Safety Commission (NOHSC) "Guidance Note on the Membrane Filter Method for Estimating Airborne Asbestos Dust [NOHSC: 3003 (2005)].

The analysis is to be performed by a NATA accredited laboratory. The concentration of fibres at the Site boundaries is to be <0.01fibres/mL of air. Concentrations of asbestos fibres shall be dealt with as follows:

- <0.01 fibres/mL. Action: Continue with control measures;
- Between 0.01 fibres/mL and 0.02 fibres/mL. Action: Review control measures; and

- Greater than or equal to 0.02 fibres/mL. Action: Stop work until the cause of the elevated concentrations is remedied. For work classified as Class A work, the licenced asbestos removalist must order removal work to stop and notify SafeWork NSW immediately if respirable asbestos fibre levels exceed 0.02 fibres/ml in the removal area.

These results will be made available to all onsite employees.

9.1.11 Odour

As volatile contaminants were not previously recorded at elevated concentrations, odour is not likely to be an issue for the Site.

Some strong odours (described as 'sweet phenolic' type) were noted during the site investigations at test pits which intersected Unit 1D (Fill within PAH contamination area) however these occurred at depths beyond proposed disturbance (refer to Figure 4, Appendix A). The contaminants identified were not volatile. If odours are unexpectedly encountered, then contingency measures such as covering soil or use of odour suppressants could be considered.

9.1.12 Traffic

Adequate traffic management controls may need to be employed for the works due to the movements of plant and trucks onto and off Foreshore Road. A suitable traffic management plan may be required by Council.

9.1.13 Community Consultation / Stakeholder Engagement

Neighbouring landowner/occupiers are likely to be informed of the intended remedial works as part of the development application process. There may also be requirements for specific consultation as part of the development consent conditions. At a minimum these conditions should be complied with.

Guidance on community engagement and risk communication remediation advice can be found in:

- National Environment Protection (Assessment of Site Contamination) Amendment Measure 2013 (No. 1). Schedule B8, Guideline on Community Engagement and Risk Communication
- Institute for Sustainable Futures, Step-By-Step Guide for Creating Stakeholder Engagement Plans for Contaminated Sites In NSW

9.1.14 Working Hours

Working hours for onsite remedial works will be completed in accordance with Wollongong City Council requirements and as stated in the final development consent conditions.

10 Work Health and Safety

10.1 Work health and safety requirements

Work health and safety (WHS) considerations of the Site during the remedial works will be the responsibility of the appointed Principal Contractor (which could be the Remediation Contractor). Prior to commencement of remediation works the remediation contractor will develop a site-specific Work Health and Safety Plan. This plan will include Safe Work Method Statements (SWMS) to detail activities to be conducted, associated hazards, an assessment of risk and measures to control the risk.

Work associated with the remediation of the Site will conform, at a minimum, to the requirements of:

- Work Health and Safety Act 2011
- Work Health and Safety Regulation 2017
- Other relevant SafeWork NSW regulations and codes, such as (but not limited to):
- SafeWork NSW (2019) Code of Practice: How to Manage and Control Asbestos in the Workplace
- SafeWork NSW (2019) Code of Practice: How to Safely Remove Asbestos

Typically, the safety plan will contain but not be limited to addressing the following issues:

- Regulatory requirements
- Hazard assessment and control
- Chemical/contaminant hazard control
- Sample and chemical handling procedures
- Personal protective equipment
- Monitoring requirements
- Work zones
- Decontamination procedures
- Training and responsibilities
- Evacuation and emergency response plans
- Contingency plans
- Incident management and reporting.

The plan will be periodically reviewed and updated based on changing activities and Site conditions.

Any subcontractors will prepare their own site-specific SWMS for their activities with consideration of the overall site conditions and hazards.

Visitors to the Site will be required to be inducted to the relevant sections of the plan and sign on.

10.2 Hazard assessment

The safety plan and SWMS will identify health and safety hazards and appropriate controls.

In relation to the chemical contamination that is being remediated, the relevant contaminants that need to be considered in the safety plan are:

- Lead, arsenic
- Asbestos
- Polycyclic aromatic hydrocarbons (PAHs)

The safety plan and SWMS will identify health and safety hazards and appropriate controls.

10.3 Training

The following is recommended for workers (including the asbestos removalist contractor):

- Asbestos awareness training (Nationally recognised training i.e. 10314 NAT Course in Asbestos Awareness, or equivalent)
- Understanding of the nature and extent of site-specific asbestos contamination
- Controls and notifications to be followed
- How to prevent exposure to contamination including:
- Dust control measures
- Handling and disposal procedures
- Selection and use of personal protective equipment and clothing
- Personal and equipment decontamination procedures
- Emergency procedures.

The Principal Contractor shall ensure site specific inductions are carried out familiarise all workers with the requirements outline within this RAP and the site-specific Work Health and Safety Plan.

10.4 Personal protective equipment

Workers should avoid coming into contact with contaminated soils, but where this is not practical, wearing of appropriate personal protective equipment (PPE) will be required. The level of PPE required to control risk of contact with contaminated soil will depend on site conditions, but at a minimum should include the following over and above other PPE:

- P2 class respirator or higher (i.e. minimum half-face, particulate filter (cartridge) respirator for bonded ACM removal)
- P3 class respirator or higher (i.e. minimum full-face, particulate filter (cartridge) respirator for friable asbestos removal)
- Disposable coveralls
- Disposable nitrile gloves
- Safety glasses/goggles
- Lace less work boots or disposable boot covers.

The above will apply within the remediation exclusion zone.

10.4.1 Respiratory protective equipment

The selection use and maintenance of respirators shall be in accordance with AS/NZS1715-1994 Selection Use and Maintenance of Respiratory Protective Devices.

Respirators shall be issued to individuals for their exclusive use. A system of regular cleaning, inspection and maintenance shall be provided for respirators on extended personal issue, and records of all respirators issue and uses shall be established and maintained.

Workers shall receive instruction and training in the correct method of using their respirators, the importance of a correct facial fit and the requirements of the system of regular cleaning, inspection and maintenance.

All workers shall undergo a ‘fit test’ in order to determine their suitability to wear negative pressure respirators. Persons with beards or other facial hair or stubble will not be protected properly by ‘negative pressure’ respirators that require a facial seal, so all asbestos removal workers using respirators that require a facial seal shall be clean-shaven.

All filters used while working with asbestos shall be disposed of as asbestos waste.

10.4.2 Protective clothing and footwear

Protective clothing shall be provided and worn at all times during all work in the asbestos work area prior to the final clearance inspection.

Protective clothing shall be made from materials which provide adequate protection against fibre penetration. Coveralls shall not have external pockets or Velcro fastenings because these features are easily contaminated and difficult to decontaminate.

Disposable coveralls are preferred. They shall never be reused and must be disposed of as asbestos waste.

The use of protective gloves shall be determined by a risk assessment. If significant quantities of asbestos fibres may be present, disposable gloves shall be worn. Protective gloves can be unsuitable, however, if dexterity is required. All gloves used for asbestos removal work must be disposed of as asbestos waste.

Regardless of whether gloves are used, asbestos removal workers must clean their hands and fingernails thoroughly after work.

Appropriate safety footwear (i.e. steel-capped rubber-soled work shoes or gumboots) shall be provided for all asbestos removal workers. This footwear should be lace less, because laces and eyelets are easily contaminated. When not in use, the safety footwear shall be stored upside down to minimise asbestos contamination inside the footwear. Storage facilities shall be provided to allow this.

Safety footwear must be decontaminated at the end of the job and upon leaving the work area or sealed in double bags for use on the next asbestos removal site (but not for any other type of work). Work boots that cannot be effectively decontaminated must be disposed of as asbestos waste.

10.4.3 Decontamination

Decontamination must occur within the remediation work area, whereby all tools and equipment and personal are decontaminated. Asbestos waste bins shall be provided within the asbestos removal area.

The contractor will allow the following (or similar) for personal decontamination:

- A designated area to remove spent PPE
- Lined bin or polyethylene bags for PPE disposal
- Water, containers and brush to wash boots and equipment
- All contaminated materials, including plastic sheeting and PPE etc, must be disposed of as asbestos waste.

10.4.4 Other Hazards

Other common earthworks hazards that require consideration and controls include (but not limited to):

- Underground/overhead utilities (NB There are overhead power lines along Foreshore Road near Site entrance)
- Working around plant and equipment
- Open excavations (including water)
- Heat/cold stress
- Physical hazards.

Other key elements to be covered in SWMS are:

- Consultation and training are to be provided to all workers who may be involved in works that could disturb or be exposed to asbestos
- All workers onsite should have adequate asbestos awareness training
- Daily toolbox meetings are to be carried out including induction into the unexpected finds procedure
- No smoking or eating within contaminated area
- Operators of earthworks plant are to have closed cabins and work within those closed cabins with air conditioning.

11 Conclusions

The remediation options analysis identified that on-site containment and a long-term management strategy is a practical and cost-effective remedial option to address Site contamination encountered/disturbed during redevelopment of the Site. This was driven by the expected volume of ground disturbance and availability of fill areas within the redevelopment design earthworks levels.

Based on preliminary discussions with Manildra, four potential onsite containment areas have been identified noting these are required to be confirmed based on design requirements. Preliminary considerations on the design requirements of onsite containment areas include recommendations for minimum capping profile requirements and accessibility to buried utilities.

SMEC considers the Site can be made suitable for the proposed development if the RAP is implemented. Subject to successful validation, restrictions would only apply to onsite containment areas of the Site if remediation is carried out as per the RAP and the contamination sources and extents are as per the current conceptual site model. Restrictions and ongoing management measures would be documented within a Long-Term Environmental Management Plan.

12 References

ANZG (2018), Australian and New Zealand Guidelines for Fresh and Marine Water Quality, August 2018, accessed 23 March 2021, URL: **http://waterquality.gov.au/anz-guidelines**

ANZECC & ARMCANZ (2000), National Water Quality Management Strategy, Australian and New Zealand Guidelines for Fresh and Marine Water Quality, Protection of Aquatic Ecosystems

Bowman, H.N. and Stewart T.R., Wollongong 1: 50,000 Geological Sheet 9028-1 (1974) Geological Survey of New South Wales, Sydney.

CMPS&F Environmental (1994) MSB Illawarra Ports Authority, Contamination Assessment of Port Kembla Outer Harbour, Vacant Land Parcels (October 1994)

Geological Survey of New South Wales, Department of Mines, Sydney (1985). - Geological Map of Wollongong – Port Hacking, 1:100,000

Friebel and Nadebaum (2011) Health screening levels for petroleum hydrocarbons in soil and groundwater, part 1: Technical development document, Cooperative Research Centre for Contamination Assessment and Remediation of the Environment (CRC CARE Pty Ltd) Technical Report Series No. 10

Government of Western Australia, Department of Health (2021), Guidelines for the Assessment, Remediation and Management of Asbestos Contaminated Sites in Western Australia, July 2021

National Environment Protection (Assessment of Site contamination) Measure 1999

NSW EPA (1995), Sampling Design Guidelines

Office of Environment and Heritage, 2019, Soil Landscapes of Central and Eastern NSW - v2, NSW Office of Environment and Heritage, Sydney.

NSW EPA (2017), Contaminated Land Management, Guidelines for the NSW Site Auditor Scheme (3rd edition), October 2017

NSW EPA (2020), Consultants Reporting on Contaminated Land, Contaminated Land Guidelines, April 2020

NSW Work Health and Safety Regulation 2017

Protection of the Environment Operations (Waste) Regulation 2014

SafeWork NSW (2019) Code of Practice: How to Manage and Control Asbestos in the Workplace

SafeWork NSW (2019) Code of Practice: How to Safely Remove Asbestos

SMEC Australia Pty Ltd (2021a) Preliminary Geotechnical and Contamination Investigation, Part Lot 6 DP 1236743 Foreshore Road, Port Kembla, prepared for Manildra Group Pty Ltd (Ref: 30013038-R01, Rev 2 dated 05 May 2021)

SMEC Australia Pty Ltd (2021b) Detailed Site Investigation, Part of Lot 6 DP1236743 Foreshore Road, Port Kembla, prepared for Manildra Group Pty Ltd, Ref: 30013038-R04, Revision 1, dated 22 December 2021

SMEC Australia Pty Ltd (2022a) Targeted Site Investigation – Pipeline Route, Part of Lot 6 DP1236743 and Part of Part of Lot 2 DP 1182823, Foreshore Road, Port Kembla, prepared for Manildra Group Pty Ltd, Ref: 30013038-R05, Revision 1, dated 02 May 2022

SMEC Australia Pty Ltd (2022b) Acid Sulfate Soils Management Plan, Manildra – Port Kembla Bulk Liquid Terminal, Foreshore Road, Port Kembla, prepared for Manildra Group Pty Ltd, Ref: 30013038-R03, Revision 2, dated 06 May 2022

SMEC Australia Pty Ltd (2022c), Groundwater Assessment and Management Report, Manildra – Port Kembla Bulk Liquid Terminal, Foreshore Road, Port Kembla, prepared for Manildra Group Pty Ltd, Ref: 30013038-R06, Revision 1, dated 26 May 2022

State Environmental Planning Policy No.55 – Remediation of Land, 1998

State Environmental Planning Policy (Three Ports) 2013

TFA Group Pty Ltd (2021), Civil Drawing Set – Issued for Tender, Drawing ref: 20399-C00 to C17, C20 and C21, dated 23.11.21

TFA Group Pty Ltd (2022), Proposed Pipeline Route – D.A Issue, Drawing ref: 20399-DA-P01 to P05, dated 11.03.2022

WA Department of Health 2009, Guidelines for the Assessment, Remediation and Management of Asbestos-contaminated Sites in Western Australia, May 2009

WA Department of Health 2021, Guidelines for the Assessment, Remediation and Management of Asbestos-contaminated Sites in Western Australia, 2021 (*NB This updated revision has not been endorsed by NSW EPA at time of this report*)

Appendix A **Figures**

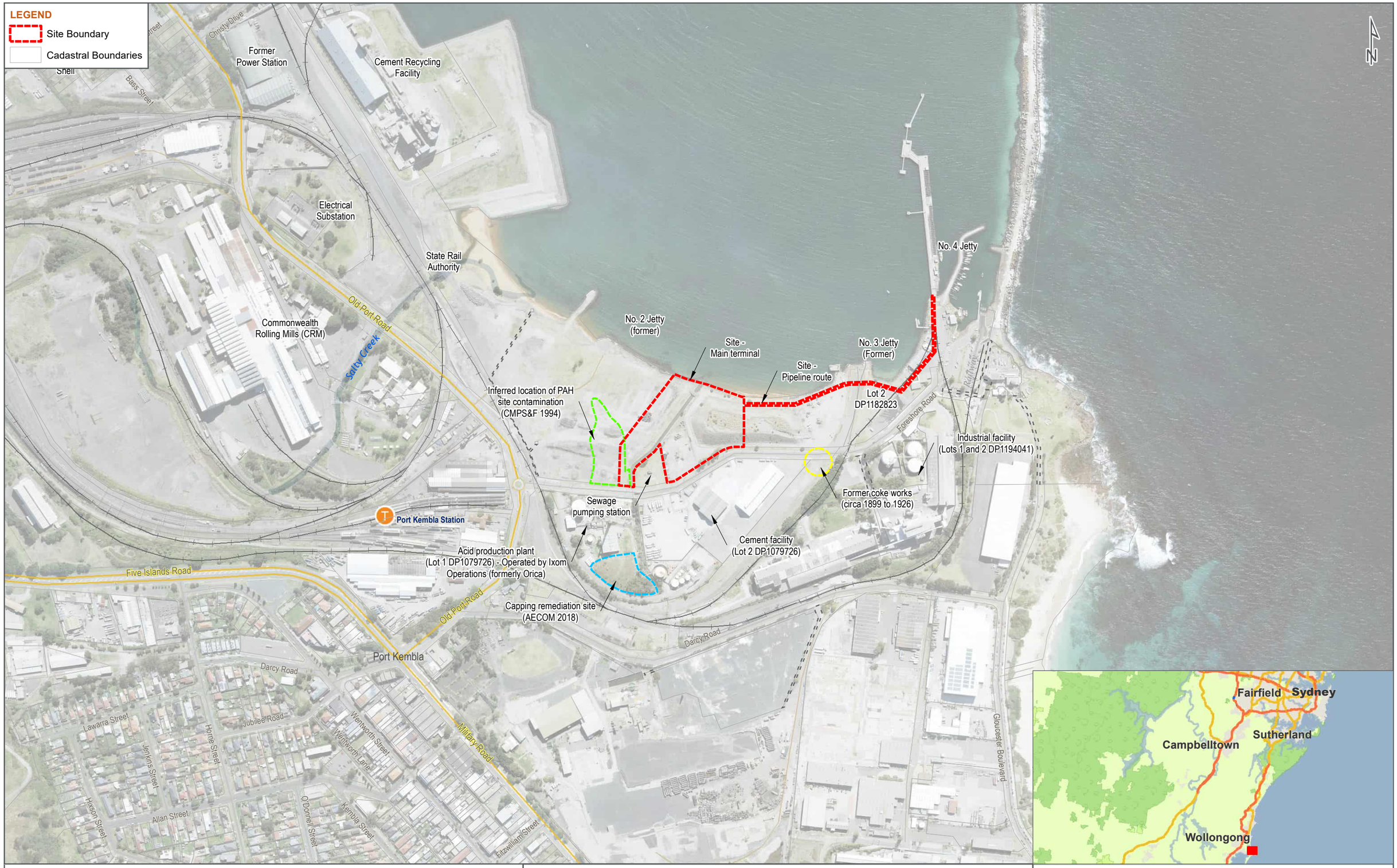

FIG NO. 1	**FIGURE TITLE** Site Locality Plan	**DATE** 04/05/2022	0 25 50 100 150 200 Metres 1:6,000	**PAGE SIZE** A3	**COORDINATE SYSTEM** GDA 1994 MGA Zone 56
PROJECT NO. 30013038	**PROJECT TITLE** Remedial Action Plan Manildra - Port Kembla Bulk Liquid Terminal	**CREATED BY** FA13847	**SOURCES** Roadnet MDS 2020, MetroMap Imagery © Aerometrex Pty Ltd		

© SMEC Australia Pty Ltd 2022.
All Rights Reserved

Disclaimer: While all reasonable care has been taken to ensure the information contained on this map is up to date and accurate, this map contains data from a number of sources - no warranty is given that the information contained on this map is free from error or omission. Any reliance placed on such information shall be at the sole risk of the user. Please verify the accuracy of all information prior to using it. This map is not a design document.

SMEC
Member of the Surbana Jurong Group

Location: V:\Projectz\30013038 - Ethanol Tank Farm, Port Kembla\Maps\RAP\30013038_RAP_F001_SiteLocality.mxd

Last updated by: FA13847 on 4/05/2022 at 11:11

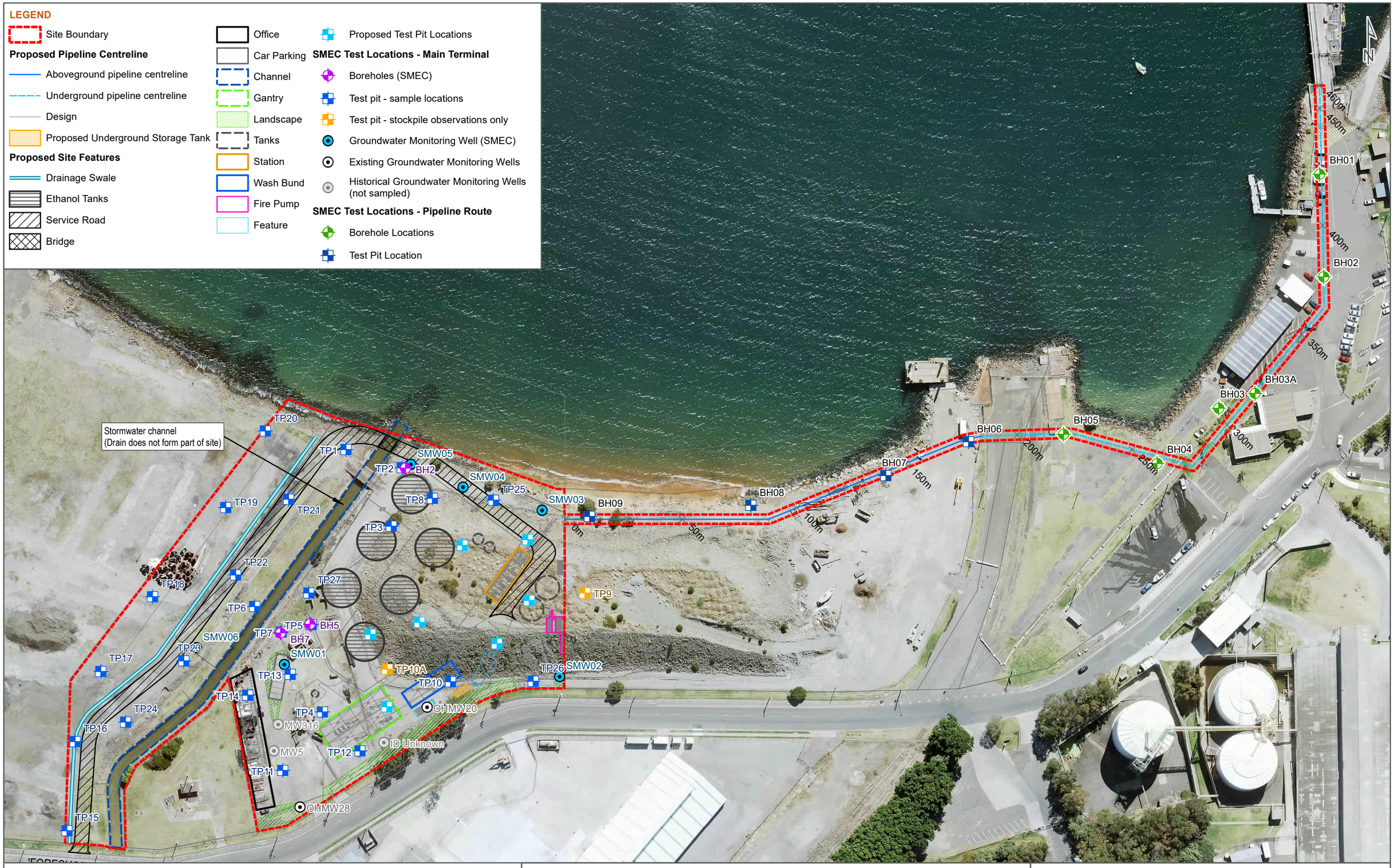

FIG NO. 2	**FIGURE TITLE** Site Layout and Test Location Plan Foreshore Road, Port Kembla	**DATE** 06/05/2022	0 25 50 1:1,500 Metres	**PAGE SIZE** A3	**COORDINATE SYSTEM** GDA 1994 MGA Zone 56
PROJECT NO. 30013038	**PROJECT TITLE** Remedial Action Plan Manildra - Port Kembla Bulk Liquid Terminal	**CREATED BY** FA13847	**SOURCES** Roadnet MDS 2020, Design supplied by client, MetroMap Imagery © Aerometrex Pty Ltd		

© SMEC Australia Pty Ltd 2022.
All Rights Reserved

Disclaimer: While all reasonable care has been taken to ensure the information contained on this map is up to date and accurate, this map contains data from a number of sources - no warranty is given that the information contained on this map is free from error or omission. Any reliance placed on such information shall be at the sole risk of the user. Please verify the accuracy of all information prior to using it. This map is not a design document.

SMEC
Member of the Surbana Jurong Group

Location: V:\Projectz\30013038 - Ethanol Tank Farm, Port Kembla\Maps\RAP\30013038_RAP_F002_SiteLayout.mxd

Last updated by: FA13847 on 6/05/2022 at 11:24

FIG NO. 3

FIGURE TITLE Acid Sulfate Soils Risk Map

DATE 04/05/2022

0 25 50 100
1:3,000 Metres

PAGE SIZE A3

COORDINATE SYSTEM GDA 1994 MGA Zone 56

PROJECT NO. 30013038

PROJECT TITLE Remedial Action Plan
Manildra - Port Kembla Bulk Liquid Terminal

CREATED BY FA13847

SOURCES Roadnet MDS 2020,
MetroMap Imagery © Aerometrex Pty Ltd

© SMEC Australia Pty Ltd 2022.
All Rights Reserved

Disclaimer: While all reasonable care has been taken to ensure the information contained on this map is up to date and accurate, this map contains data from a number of sources - no warranty is given that the information contained on this map is free from error or omission. Any reliance placed on such information shall be at the sole risk of the user. Please verify the accuracy of all information prior to using it. This map is not a design document.

SMEC
Member of the Surbana Jurong Group

Location: V:\Projectz\30013038 - Ethanol Tank Farm, Port Kembla\Maps\RAP\30013038_RAP_F003_AcidSulfate.mxd

Last updated by: FA13847 on 4/05/2022 at 12:02

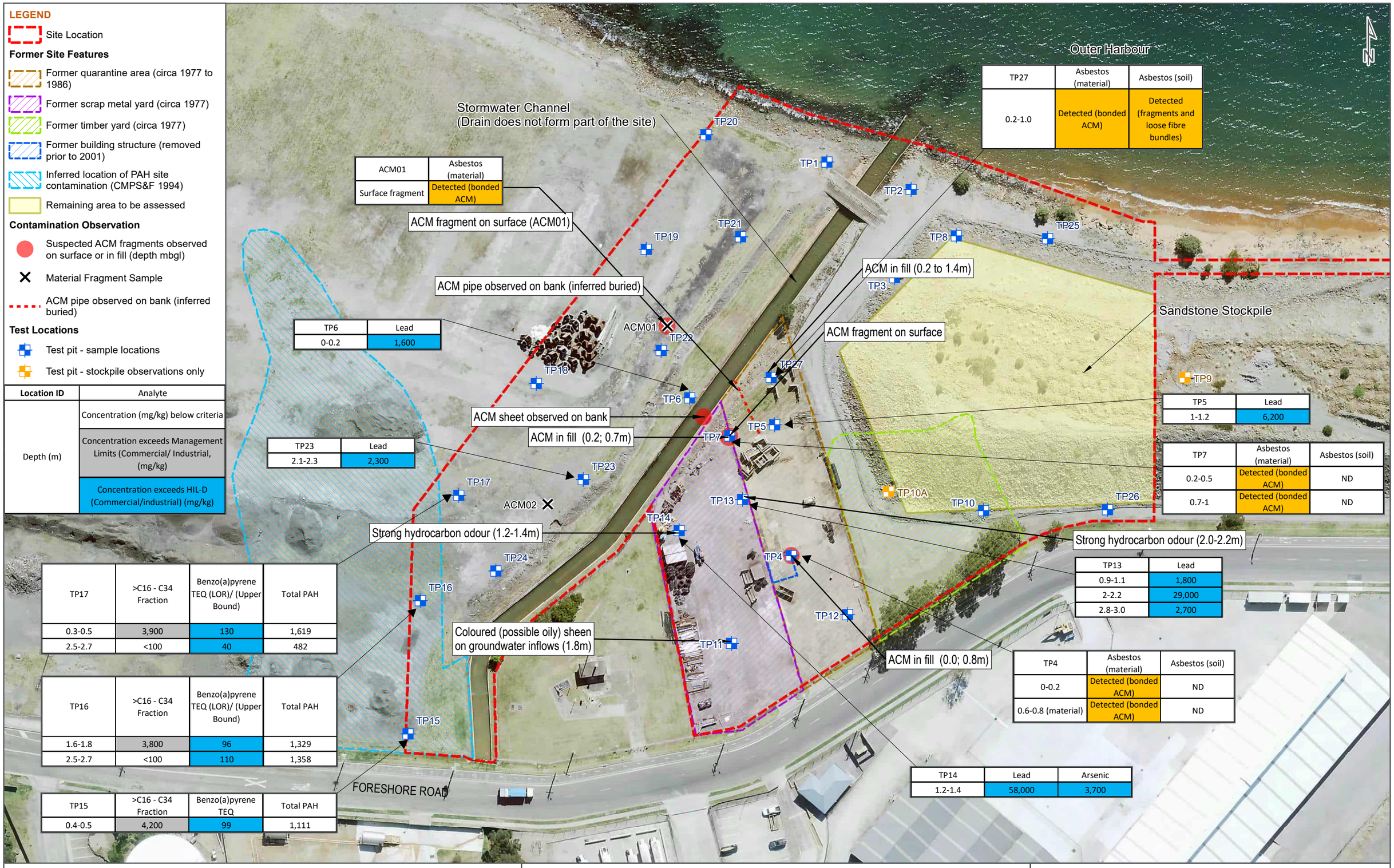

TP27	Asbestos (material)	Asbestos (soil)
0.2-1.0	Detected (bonded ACM)	Detected (fragments and loose fibre bundles)

ACM01	Asbestos (material)
Surface fragment	Detected (bonded ACM)

TP6	Lead
0-0.2	1,600

TP23	Lead
2.1-2.3	2,300

TP5	Lead
1-1.2	6,200

TP7	Asbestos (material)	Asbestos (soil)
0.2-0.5	Detected (bonded ACM)	ND
0.7-1	Detected (bonded ACM)	ND

TP13	Lead
0.9-1.1	1,800
2-2.2	29,000
2.8-3.0	2,700

TP4	Asbestos (material)	Asbestos (soil)
0-0.2	Detected (bonded ACM)	ND
0.6-0.8 (material)	Detected (bonded ACM)	ND

TP14	Lead	Arsenic
1.2-1.4	58,000	3,700

TP17	>C16 - C34 Fraction	Benzo(a)pyrene TEQ (LOR)/ (Upper Bound)	Total PAH
0.3-0.5	3,900	130	1,619
2.5-2.7	<100	40	482

TP16	>C16 - C34 Fraction	Benzo(a)pyrene TEQ (LOR)/ (Upper Bound)	Total PAH
1.6-1.8	3,800	96	1,329
2.5-2.7	<100	110	1,358

TP15	>C16 - C34 Fraction	Benzo(a)pyrene TEQ	Total PAH
0.4-0.5	4,200	99	1,111

FIG NO. 4 (sheet 1)

FIGURE TITLE Areas of Environmental Concern and Soil Summary - Main terminal

DATE 06/05/2022

0 5 10 20 30 40 50
1:1,000 Metres

PAGE SIZE A3

COORDINATE SYSTEM GDA 1994 MGA Zone 56

PROJECT NO. 30013174

PROJECT TITLE Remedial Action Plan
Manildra - Port Kembla Bulk Liquid Terminal

CREATED BY FA13847

SOURCES Roadnet MDS 2020, Design supplied by client, MetroMap Imagery © Aerometrex Pty Ltd

© SMEC Australia Pty Ltd 2022.
All Rights Reserved

Disclaimer: While all reasonable care has been taken to ensure the information contained on this map is up to date and accurate, this map contains data from a number of sources - no warranty is given that the information contained on this map is free from error or omission. Any reliance placed on such information shall be at the sole risk of the user. Please verify the accuracy of all information prior to using it. This map is not a design document.

SMEC
Member of the Surbana Jurong Group

Location: V:\Projectz\30013038 - Ethanol Tank Farm, Port Kembla\Maps\RAP\30013038_RAP_F004A_S1_AEC_SoilSummary.mxd

Last updated by: FA13847 on 6/05/2022 at 11:55

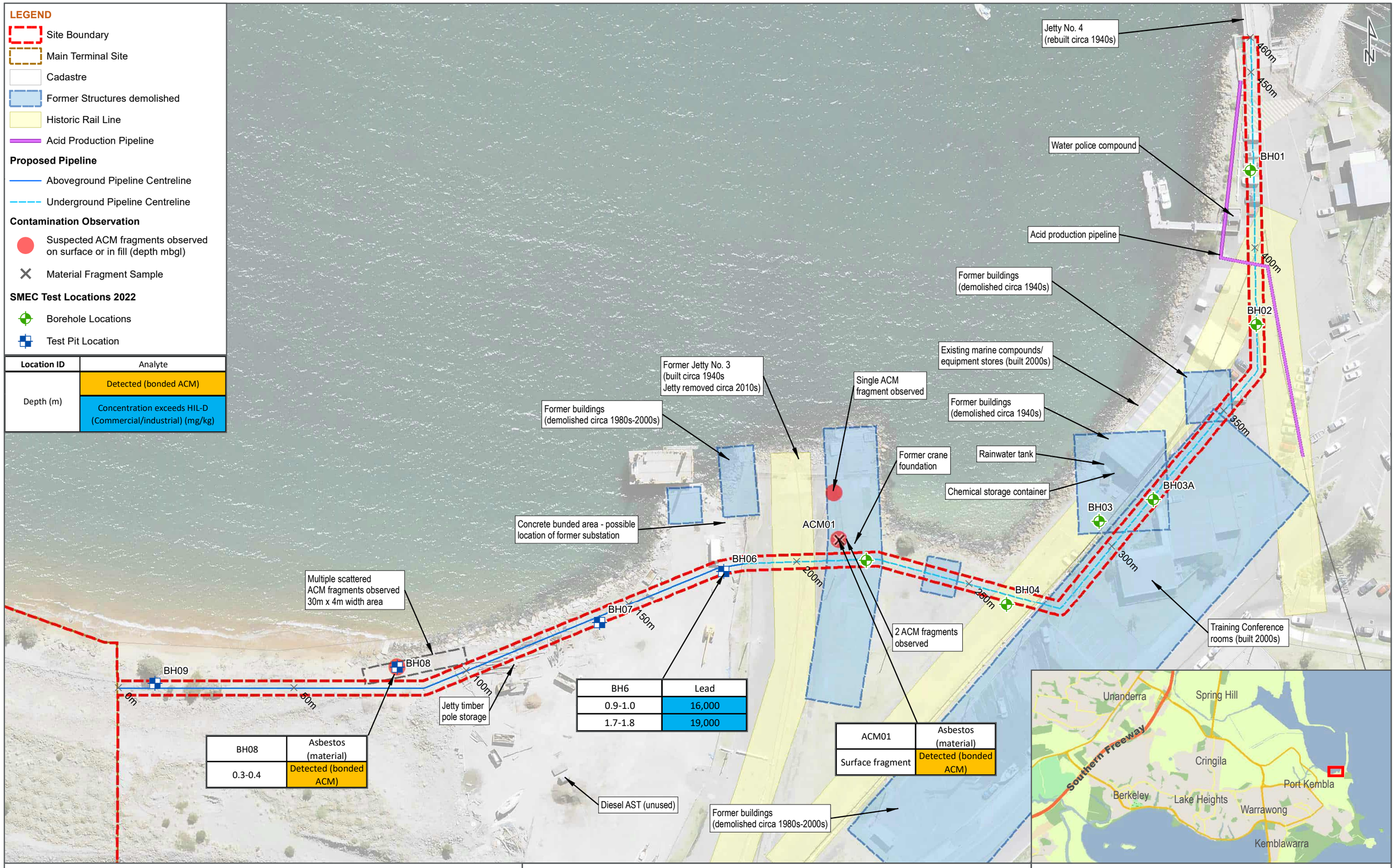

FIG NO. 4 (Sheet 2)

FIGURE TITLE Areas of Environmental Concern and Soil Summary - Pipeline Route

DATE 04/05/2022

0 5 10 20 30 40
1:1,000 Metres

PAGE SIZE A3

COORDINATE SYSTEM GDA 1994 MGA Zone 56

© SMEC Australia Pty Ltd 2022.
All Rights Reserved

Disclaimer: While all reasonable care has been taken to ensure the information contained on this map is up to date and accurate, this map contains data from a number of sources - no warranty is given that the information contained on this map is free from error or omission. Any reliance placed on such information shall be at the sole risk of the user. Please verify the accuracy of all information prior to using it. This map is not a design document.

SMEC
Member of the Surbana Jurong Group

PROJECT NO. 30013038

PROJECT TITLE Remedial Action Plan
Manildra - Port Kembla Bulk Liquid Terminal

CREATED BY FA13847

SOURCES Roadnet MDS 2020,
MetroMap Imagery © Aerometrex Pty Ltd

Location: V:\Projectz\30013038 - Ethanol Tank Farm, Port Kembla\Maps\RAP\30013038_RAP_F004A_S2_AEC_Pipeline.mxd

Last updated by: FA13847 on 4/05/2022 at 11:53

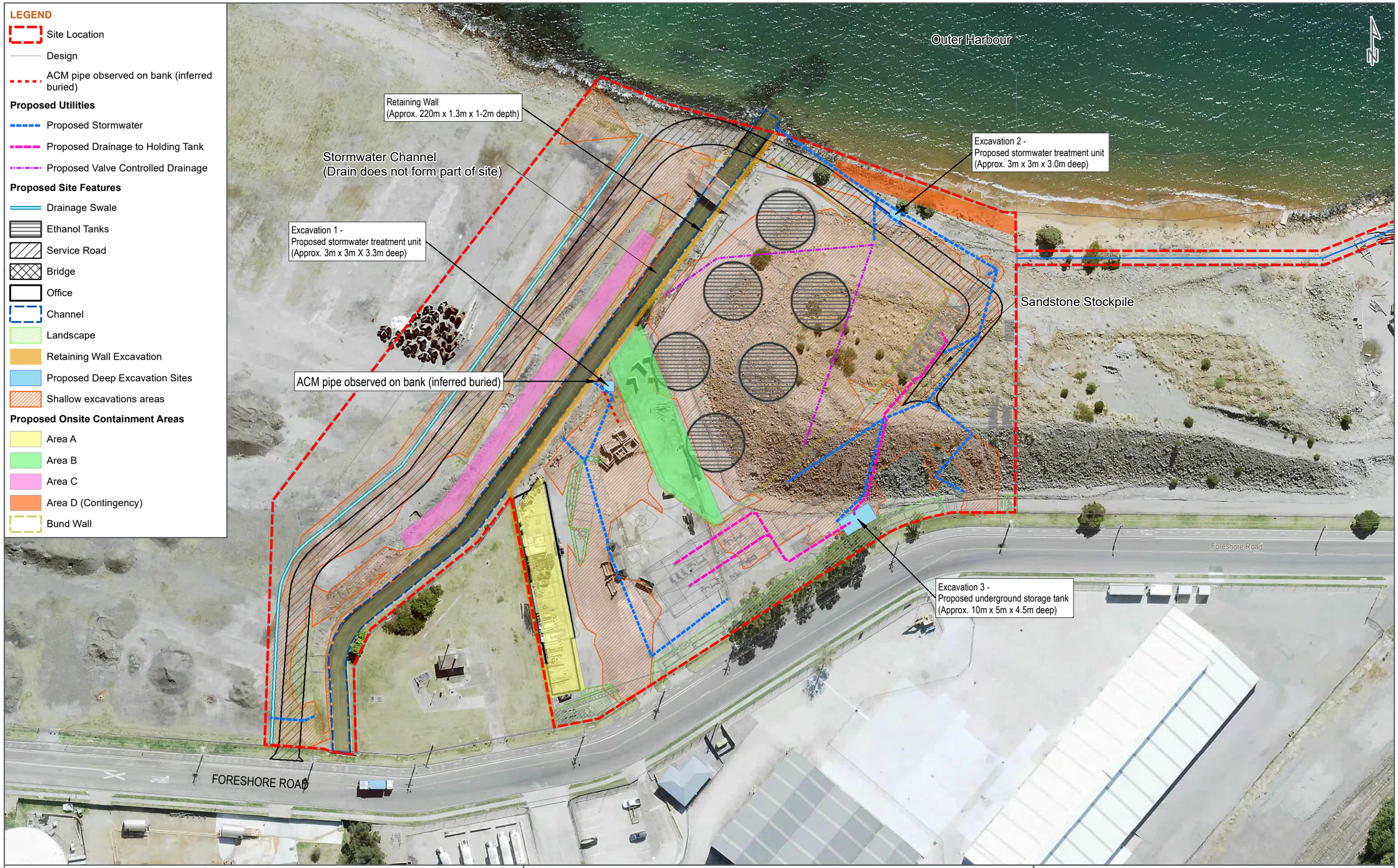

FIG NO. 5

FIGURE TITLE Proposed Remediation Areas

DATE 27/05/2022

0 5 10 20 30 40 50
1:1,000 Metres

PAGE SIZE A3

COORDINATE SYSTEM GDA 1994 MGA Zone 56

© SMEC Australia Pty Ltd 2022.
All Rights Reserved

Disclaimer: While all reasonable care has been taken to ensure the information contained on this map is up to date and accurate, this map contains data from a number of sources - no warranty is given that the information contained on this map is free from error or omission. Any reliance placed on such information shall be at the sole risk of the user. Please verify the accuracy of all information prior to using it. This map is not a design document.

SMEC
Member of the Surbana Jurong Group

PROJECT NO. 30013038

PROJECT TITLE Remedial Action Plan
Manildra - Port Kembla Bulk Liquid Terminal

CREATED BY FA13847

SOURCES Roadnet MDS 2020, Design supplied by client, MetroMap Imagery © Aerometrex Pty Ltd

Location: V:\Projectz\30013038 - Ethanol Tank Farm, Port Kembla\Maps\RAP\30013038_RAP_F005.mxd

Last updated by: FA13847 on 6/05/2022 at 14:23

Appendix B **Previous results**

Table E1 Summary of soil analytical results – Main terminal (DSI -SMEC, 2021b)

Table E1 Summary of soil analytical results – Pipeline route (TSI - SMEC, 2022)

Table B2 Summary of groundwater analytical results – Main terminal (***Updated 9/05/2022, based on DSI - SMEC, 2021b)***

						Asbestos	Heavy Metals								Leachability		BTEXN							TRH (NEPM 1999 Fractions)					TRH (NEPM 2013 fractions)							PAHs				OCP	OPP	PCB	Phenols		
						Asbestos Identification - Presence/ absence	Arsenic	Cadmium	Chromium (total)	Copper	Lead	Mercury	Nickel	Zinc	ASLP Arsenic Lead	ASLP Lead	Benzene	Toluene	Ethylbenzene	m + p-xylene	o-Xylene	Total xylene	Naphthalene	C6 - C9 Fraction	C10 - C14 Fraction	C15 - C28 Fraction	C29 - C36 Fraction	C10 - C36 Fraction (sum)	C6 - C10 Fraction	C6 - C10 Fraction minus BTEX (F1)	> C10 - C16 Fraction	> C10 - C16 Fraction minus Naphtha	> C16 - C34 Fraction	> C34 - C40 Fraction	> C10 - C40 Fraction (sum)	Naphthalene	Benzo(a)pyrene	Benzo(a)pyrene TEQ (LOR) / (Upper Bound)	Sum of PAHs	Total OCPs	Total OPPs	Total PCBs	Phenol	Pentachlorophenol	Cresols
					Units of measurement	N/A	mg/kg	mg/kg	mg/kg	mg/kg	mg/kg	mg/kg	mg/kg	mg/kg	mg/L	mg/L	mg/kg	mg/kg	mg/kg	mg/kg	mg/kg	mg/kg	mg/kg	mg/kg	mg/kg	mg/kg	mg/kg	mg/kg	mg/kg	mg/kg	mg/kg	mg/kg	mg/kg	mg/kg	mg/kg	mg/kg	mg/kg	mg/kg	mg/kg	mg/kg	mg/kg	mg/kg	mg/kg	mg/kg	mg/kg
					Limit of reporting (Eurofins laboratory)	0.01%w/w	2	0.4	5	5	5	0.1	5	5	0.005	0.01	0.1	0.1	0.1	0.2	0.1	0.3	0.5	20	20	50	50	50	20	20	50	50	100	100	100	0.5	0.5	0.5	0.5	0.05 to 0.2	0.2 to 2	0.5	<0.5	<1	<0.5
					Limit of reporting (ALS laboratory)	--	5	4	2	5	5	0.1	2	5	--	--	0.2	0.5	0.5	0.5	0.5	0.5	1	10	50	100	100	50	10	10	50	50	100	100	50	0.5	0.5	0.5	0.5	0.2	0.2	0.1	<0.5	<2	--
Contamination assessment criteria (NEPM 1999, amended 2013)																																														
NEPM 1999 Table 1A (1) Health-based investigation level (HIL D - Commercial/ Industrial)							3,000	900	3,600	240,000	1,500	730	6,000	400,000																								40	4000	45 to 3,600	2,000 to 4,500	7	240,000	660	25,000
NEPM 1999 Table 1A (3) Health-based screening level for Vapour Intrusion (HSL D - Commercial / Industrial, Sand, 0-<1m)																	3	NL	NL			230	NL							260						NL										
Friebel and Nadebaum 2011, Table 4 Health-based screening level for Direct contact (HSL D Commercial / Industrial)																	430	99,000	27,000			81,000	11,000							26,000		20,000	27,000	38,000		11,000										
Friebel and Nadebaum 2011, Table B4 Health-based screening level for Direct contact (Intrusive maintenance worker)																	1,100	120,000	85,000			130,000	29,000							82,000		62,000	85,000	120,000		29,000										
Friebel and Nadebaum 2011, Health-based screening level for Vapour Intrusion (Intrusive maintenance worker, Sand, 0-<2 m)																	77	NL	NL			NL	NL													NL										
NEPM 1999 Table 1B (7) Management Limits (Commercial/ Industrial, Coarse texture)																													700[a]		1,000[a]		3,500	10,000											
Borehole ID	Sample Depth (m)	Sampling Date	Unit (Soil description)	Lab Report	PID (ppmv)																																									
TP1	0.6-0.8	17/02/2021	FILL: Gravelly SAND with cobbles: fine to coarse grained, dark grey, dark brown, gravel is fine to coarse grained, angular, iron slag, trace silt and iron material.	775286	0.5	No asbestos detected	9.2	< 0.4	12	79	53	< 0.1	7	56	--	--	< 0.1	< 0.1	< 0.1	< 0.2	< 0.1	< 0.3	< 0.5	< 20	< 20	< 50	< 50	< 50	< 20	< 20	< 50	< 50	< 100	< 100	< 100	< 0.5	< 0.5	1.2	< 0.5	< 0.2	< 0.2	< 0.5	--	--	--
TP1	2-2.2	17/02/2021	FILL: SAND with gravel trace cobbles: fine to coarse grained, brown, gravel is fine to coarse grained, angular, iron slag, trace iron material.	775286	0.4	--	13	< 0.4	< 5	17	23	< 0.1	< 5	30	--	--	< 0.1	< 0.1	< 0.1	< 0.2	< 0.1	< 0.3	< 0.5	< 20	< 20	< 50	< 50	< 50	< 20	< 20	< 50	< 50	< 100	< 100	< 100	< 0.5	< 0.5	1.2	< 0.5	--	--	--	--	--	--
TP1	2.8-3	17/02/2021	SAND: fine to coarse grained, pale orange, pale brown.	775286	0.5	--	--	--	--	--	--	--	--	--	--	--	--	--	--	--	--	--	--	--	--	--	--	--	--	--	--	--	--	--	--	--	--	--	--	--	--	--	--	--	--	--
TP2	0-0.1	16/02/2021	GRAVEL: fine to medium grained, angular, pale grey, grey.	775286	0.0	--	3	0.9	580	78	75	< 0.1	7.5	320	--	--	--	--	--	--	--	--	--	--	--	--	--	--	--	--	--	--	--	--	--	--	--	--	--	--	--	--	--	--	--	--
TP2	0.1-0.3	16/02/2021	FILL: Gravelly SILT with sand: pale grey, pale orange, gravel is fine to coarse grained, angular, sand is fine to coarse grained, trace boulders, brick.	775286	0.0	No asbestos detected	27	9.2	34	410	350	0.7	17	1,600	--	--	< 0.1	< 0.1	< 0.1	< 0.2	< 0.1	< 0.3	< 0.5	< 20	< 20	< 50	< 50	< 50	< 20	< 20	< 50	< 50	< 100	< 100	< 100	< 0.5	< 0.5	1.2	< 0.5	< 0.2	< 0.2	< 0.5	--	--	--
TP2	0.6-0.8	16/02/2021	FILL: Clayey SAND trace silt: fine to coarse grained, pale grey, orange, clay is low plasticity, trace boulders.	775286	0.0	--	12	3.5	39	310	190	0.3	17	530	--	--	< 0.1	< 0.1	< 0.1	< 0.2	< 0.1	< 0.3	< 0.5	< 20	< 20	< 50	< 50	< 50	< 20	< 20	< 50	< 50	< 100	< 100	< 100	< 0.5	< 0.5	1.2	< 0.5	< 0.2	< 0.2	< 0.5	--	--	--
TP3	0.2-0.4	15/02/2021	FILL: Sandy CLAY with gravel: medium plasticity, dark grey, brown, sand is medium to coarse grained, gravel is fine to coarse grained, angular, with cobbles	775286	0.2	No asbestos detected	21	1.4	15	160	120	< 0.1	12	460	--	--	< 0.1	< 0.1	< 0.1	< 0.2	< 0.1	< 0.3	< 0.5	< 20	< 20	< 50	< 50	< 50	< 20	< 20	< 50	< 50	< 100	< 100	< 100	< 0.5	< 0.5	1.2	< 0.5	< 0.2	< 0.2	< 0.5	--	--	--
QC2 *(Intra-laboratory duplicate of TP3/0.2-0.4)*	0.2-0.4	15/02/2021	As above	775286	-	--	18	1.3	17	210	140	< 0.1	14	410	--	--	< 0.1	< 0.1	< 0.1	< 0.2	< 0.1	< 0.3	< 0.5	< 20	< 20	< 50	< 50	< 50	< 20	< 20	< 50	< 50	< 100	< 100	< 100	< 0.5	< 0.5	1.2	< 0.5	< 0.2	< 0.2	< 0.5	--	--	--
QC2A *(Inter-laboratory duplicate of TP3/0.2-0.4)*	0.2-0.4	15/02/2021	As above	ES2107758	-	--	10	2.0	14	206	174	0.1	11	415	--	--	--	--	--	--	--	--	--	--	--	--	--	--	--	--	--	--	--	--	--	--	--	--	--	--	--	--	--	--	--	--
TP3	1.8-2	15/02/2021	SAND: fine to coarse grained, pale brown, pale orange, with laminations of dark grey, high plasticity clay, trace sea shells.	775286	0.0	No asbestos detected	31	< 0.4	< 5	89	250	< 0.1	7.1	68	--	--	< 0.1	< 0.1	< 0.1	< 0.2	< 0.1	< 0.3	< 0.5	< 20	< 20	< 50	< 50	< 50	< 20	< 20	< 50	< 50	< 100	< 100	< 100	< 0.5	< 0.5	1.2	< 0.5	< 0.2	< 0.2	< 0.5	--	--	--
TP4	0-0.2	15/02/2021	FILL: Clayey GRAVEL trace silt: medium to coarse grained, angular, pale grey, grey, clay is low plasticity.	775286	0.2	No asbestos detected	30	8.1	27	550	980	0.6	23	2,900	--	--	< 0.1	< 0.1	< 0.1	< 0.2	< 0.1	< 0.3	< 0.5	< 20	< 20	< 50	< 50	< 50	< 20	< 20	< 50	< 50	< 100	< 100	< 100	< 0.5	< 0.5	1.2	< 0.5	< 0.2	< 0.2	< 0.5	--	--	--
TP4/0-0.2 ACM	0-0.2	15/02/2021	MATERIAL FRAGMENT: Bonded ACM Fragment (1) observed at 0-0.2m (Good condition, 30mm length)	775286	-	Chrysotile and crocidolite asbestos detected.	--	--	--	--	--	--	--	--	--	--	--	--	--	--	--	--	--	--	--	--	--	--	--	--	--	--	--	--	--	--	--	--	--	--	--	--	--	--	--	--
TP4	0.6-0.8	15/02/2021	FILL: Gravelly CLAY with sand: medium plasticity, dark grey, brown, red, black, gravel is fine to coarse grained, angular, sand is medium to coarse grained, trace boulders and bricks.	775286	0.0	No asbestos detected	--	--	--	--	--	--	--	--	--	--	--	--	--	--	--	--	--	--	--	--	--	--	--	--	--	--	--	--	--	--	--	--	--	--	--	--	--	--	--	--
TP4/0.6-0.8 ACM	0.6-0.8	15/02/2021	MATERIAL FRAGMENT: Bonded ACM Fragments (2) observed at 0.6-0.8m (Good condition, 120-150mm)	775286	-	Chrysotile, amosite and crocidolite asbestos detected.	--	--	--	--	--	--	--	--	--	--	--	--	--	--	--	--	--	--	--	--	--	--	--	--	--	--	--	--	--	--	--	--	--	--	--	--	--	--	--	--
TP4	1.3-1.5	15/02/2021	SAND: fine to coarse grained, pale brown.	775286	0.0	--	38	0.9	6	290	290	0.2	21	240	--	--	< 0.1	< 0.1	< 0.1	< 0.2	< 0.1	< 0.3	< 0.5	< 20	< 20	< 50	< 50	< 50	< 20	< 20	< 50	< 50	< 100	< 100	< 100	< 0.5	< 0.5	1.2	< 0.5	< 0.2	< 0.2	< 0.5	--	--	--
TP5	0-0.2	15/02/2021	FILL: Gravelly CLAY with sand: medium plasticity, dark grey, gravel is medium to coarse grained, angular, sand is medium to coarse grained, trace cobbles, trace silt.	775286	0.0	No asbestos detected	40	4.3	26	720	1,200	0.3	17	1,300	--	--	< 0.1	< 0.1	< 0.1	< 0.2	< 0.1	< 0.3	< 0.5	< 20	< 20	< 50	< 50	< 50	< 20	< 20	< 50	< 50	< 100	< 100	< 100	< 0.5	< 0.5	1.2	< 0.5	< 0.2	< 0.2	< 0.5	--	--	--
QC1 *(Intra-laboratory duplicate of TP5/0.0-0.2)*	0-0.2	15/02/2021	As above	775286	-	--	45	3.7	23	450	1,000	0.2	15	1,400	--	--	< 0.1	< 0.1	< 0.1	< 0.2	< 0.1	< 0.3	< 0.5	< 20	< 20	< 50	< 50	< 50	< 20	< 20	< 50	< 50	< 100	< 100	< 100	< 0.5	< 0.5	1.2	< 0.5	< 0.2	< 0.2	< 0.5	--	--	--
QC1A *(Inter-laboratory duplicate of TP5/0.0-0.2)*	0-0.2	15/02/2021	As above	ES2107758	-	--	36	4.0	16	628	932	0.3	12	1,270	--	--	<0.2	<0.5	<0.5	<0.5	<0.5	<0.5	<1	<10	<50	<100	<100	<50	<10	<10	<50	<50	<100	<100	<50	<0.5	<0.5	1.2	<0.5	< 0.2	< 0.2	<0.1	--	--	--
TP5	1-1.2	15/02/2021	FILL: Clayey GRAVEL with sand: medium to coarse grained, poorly graded, angular, dark grey, clay is medium plasticity, sand is medium to coarse grained.	775286	0.0	--	35	5.7	31	650	6,200	0.7	19	2,200	--	--	< 0.1	< 0.1	< 0.1	< 0.2	< 0.1	< 0.3	< 0.5	< 20	< 20	< 50	< 50	< 50	< 20	< 20	< 50	< 50	< 100	< 100	< 100	< 0.5	< 0.5	1.2	< 0.5	< 0.2	< 0.2	< 0.5	--	--	--
TP5	1.6-1.9	15/02/2021	SAND: medium to coarse grained, pale brown.	777451	0.0	--	43	1.2	< 5	120	560	0.2	15	240	--	--	--	--	--	--	--	--	--	--	--	--	--	--	--	--	--	--	--	--	--	--	--	--	--	--	--	--	--	--	--	--
TP6	0-0.2	17/02/2021	FILL: SAND with gravel trace silt: fine to coarse grained, brown, dark grey, gravel is fine to coarse grained, angular, trace cobbles.	775286	0.7	No asbestos detected	49	7.0	62	2,100	1,600	0.5	48	4,900	--	--	< 0.1	< 0.1	< 0.1	< 0.2	< 0.1	< 0.3	< 0.5	< 20	< 20	< 50	< 50	< 50	< 20	< 20	< 50	< 50	< 100	< 100	< 100	< 0.5	< 0.5	1.2	< 0.5	< 0.2	< 0.2	< 0.5	--	--	--
TP6	0.5-0.6	17/02/2021	SAND: fine to coarse grained, pale grey, pale brown.	777451	0.7	--	< 2	< 0.4	< 5	< 5	< 5	< 0.1	< 5	< 5	--	--	--	--	--	--	--	--	--	--	--	--	--	--	--	--	--	--	--	--	--	--	--	--	--	--	--	--	--	--	--	--
TP7	0.2-0.5	15/02/2021	FILL: Bouldery SAND with gravel: fine to coarse grained, dark grey, boulders are up to 0.8m in diameter, gravel is fine to coarse grained, angular to sub-angular.	775286	0.1	No asbestos detected	25	6.1	17	440	510	0.3	14	1,900	--	--	< 0.1	< 0.1	< 0.1	< 0.2	< 0.1	< 0.3	< 0.5	< 20	< 20	< 50	< 50	< 50	< 20	< 20	< 50	< 50	< 100	< 100	< 100	< 0.5	< 0.5	1.2	< 0.5	< 0.2	< 0.2	< 0.5	--	--	--
TP7/0.2-0.5 ACM	0.2-0.5	15/02/2021	MATERIAL FRAGMENT: Bonded ACM Fragment (1) observed at 0.2-0.5m (Good condition, 10mm length)	775286	-	Chrysotile, amosite and crocidolite asbestos detected.	--	--	--	--	--	--	--	--	--	--	--	--	--	--	--	--	--	--	--	--	--	--	--	--	--	--	--	--	--	--	--	--	--	--	--	--	--	--	--	--
TP7	0.7-1	15/02/2021	FILL: Bouldery SAND with gravel: fine to coarse grained, dark grey, boulders are up to 0.8m in diameter, gravel is fine to coarse grained, angular to sub-angular.	775286	0.1	No asbestos detected	--	--	--	--	--	--	--	--	--	--	--	--	--	--	--	--	--	--	--	--	--	--	--	--	--	--	--	--	--	--	--	--	--	--	--	--	--	--	--	--
TP7/0.7-1 ACM	0.7-1	15/02/2021	MATERIAL FRAGMENT: Bonded ACM Fragment (2) observed at 0.7-1.0m (Good condition, 30-50mm length)	775286	-	Chrysotile asbestos detected.	--	--	--	--	--	--	--	--	--	--	--	--	--	--	--	--	--	--	--	--	--	--	--	--	--	--	--	--	--	--	--	--	--	--	--	--	--	--	--	--
TP7	2.2-2.4	15/02/2021	SAND: fine to coarse grained, pale brown, with black carbatious lamination.	775286	0.3	--	130	5.3	8	670	1,200	0.5	42	530	--	--	< 0.1	< 0.1	< 0.1	< 0.2	< 0.1	< 0.3	< 0.5	< 20	< 20	< 50	< 50	< 50	< 20	< 20	< 50	< 50	< 100	< 100	< 100	< 0.5	< 0.5	1.2	1.6	--	--	--	--	--	--
TP7	2.8-3	15/02/2021	SAND: fine to coarse grained, pale brown, with black carbatious lamination.	775286	0.2	--	--	--	--	--	--	--	--	--	--	--	--	--	--	--	--	--	--	--	--	--	--	--	--	--	--	--	--	--	--	--	--	--	--	--	--	--	--	--	--	--
TP8	0.5-0.7	16/02/2021	FILL: SAND trace gravel with clay: fine to coarse grained, grey, dark grey, gravel is fine to medium grained, angular, clay is low plasticity, trace silt.	775286	0.0	No asbestos detected	2.3	< 0.4	10	65	6	< 0.1	6.5	40	--	--	< 0.1	< 0.1	< 0.1	< 0.2	< 0.1	< 0.3	< 0.5	< 20	< 20	< 50	< 50	< 50	< 20	< 20	< 50	< 50	< 100	< 100	< 100	< 0.5	< 0.5	1.2	< 0.5	< 0.2	< 0.2	< 0.5	--	--	--
TP8	1.5-1.7	16/02/2021	SAND: fine to coarse grained, red, orange, brown.	775286	0.3	--	17	< 0.4	< 5	41	110	< 0.1	6.2	60	--	--	< 0.1	< 0.1	< 0.1	< 0.2	< 0.1	< 0.3	< 0.5	< 20	< 20	< 50	< 50	< 50	< 20	< 20	< 50	< 50	< 100	< 100	< 100	< 0.5	< 0.5	1.2	< 0.5	--	--	--	--	--	--
TP10	0.2-0.4	17/02/2021	FILL: Gravelly Silty SAND: coarse grained, dark grey, black, gravel is fine to coarse grained, angular, with iron slag and trace iron material.	775286	0.3	No asbestos detected	6.8	< 0.4	12	110	110	< 0.1	5.7	63	--	--	< 0.1	< 0.1	< 0.1	< 0.2	< 0.1	< 0.3	< 0.5	< 20	< 20	< 50	< 50	< 50	< 20	< 20	< 50	< 50	< 100	< 100	< 100	< 0.5	< 0.5	1.2	< 0.5	< 0.2	< 0.2	< 0.5	--	--	--
TP10	0.8-1	17/02/2021	FILL: Gravelly CLAY trace cobbles: high plasticity, dark brown, red brown, gravel is fine to coarse grained, angular with iron slag an trace iron material, trace coarse grained sand.	775286	0.2	--	9.6	0.8	21	160	390	0.1	18	410	--	--	< 0.1	< 0.1	< 0.1	< 0.2	< 0.1	< 0.3	< 0.5	< 20	< 20	< 50	< 50	< 50	< 20	< 20	< 50	< 50	< 100	< 100	< 100	< 0.5	< 0.5	1.2	< 0.5	< 0.2	< 0.2	< 0.5	--	--	--
TP11	0.2-0.4	15/02/2021	FILL: Gravelly CLAY with sand: medium plasticity, dark grey, gravel is medium to coarse grained, angular, sand is medium to coarse grained, trace glass.	775286	0.8	No asbestos detected	36	8.6	21	270	1,100	0.5	16	3,200	--	--	< 0.1	< 0.1	< 0.1	< 0.2	< 0.1	< 0.3	< 0.5	< 20	< 20	< 50	< 50	< 50	< 20	< 20	< 50	< 50	< 100	< 100	< 100	< 0.5	< 0.5	1.2	< 0.5	< 0.2	< 0.2	< 0.5	--	--	--
TP11	1.3-1.5	15/02/2021	SAND: fine to coarse grained, pale brown	775286	1.3	--	340	< 0.4	7.9	210	300	< 0.1	6.3	90	--	--	< 0.1	< 0.1	< 0.1	< 0.2	< 0.1	< 0.3	< 0.5	< 20	< 20	< 50	< 50	< 50	< 20	< 20	< 50	< 50	< 100	< 100	< 100	< 0.5	< 0.5	1.2	< 0.5	< 0.2	< 0.2	< 0.5	--	--	--
TP12	0.2-0.3	17/02/2021	FILL: Gravelly Silty SAND: fine to coarse grained, dark brown, grey, gravel is fine to coarse grained, angular, iron slag.	775286	0.4	No asbestos detected	15	0.8	5.8	160	140	< 0.1	19	150	--	--	< 0.1	< 0.1	< 0.1	< 0.2	< 0.1	< 0.3	< 0.5	< 20	< 20	< 50	< 50	< 50	< 20	< 20	< 50	< 50	< 100	< 100	< 100	< 0.5	< 0.5	1.2	< 0.5	< 0.2	< 0.2	< 0.5	--	--	--
TP12	1.2-1.4	17/02/2021	SAND: fine to coarse grained, pale brown, red brown, trace sea shells.	775286	0.4	--	22	1.1	< 5	160	22	< 0.1	230	52	--	--	< 0.1	< 0.1	< 0.1	< 0.2	< 0.1	< 0.3	< 0.5	< 20	< 20	< 50	< 50	< 50	< 20	< 20	< 50	< 50	< 100	< 100	< 100	< 0.5	< 0.5	1.2	< 0.5	< 0.2	< 0.2	< 0.5	--	--	--
TP12	2.8-3	17/02/2021	SAND: fine to coarse grained, pale brown, red brown, trace sea shells.	775286	0.4	--	18	0.7	< 5	84	29	< 0.1	62	28	--	--	--	--	--	--	--	--	--	--	--	--	--	--	--	--	--	--	--	--	--	--	--	--	--	--	--	--	--	--	--	--
TP13	0.2-0.4	17/02/2021	FILL: Gravelly CLAY trace cobbles: medium plasticity, dark grey, dark brown, gravel is fine to coarse grained, angular, iron slag.	775286	0.7	No asbestos detected	29	6.9	23	610	1,300	0.7	18	3,100	--	--	< 0.1	< 0.1	< 0.1	< 0.2	< 0.1	< 0.3	< 0.5	< 20	< 20	< 50	< 50	< 50	< 20	< 20	< 50	< 50	< 100	< 100	< 100	< 0.5	< 0.5	1.2	< 0.5	< 0.2	< 0.2	< 0.5	--	--	--
TP13	0.9-1.1	17/02/2021	FILL: Sandy GRAVEL with clay: fine to coarse grained, poorly graded, brown, gravel is iron slag, sand is medium to coarse grained, trace brick.	775286	0.5	--	110	7.8	31	480	1,800	0.9	24	4,800	--	--	--	--	--	--	--	--	--	--	--	--	--	--	--	--	--	--	--	--	--	--	--	--	--	--	--	--	--	--	--	--

						Asbestos	Heavy Metals								Leachability		BTEXN							TRH (NEPM 1999 Fractions)					TRH (NEPM 2013 fractions)							PAHs				OCP	OPP	PCB	Phenols		
						Asbestos Identification - Presence/absence	Arsenic	Cadmium	Chromium (total)	Copper	Lead	Mercury	Nickel	Zinc	ASLP Arsenic Lead	ASLP Lead	Benzene	Toluene	Ethylbenzene	m + p-xylene	o-Xylene	Total xylene	Naphthalene	C6 - C9 Fraction	C10 - C14 Fraction	C15 - C28 Fraction	C29 - C36 Fraction	C10 - C36 Fraction (sum)	C6 - C10 Fraction	C6 - C10 Fraction minus BTEX (F1)	> C10 - C16 Fraction	> C10 - C16 Fraction minus Naphthalene	> C16 - C34 Fraction	> C34 - C40 Fraction	> C10 - C40 Fraction (sum)	Naphthalene	Benzo(a)pyrene	Benzo(a)pyrene TEQ (LOR) / (Upper Bound)	Sum of PAHs	Total OCPs	Total OPPs	Total PCBs	Phenol	Pentachlorophenol	Cresols
Units of measurement						N/A	mg/kg	mg/kg	mg/kg	mg/kg	mg/kg	mg/kg	mg/kg	mg/kg	mg/L	mg/L	mg/kg	mg/kg	mg/kg	mg/kg	mg/kg	mg/kg	mg/kg	mg/kg	mg/kg	mg/kg	mg/kg	mg/kg	mg/kg	mg/kg	mg/kg	mg/kg	mg/kg	mg/kg	mg/kg	mg/kg	mg/kg	mg/kg	mg/kg	mg/kg	mg/kg	mg/kg	mg/kg	mg/kg	mg/kg
Limit of reporting (Eurofins laboratory)						0.01%w/w	2	0.4	5	5	5	0.1	5	5	0.005	0.01	0.1	0.1	0.1	0.2	0.1	0.3	0.5	20	20	50	50	50	20	20	50	50	100	100	100	0.5	0.5	0.5	0.5	0.05 to 0.2	0.2 to 2	0.5	<0.5	<1	<0.5
Limit of reporting (ALS laboratory)						--	5	4	2	5	5	0.1	2	5	--	--	0.2	0.5	0.5	0.5	0.5	0.5	1	10	50	100	100	50	10	10	50	50	100	100	50	0.5	0.5	0.5	0.5	0.2	0.2	0.1	<0.5	<2	--
Contamination assessment criteria (NEPM 1999, amended 2013)																																													
NEPM 1999 Table 1A (1) Health-based investigation level (HIL D - Commercial/ Industrial)							3,000	900	3,600	240,000	1,500	730	6,000	400,000																								40	4000	45 to 3,600	2,000 to 4,500	7	240,000	660	25,000
NEPM 1999 Table 1A (3) Health-based screening level for Vapour Intrusion (HSL D - Commercial / Industrial, Sand, 0-<1m)																	3	NL	NL			230	NL							260						NL										
Friebel and Nadebaum 2011, Table 4 Health-based screening level for Direct contact (HSL D Commercial / Industrial)																	430	99,000	27,000			81,000	11,000							26,000		20,000	27,000	38,000		11,000										
Friebel and Nadebaum 2011, Table B4 Health-based screening level for Direct contact (Intrusive maintenance worker)																	1,100	120,000	85,000			130,000	29,000							82,000		62,000	85,000	120,000		29,000										
Friebel and Nadebaum 2011, Health-based screening level for Vapour Intrusion (Intrusive maintenance worker, Sand, 0-<2 m)																	77	NL	NL			NL	NL													NL										
NEPM 1999 Table 1B (7) Management Limits (Commercial/ Industrial, Coarse texture)																													700[a]		1,000[a]		3,500	10,000											
Borehole ID	Sample Depth (m)	Sampling Date	Unit (Soil description)	Lab Report	PID (ppmv)																																								
TP13	2-2.2	17/02/2021	Sandy CLAY: high plasticity, black clay and sand contaminated soil, hydrocarbons, oily smell, staining gloves, sand is fine to coarse grained.	775286 / 777541	4.0	--	2,200	14.0	24	5,900	29,000	6.9	230	2,000	0.24	<0.01	< 0.1	< 0.1	< 0.1	< 0.2	< 0.1	< 0.3	< 0.5	< 20	140	1,400	780	2,320	< 20	< 20	240	240	2,000	320	2,560	< 0.5	< 0.5	1.2	2.3	< 0.2	< 0.2	< 0.5	--	--	--
TP13	2.8-3.0	17/02/2021	SAND: fine to coarse grained, pale brown, pale grey.	777451	0.6	--	120	5.1	34	480	2,700	3.2	< 5	810	--	--	--	--	--	--	--	--	< 0.5	< 20	< 20	< 50	< 50	< 50	< 20	< 20	< 50	< 50	< 100	< 100	< 100	--	--	--	--	--	--	--	--	--	--
TP14	0-0.2	17/02/2021	GRAVEL: fine to medium grained, poorly graded, angular, pale grey, grey.	775286	1.0	--	< 2	< 0.4	< 5	< 5	< 5	< 0.1	< 5	< 5	--	--	--	--	--	--	--	--	--	--	--	--	--	--	--	--	--	--	--	--	--	--	--	--	--	--	--	--	--	--	--
TP14	0.5-0.7	17/02/2021	FILL: Gravelly CLAY trace sand: high plasticity, brown, dark grey, gravel is fine to coarse grained, angular, iron slag, sand is medium to coarse grained, trace boulders and brick.	775286	1.0	No asbestos detected	21	7.6	22	190	620	0.2	20	2,300	--	--	< 0.1	< 0.1	< 0.1	< 0.2	< 0.1	< 0.3	< 0.5	< 20	< 20	< 50	< 50	< 50	< 20	< 20	< 50	< 50	< 100	< 100	< 100	< 0.5	< 0.5	1.2	< 0.5	< 0.2	< 0.2	< 0.5	--	--	--
TP14	1.2-1.4	17/02/2021	Sandy CLAY: high plasticity, dark grey, black hydrocarbon contaminated soil, oily smell.	775286 / 777541	5.9	--	3,700	66.0	52	7,600	58,000	33.0	150	9,600	3.40	2.2	< 0.1	< 0.1	< 0.1	< 0.2	< 0.1	< 0.3	< 0.5	< 20	110	630	210	950	< 20	< 20	210	210	620	120	950	< 0.5	0.7	1.4	5.7	< 0.2	< 0.2	< 0.5	--	--	--
TP14	1.8-2	17/02/2021	SAND: fine to coarse grained, pale brown, pale orange	775286	1.0	--	16	6.2	< 5	76	12	< 0.1	15	140	--	--	< 0.1	< 0.1	< 0.1	< 0.2	< 0.1	< 0.3	< 0.5	< 20	< 20	< 50	< 50	< 50	< 20	< 20	< 50	< 50	< 100	< 100	< 100	< 0.5	< 0.5	1.2	< 0.5	--	--	--	--	--	--
TP14	2.5-2.7	17/02/2021	SAND: fine to coarse grained, pale brown, pale orange.	777451	0.9	--	< 2	< 0.4	< 5	< 5	< 5	< 0.1	< 5	< 5	--	--	--	--	--	--	--	--	--	--	--	--	--	--	--	--	--	--	--	--	--	--	--	--	--	--	--	--	--	--	--
QC3 *(Intra-laboratory duplicate of TP14/2.5-2.7)*	2.5-2.7	17/02/2021	As above	777451	--	--	< 2	< 0.4	< 5	< 5	< 5	< 0.1	< 5	< 5	--	--	--	--	--	--	--	--	--	--	--	--	--	--	--	--	--	--	--	--	--	--	--	--	--	--	--	--	--	--	--
TP15	0.0-0.1	12/10/2021	FILL Gravelly SAND: fine to coarse grained, dark grey, 'with foreign materials (glass fragment, brick, plastic).	833233	4.8	No asbestos detected	12	1.2	42	260	99	0.3	8.5	250	--	--	< 0.1	< 0.1	< 0.1	< 0.2	< 0.1	< 0.3	< 0.5	< 20	< 20	150	98	248	< 20	< 20	< 50	< 50	250	< 100	250	< 0.5	6.8	10.0	62.0	< 1	< 0.2	< 1	< 0.5	< 1	< 1
TP15	0.4-0.5	12/10/2021	FILL Clayey SILT: pale grey mottled pale yellow.	833233	7.6	No asbestos detected	5	0.9	44	210	92	0.5	7.3	88	--	--	< 0.1	< 0.1	< 0.1	< 0.2	< 0.1	< 0.3	< 0.5	< 20	74	3,700	1,100	4,874	< 20	< 20	88	88	4,200	600	4,888	1.4	53.0	99	1110.8	< 1	< 0.2	< 1	< 0.5	< 1	< 1
TP15	1.8-1.9	12/10/2021	SAND: medium grained, pale yellow.	833233	6.2	--	17	1.0	< 5	28	37	< 0.1	< 5	92	--	--	< 0.1	< 0.1	< 0.1	< 0.2	< 0.1	< 0.3	< 0.5	< 20	< 20	< 50	< 50	< 50	< 20	< 20	< 50	< 50	< 100	< 100	< 100	< 0.5	< 0.5	1.2	< 0.5	< 0.1	< 0.2	< 0.1	< 0.5	< 1	< 0.5
TP16	0.3-0.5	12/10/2021	FILL Clayey GRAVEL: dark grey to black, with coal wash, trace silt.	833233	8.3	No asbestos detected	3	< 0.4	12	29	21	< 0.1	5.8	39	--	--	< 0.1	< 0.1	< 0.1	< 0.2	< 0.1	< 0.3	< 0.5	< 20	< 20	110	56	166	< 20	< 20	< 50	< 50	130	< 100	130	< 0.5	< 0.5	1.2	1.0	< 0.1	< 0.2	< 0.1	< 0.5	< 1	< 0.5
QA1 *(Intra-laboratory duplicate of TP16/0.3-0.5)*	-	12/10/2021	As above	833233	--	--	24	0.4	10	38	19	< 0.1	28.0	79	--	--	< 0.1	< 0.1	< 0.1	< 0.2	< 0.1	< 0.3	< 0.5	< 20	< 20	< 50	< 50	< 50	< 20	< 20	< 50	< 50	< 100	< 100	< 100	< 0.5	< 0.5	1.2	< 0.5	< 0.1	< 0.2	< 0.1	< 0.5	< 1	< 0.5
QA1A *(Inter-laboratory duplicate of TP16/0.3-0.5)*	-	12/10/2021	As above	ES2137909	--	--	<5	<1	14	27	29	< 0.1	3.0	26	--	--	<0.2	<0.5	<0.5	<0.5	<0.5	<0.5	<1	<10	<50	<100	<100	< 50	<10	<10	< 50	< 50	< 100	< 100	<50	< 0.5	< 0.5	1.2	< 0.5	< 0.2	< 0.2	<0.1	<0.5	<2	< 1
TP16	1.6-1.8	12/10/2021	FILL Clayey SILT: dark brown with mottled yellow, trace sub-rounded gravel.	833233	10.3	No asbestos detected	8	0.6	33	110	38	0.2	9.5	110	--	--	< 0.5	< 0.5	< 0.5	< 1	< 0.5	< 1.5	30	< 100	60	3,200	970	4,230	< 100	< 100	83	53	3,800	560	4,443	23.0	47.0	96	1328.7	< 1	< 0.2	< 1	<0.5	<1	< 1
TP16	2.5-2.7	12/10/2021	FILL Clayey SILT: dark brown with mottled yellow, trace sub-rounded gravel.	833233	7.8	No asbestos detected	26	< 0.4	27	53	49	0.1	9.5	92	--	--	< 0.1	< 0.1	< 0.1	< 0.2	< 0.1	< 0.3	9	< 20	< 20	< 50	< 50	< 50	< 20	< 20	< 50	< 50	< 100	< 100	< 100	24.0	60.0	110	1358.1	< 1	< 0.2	< 1	<0.5	<1	< 1
TP17	0.3-0.5	12/10/2021	FILL Clayey SILT: dark brown with mottled yellow, trace brck and angular to sub-angular gravel.	833233	2.8	No asbestos detected	13	1.0	33	180	68	0.1	13.0	150	--	--	< 0.1	< 0.1	< 0.1	< 0.2	< 0.1	< 0.3	< 0.5	< 20	58	3,400	900	4,358	< 20	< 20	84	84	3,900	460	4,444	3.5	70.0	130	1618.8	< 1	< 0.2	< 1	< 0.5	< 1	< 1
TP17	2.0-2.2	12/10/2021	FILL Silty CLAY: high plasticity, pale brown, with sub-rounded cobbles.	833233	5.0	No asbestos detected	2	< 0.4	36	150	17	< 0.1	18.0	88	--	--	< 0.1	< 0.1	< 0.1	< 0.2	< 0.1	< 0.3	< 0.5	< 20	< 20	< 50	< 50	< 50	< 20	< 20	< 50	< 50	< 100	< 100	< 100	< 0.5	< 0.5	1.2	< 0.5	< 0.1	< 0.2	< 0.1	< 0.5	< 1	< 0.5
TP17	2.5-2.7	12/10/2021	FILL Sandy CLAY: dark grey brown, with black staining from organic matter.	833233	11.9	--	19	0.8	41	260	320	0.2	13.0	220	--	--	< 0.1	< 0.1	< 0.1	< 0.2	< 0.1	< 0.3	< 0.5	< 20	< 20	< 50	< 50	< 50	< 20	< 20	< 50	< 50	< 100	< 100	< 100	1.0	25.0	40	482.2	< 0.1	< 0.2	< 0.1	< 0.5	< 1	< 0.5
TP18	0.3-0.5	12/10/2021	FILL Sandy GRAVEL: well rounded and angular to sub-angular, red, trace 'foreign materials (electric wire)	833233	6.8	No asbestos detected	8	< 0.4	43	18	12	< 0.1	< 5	31	--	--	< 0.1	< 0.1	< 0.1	< 0.2	< 0.1	< 0.3	< 0.5	< 20	< 20	51	< 50	51	< 20	< 20	< 50	< 50	< 100	< 100	< 100	< 0.5	< 0.5	1.2	< 0.5	< 0.1	< 0.2	< 0.1	--	--	--
TP18	2.0-2.2	12/10/2021	FILL Sandy GRAVEL: well rounded and angular to sub-angular, red	833233	7.6	No asbestos detected	20	< 0.4	14	68	48	< 0.1	43.0	670	--	--	< 0.1	< 0.1	< 0.1	< 0.2	< 0.1	< 0.3	< 0.5	< 20	< 20	< 50	< 50	< 50	< 20	< 20	< 50	< 50	< 100	< 100	< 100	< 0.5	< 0.5	1.2	< 0.5	< 0.1	< 0.2	< 0.1	--	--	--
TP19	0.4-0.6	12/10/2021	FILL Sandy GRAVEL: well rounded and angular to sub-angular, red	833233	10.7	No asbestos detected	< 2	< 0.4	< 5	29	18	< 0.1	6.2	43	--	--	< 0.1	< 0.1	< 0.1	< 0.2	< 0.1	< 0.3	< 0.5	< 20	< 20	< 50	< 50	< 50	< 20	< 20	< 50	< 50	< 100	< 100	< 100	< 0.5	< 0.5	1.2	0.8	< 0.1	< 0.2	< 0.1	--	--	--
TP19	1.7-1.9	12/10/2021	FILL Clayey GRAVEL: angular to sub-angular and rounded, dark brown to red, trace sand throughout.	833233	15.3	No asbestos detected	23	1.2	30	170	130	0.1	26.0	280	--	--	< 0.1	< 0.1	< 0.1	< 0.2	< 0.1	< 0.3	< 0.5	< 20	< 20	53	< 50	53	< 20	< 20	< 50	< 50	< 100	< 100	< 100	< 0.5	0.9	1.8	9.1	< 0.1	< 0.2	< 0.1	--	--	--
TP20	0.1-0.2	12/10/2021	FILL SAND: fine to coarse grained, pale brown.	833233	8.7	No asbestos detected	2	< 0.4	14	130	8	< 0.1	< 5	47	--	--	< 0.1	< 0.1	< 0.1	< 0.2	< 0.1	< 0.3	< 0.5	< 20	< 20	< 50	< 50	< 50	< 20	< 20	< 50	< 50	< 100	< 100	< 100	< 0.5	< 0.5	1.2	< 0.5	< 0.1	< 0.2	< 0.1	--	--	--
TP20	1.0-1.2	12/10/2021	SAND: medium grained, orange.	833233	9.6	--	< 2	< 0.4	< 5	< 5	< 5	< 0.1	< 5	< 5	--	--	< 0.1	< 0.1	< 0.1	< 0.2	< 0.1	< 0.3	< 0.5	< 20	< 20	< 50	< 50	< 50	< 20	< 20	< 50	< 50	< 100	< 100	< 100	< 0.5	< 0.5	1.2	< 0.5	< 0.1	< 0.2	< 0.1	--	--	--
TP21	0.0-0.3	12/10/2021	FILL Clayey GRAVEL: angular to sub-rounded, pale grey, with sand throughout	833233	22.3	No asbestos detected	< 2	< 0.4	200	< 5	< 5	< 0.1	< 5	< 5	--	--	< 0.1	< 0.1	< 0.1	< 0.2	< 0.1	< 0.3	< 0.5	< 20	< 20	< 50	< 50	< 50	< 20	< 20	< 50	< 50	< 100	< 100	< 100	< 0.5	< 0.5	1.2	< 0.5	< 0.1	< 0.2	< 0.1	--	--	--
TP21	1.6-1.8	12/10/2021	FILL SAND: coarse grained, with coarse grained sub-angular to sub-rounded gravel, trace fabric.	833233	24.0	No asbestos detected	50	0.7	5	200	360	0.1	11.0	180	--	--	< 0.1	< 0.1	< 0.1	< 0.2	< 0.1	< 0.3	< 0.5	< 20	< 20	< 50	< 50	< 50	< 20	< 20	< 50	< 50	< 100	< 100	< 100	< 0.5	< 0.5	1.2	< 0.5	< 0.1	< 0.2	< 0.1	--	--	--
TP22	0.1-0.2	12/10/2021	FILL Sandy CLAY: brown, trace rootlets.	833233	14.0	No asbestos detected	7	0.8	350	160	59	< 0.1	8.2	130	--	--	< 0.1	< 0.1	< 0.1	< 0.2	< 0.1	< 0.3	< 0.5	< 20	< 20	< 50	< 50	< 50	< 20	< 20	< 50	< 50	< 100	< 100	< 100	< 0.5	< 0.5	1.2	< 0.5	< 0.1	< 0.2	< 0.1	--	--	--
TP22	1.0-1.3	12/10/2021	FILL Clayey GRAVEL: angular to sub-angular, dark grey to black, with cobbles >60mm.	833233	13.3	No asbestos detected	3	< 0.4	11	41	25	< 0.1	6.9	57	--	--	< 0.1	< 0.1	< 0.1	< 0.2	< 0.1	< 0.3	< 0.5	< 20	< 20	< 50	< 50	< 50	< 20	< 20	< 50	< 50	< 100	< 100	< 100	< 0.5	< 0.5	1.2	< 0.5	< 0.1	< 0.2	< 0.1	--	--	--
TP22	2.0-2.3	12/10/2021	SAND: coarse grained, reddish yellow.	833233	12.6	--	15	< 0.4	< 5	20	34	< 0.1	5.2	69	--	--	< 0.1	< 0.1	< 0.1	< 0.2	< 0.1	< 0.3	< 0.5	< 20	< 20	< 50	< 50	< 50	< 20	< 20	< 50	< 50	< 100	< 100	< 100	< 0.5	< 0.5	1.2	< 0.5	< 0.1	< 0.2	< 0.1	--	--	--
TP23	0.6-0.8	13/10/2021	FILL Clayey GRAVEL: sub-angular to sub-rounded, dark grey to black, low plasticity clay, with cobbles	833233	13.4	No asbestos detected	5	< 0.4	6	52	23	< 0.1	14.0	58	--	--	< 0.1	< 0.1	< 0.1	< 0.2	< 0.1	< 0.3	< 0.5	< 20	< 20	< 50	< 50	< 50	< 20	< 20	< 50	< 50	< 100	< 100	< 100	< 0.5	< 0.5	1.2	< 0.5	< 0.1	< 0.2	< 0.1	--	--	--
TP23	2.1-2.3	13/10/2021	FILL Clayey SAND: pale brown, low plasticity clay, with bricks, ceramics, sub-angular gravel and sub-rounded cobbles.	833233	12.9	No asbestos detected	210	5.0	14	640	2,300	1.1	40.0	550	--		< 0.1	< 0.1	< 0.1	< 0.2	< 0.1	< 0.3	< 0.5	< 20	< 20	< 50	< 50	< 50	< 20	< 20	< 50	< 50	< 100	< 100	< 100	< 0.5	< 0.5	1.2	< 0.5	< 0.1	< 0.2	< 0.1	--	--	--
TP24	0.2-0.4	13/10/2021	FILL Clayey GRAVEL: sub-angular, red, well rounded nodules.	833233	14.8	No asbestos detected	11	0.5	14	72	34	0.1	22.0	77	--	--	< 0.1	< 0.1	< 0.1	< 0.2	< 0.1	< 0.3	< 0.5	< 20	< 20	< 50	< 50	< 50	< 20	< 20	< 50	< 50	< 100	< 100	< 100	< 0.5	< 0.5	1.2	< 0.5	< 0.1	< 0.2	< 0.1	--	--	--
TP24	1.2-1.4	13/10/2021	FILL Clayey GRAVEL: sub-angular, red, well rounded nodules.	833233	13.1	No asbestos detected	11	< 0.4	11	62	58	0.1	8.8	87	--	--	< 0.1	< 0.1	< 0.1	< 0.2	< 0.1	< 0.3	< 0.5	< 20	< 20	< 50	< 50	< 50	< 20	< 20	< 50	< 50	< 100	< 100	< 100	< 0.5	0.6	1.3	4.0	< 0.1	< 0.2	1.2	--	--	--
TP25	0.3-0.5	13/10/2021	FILL Clayey SAND: dark brown, with angular gravel, trace rootlets.	833233	8.9	No asbestos detected	5	0.4	21	200	47	< 0.1	14.0	120	--	--	< 0.1	< 0.1	< 0.1	< 0.2	< 0.1	< 0.3	< 0.5	< 20	< 20	< 50	< 50	< 50	< 20	< 20	< 50	< 50	< 100	< 100	< 100	< 0.5	< 0.5	1.2	< 0.5	< 0.1	< 0.2	< 0.1	--	--	--
TP25	2.2-2.4	13/10/2021	FILL SAND: coarse grained, yellow with grey laminae throughout.	833233	9.5	--	15	0.6	< 5	37	150	0.5	11.0	86	--	--	< 0.1	< 0.1	< 0.1	< 0.2	< 0.1	< 0.3	< 0.5	< 20	< 20	< 50	< 50	< 50	< 20	< 20	< 50	< 50	< 100	< 100	< 100	< 0.5	< 0.5	1.2	< 0.5	< 0.1	< 0.2	< 0.1	--	--	--
TP25	2.8-3.0	13/10/2021	SAND: orange to yellow.	833233	13.6	--	16	< 0.4	< 5	23	140	< 0.1	7.8	84	--	--	< 0.1	< 0.1	< 0.1	< 0.2	< 0.1	< 0.3	< 0.5	< 20	< 20	< 50	< 50	< 50	< 20	< 20	< 50	< 50	< 100	< 100	< 100	< 0.5	< 0.5	1.2	< 0.5	< 0.1	< 0.2	< 0.1	--	--	--
TP26	0.4-0.5	13/10/2021	FILL Sandy CLAY: low plasticity, dark brown, trace rootlets.	833233	17.4	No asbestos detected	25	1.6	23	470	500	0.2	12.0	500	--	--	< 0.1	< 0.1	< 0.1	< 0.2	< 0.1	< 0.3	< 0.5	< 20	< 20	< 50	68	68	< 20	< 20	< 50	< 50	< 100	< 100	< 100	< 0.5	< 0.5	1.2	< 0.5	< 0.1	< 0.2	< 0.1	--	--	--
QA6 *(Intra-laboratory duplicate of TP26/0.4-0.5)*	-	13/10/2021	As above	833233	--	--	38	1.7	39	580	560	0.2	19.0	1,000	--	--	< 0.1	< 0.1	< 0.1	< 0.2	< 0.1	< 0.3	< 0.5	< 20	< 20	< 50	< 50	< 50	< 20	< 20	< 50	< 50	< 100	< 100	< 100	< 0.5	< 0.5	1.2	< 0.5	< 0.1	< 0.2	< 0.1	--	--	--

						Asbestos	Heavy Metals								Leachability		BTEXN							TRH (NEPM 1999 Fractions)					TRH (NEPM 2013 fractions)							PAHs				OCP	OPP	PCB	Phenols		
						Asbestos Identification - Presence/ absence	Arsenic	Cadmium	Chromium (total)	Copper	Lead	Mercury	Nickel	Zinc	ASLP Arsenic Lead	ASLP Lead	Benzene	Toluene	Ethylbenzene	m + p-xylene	o-Xylene	Total xylene	Naphthalene	C6 - C9 Fraction	C10 - C14 Fraction	C15 - C28 Fraction	C29 - C36 Fraction	C10 - C36 Fraction (sum)	C6 - C10 Fraction	C6 - C10 Fraction minus BTEX (F1)	> C10 - C16 Fraction	> C10 - C16 Fraction minus Naphtha	> C16 - C34 Fraction	> C34 - C40 Fraction	> C10 - C40 Fraction (sum)	Naphthalene	Benzo(a)pyrene	Benzo(a)pyrene TEQ (LOR) / (Upper Bound)	Sum of PAHs	Total OCPs	Total OPPs	Total PCBs	Phenol	Pentachlorophenol	Cresols
Units of measurement						N/A	mg/kg	mg/kg	mg/kg	mg/kg	mg/kg	mg/kg	mg/kg	mg/kg	mg/L	mg/L	mg/kg	mg/kg	mg/kg	mg/kg	mg/kg	mg/kg	mg/kg	mg/kg	mg/kg	mg/kg	mg/kg	mg/kg	mg/kg	mg/kg	mg/kg	mg/kg	mg/kg	mg/kg	mg/kg	mg/kg	mg/kg	mg/kg	mg/kg	mg/kg	mg/kg	mg/kg	mg/kg	mg/kg	mg/kg
Limit of reporting (Eurofins laboratory)						0.01%w/w	2	0.4	5	5	5	0.1	5	5	0.005	0.01	0.1	0.1	0.1	0.2	0.1	0.3	0.5	20	20	50	50	50	20	20	50	50	100	100	100	0.5	0.5	0.5	0.5	0.05 to 0.2	0.2 to 2	0.5	<0.5	<1	<0.5
Limit of reporting (ALS laboratory)						--	5	4	2	5	5	0.1	2	5	--	--	0.2	0.5	0.5	0.5	0.5	0.5	1	10	50	100	100	50	10	10	50	50	100	100	50	0.5	0.5	0.5	0.5	0.2	0.2	0.1	<0.5	<2	--
Contamination assessment criteria (NEPM 1999, amended 2013)																																													
NEPM 1999 Table 1A (1) Health-based investigation level (HIL D - Commercial/ Industrial)							3,000	900	3,600	240,000	1,500	730	6,000	400,000																								40	4000	45 to 3,600	2,000 to 4,500	7	240,000	660	25,000
NEPM 1999 Table 1A (3) Health-based screening level for Vapour Intrusion (HSL D - Commercial / Industrial, Sand, 0-<1m)																	3	NL	NL			230	NL							260						NL										
Friebel and Nadebaum 2011, Table 4 Health-based screening level for Direct contact (HSL D Commercial / Industrial)																	430	99,000	27,000			81,000	11,000							26,000		20,000	27,000	38,000		11,000										
Friebel and Nadebaum 2011, Table B4 Health-based screening level for Direct contact (Intrusive maintenance worker)																	1,100	120,000	85,000			130,000	29,000							82,000		62,000	85,000	120,000		29,000										
Friebel and Nadebaum 2011, Health-based screening level for Vapour Intrusion (Intrusive maintenance worker, Sand, 0-<2 m)																	77	NL	NL			NL	NL													NL										
NEPM 1999 Table 1B (7) Management Limits (Commercial/ Industrial, Coarse texture)																													700[a]		1,000[a]		3,500	10,000											
Borehole ID	Sample Depth (m)	Sampling Date	Unit (Soil description)	Lab Report	PID (ppmv)																																								
QA6A *(Inter-laboratory duplicate of TP26/0.4-0.5)*	-	13/10/2021	As above	ES2137909	--	--	17	<1	11	351	178	0.1	8.0	259	--	--	<0.2	<0.5	<0.5	<0.5	<0.5	<0.5	<1	<10	<50	<100	<100	<50	<10	<10	<50	< 50	< 100	< 100	<50	< 0.5	< 0.5	1.2	< 0.5	< 0.2	< 0.2	< 0.1	--	--	--
TP26	1.6-1.8	13/10/2021	FILL Clayey SAND: pale brown to orange, with angular to sub-rounded gravel, lenses of coal wash throughout.	833233	21.9	No asbestos detected	33	3.7	6	240	690	2.1	11.0	220	--	--	< 0.1	< 0.1	< 0.1	< 0.2	< 0.1	< 0.3	< 0.5	< 20	< 20	230	200	430	< 20	< 20	< 50	< 50	380	110	490	< 0.5	< 0.5	1.2	< 0.5	< 0.1	< 0.2	< 0.1	--	--	--
TP26	2.2-2.4	13/10/2021	FILL Clayey SAND: pale brown to orange, with angular to sub-rounded gravel, lenses of coal wash throughout.	833233	22.6	No asbestos detected	120	3.3	27	1,600	840	1.4	56.0	1,100	--	--	< 0.1	< 0.1	< 0.1	< 0.2	< 0.1	< 0.3	< 0.5	< 20	< 20	< 50	< 50	< 50	< 20	< 20	< 50	< 50	< 100	< 100	< 100	< 0.5	1.5	2.7	17.7	< 1	< 0.2	< 1	--	--	--
TP27	0.0-0.2	13/10/2021	FILL Silty CLAY: dark brown, with rootlets.	833233	1.9	No asbestos detected	11	4.2	13	810	250	0.3	11.0	450	--	--	< 0.1	< 0.1	< 0.1	< 0.2	< 0.1	< 0.3	< 0.5	< 20	< 20	< 50	< 50	< 50	< 20	< 20	< 50	< 50	< 100	< 100	< 100	< 0.5	< 0.5	1.2	< 0.5	< 0.1	< 0.2	< 0.1	--	--	--
TP27	0.8-1.0	13/10/2021	FILL Sandy CLAY: brown, with cobbles and boulders (200-600mm), trace foreign materials (metal rope, timber, rubber).	833233	3.4	Chrysotile asbestos detected (fibre cement fragments and loose fibre bundles)	--	--	--	--	--	--	--	--	--	--	--	--	--	--	--	--	--	--	--	--	--	--	--	--	--	--	--	--	--	--	--	--	--	--	--	--	--	--	--
TP27	1.3-1.5	13/10/2021	FILL Sandy CLAY: brown, with cobbles and boulders (200-600mm), trace foreign materials (metal rope, timber, rubber).	833233	4.2	No asbestos detected	36	10.0	25	330	1,200	0.6	18.0	4,200	--	--	< 0.1	< 0.1	< 0.1	< 0.2	< 0.1	< 0.3	< 0.5	< 20	< 20	< 50	< 50	< 50	< 20	< 20	< 50	< 50	< 100	< 100	< 100	< 0.5	< 0.5	1.2	< 0.5	< 0.1	< 0.2	< 0.1	--	--	--
TP27	2.1-2.3	13/10/2021	SAND: pale brown to orange and yellow.	833233	2.3	--	69	3.1	< 5	230	560	0.3	25.0	700	--	--	< 0.1	< 0.1	< 0.1	< 0.2	< 0.1	< 0.3	< 0.5	< 20	< 20	< 50	< 50	< 50	< 20	< 20	< 50	< 50	< 100	< 100	< 100	< 0.5	< 0.5	1.2	< 0.5	< 0.1	< 0.2	< 0.1	--	--	--
ACM01	-	12/10/2021	MATERIAL FRAGMENT: Grey compressed fibre cement material observed on surface 8m north of TP22 (Good condition, 30-45mm length).	833233	--	Chrysotile asbestos detected.	--	--	--	--	--	--	--	--	--	--	--	--	--	--	--	--	--	--	--	--	--	--	--	--	--	--	--	--	--	--	--	--	--	--	--	--	--	--	--
ACM02	-	13/10/2021	MATERIAL FRAGMENT: Black/ brown refractive brick observed 10m south of TP23	833233	--	No asbestos detected	--	--	--	--	--	--	--	--	--	--	--	--	--	--	--	--	--	--	--	--	--	--	--	--	--	--	--	--	--	--	--	--	--	--	--	--	--	--	--
TP27/0.2-1.0-ACM	0.2-1.0	13/10/2021	'MATERIAL FRAGMENT: Grey fibre cement material observed at 0.0-1.0m (Good condition, 40-60mm length)	833233	--	Chrysotile asbestos detected.	--	--	--	--	--	--	--	--	--	--	--	--	--	--	--	--	--	--	--	--	--	--	--	--	--	--	--	--	--	--	--	--	--	--	--	--	--	--	--
Minimum						N/A	< 2	< 0.4	< 5	< 5	< 5	< 0.1	< 5	< 5	0.24	<0.01	< 0.1	< 0.1	< 0.1	< 0.2	< 0.1	< 0.3	< 0.5	< 20	< 20	< 50	< 50	< 50	< 20	< 20	< 50	< 50	< 100	< 100	< 100	<0.5	< 0.5	0.6	< 0.5	< 0.2	< 0.2	< 0.5	<0.5	<1	<0.5
Maximum						N/A	3,700	66	580	7,600	58,000	33	230	9,600	3.40	2.2	< 0.1	< 0.1	< 0.1	< 0.2	< 0.1	< 0.3	30	< 20	140	3,700	1,100	4,874	< 20	< 20	240	240	4,200	600	4,888	24	70	130	1,619	< 0.2	< 0.2	1.2	<0.5	<1	<0.5
TOTAL						50	76	76	76	76	76	76	76	76	2	2	66	66	66	66	66	66	67	67	67	67	67	67	67	67	67	67	67	67	67	66	66	66	66	62	62	62	11	11	11

Colour legend

- Concentration exceeds adopted human health criteria (HIL/HSL D)
- Concentration exceeds adopted human health criteria (Intrusive maintenance worker)
- Concentration exceeds adopted human health criteria (Management limits)
- Sample contains asbestos

Table Notes:

NEPM 1999	National Environment Protection (Assessment of Site Contamination) Measure (1999, as amended 2013), Schedule B1 Investigation Levels for Soil And Groundwater
Friebel & Nadebaum	Friebel and Nadebaum 2011, CRC Care Technical Report No. 10 Health Screening Levels for petroluem hydrocarbons in soil and groundwater. Part 2: Application Document
a	Separate management limits for BTEX and napthalene are not available hence these were not subtracted from the relevant fractions to obtain F1 & F2
b	Based on hexavalent chromium (i.e. Cr(VI))
HILs	Health Investigation Levels
HSL	Health screening level
LOR	Limit of reporting
NL	Non limiting
-	Not tested
ACM	Asbestos containing material
PID	Photoionisation detector
ppmv	parts per milliion by volume
mg/kg	milligrams per kilogram
mg/L	milligrams per litre

						Asbestos	Inorganics	Heavy Metals								BTEXN							TRH (NEPM 1999 Fractions)					TRH (NEPM 2013 fractions)							PAHs				OCP	OPP	PCB
						Asbestos Identification - Presence/ absence	pH (1:5 squeous extract)	Arsenic	Cadmium	Chromium (total)	Copper	Lead	Mercury	Nickel	Zinc	Benzene	Toluene	Ethylbenzene	m+p-xylene	o-Xylene	Total xylene	Naphthalene	C6 - C9 Fraction	C10 - C14 Fraction	C15 - C28 Fraction	C29 - C36 Fraction	C10 - C36 Fraction (sum)	C6 - C10 Fraction	C6 - C10 Fraction minus BTEX (F1)	>C10 - C16 Fraction	>C10 - C16 Fraction minus Naphthalene (F2)	>C16 - C34 Fraction	>C34 - C40 Fraction	>C10 - C40 Fraction (sum)	Naphthalene	Benzo(a)pyrene	Benzo(a)pyrene TEQ (LOR)/ (Upper Bound)	Sum of PAHs	Total OCPs	Total OPPs	Total PCBs
Units of measurement						N/A	-	mg/kg	mg/kg	mg/kg	mg/kg	mg/kg	mg/kg	mg/kg	mg/kg	mg/kg	mg/kg	mg/kg	mg/kg	mg/kg	mg/kg	mg/kg	mg/kg	mg/kg	mg/kg	mg/kg	mg/kg	mg/kg	mg/kg	mg/kg	mg/kg	mg/kg	mg/kg	mg/kg	mg/kg	mg/kg	mg/kg	mg/kg	mg/kg	mg/kg	mg/kg	mg/kg
Limit of reporting (Eurofins laboratory)						0.01%w/w	0.1	2	0.4	5	5	5	0.1	5	5	0.1	0.1	0.1	0.2	0.1	0.3	0.5	20	20	50	50	50	20	20	50	50	100	100	100	0.5	0.5	0.5	0.5	0.05	0.2	0.1
Limit of reporting (ALS laboratory)						--		5	4	2	5	5	0.1	2	5	0.2	0.5	0.5	0.5	0.5	0.5	1	10	50	100	100	50	10	10	50	50	100	100	50	0.5	0.5	0.5	0.5	0.2	0.2	0.1
Contamination assessment criteria (NEPM 1999, amended 2013)																																										
NEPM 1999 Table 1A (1) Health-based investigation level (HIL D - Commerical/ Industrial)								3,000	900	3,600	240,000	1,500	730	6,000	400,000																					40	4000	45 to 3,600	2,000 to 4,500	7
NEPM 1999 Table 1A (3) Health-based screening level for Vapour Intrusion (HSL D - Commercial / Industrial, Sand, 0-<1m)																3	NL	NL			230	NL							260		NL					NL						
Friebel and Nadebaum 2011, Table 4 Health-based screening level for Direct contact (HSL D Commercial / Industrial)																430	99,000	27,000			81,000	11,000							26,000		20,000	27,000	38,000		11,000							
Friebel and Nadebaum 2011, Table B4 Health-based screening level for Direct contact (Intrusive maintenance worker)																1,100	120,000	85,000			130,000	29,000							82,000		62,000	85,000	120,000		29,000							
Friebel and Nadebaum 2011, Health-based screening level for Vapour Intrusion (Intrusive maintenance worker, Sand, 0-<2 m)																77	NL	NL			NL	NL													NL							
NEPM 1999 Table 1B (7) Management Limits (Commercial/ Industrial, Coarse texture)																													700[a]		1,000[a]		3,500	10,000								
Borehole ID	**Sample Depth (m)**	**Sampling Date**	**Unit (Soil description)**	**Lab Report**	**PID (ppmv)**																																					
BH01	0.2 - 0.3	29/03/2022	Fill (Roadbase): gravelly SAND, dark brown, medium grained sand with angular to sub angular gravel	875262	5.1	No asbestos detected	8.2	7.3	<0.4	<5	210	18	<0.1	<5	73	<0.1	<0.1	<0.1	<0.2	<0.1	<0.3	<0.5	<20	<20	<50	<50	<50	<20	<20	<50	<50	<100	<100	<100	<0.5	<0.5	1.2	<0.5	<0.05	< 0.2	<0.1
BH01	0.8 - 0.9	29/03/2022	Fill (Reworked natural): Clayey SAND, pale brown to grey, medium grained sand with trace gravel	875262	4.3	-	8.2	-	-	-	-	-	-	-	-	-	-	-	-	-	-	-	-	-	-	-	-	-	-	-	-	-	-	-	-	-	-	-	-			-
BH01	1.4 - 1.5	29/03/2022	Fill (Reworked natural): Clayey SAND, pale brown to grey, medium grained sand with trace gravel	875262	3.9	No asbestos detected	8.7	2	<0.4	13	79	80	<0.1	16	110	<0.1	<0.1	<0.1	<0.2	<0.1	<0.3	<0.5	<20	<20	<50	<50	<50	<20	<20	<50	<50	<100	<100	<100	<0.5	<0.5	1.2	<0.5	<0.05	< 0.2	<0.1
BH02	0.1 - 0.2	5/04/2022	Fill (Roadbase): gravelly SAND, dark brown, medium grained sand with angular to sub angular gravel	877944	8.9	No asbestos detected	-	18	1.8	16	300	290	<0.1	18	520	<0.1	<0.1	<0.1	<0.2	<0.1	<0.3	<0.5	<20	<20	<50	<50	<50	<20	<20	<50	<50	<100	<100	<100	<0.5	<0.5	1.2	<0.5	<0.05	< 0.2	<0.1
QA3 (Intralab duplicate of BH02/0.1-0.2)	-	5/04/2022	-	877944	-	-	-	5.4	1.6	13	280	220	<0.1	18	400	<0.1	<0.1	<0.1	<0.2	<0.1	<0.3	<0.5	<20	<20	<50	<50	<50	<20	<20	<50	<50	<100	<100	<100	<0.5	<0.5	1.2	<0.5	<0.05	< 0.2	<0.1
QA3A (Interlab duplicate of BH02/0.1-0.2)	-	5/04/2022	-	ES2212526	-	-	-	11	2	10	371	260	<0.1	9	377	<0.2	<0.5	<0.5	<0.5	<0.5	<0.5	<1	<10	<50	<100	<100	<50	<10	<10	<50	<50	<100	<100	<50	<0.5	<0.5	1.2	<0.5	<0.2	< 0.2	<0.1
BH02	0.9 - 1	5/04/2022	Fill (Reworked natural): Gravelly SAND,brown, fine to medium grained sand with sub angular gravel	877944	11.2	No asbestos detected	-	2.6	<0.4	26	120	14	<0.1	16	71	<0.1	<0.1	<0.1	<0.2	<0.1	<0.3	<0.5	<20	<20	<50	<50	<50	<20	<20	<50	<50	<100	<100	<100	<0.5	<0.5	1.2	<0.5	<0.05	< 0.2	<0.1
BH03	0.6 - 0.7	5/04/2022	Fill (Coalwash): GRAVEL, fine to medium grained, dark grey to black with mulch	877944	6.3	No asbestos detected	-	19	2.7	19	460	1,200	0.3	26	820	<0.1	<0.1	<0.1	<0.2	<0.1	<0.3	<0.5	<20	<20	<50	<50	<50	<20	<20	<50	<50	<100	<100	<100	<0.5	<0.5	1.2	<0.5	<0.05	< 0.2	<0.1
BH03	1.4 - 1.5	5/04/2022	Fill (Reworked natural): Sandy CLAY, brownish orange, coarse grained sand with angular to sub angular gravel	877944	12.9	No asbestos detected	-	5.4	0.7	23	160	170	<0.1	18	270	<0.1	<0.1	<0.1	<0.2	<0.1	<0.3	<0.5	<20	<20	<50	<50	<50	<20	<20	<50	<50	<100	<100	<100	<0.5	<0.5	1.2	<0.5	<0.05	< 0.2	<0.1
BH04	0.1 - 0.2	5/04/2022	Fill: Clayey SAND, dark grey,with angular to sub angular gravel and coalwash	877944	4.0	No asbestos detected	-	6	1.2	340	370	250	0.2	18	160	<0.1	<0.1	<0.1	<0.2	<0.1	<0.3	<0.5	<20	<20	<50	<50	<50	<20	<20	<50	<50	<100	<100	<100	<0.5	<0.5	1.2	<0.5	<0.05	< 0.2	<0.1
BH04	0.5 - 0.6	5/04/2022	Fill (Coalwash): GRAVEL, fine to medium grained, dark grey to black with trace sand	877944	8.6	No asbestos detected	-	3.3	5.2	11	29	50	<0.1	27	1,100	<0.1	<0.1	<0.1	<0.2	<0.1	<0.3	<0.5	<20	<20	<50	<50	<50	<20	<20	<50	<50	<100	<100	<100	<0.5	<0.5	1.2	<0.5	<0.05	< 0.2	<0.1
BH05	0 - 0.1	5/04/2022	Fill (Topsoil): Silty CLAY with sand, dark brown with trace rootlets and sandstone gravel	877944	7.2	No asbestos detected	-	18	2.2	40	430	300	<0.1	19	1,200	<0.1	<0.1	<0.1	<0.2	<0.1	<0.3	<0.5	<20	<20	57	68	125	<20	<20	<50	<50	130	<100	130	<0.5	<0.5	1.2	<0.5	<0.05	< 0.2	<0.1
BH05	1.4 - 1.5	5/04/2022	Fill: Clayey SAND, brown	877944	8.4	No asbestos detected	-	7.4	<0.4	21	130	19	<0.1	22	88	<0.1	<0.1	<0.1	<0.2	<0.1	<0.3	<0.5	<20	<20	<50	<50	<50	<20	<20	<50	<50	<100	<100	<100	<0.5	<0.5	1.2	<0.5	<0.05	< 0.2	<0.1
BH06	0.1 - 0.2	4/04/2022	Fill: Sandy CLAY, dark brown with angular to sub angular gravel	877944	1.7	No asbestos detected	-	17	1.7	230	1,200	550	0.2	19	710	<0.1	<0.1	<0.1	<0.2	<0.1	<0.3	<0.5	<20	<20	180	170	350	<20	<20	<50	<50	340	120	460	<0.5	0.9	1.8	9.8	<0.5	< 0.2	<0.1
BH06	0.9 - 1	4/04/2022	Fill (Coalwash): GRAVEL, fine to medium grained, dark grey to black with trace sand	877944	2.9	No asbestos detected	-	570	9.6	160	3,800	16,000	0.5	95	24,000	<0.1	<0.1	<0.1	<0.2	<0.1	<0.3	<0.5	<20	<20	220	340	560	<20	<20	<50	<50	500	200	700	<0.5	0.5	1.2	4.5	<0.5	< 0.2	<0.1
BH06	1.7 - 1.8	4/04/2022	Fill (Coalwash): GRAVEL, fine to medium grained, dark grey to black with trace sand	877944	3.6	No asbestos detected	-	570	5.5	280	6,300	19,000	0.2	110	44,000	<0.1	<0.1	<0.1	<0.2	<0.1	<0.3	<0.5	<20	<20	68	76	144	<20	<20	<50	<50	140	<100	140	<0.5	<0.5	1.2	<0.5	<0.5	< 0.2	<0.1
BH07	0.1 - 0.2	4/04/2022	Fill (topsoil): Silty SAND, dark brown to brown, sand is fine to medium grained.	877944	1.6	No asbestos detected	-	2.6	<0.4	39	82	39	<0.1	11	66	<0.1	<0.1	<0.1	<0.2	<0.1	<0.3	<0.5	<20	<20	<50	<50	<50	<20	<20	<50	<50	<100	<100	<100	<0.5	<0.5	1.2	<0.5	<0.05	< 0.2	<0.1
BH07	0.9 - 1	4/04/2022	Fill: Clayey SAND, medium grained, brown, angular to sub-angular gravel.	877944	2.9	No asbestos detected	-	30	4.1	140	1,300	1,100	0.2	50	4,900	<0.1	<0.1	<0.1	<0.2	<0.1	<0.3	<0.5	<20	<20	<50	53	53	<20	<20	<50	<50	<100	<100	<100	<0.5	<0.5	1.2	<0.5	<0.05	< 0.2	<0.1
BH08	0 - 0.1	4/04/2022	Fill: Sandy CLAY, dark brown, with angular to sub angular cobbles	877944	4.3	No asbestos detected	-	10	1.2	23	600	190	0.1	17	300	<0.1	<0.1	<0.1	<0.2	<0.1	<0.3	<0.5	<20	<20	71	54	125	<20	<20	<50	<50	110	<100	110	<0.5	<0.5	1.2	<0.5	<0.05	< 0.2	<0.1
BH08_0.3-0.4	0.3 - 0.4	4/04/2022	Fill: Sandy CLAY, dark brown, with angular to sub angular cobbles and ACM fragments	877944	4.8	No asbestos detected	-	15	3.2	84	800	700	0.2	29	2,300	<0.1	<0.1	<0.1	<0.2	<0.1	<0.3	<0.5	<20	<20	<50	<50	<50	<20	<20	<50	<50	<100	<100	<100	<0.5	<0.5	1.2	<0.5	<0.05	< 0.2	<0.1
BH08_0.3-0.4 ACM	0.3 - 0.4	4/04/2022	MATERIAL FRAGMENT: Bonded ACM Fragments (6) observed at 0.3-0.4m (Good condition, 70-150mm)	877944	-	Chrysotile, amosite and crocidolite asbestos detected	-	-	-	-	-	-	-	-	-	-	-	-	-	-	-	-	-	-	-	-	-	-	-	-	-	-	-	-	-	-	-	-	-	-	-	-
BH09	0.1 - 0.2	4/04/2022	Fill (topsoil): Silty SAND, brown, medium to coarse grained sand with rootlets	877944	0.9	No asbestos detected	-	12	1	14	270	140	<0.1	14	260	<0.1	<0.1	<0.1	<0.2	<0.1	<0.3	<0.5	<20	<20	<50	<50	<50	<20	<20	<50	<50	<100	<100	<100	<0.5	<0.5	1.2	<0.5	<0.05	< 0.2	<0.1
BH09	0.9 - 1	4/04/2022	Fill: Silty clayey SAND, with angular to sub angular gravel	877944	1.9	No asbestos detected	-	9.9	1.3	23	420	290	<0.1	17	410	<0.1	<0.1	<0.1	<0.2	<0.1	<0.3	<0.5	<20	<40	<100	<100	<100	<20	<20	<100	<100	<200	<200	<200	<0.5	<0.5	1.2	<0.5	<0.5	< 0.2	<1
ACM-01	-	5/04/2022	MATERIAL FRAGMENT: Bonded ACM Fragmens (2) observed at surface approximately 5m west of BH05 (Good condition, 70x40x3mm)	877944	-	Chrysotile asbestos detected	-	-	-	-	-	-	-	-	-	-	-	-	-	-	-	-	-	-	-	-	-	-	-	-	-	-	-	-	-	-	-	-	-	-	-	-
Minimum						N/A	8.2	2	<0.4	<5	29	14	<0.1	<5	66	<0.1	<0.1	<0.1	<0.2	<0.1	<0.3	<0.5	<20	<40	<50	<50	<50	<20	<20	<50	<50	110	120	110	<0.5	<0.5	1.2	<0.5	<0.05	< 0.2	<0.1
Maximum						N/A	8.7	570	9.6	340	6300	19000	0.5	110	44000	<0.1	<0.1	<0.1	<0.2	<0.1	<0.3	<0.5	<20	<40	220	340	560	<20	<20	<100	<100	500	200	700	<0.5	0.9	1.8	9.8	<0.5	< 0.2	<1
Total						21	3	21	21	21	21	21	21	21	21	21	21	21	21	21	21	21	21	21	21	21	21	21	21	21	21	21	21	21	21	21	21	21	21	21	21	21

Colour legend

- Concentration exceeds adopted human health criteria (HIL/HSL D)
- Concentration exceeds adopted human health criteria (Intrusive maintenance worker)
- Concentration exceeds adopted human health criteria (Management limits)
- Sample contains asbestos

Table Notes:

NEPM 1999	National Environment Protection (Assessment of Site Contamination) Measure (1999, as amended 2013), Schedule B1 Investigation Levels for Soil And Groundwater
Friebel & Nadebaum 2011	Friebel and Nadebaum 2011, CRC Care Technical Report No. 10 Health Screening Levels for petroluem hydrocarbons in soil and groundwater. Part 2: Application Document
a	Separate management limits for BTEX and naothalene are not available hence these were not subtracted from the relevant fractions to obtain F1 & F2
b	Based on hexavalent chromium (i.e. Cr(VI))
HILs	Health Investigation Levels
HSL	Health screening level
LOR	Limit of reporting
NL	Non limiting
-	Not tested
ACM	Asbestos containing material
PID	Photoionisation detector
ppmv	parts per million by volume
mg/kg	milligrams per kilogram
mg/L	milligrams per litre

							Field parameters					Inorganics																			
							pH	Specific Conductivity (Ec @ 25°C)	Temperature	Dissolved Oxygen	Redox Potential	Ammonia as N	Ammonium as N	Nitrite as N	Nitrate as N	Reactive Phosphorus as P	Total Phosphorus as P	Total Hardness as CaCO3	Total Acidity as CaCO3	Total Dissolved Solids (Calc.)	Calcium	Magnesium	Sodium	Potassium	Chloride	Fluoride	Sulphate as SO4 - Turbidimetric	Bicarbonate Alkalinity as CaCO3	Carbonate Alkalinity as CaCO3	Hydroxide Alkalinity as CaCO3	Total Alkalinity as CaCO3
Units of measurement								µS/cm	°C	%	mv	mg/L	mg/L	mg/L	mg/L	mg/L	mg/L	mg/L	mg/L	mg/L	mg/L	mg/L	mg/L	mg/L	mg/L	mg/L	mg/L	mg/L	mg/L	mg/L	mg/L
Limit of reporting (ALS laboratory)							0.01	1	0.1	0.1	0.1	0.01	0.01	0.01	0.01	0.01	0.01	1	1	1	1	1	1	1	1	0.1	1	1	1	1	1
Limit of reporting (Eurofins laboratory)							--	--	--	--	--	0.01	0.01	0.02	0.02	0.01	0.01	5	10	10	0.5	0.5	0.5	0.5	1	0.5	5	20	10	20	20
Assessment criteria																															
Laboratory limits of reporting - adopted screening level for Total Recoverable Hydrocarbons																															
PFAS NEMP (2020) Ecological water quality guideline values (Table 5 Interim Marine - 95% Species Protection)																															
Friebel & Nadebaum 2011 Table A2 Groundwater HSLs for vapour intrusion (Commercial /Industrial, 2-<4m Sand)																															
ANZG 2018 Default Guidelines Values for toxicants (Marine water – 95% species protection)												0.91																			
ANZG 2018 Default Guidelines Values for toxicants (Marine water – 80% species protection)												1.7																			
ANZECC & ARMCANZ (2000) Default trigger values for physical and chemical stressors for South-east Australia for slightly disturbed marine ecosystems, applying to estuaries							7.0-8.5			80-110																					
Water Sample ID	Sample Date	Lab Batch	Observations	Standing water level		Evidence of oily sheen or NAPL?																									
				Depth (m bgl)	Reduced Level (m AHD)																										
SMW01	10/03/2021	EW2101111	Slightly turbid brown, no odour	2.07	0.50	N	6.46	2,019	23.9	5.6	122.8	<0.01	--	1.03	1.3	<0.01	--	1120	--	1380	396	33	52	12	38	7.5	692	489	<1	<1	489
QA1 (Intra-laboratory duplicate of SMW01)	10/03/2021	EW2101111	--	--	--	--	--	--	--	--	--	<0.01	--	1.02	1.06	<0.01	--	1140	--	1370	401	34	53	12	38	7.3	701	505	<1	<1	505
QA1A (Inter-laboratory duplicate of SMW01)	10/03/2021	779367	--	--	--	--	--	--	--	--	--	--	--	--	--	--	--	--	--	--	--	--	--	--	--	--	--	--	--	--	--
OHMW28	10/03/2021	EW2101111	Clear, no odour	1.77	0.64	N	6.48	2,880	23.6	3.7	-72.6	0.99	--	<0.01	0.12	<0.01	--	1460	--	1960	503	50	108	29	45	7.4	1460	398	<1	<1	398
OHMW20	10/03/2021	EW2101111	Clear, no odour	2.38	0.51	N	6.82	14,224	21.8	5.9	129.8	0.69	--	0.02	0.09	<0.01	--	1720	--	10100	227	279	2950	73	4770	3.2	1560	475	<1	<1	475
SMW01	21/10/2021	EW2104433	Clear, no odour	2.11	0.46	N	6.75	1,901	20.8	2.1	137	<0.01	<0.01	0.06	3.76	0.02	0.19	1070	44	1230	383	28	49	8	37	8.1	721	459	<1	<1	459
OHMW28	21/10/2021	EW2104433 / ES2140160	Clear- moderate rotten egg odour	1.86	0.55	N	6.61	2,960	20.6	3.0	-75.4	0.85	0.81	<0.01	0.03	<0.02	0.22	1600	57	1880	567	46	102	29	38	6.6	1570	402	<1	<1	402
QA1 (Intra-laboratory duplicate of OHMW28)	21/10/2021	EW2104433 / ES2140160	--	--	--	--	--	--	--	--	--	0.85	0.81	<0.01	0.03	<0.02	0.21	1620	57	1880	572	46	102	29	36	6.9	1550	395	<1	<1	395
QA1A (Intra-laboratory duplicate of OHMW28)	21/10/2021	834054	--	--	--	--	--	--	--	--	--	1.3	1.4	< 0.02	0.04	0.01	0.24	1600	28	2700	560	48	100	30	44	6.2	1700	380	< 10	< 20	380
OHMW20	21/10/2021	834054 / 838322	Slight yellowish colour, slight rotten egg odour	2.44	0.45	N	6.38	23,158	20.6	4.8	72.16	0.77	0.71	<0.01	0.05	<0.01	0.07	3040	53	14800	354	525	5000	95	7550	2.2	2080	428	<1	<1	428

Colour legend:

- Concentration exceeds HSLs Friebel & Nadebaum (2011) Human-health
- Concentration exceeds ANZG (2018) Aquatic ecosystems - 95% species protection
- Concentration exceeds ANZG (2018) Aquatic ecosystems - 80% species protection
- Concentration exceeds ANZECC / & ARMCANZ (2000) Physical and chemical stressors
- Concentration exceeds PFAS NEMP
- Laboratory limits of reporting exceed adopted criteria

Table Notes:

Friebel & Nadebaum (2011) Friebel & Nadebaum (2011) Health Screening Levels for Petroleum Hydrocarbons in Soil and Groundwater (technical paper No.10) Guidelines, CRC for Contamination Assessment and Remediation of the Environment (CRC CARE)

ANZG (2018) Australian and New Zealand Guidelines for Fresh and Marine Water Quality (ANZG, August 2018), accessed 8 October 2018, URL: http://waterquality.gov.au/anz-guidelines

ANZECC & ARMCANZ (2000) ANZECC & ARMCANZ 2000, National Water Quality Management Strategy, Australian and New Zealand Guidelines for Fresh and Marine Water Quality, Protection of Aquatic Ecosystems

PFAS NEMP (2020) PFAS National Environmental Management Plan, Version 2.0 - January 2020, National Chemicals Working Group of the Heads of EPAs Australia and New Zealand

[A] No hardness corrections applied to default guideline values. Assumed 30mg/L CaCO3 applies.

[B] 99% protection of species adopted to account for potential bioaccumulative effects

[C] Low reliability values adopted

[D] Default guideline value assumes chromium (VI)

[E] Default guideline value assumes m-xylene

							BTEXN							TRH - 1999 fractions					TRH - 2013 fractions					
							Benzene	Toluene	Ethylbenzene	m+p-xylene	o-xylene	Xylenes (total)	Naphthalene	TRH C6 - C9	TRH C10 - C14	TRH C15 - C28	TRH C29 - C36	Sum of TPH C10-C36	TRH C6 - C10	TRH C6 - C10 less BTEX (F1)	TRH >C10 - C16	TRH >C10 - C16 less Naphthalene (F2)	TRH >C16 - C34	TRH >C34 - C40
Units of measurement							mg/L	mg/L	mg/L	mg/L	mg/L	mg/L	mg/L	mg/L	mg/L	mg/L	mg/L	mg/L	mg/L	mg/L	mg/L	mg/L	mg/L	mg/L
Limit of reporting (ALS laboratory)							0.001	0.002	0.002	0.002	0.001	0.002	0.005	0.02	0.05	0.1	0.1	0.1	0.02	0.02	0.1	0.1	0.1	0.1
Limit of reporting (Eurofins laboratory)							0.001	0.001	0.001	0.002	0.001	0.003	0.01	0.02	0.05	0.1	0.1	0.1	0.02	0.02	0.05	0.05	0.1	0.1
Assessment criteria																								
Laboratory limits of reporting - adopted screening level for Total Recoverable Hydrocarbons													0.005	0.02	0.05	0.1	0.1	0.1	0.02	0.02	0.1	0.1	0.1	0.1
PFAS NEMP (2020) Ecological water quality guideline values (Table 5 Interim Marine - 95% Species Protection)																								
Friebel & Nadebaum 2011 Table A2 Groundwater HSLs for vapour intrusion (Commercial /Industrial, 2-<4m Sand)							4.9	NL	NL			NL								6.2		NL		
ANZG 2018 Default Guidelines Values for toxicants (Marine water – 95% species protection)							0.7	0.18	0.08	0.075[E]			0.050[B]											
ANZG 2018 Default Guidelines Values for toxicants (Marine water – 80% species protection)							1.3	0.33	0.16	0.15[E]			0.120[B]											
ANZECC & ARMCANZ (2000) Default trigger values for physical and chemical stressors for South-east Australia for slightly disturbed marine ecosystems, applying to estuaries																								
Water Sample ID	Sample Date	Lab Batch	Observations	Standing water level		Evidence of oily sheen or NAPL?																		
				Depth (m bgl)	Reduced Level (m AHD)																			
SMW01	10/03/2021	EW2101111	Slightly turbid brown, no odour	2.07	0.50	N	<0.001	<0.002	<0.002	<0.002	<0.002	<0.002	<0.005	<0.02	<0.05	<0.1	<0.05	<0.05	<0.02	0.02	<0.1	<0.1	<0.1	<0.1
QA1 (Intra-laboratory duplicate of SMW01)	10/03/2021	EW2101111	--	--	--	--	<0.001	<0.002	<0.002	<0.002	<0.002	<0.002	<0.005	<0.02	<0.05	<0.1	<0.05	<0.05	<0.02	<0.02	<0.1	<0.1	<0.1	<0.1
QA1A (Inter-laboratory duplicate of SMW01)	10/03/2021	779367	--	--	--	--	<0.001	<0.001	<0.001	<0.002	<0.001	<0.003	<0.01	<0.02	0.16	<0.1	<0.1	0.16	<0.02	<0.02	0.14	0.14	<0.1	<0.1
OHMW28	10/03/2021	EW2101111	Clear, no odour	1.77	0.64	N	<0.001	<0.002	<0.002	<0.002	<0.002	<0.002	<0.005	<0.02	<0.05	<0.1	<0.05	<0.05	<0.02	<0.02	<0.1	<0.1	<0.1	<0.1
OHMW20	10/03/2021	EW2101111	Clear, no odour	2.38	0.51	N	<0.001	<0.002	<0.002	<0.002	<0.002	<0.002	<0.005	<0.02	<0.05	<0.1	<0.05	<0.05	<0.02	<0.02	<0.1	<0.1	<0.1	<0.1
SMW01	21/10/2021	EW2104433	Clear, no odour	2.11	0.46	N	<0.001	<0.002	<0.002	<0.002	<0.002	<0.002	<0.005	<0.02	<0.05	<0.1	<0.05	<0.05	<0.02	<0.02	<0.1	<0.1	<0.1	<0.1
OHMW28	21/10/2021	EW2104433 / ES2140160	Clear- moderate rotten egg odour	1.86	0.55	N	<0.001	<0.002	<0.002	<0.002	<0.002	<0.002	<0.005	<0.02	<0.05	<0.1	<0.05	<0.05	<0.02	<0.02	<0.1	<0.1	<0.1	<0.1
QA1 (Intra-laboratory duplicate of OHMW28)	21/10/2021	EW2104433 / ES2140160	--	--	--	--	<0.001	<0.002	<0.002	<0.002	<0.002	<0.002	<0.005	<0.02	<0.05	<0.1	<0.05	<0.05	<0.02	<0.02	<0.1	<0.1	<0.1	<0.1
QA1A (Intra-laboratory duplicate of OHMW28)	21/10/2021	834054	--	--	--	--	< 0.001	< 0.001	< 0.001	< 0.002	< 0.001	< 0.003	< 0.01	< 0.02	< 0.05	< 0.1	< 0.1	< 0.1	< 0.02	< 0.05	< 0.05	< 0.05	< 0.1	<0.1
OHMW20	21/10/2021	834054 / 838322	Slight yellowish colour, slight rotten egg odour	2.44	0.45	N	<0.001	<0.002	<0.002	<0.002	<0.002	<0.002	<0.005	<0.02	<0.05	<0.1	<0.05	<0.05	<0.02	<0.02	<0.1	<0.1	<0.1	<0.1

Colour legend:

- Concentration exceeds HSLs Friebel & Nadebaum (2011) Human-health
- Concentration exceeds ANZG (2018) Aquatic ecosystems - 95% species protection
- Concentration exceeds ANZG (2018) Aquatic ecosystems - 80% species protection
- Concentration exceeds ANZECC / & ARMCANZ (2000) Physical and chemical stressors
- Concentration exceeds PFAS NEMP
- Laboratory limits of reporting exceed adopted criteria

Table Notes:

Friebel & Nadebaum (2011) Friebel & Nadebaum (2011) Health Screening Levels for Petroleum Hydrocarbons in Soil and Groundwater (technical paper No.10) Guidelines, CRC for Contamination Assessment and Remediation of the Environment (CRC CARE)

ANZG (2018) Australian and New Zealand Guidelines for Fresh and Marine Water Quality (ANZG, August 2018), accessed 8 October 2018, URL: http://waterquality.gov.au/anz-guidelines

ANZECC & ARMCANZ (2000) ANZECC & ARMCANZ 2000, National Water Quality Management Strategy, Australian and New Zealand Guidelines for Fresh and Marine Water Quality, Protection of Aquatic Ecosystems

PFAS NEMP (2020) PFAS National Environmental Management Plan, Version 2.0 - January 2020, National Chemicals Working Group of the Heads of EPAs Australia and New Zealand

[A] No hardness corrections applied to default guideline values. Assumed 30mg/L CaCO3 applies.

[B] 99% protection of species adopted to account for potential bioaccumulative effects

[C] Low reliability values adopted

[D] Default guideline value assumes chromium (VI)

[E] Default guideline value assumes m-xylene

							Heavy Metals (Dissolved)													Heavy Metals (Total, unfiltered)			PAHs						Phenolic compounds		
							Aluminium	Arsenic	Cadmium	Chromium (total)	Cobalt (filtered)	Copper	Iron	Lead	Mercury	Nickel	Selenium	Uranium (filtered)	Zinc	Aluminium	Iron	Manganese	Anthracene	Benzo(a)pyrene	Fluoranthene	Naphthalene	Phenanthrene	Total PAH*	Pentachlorophenol	Phenol	Other Phenols
Units of measurement							mg/L	mg/L	mg/L	mg/L	mg/L	mg/L	mg/L	mg/L	mg/L	mg/L	mg/L	mg/L	mg/L	mg/L	mg/L	mg/L	µg/L	µg/L	µg/L	µg/L	µg/L	µg/L	µg/L	µg/L	µg/L
Limit of reporting (ALS laboratory)							0.01	0.001	0.0001	0.001	0.001	0.001	0.05	0.001	0.0001	0.001	0.01	0.001	0.005	0.01	0.05	0.001	0.1	0.05	0.1	0.1	0.1	0.1	0.05	0.1	0.05 to 0.1
Limit of reporting (Eurofins laboratory)							0.05	0.001	0.0002	0.001	0.001	0.001	0.05	0.001	0.0001	0.001	0.001	0.005	0.005	0.05	0.05	0.005	0.01	0.01	0.01	0.01	0.01	0.01	--	--	--
Assessment criteria																															
Laboratory limits of reporting - adopted screening level for Total Recoverable Hydrocarbons																															
PFAS NEMP (2020) Ecological water quality guideline values (Table 5 Interim Marine - 95% Species Protection)																															
Friebel & Nadebaum 2011 Table A2 Groundwater HSLs for vapour intrusion (Commercial /Industrial, 2-<4m Sand)																										NL					
ANZG 2018 Default Guidelines Values for toxicants (Marine water – 95% species protection)									0.0007[B]	0.0044[D]		0.0013		0.0044[C]	0.0001[B]	0.007[B]			0.015				0.01[B]	0.1[B]	1.0[B]	50[B]	0.6[B]		11	400	
ANZG 2018 Default Guidelines Values for toxicants (Marine water – 80% species protection)									0.036	0.085		0.008		0.012	0.0014	0.56			0.043				7.0	0.7	2.0	120	8.0		55		
ANZECC & ARMCANZ (2000) Default trigger values for physical and chemical stressors for South-east Australia for slightly disturbed marine ecosystems, applying to estuaries																															
Water Sample ID	Sample Date	Lab Batch	Observations	Standing water level		Evidence of oily sheen or NAPL?																									
				Depth (m bgl)	Reduced Level (m AHD)																										
SMW01	10/03/2021	EW2101111	Slightly turbid brown, no odour	2.07	0.50	N	0.03	0.044	0.0034	<0.001	--	0.019	0.57	0.016	<0.0001	0.127	0.05	--	0.494	--	--	--	<0.1	<0.05	<0.1	<0.1	<0.1	<0.1	<0.05	<0.1	<LOR
QA1 (Intra-laboratory duplicate of SMW01)	10/03/2021	EW2101111	--	--	--	--	0.03	0.044	0.0033	<0.001	--	0.019	0.58	0.018	<0.0001	0.125	0.05	--	0.499	--	--	--	<0.1	<0.05	<0.1	<0.1	<0.1	<0.1	<0.05	<0.1	<LOR
QA1A (Inter-laboratory duplicate of SMW01)	10/03/2021	779367	--	--	--	--	<0.05	0.026	0.0041	0.001	--	0.022	0.12	0.007	0.0002	0.110	0.057	--	0.500	--	--	--	<0.01	<0.01	<0.01	<0.01	<0.01	<0.01	--	--	--
OHMW28	10/03/2021	EW2101111	Clear, no odour	1.77	0.64	N	<0.01	0.066	<0.0001	<0.001	--	0.004	15.4	<0.001	<0.0001	0.019	<0.01	--	<0.005	--	--	--	<0.1	<0.05	<0.1	<0.1	<0.1	<0.1	<0.05	<0.1	<LOR
OHMW20	10/03/2021	EW2101111	Clear, no odour	2.38	0.51	N	<0.01	<0.001	0.0053	<0.001	--	<0.001	0.19	<0.001	<0.0001	0.010	<0.01	--	0.034	--	--	--	<0.1	<0.05	<0.1	<0.1	<0.1	<0.1	<0.05	<0.1	<LOR
SMW01	21/10/2021	EW2104433	Clear, no odour	2.11	0.46	N	0.02	0.017	0.003	<0.001	0.008	0.036	0.18	0.014	<0.0001	0.094	0.06	0.008	0.849	0.66	2.38	0.072	<0.001	<0.001	<0.001	<0.004	<0.002	<0.001	<0.05	<0.1	<LOR
OHMW28	21/10/2021	EW2104433 / ES2140160	Clear- moderate rotten egg odour	1.86	0.55	N	<0.01	0.052	<0.0001	<0.001	0.006	<0.001	17.4	<0.001	<0.0001	0.027	<0.01	0.001	<0.005	0.07	20.2	1.15	<0.001	<0.001	<0.001	<0.004	<0.002	<0.001	<0.05	<0.1	<LOR
QA1 (Intra-laboratory duplicate of OHMW28)	21/10/2021	EW2104433 / ES2140160	--	--	--	--	<0.01	0.053	<0.0001	<0.001	0.006	<0.001	17.0	<0.001	<0.0001	0.027	<0.01	0.001	<0.005	0.08	23.5	1.26	<0.001	<0.001	<0.001	<0.004	<0.002	<0.001	<0.05	<0.1	<LOR
QA1A (Intra-laboratory duplicate of OHMW28)	21/10/2021	834054	--	--	--	--	< 0.05	< 0.001	< 0.0002	< 0.001	0.005	< 0.001	20.0	< 0.001	< 0.0001	< 0.001	< 0.001	<0.005	< 0.005	0.08	24	1.4	<0.01	<0.01	<0.01	<0.01	<0.01	<0.01	--	--	--
OHMW20	21/10/2021	834054 / 838322	Slight yellowish colour, slight rotten egg odour	2.44	0.45	N	<0.01	<0.001	0.0007	<0.001	0.137	0.026	4.31	<0.001	<0.0001	0.013	<0.01	<0.001	<0.005	0.130	4.78	6.71	<0.001	<0.001	<0.001	<0.004	<0.002	<0.001	<0.05	<0.1	<LOR

Colour legend:

- Concentration exceeds HSLs Friebel & Nadebaum (2011) Human-health
- Concentration exceeds ANZG (2018) Aquatic ecosystems - 95% species protection
- Concentration exceeds ANZG (2018) Aquatic ecosystems - 80% species protection
- Concentration exceeds ANZECC / & ARMCANZ (2000) Physical and chemical stressors
- Concentration exceeds PFAS NEMP
- Laboratory limits of reporting exceed adopted criteria

Table Notes:

Friebel & Nadebaum (2011) Friebel & Nadebaum (2011) Health Screening Levels for Petroleum Hydrocarbons in Soil and Groundwater (technical paper No.10) Guidelines, CRC for Contamination Assessment and Remediation of the Environment (CRC CARE)

ANZG (2018) Australian and New Zealand Guidelines for Fresh and Marine Water Quality (ANZG, August 2018), accessed 8 October 2018, URL: http://waterquality.gov.au/anz-guidelines

ANZECC & ARMCANZ (2000) ANZECC & ARMCANZ 2000, National Water Quality Management Strategy, Australian and New Zealand Guidelines for Fresh and Marine Water Quality, Protection of Aquatic Ecosystems

PFAS NEMP (2020) PFAS National Environmental Management Plan, Version 2.0 - January 2020, National Chemicals Working Group of the Heads of EPAs Australia and New Zealand

[A] No hardness corrections applied to default guideline values. Assumed 30mg/L CaCO3 applies.

[B] 99% protection of species adopted to account for potential bioaccumulative effects

[C] Low reliability values adopted

[D] Default guideline value assumes chromium (VI)

[E] Default guideline value assumes m-xylene

							OCP										OPP				PCBs	Volatile Halogenated Compounds (aka Volatile Organic Compounds)				PFAS			
							Aldrin	Chlordane	DDT	Endosulfan	Endrin	Heptachlor	Lindane	Methoxychlor	Toxaphene	Total OCP	Chlorpyrifos	Fenitrothion	Temephos	Other OPP	Total PCBs	Total Fumigants	Halogenated Aliphatic Compounds	Halogenated Aromatic Compounds	Trihalomethanes	PFOS	Sum of PFHxS and PFOS	PFOA	Sum of PFAS (WA DER List)
Units of measurement							µg/L	µg/L	µg/L	µg/L	µg/L	µg/L	µg/L	µg/L	µg/L	µg/L	µg/L	µg/L	µg/L	µg/L	µg/L	µg/L	µg/L	µg/L	µg/L	µg/L	µg/L	µg/L	µg/L
Limit of reporting (ALS laboratory)							0.01	0.01	0.01	0.01	0.01	0.005	--	0.01	--	0.005-0.1	0.02	2	0.02	0.2 to 10	0.1	5	5 to 50	5	5	0.01	0.01	0.01	0.01
Limit of reporting (Eurofins laboratory)							--	--	--	--	--	--	--	--	--	--	--	--	--	--	--	--	--	--	--	0.01	0.01	0.01	0.05
Assessment criteria																													
Laboratory limits of reporting - adopted screening level for Total Recoverable Hydrocarbons																													
PFAS NEMP (2020) Ecological water quality guideline values (Table 5 Interim Marine - 95% Species Protection)																										0.13		220	
Friebel & Nadebaum 2011 Table A2 Groundwater HSLs for vapour intrusion (Commercial /Industrial, 2-<4m Sand)																													
ANZG 2018 Default Guidelines Values for toxicants (Marine water – 95% species protection)							0.003[F]	0.001[F]	0.0004[F]	0.005[B]	0.004[B]	0.0004[F]	0.007[F]	0.004[F]	0.0006[F]		0.009	0.001[F]	0.05										
ANZG 2018 Default Guidelines Values for toxicants (Marine water – 80% species protection)										0.05	0.02						0.3		3.6										
ANZECC & ARMCANZ (2000) Default trigger values for physical and chemical stressors for South-east Australia for slightly disturbed marine ecosystems, applying to estuaries																													
Water Sample ID	Sample Date	Lab Batch	Observations	Standing water level		Evidence of oily sheen or NAPL?																							
				Depth (m bgl)	Reduced Level (m AHD)																								
SMW01	10/03/2021	EW2101111	Slightly turbid brown, no odour	2.07	0.50	N	<0.01	<0.01	<0.01	<0.01	<0.01	<0.005	--	<0.01	--	<LOR	<0.02	<2	<0.02	<LOR	<0.1	<5	<LOR	<5	<5	--	--	--	--
QA1 (Intra-laboratory duplicate of SMW01)	10/03/2021	EW2101111	--	--	--	--	<0.01	<0.01	<0.01	<0.01	<0.01	<0.005	--	<0.01	--	<LOR	<0.02	<2	<0.02	<LOR	<0.1	<5	<LOR	<5	<5	--	--	--	--
QA1A (Inter-laboratory duplicate of SMW01)	10/03/2021	779367	--	--	--	--	--	--	--	--	--	--	--	--	--	--	--	--	--	--	--	--	--	--	--	--	--	--	--
OHMW28	10/03/2021	EW2101111	Clear, no odour	1.77	0.64	N	<0.01	<0.01	<0.01	<0.01	<0.01	<0.005	--	<0.01	--	<LOR	<0.02	<2	0.02	<LOR	<0.1	<5	<LOR	<5	<5	--	--	--	--
OHMW20	10/03/2021	EW2101111	Clear, no odour	2.38	0.51	N	<0.01	<0.01	<0.01	<0.01	<0.01	<0.005	--	<0.01	--	<LOR	<0.02	<2	0.02	<LOR	<0.1	<5	<LOR	<5	<5	--	--	--	--
SMW01	21/10/2021	EW2104433	Clear, no odour	2.11	0.46	N	<0.01	<0.01	<0.01	<0.01	<0.01	<0.005	--	<0.01	--	<LOR	<0.02	<2	<0.02	<LOR	<0.1	<5	<LOR	<5	<5	0.08	0.08	<0.01	0.08
OHMW28	21/10/2021	EW2104433 / ES2140160	Clear- moderate rotten egg odour	1.86	0.55	N	<0.01	<0.01	<0.01	<0.01	<0.01	<0.005	--	<0.01	--	<LOR	<0.02	<2	<0.02	<LOR	<0.1	<5	<LOR	<5	<5	<0.01	<0.01	<0.01	<0.01
QA1 (Intra-laboratory duplicate of OHMW28)	21/10/2021	EW2104433 / ES2140160	--	--	--	--	<0.01	<0.01	<0.01	<0.01	<0.01	<0.005	--	<0.01	--	<LOR	<0.02	<2	<0.02	<LOR	<0.1	<5	<LOR	<5	<5	<0.01	<0.01	<0.01	<0.01
QA1A (Intra-laboratory duplicate of OHMW28)	21/10/2021	834054	--	--	--	--	--	--	--	--	--	--	--	--	--	--	--	--	--	--	--	--	--	--	--	0.02	0.02	< 0.01	< 0.05
OHMW20	21/10/2021	834054 / 838322	Slight yellowish colour, slight rotten egg odour	2.44	0.45	N	<0.01	<0.01	<0.01	<0.01	<0.01	<0.005	--	<0.01	--	<LOR	<0.02	<2	<0.02	<LOR	<0.1	<5	<LOR	<5	<5	<0.01	<0.01	<0.01	<0.01

Colour legend:

- Concentration exceeds HSLs Friebel & Nadebaum (2011) Human-health
- Concentration exceeds ANZG (2018) Aquatic ecosystems - 95% species protection
- Concentration exceeds ANZG (2018) Aquatic ecosystems - 80% species protection
- Concentration exceeds ANZECC / & ARMCANZ (2000) Physical and chemical stressors
- Concentration exceeds PFAS NEMP
- Laboratory limits of reporting exceed adopted criteria

Table Notes:

Friebel & Nadebaum (2011) Friebel & Nadebaum (2011) Health Screening Levels for Petroleum Hydrocarbons in Soil and Groundwater (technical paper No.10) Guidelines, CRC for Contamination Assessment and Remediation of the Environment (CRC CARE)

ANZG (2018) Australian and New Zealand Guidelines for Fresh and Marine Water Quality (ANZG, August 2018), accessed 8 October 2018, URL: http://waterquality.gov.au/anz-guidelines

ANZECC & ARMCANZ (2000) ANZECC & ARMCANZ 2000, National Water Quality Management Strategy, Australian and New Zealand Guidelines for Fresh and Marine Water Quality, Protection of Aquatic Ecosystems

PFAS NEMP (2020) PFAS National Environmental Management Plan, Version 2.0 - January 2020, National Chemicals Working Group of the Heads of EPAs Australia and New Zealand

[A] No hardness corrections applied to default guideline values. Assumed 30mg/L CaCO3 applies.

[B] 99% protection of species adopted to account for potential bioaccumulative effects

[C] Low reliability values adopted

[D] Default guideline value assumes chromium (VI)

[E] Default guideline value assumes m-xylene

Appendix C **Engineering logs**

Member of the Surbana Jurong Group

local people
global experience

Explanatory Notes of Abbreviations and Terms

Used on Borehole and Excavation Logs

General

The “Geological and Engineering Log” presents data from drilling or excavation operations where material recovery is soil and or rock. Data presented is a combination of material recovered, regular sampling and in-situ testing. Excavations may present data obtained on the subsurface profile from observations of natural or man-made excavations. Logs may contain scaled graphical presentations, photography, or downhole imagery results. Logs may not contain all data types presented in these notes.

The “Non Core Drill Hole Engineering Log” presents data from drilling operations where a core barrel has not been used. The material is penetrated using methods other than those designed to recover core and is commonly soil or extremely to highly weathered. The “Cored Drill Hole Engineering Log” presents data from drilling operations where a core barrel has been used. The “Excavation - Geological Log” presents data obtained on the subsurface profile from observations of excavations, either natural or anthropogenic.

As far as is practicable, the data contained on the log sheet is factual. Some interpretation is inevitable with respect to the:

a. assessment of material boundaries in areas of partial sampling and recovery,
b. location of areas of core loss,
c. description and classification of material,
d. estimate of field strength, and
e. identification of drilling induced fractures.

Material description and classification is generally based on AS1726-2017 (as amended).

Drilling Method

Code	Description
ADT	Auger drilling with TC-bit
ADV	Auger drilling V-bit
AS	Auger screwing
AT	Air track
CA	Casing advancer
CC	Concrete core
CTR	Cable tool rig
DB	Wash bore drag bit
HA	Hand auger
HAND	Hand methods
HF	Hollow flight auger
HMLC	Diamond core 63.5 mm diameter
HQ / HRQ	Wire line core barrel 63.5 mm diameter
HQ3	Wire line core barrel 61.1 mm diameter
NDD	Non destructive drilling
NMLC	Diamond core 51.9 mm diameter
NQ	Wire line core barrel 47.6 mm diameter
NQ3	Wire line core barrel 45.1 mm diameter
PT	Continuous push tube
PQ	Wire line core barrel 85.0 mm diameter
RAB	Rotary air blast
RC	Reverse circulation
RD	Rotary blade or drag bit
RR	Rock roller
RT	Rotary tricone bit
SD	Sonic drilling
TBX	Tube-X
VC	Vibro-core drilling
WB	Wash bore drilling

Drilling Penetration

Ease of penetration in non-core drilling

Term	Description
VE	Very easy
E	Easy
F	Firm
H	Hard
VH	Very hard

Support and Casing

Code	Description	Code	Description
C	Casing	Hw	114.3 mm
M	Mud	Nw	88.9 mm
W	Water	PVC 150	150 mm

Core Run

Core lifts are identified by a line and depth with core loss per run as a percentage. Core loss is shown in the core run unless otherwise indicated.

Defect Spacing

The average distance between defects is measured parallel to the core axis in mm and may be expressed as a range or average.

Angle / Orientation

Angle from horizontal and orientation to magnetic north.

For inclined cored boreholes the Alpha and Beta angles are presented for orientated core. Alpha (α) is measured relative to the core axis, whilst Beta (β) is measured clockwise from the reference line looking down the core axis in the direction of drilling.

Excavation Method

Term	Definition
N	Natural exposure
X	Existing excavation
BB	Tractor mounted backhoe bucket
EX	Hydraulic excavator
EH	Hydraulic excavator with hammer
B	Bulldozer blade
R	Ripper

Water / Drilling Fluid

The drilling fluid used is identified and loss of return to the surface is estimated as a percentage, generally of each core lift.

Symbol	Description
	Water inflow
	Water outflow
	Water level: during drilling or immediately after completion of drilling
	Groundwater level with date observed prior to introduction of fluids or after standpipe construction
Not observed	The observation of groundwater, whether present or not, was not possible due to drilling water, surface seepage or cave in of the borehole / test pit.
Not encountered	The borehole / test pit was dry soon after excavation, however groundwater could be present in less permeable strata. Inflow may have been observed had the borehole / test pit been left open for a longer period.

Colour

The colour of a soil or rock is described in a moist/wet condition using simple terms, such as black, white, grey, red, brown, orange, yellow green or blue. These are modified as necessary by 'pale', 'dark' or 'mottled'. Borderline colours are described as a combination of these colours (e.g. orange-brown). Where a soil or rock consists of a primary colour with a secondary mottling it is described as (primary colour) mottled (first colour) and (secondary colour). Where colour is described outside of the material description it is for the interval.

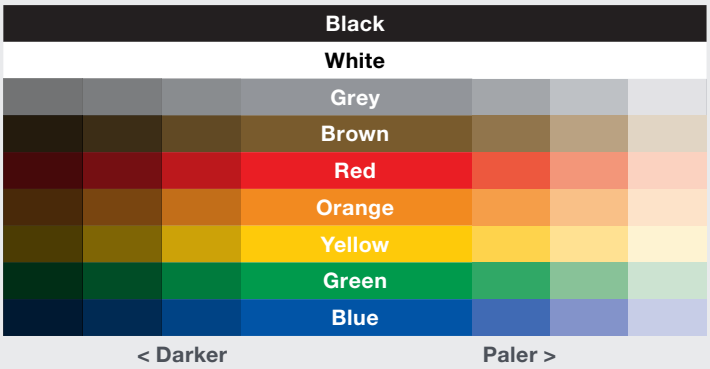

Description of Soil

- **vi.** Soil name (BLOCK LETTERS)
- **vii.** Plasticity or particle size of soil
- **viii.** Colour (i.e. dominant colour of material)
- **ix.** Secondary soil components names & estimated proportions, including their plasticity / particle characteristics, colour
- **x.** Minor soil components name, estimated proportions, including their plasticity / particle characteristics, colour
- **xi.** Other minor soil components
- **xii.** Moisture condition
- **xiii.** Consistency / density
- **xiv.** Structure of soil, geological origin
- **xv.** Additional observations

Particle Size

Term		Grain Size
Clay		< 2 µm
Silt		2 – 75 µm
Sand	Fine	0.075 – 0.21 mm
	Medium	0.21 – 0.6 mm
	Coarse	0.6 – 2.36 mm
Gravel	Fine	2.36 – 6.7 mm
	Medium	6.7 – 19 mm
	Coarse	19 – 63 mm
Cobbles		63 – 200 mm
Boulders		> 200 mm

Fine Grained and Coarse Grained Soils

Term	Description
Fine Grained Soil (cohesive)	More than 35% of the material less than 63 mm is smaller than 0.075 mm (silts and clays)
Coarse Grained Soil	More than 65% of the material less than 63 mm is larger than 0.075 mm (sands, gravels and cobbles)

Descriptive Terms for Secondary and Minor Components

Designation of Components	In coarse grained soils				In fine grained soils	
	% Fines	Terminology	% Accessory coarse fraction	Terminology	% Sand / Gravel	Terminology
Minor	≤5	trace	≤ 15	trace	≤ 15	trace
	> 5, ≤ 12	with	> 15, ≤ 30	with	> 15, ≤ 30	with
Secondary	> 12	prefix	> 30	prefix	> 30	prefix

Plasticity – Fine Grained Soils

Liquid Limit (LL) %	Description
≤ 35	Low plasticity (L)
> 35 to ≤ 50	Medium plasticity (I)
> 50	High plasticity (H)

Plasticity Chart– Fine Grained Soils

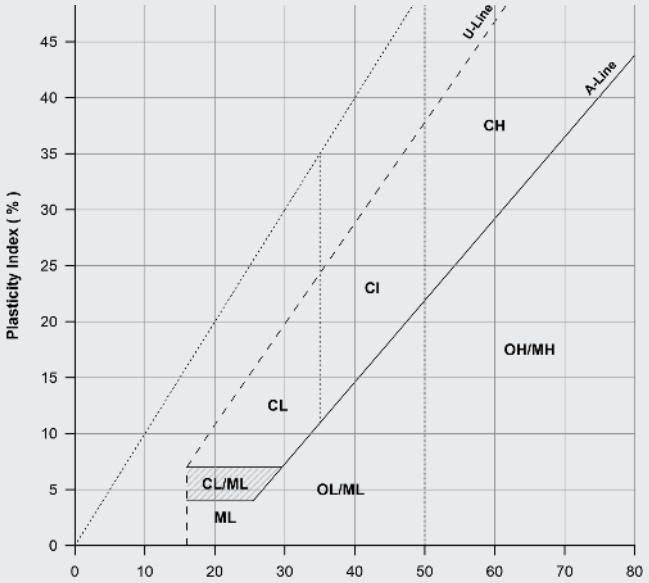

Consistency Terms – Fine Grained Soils

Term	Undrained shear strength (kPa)	Indicative SPT (N) Blow Count	Field Guide to Consistency
Very Soft (VS)	< 12	0 – 2	Easily penetrated several centimetres by fist, exudes between fingers when squeezed in fist
Soft (S)	12 – 25	2 – 4	Easily penetrated several centimetres by thumb, easily moulded by light finger pressure
Firm (F)	25 – 50	4 – 8	Can be penetrated several centimetres by thumb with moderate effort, and moulded between the fingers by strong pressure
Stiff (St)	50 – 100	8 – 15	Readily indented by thumb but penetrated only with difficultly. Cannot be moulded by fingers
Very Stiff (VSt)	100 – 200	15 – 30	Readily indented by thumb nail, still very tough
Hard (H)	> 200	> 30	Indented with difficulty by thumb nail, brittle
Friable (Fr)	-		Can be easily crumbled or broken into small pieces

Density Terms – Coarse Grained Soils

Term	Density Index (%)	SPT (N) Blow Count
Very Loose (VL)	< 15	0 – 4
Loose (L)	15 – 35	4 – 10
Medium Dense (MD)	35 – 65	10 – 30
Dense (D)	65 – 85	30 – 50
Very Dense (VD)	> 85	> 50

Particle Characteristics – Coarse Grained Soils

Term	Description
Well graded	Having good representation of all particle sizes
Poorly graded	With one or more intermediate size poorly represented
Gap graded	With one or more intermediate sizes absent
Uniform	Essentially of one size

Angularity – Coarse Grained Soils

	Rounded
	Sub-rounded
	Angular
	Sub-angular

Origin of Soil

Fill	Formed by anthropogenic activity
Aeolian	Formed by wind
Alluvial	Formed by streams and rivers
Colluvial	Formed on slopes (talus)
Estuarine	Formed in marine environments
Lacustrine	Formed in lakes
Residual	Formed by weathering insitu

Soil Moisture

	Term	Code	Description
Coarse Grained	Dry	D	Looks and feels dry and free running
	Moist	M	Soil feels cool, darkened in colour, soils tend to stick together, soil grains do not run freely through fingers and no visible free water
	Wet	W	Soil feels cool, darkened in colour, soils tend to stick together, free water on remoulding
Fine Grained	Moist, Less than Plastic Limit	W < PL	Hard and friable or powdery, moisture content well below Plastic Limit
	Moist, Near Plastic Limit	W ≈ PL	Soil feels cool, darkened in colour, can be moulded, near Plastic Limit
	Moist, Wet of Plastic Limit	W > PL	Soil feels cool, dark, usually weakened, free water, moisture content well above Plastic Limit
	Wet, Near Liquid Limit	W ≈ LL	Soil exudes easily
	Wet, Wet of Liquid Limit	W > LL	Soil behaves as a liquid

Boundary Classifications

Soils possessing characteristics of two groups are designated by combinations of group symbols. For example, GW-GC, well graded gravel-sand mixture with clay binder.

Graphic Symbols

	Asphalt		MH
	CH		ML
	CI		OH
	CL		OL
	Concrete		PT
	Fill		SC
	GC		SM
	GM		SP
	GP		SW
	GW		Topsoil

Soil Classification

Soils are described in general accordance with AS1726-2017 as shown below.

FIELD IDENTIFICATION PROCEDURES (Excluding particles larger than 63 mm and basing fractions on estimated mass)					GROUP SYMBOL	PRIMARY NAME
COARSE GRAINED SOILS More than 65% of the material is less than 63 mm and is larger than 0.075 mm	A particle size of 0.075 is about the smallest size distinguishable to the naked eye	**GRAVELS** More than half of coarse fraction is larger than 2.36 mm	**CLEAN GRAVELS** (Little or no fines)	Wide range in grain size and substantial amounts of all intermediate particle sizes, not enough fines to bind coarse grains, no dry strength; ≤ 5% fines	GW	GRAVEL
				Predominantly one size or a range of sizes with more intermediate sizes missing, not enough fines to bind coarse grains, no dry strength; ≤ 5% fines	GP	GRAVEL
			GRAVELS w/ FINES (Appreciable amount of fines)	'Dirty' materials with excess of non-plastic fines, none to medium dry strength; ≥ 12% silty fines	GM	SILTY GRAVEL
				'Dirty' materials with excess of plastic fines, medium to high dry strength; ≥ 12% clayey fines	GC	CLAYEY GRAVEL
		SANDS More than half of coarse fraction is smaller than 2.36 mm	**CLEAN SANDS** (Little or no fines)	Wide range in grain size and substantial amounts of all intermediate particle sizes, not enough fines to bind coarse grains, no dry strength; ≤ 5% fines	SW	SAND
				Predominantly one size or a range of sizes with more intermediate sizes missing, not enough fines to bind coarse grains, no dry strength; ≤ 5% fines	SP	SAND
			SANDS w/ FINES (Appreciable amount of fines)	'Dirty' materials with excess of non-plastic fines, none to medium dry strength; ≥ 12% silty fines	SM	SILTY SAND
				'Dirty' materials with excess of plastic fines, medium to high dry strength; ≥ 12% clayey fines	SC	CLAYEY SAND

FINE GRAINED SOILS More than 35% of the material less than 63 mm is less than 0.075 mm	**IDENTIFICATION PROCEDURES ON FRACTIONS** < 0.075 mm					
		DRY STRENGTH	**DILATANCY**	**TOUGHNESS**	**GROUP SYMBOL**	**PRIMARY NAME**
	SILTS AND CLAYS Liquid Limit < 50%	None to low	Slow to rapid	Low	ML	SILT
		Medium to high	≥ 12% clayey fines	Medium	CL, CI*	CLAY
		Low to medium	Slow	Low	OL	ORGANIC SILT
	SILTS AND CLAYS Liquid Limit > 50%	Low to medium	None to slow	Low to medium	MH	SILT
		High to very high	None	High	CH	CLAY
		Medium to high	None to very slow	Low to medium	OH	ORGANIC CLAY

HIGHLY ORGANIC SOILS: readily identified by colour, odour, spongy feel and frequently fibrous texture — PT — PEAT

* CL is low plasticity clay, CI is medium plasticity clay

Description of Rock

i. Rock name (BLOCK LETTERS)
ii. Grain size and mineralogy
iii. Colour (i.e. dominant colour of material)
iv. Fabric and texture
v. Features, inclusions, minor components, moisture content and durability
vi. Strength
vii. Weathering and/or alteration
viii. Rock mass properties – discontinuities and structure of rock
ix. Interpreted stratigraphic unit
x. Additional observations including geological structure

Simple rock names are used to provide a reasonable engineering description, rather than a precise geological classification. The rock name is chosen by considering the nature and shape of the grains or crystals, the texture and fabric of the rock material, the geological structure and setting, and information from the geological map of the area. Further guidance on the naming of rocks can be found in AS1726-2017, Tables 15, 16, 17 and 18. Typical rock types are described below, though subject to site specific variations.

Rock Type	Description	Example of Rock Name
Sedimentary	Formed by deposited beds of sediments, have grains that are cemented together and often rounded. Significant porosity	COMMON: Conglomerate, Breccia, Sandstone, Mudstone, Siltstone, Claystone ≥90% CARBONATE: Limestone, Dolomite, Calcirudite, Calcarenite, Calcisiltite, Calcilutite PYROCLASTIC: Agglomerate, Volcanic Breccia, Tuff
Igneous	Formed from molten rock and have a crystalline texture. Typically massive and low porosity. Rock types are from coarse to fine grained.	HIGH QUARTZ CONTENT: Granite, Microgranite, Rhyolite MODERATE QUARTZ CONTENT: Diorite, Microdiorite, Andesite LOW QUARTZ CONTENT: Gabbro, Dolerite, Basalt
Metamorphic	Formed when rocks are subject to heat and/or pressure and have typically have directional fabric. Typically have low porosity and crystalline structure. Rock types are from coarse to fine grained	FOLIATED: Gneiss, Schist, Phyllite, Slate NON-FOLIATED: Marble, Quartzite, Serpentinite, Hornfels
Duricrust	Formed as part of a weathering profile and show evidence of being cemented in situ. Cementation is typically irregular and exhibits replacement textures.	Ferricrete (Iron oxides and hydroxides) Silicrete (Silica) Calcrete (Calcium carbonate) Gypcrete (Gypsum)

Note: ( ) denotes dominant cementing mineralogy

Grain Size

Terms describing dominate grain size in sedimentary rocks.

Term	Grain size
Coarse	Mainly 0.6 mm to 2.0 mm
Medium	Mainly 0.2 mm to 0.6 mm
Fine	Mainly 0.06 mm (just visible) to 0.2 mm

Terms describing dominate grain size in igneous and metamorphic rocks

Term	Grain size
Coarse	Mainly greater than 2 mm
Medium	0.06 mm to 2 mm
Fine	Mainly less than 0.06 mm (just visible) to 0.2 mm

Texture and Fabric

Sedimentary rocks

Thickness	Bedding Term
< 6 mm	Thinly laminated
6 – 20 mm	Laminated
20 – 60 mm	Very thinly bedded
60 – 200 mm	Thinly bedded
0.2 – 0.6 m	Medium bedding
0.6 – 2 m	Thickly bedded
> 2 m	Very thickly bedded

Igneous rocks

Term	Definition
Amorphous	Indicates that the rock has no obvious crystalline structure
Crystalline	A regular molecular structure, showing crystal structure and symmetry.
Cryptocrystalline	The texture comprises crystals that are too small to recognise under an ordinary microscope. Indistinctly crystalline.
Porphyritic	Indicates the presence of phenocrysts (relatively large crystals in a fine grained ground mass) in igneous rocks.
Flow banded	Indicates visible flow lines in volcanic rocks and some intrusive rocks
Glassy	Entirely glass like. No crystalline units and without crystalline structure.
Vesicular	A texture of volcanic rocks that indicates the presence of vesicles (small gas bubbles). Where the vesicles are filled with a mineral substance they are termed Amygdales and the texture is Amygdaloidal.

Metamorphic

Term	Definition
Foliation	The parallel arrangement of minerals due to metamorphic process, which shall be defined by the terms in weak, moderate and strongly foliated.
Porphyroblastic	A texture indicating the presence of porphyroblasts (larger crystals formed by recrystallization during metamorphism, such as garnet or staurolite in a mica schist).
Cleavage	A type of foliation developed in fine grained metamorphic rocks such as slates.

Bedding and Fabric Development

Type	Definition
Massive	No obvious development of bedding – rock appears homogeneous
Poorly Developed	Bedding is barely obvious as faint mineralogical layering or grain size banding, but bedding planes are poorly defined.
Well Developed	Bedding is apparent in outcrops or drill core as distinct layers or lines marked by mineralogical or grain size layering.
Very Well Developed	Bedding is often marked by a distinct colour banding as well as by mineralogical or grain size layering.
Indistinct Fabric	There is little effect on strength properties
Distinct Fabric	The rock may break more easily parallel to the fabric

Rock Strength

Term (Code)	UCS (MPa)	$Is_{(50)}$ (MPa)	Field Guide to Strength
Very Low (VL)	0.6 - 2	> 0.03 to ≤ 0.1	Material crumbles under firm blows with sharp end of pick; can be peeled with knife; too hard to cut a triaxial sample by hand. Pieces up to 3 cm thick can be broken by finger pressure.
Low (L)	2 - 6	> 0.1 to ≤ 0.3	Easily scored with a knife; indentations 1 mm to 3 mm show in the specimen with firm blow of the pick point; has dull sound under hammer. A piece of core 150 mm long 50 mm in diameter may be broken by hand. Sharp edges of core may be friable and break during handling.
Medium (M)	6 - 20	> 0.3 to ≤ 1.0	Readily scored with a knife; a piece of core 150 mm long by 50 mm in diameter can be broken by hand with difficulty.
High (H)	20 - 60	> 1 to ≤ 3	A piece of core 150 mm long by 50 mm in diameter cannot be broken by hand but can be broken by a pick with a single firm blow; rock rings under hammer.
Very High (VH)	60 - 200	> 3 to ≤ 10	Hand specimen breaks with pick after more than one blow; rock rings under hammer.
Extremely High (EH)	> 200	> 10	Specimen requires many blows with geological pick to break through intact material; rock rings under hammer.

Rock strength is assessed by laboratory Uniaxial Compressive Strength (UCS) testing and/or Point Load Strength Index (PLT) testing to obtain the $Is_{(50)}$ the strength table implies a 20 times correlation between $Is_{(50)}$ and UCS used for classification. Note however, multiplier may range from 4 (e.g. some carbonated and low strength rocks) to 40 (e.g. some igneous rocks and/or some high strength rocks). A site specific correlation based on testing, previous investigation or literature may be used where available. These terms refer to the strength of the rock material and not to the strength of the rock mass which may be considered weaker due to the effect of rock defects.

Visual Log

A diagrammatic plot of defects showing type, spacing and orientation in relation to the core axis.

- Defects open in situ or clay sealed
- Defects closed in-situ
- Drill induced fractures or handling breaks
- Infilled seam

Rock Weathering and or Alteration Classification

Term (Code)		Definition	
Residual soil (RS)		Soil developed on extremely weathered rock. The rock mass structure and substance fabric are no longer evident but the soil has not been significantly transported.	
Extremely weathered (XW) Extremely altered (XA)		Rock is weathered to such an extent that it has 'soil' properties, i.e, it either disintegrates or can be remoulded in water, but the texture of original rock is still evident.	
Highly weathered (HW) Highly Altered (HA)	Distinctly weathered (DW)* Distinctly Altered (DA)	Whole rock material is discoloured usually by extent that iron staining or bleaching and other signs of chemical or physical decomposition are evident. Porosity and strength may be increased or decreased compared to the fresh rock usually as a result of iron leaching or deposition. The colour and strength of the original rock substance is no longer recognisable	*Where is it not practical to distinguish between 'HW' and MW'. Rock strength usually changed by weathering. The rock may be highly discoloured, usually by iron staining. Porosity may be increased by leaching, or may be decreased due to deposition of weathering products in pores
Moderately weathered (MW) Moderately Altered (MA)		Whole rock material is discoloured usually by staining that original colour of the fresh rock is no longer recognisable	
Slightly weathered (SW) Slightly altered (SA)		Rock is slightly discoloured but shows little or no change of strength from fresh rock	
Fresh rock (FR)		Rock shows no sign of decomposition or staining.	

Rock Core Recovery

TCR = Total Core Recovery (%)

$$\frac{\textbf{Length of Core Recovered}}{\textbf{Length of Core run}} \times 100$$

SCR = Solid Core Recovery (%)

$$\frac{\textbf{Sum Length of Cylindrical Core Recovered}}{\textbf{Length of Core run}} \times 100$$

RQD = Rock Quality Designation (%)

$$\frac{\textbf{Sum Length of Sound Core Pieces > 100mm in length}}{\textbf{Length of Core run}} \times 100$$

Types of Defects

Term		Code	Description
Parting		PT	A surface or crack across which the rock has little or no tensile strength. Parallel or sub-parallel to layering (e.g. bedding) or a planar anisotropy in the rock material (i.e. cleavage). May be opened or closed.
Joint		JT	A surface or crack with no apparent shear displacement and across which the rock has little or no tensile strength, but which is not parallel or sub-parallel to layering or to planar anisotropy in the rock material. May be open or closed.
Sheared Surface		SR	A near planar, curved or undulating surface which is usually smooth, polished or slickensided and which shows evidence of shear displacement.
Sheared Zone		SZ	Zone of rock material with roughly parallel, near planar, curved, or undulating boundaries cut by closely spaced joints, sheared surfaces or other defects. Some of the defects are usually curved and intersect to divide the mass into lenticular or wedge-shaped blocks.
Crushed Zone [a]		CZ	A zone of broken and disturbed ground containing more than one identifiable Crushed Seam.
Fracture Zone [a]		FZ	A zone of broken ground with parallel to opposing boundaries dominated by abundant, extremely closely to closely spaced defects, which may be intact or open, and planar, curved, undulating, irregular, or stepped, resulting in a dissected rock mass of angular trapezoidal, triangular or rectangular fragments.
Seam (SE)	Sheared Seam	SS	Seam of soil material with roughly parallel almost planar boundaries, composed of soil materials with roughly parallel near planar, curved or undulating boundaries cut by closely spaced joints, sheared surfaces or other defects. Some of the defects are usually curved and intersect to divide the mass into lenticular or wedge-shaped blocks.
	Crushed Seam	CS	Seam of soil material with roughly parallel almost planar boundaries, composed of disoriented, usually angular fragments of the host rock material which may be more weathered than the host rock. The seam has soil properties.
	Infilled Seam	IS	Seam of soil material usually with distinct roughly parallel boundaries formed by the migration of soil into an open cavity or joint, infilled seams less than 1 mm thick may be described as a veneer or coating on a joint surface.
	Extremely Weathered Seam	XS	Seam of soil material, often with gradational boundaries. Formed by weathering of the rock material in place.
Fault [b]		FT	A fracture (defect) or fracture zone along which there has been an observable amount of displacement.
Vein [c]		VE	Any fracture that contains mineralized material. Veins can display either crack-normal extension or shear displacement coupled with crack-normal extension.
Vugh [a]		VG	An open void with secondary crystallisation which may be coated, partly or nearly completely filled.
Void [a]		VO	An open space created through natural or anthropogenic processes, including, but not limited to, caves, kettles, tunnels, mines, pipes, piping, landslides, faulting, shearing, dissolution, & erosion.
Mechanical Break		MB	A fracture or break induced or created by the sampling process (i.e. drilling (DB) handling (HB), drill lift (DL), excavation, or blasting).

All definitions as per AS1726-2017, except:

[a] SMEC Field Manual,
[b] British Standard BS 5930:2015, and
[c] Glossary of Geology (Fifth Edition - revised) (2011), American Geosciences Institute.

Defect Planarity

Code	Description
CR	Curved – A defect with a gradual change in orientation
IR	Irregular – A defect with many sharp changes in orientation
PL	Planar – Defect forms a continuous plane without variation in orientation
ST	Stepped – A defect with distinct sharp steps or step
UN	Undulose – A defect with undulations

Defect Roughness

Code	Description
RO	Rough – Many small surface irregularities generally related to the grain size of the parent rock
SM	Smooth – Few or no surface irregularities related to the grain size of the parent rock
PO	Polished – Planes have a distinct sheen or a smoothness
SL	Slickensided – Planes have a polished, grooved or striated surface consistent with differential movement of the parent rock along the plane
VR	Very rough – many large surface irregularities, amplitude generally more than 1mm

Type of Structures

Term	Code	Description
Bedding	BD	A layered arrangement of minerals parallel to the surface of deposition which has caused planar anisotropy in the rock substance.
Cleavage	CV	An alignment of fine grained minerals caused by deformation.
Schistosity	SH	A layered arrangement of minerals to each other
Foliation	FO	A planar alignment of minerals caused by deformation.
Void	VO	A completely empty space
Dyke	DK	Sheet-like bodies of igneous rock that cut across sedimentary bedding or foliations in rocks. They may be single or multiple in nature
Sill	SL	A sill is an intrusion of magma that spreads underground between the layers of another kind of rock
Contact	CX	A contact between intrusive and stratigraphic units.
Boundary	BN	A distinct boundary between two stratigraphic units
Vugh	VG	An open void with crystalisation

Note: Drill breaks (DB) and handling breaks (HB) are not included as natural discontinuity.

Discontinuity Spacing

Spacing (mm)	Description
> 6000	Extremely Widely Spaced
2000 - 6000	Very Widely Spaced
600 - 2000	Widely Spaced
200 - 600	Medium Spaced
60 - 200	Closely Spaced
20 - 60	Very Closely Spaced
< 20	Extremely Closely Spaced

Infill Material

Code	Name	Code	Name
Ap	Apatite	Ga	Galena
Ca	Calcite	Gp	Gypsum
Ch	Chlorite	Mn	Manganese
Cl	Clay	MnO	Manganese Oxide
Co	Coal	MS	Secondary mineral
Ep	Epidote	Py	Pyrite
Fe	Limonite/ Ironstone/ Goethite	Um	Unidentified mineral
FeO	Iron oxide	Qz	Quartz
Fs	Feldspar	X	Carbonaceous
		Ze	Zeolite

Discontinuity Observation

Term	Code	Description
Clean	CN	No visible coating or infill
Stain	SN	No visible coating or infill but surfaces are discoloured by mineral staining
Veneer < 1 mm	VN	A visible coating or soil or mineral substance but usually unable to be measured. If discontinuous over the plane, patchy veneer.
Coating > 1 mm to < 10 mm	CT	A visible coating or infilling of soil or mineral substance. Describe composition and thickness.
Filling (Filled) > 10 mm	FD	A visible filling of soil or mineral substance. Describe composition and thickness.

Discontinuity Orientation

Code	Description
VT	Vertical
HO	Horizontal
RL	Top right to bottom left
LR	Top left to bottom right

Samples and Field Tests

Code	Description
B	Bulk disturbed sample
BLK	Block sample
C	Core sample
CBR	CBR Mould Sample
CPT_u	Cone Penetration Test (with pore pressure)
DT	Dilatometer
DS	Small disturbed sample
ES	Soil sample for environmental testing
EW	Water sample for environmental testing
FP	Pressuremeter
G	Gas sample
H	Hydraulic fracturing
HP	Hand penetrometer test
I	Impression device
$Is_{(50)}$	Point Load Index
K	Permeability
LB	Large bulk disturbed sample
N	Standard penetration test result (N* denotes SPT sample recovery)
O	Core orientation
P	Piston sample
PID	Photoionisation detector reading in ppm
PP	Penetrometer
R	Hammer bouncing / refusal
SPT	Standard Penetration Test
U	Undisturbed push in sample
UCS	Uniaxial Compressive Strength
U50	Undisturbed tube sample (50 mm diameter)
U75	Undisturbed tube sample (75 mm diameter)
U100	Undisturbed tube sample (100 mm diameter)
VS	Vane shear test
● (A)	Axial Test
○ (D)	Diametral Test
□	Irregular Lump test

Laboratory Tests

Code	Description
ACM	Asbestos Containing Material
CD	Consolidated Drained
CU	Consolidated Undrained
LL	Liquid Limit
LS	Linear Shrinkage
MC	Moisture Content
MDD	Maximum Dry Density
OMC	Optimum Moisture Content
PBT	Plate Bearing Test
PI	Plasticity Index
PL	Plastic Limit
PSD	Particle Size Distribution
ρ_b	Bulk Density
ρ_p	Particle Density
ρ_d	Dry Density
UU	Undrained Unconsolidated

Backfill / Standpipe Detail

Symbol	Description	Symbol	Description
	Cement seal		Filter pack: sand filter
	Grout backfill GP -Cement BE - Bentonite Cement		Filter pack: gravel filter
	Un-slotted pipe		Bentonite seal
	Slotted pipe		Cutting – excavated material backfill
	Surface Completion: Monument Above Ground		Surface Completion: Gatic Ground Monument

Completion Details

Type	Description
Collapse	Exploratory hole collapsed before reaching planned depth
Equipment Failure	Boring or excavator equipment operational failure
Flooding	Flooding of excavation
Machine Limit	Limit of machine capability reached
Obstruction	Obstruction preventing further advancement
Operator Limit	Limit of operator limit/safety reached
Possible services	Indication of possible services below
Services present	Services encountered during exploratory hole
Squeezing	Hole squeezing boring equipment
Target Depth	Depth reached as planned
Target Depth (Instrumentation Installed)	Depth reached as planned instrumentation installed
Target Depth (Standpipe Installed)	Depth reached as planned open standpipe constructed
Material Refusal	Material preventing further advancement

Status

Code	Description
-2	Historic
-1	For information
0	Preliminary
1	Checked
2	Draft
3	Final

Geological & Engineering Log

Project	Preliminary Geotechnical Investigation	East	307823.6 m	Start Date	02/03/2021	Contractor	Numac
Client	Manildra Group Pty Ltd	North	6183132.5 m	End Date	02/03/2021	Rig Type	Comacchio 205
Site	Port Kembla	Elevation	2.88 m			Mounting	Track
Job Number	30013038	Datum	MGA94 Zone 56/AHD				

Inclination 90°
Azimuth
North
Survey

SMEC

Borehole Identifier: **BH2**

Testing

Method	Casing Support Water (Gain/Loss)	Run (TCR) RQD	Sampling	Strength SPT, DCP, Is(50) (MPa), PP (UCS kPa), SV (kPa)	Permeability, Level & Inflow	Depth (m) Elevation	Graphic Log	Soil Code	Depth RL	Soil / Rock Material Description	Moisture Condition	Consistency Density	Colour	Weathering & Alteration	Rock Strength	Inferred Rock Strength Point Load Is(50) ● - Axial ○ - Diametral (VL -0.1, L -0.3, M -1, H -3, VH -10, EH)	Relative Strength Soil-Rock (0)	Defect Spacing (mm) (2, 20, 200, 2000)	Visual	Fabric, Structure & Defect Description	Group Defects	Origin, Stratigraphic Unit & General Observations	Installation
ADT	Steel Casing - HW (114.3 mm) mm					0.0 / 2.9			0.10 / 2.78	GRAVEL: fine to medium grained, angular, pale grey, grey.												CEMENTED SLAG	BH2
										FILL Gravelly SILT with sand: non plastic, pale grey, pale orange, gravel is fine to coarse grained, angular, sand is fine to coarse grained, trace boulders, trace brick.												FILL	
						0.5 / 2.4			0.70 / 2.18	FILL Clayey SAND trace silt: fine to coarse grained, pale grey, orange, trace boulders.													0.5
						1.0 / 1.9																	1.0
						1.5 / 1.4			1.50 / 1.38	SAND: fine to coarse grained, pale brown, pale orange.	M	L - MD										AEOLIAN	1.5
						2.0 / 0.9		SP															2.0
						2.5 / 0.4																	2.5
						3.0 / -0.1			3.00 / -0.12	SAND with gravel: fine to coarse grained, pale grey, with brown, orange, white, gravel is fine grained, sub-angular to sub-rounded, trace sea shells.												ESTUARINE?	3.0
WB					02/03/21	3.5 / -0.6		SP			W	MD - D											3.5
						4.0																	

Observations and Comments
Blade TC bit refusal at 11.5m

Notes
Classifications compliant with AS1726-2017: Geotechnical Site Investigations unless otherwise noted.
Defect Log Abridged. Additional detail in digital dataset. Lugeon: BS5930:1999
For Inclined Holes: Angles reported in defects are apparent dip from core horizontal unless as α or β.
Refer to explanatory notes for SMEC logs for details of abbreviations or basis of description.

Logged By	TH	Date	02/03/2021
Approved By	SRM	Date	31/03/2021
Status	1	Page	1 of 3

SMEC 2.10.7.2 LIB GLB Log _ SMEC HYBRID BOREHOLE LANDSCAPE 30013038 GINT.GPJ <<DrawingFile>> 01/04/2021 09:29 10.02.00.04 Datgel Tools | Lib: SMEC 2.10.7 2020-08-20 Prj: SMEC 2.10.8 2020-09-10

Geological & Engineering Log

Project	Preliminary Geotechnical Investigation	East	307823.6 m	Start Date	02/03/2021	Contractor	Numac
Client	Manildra Group Pty Ltd	North	6183132.5 m	End Date	02/03/2021	Rig Type	Comacchio 205
Site	Port Kembla	Elevation	2.88 m			Mounting	Track
Job Number	30013038	Datum	MGA94 Zone 56/AHD				

Inclination 90°
Azimuth
North
Survey

SMEC

Borehole Identifier: **BH2**

Method	Casing Support Water (Gain/Loss)	Run (TCR) RQD	Sampling	Testing: Strength SPT, DCP, Is(50) (MPa), PP (UCS kPa), SV (kPa)	Testing: Permeability, Level & Inflow	Depth (m) / Elevation	Graphic Log	Soil Code	Depth RL	Soil / Rock Material Description	Moisture Condition Consistency Density	Colour	Weathering & Alteration	Rock Strength	Inferred Rock Strength (Point Load Is(50) ● - Axial O - Diametral)	Relative Strength Soil-Rock	Defect Spacing (mm)	Visual	Fabric, Structure & Defect Description	Group Defects	Origin, Stratigraphic Unit & General Observations	Installation
WB						4.0 -1.1		SP		SAND with gravel: fine to coarse grained, pale grey, with brown, orange, white, gravel is fine grained, sub-angular to sub-rounded, trace sea shells. *(continued)*	W	MD - D									ESTUARINE?	
						4.5 -1.6																4.5
						5.0 -2.1																5.0
						5.5 -2.6																5.5
						6.0 -3.1																6.0
						6.5 -3.6																6.5
						7.0 -4.1																7.0
						7.5 -4.6																7.5
						8.0																

Inferred Rock Strength scale: VL -0.1, L -0.3, M -1, H -3, VH -10, EH

Relative Strength Soil-Rock: 0

Defect Spacing (mm): 2, 20, 200, 2000

Observations and Comments
Blade TC bit refusal at 11.5m

Notes
Classifications compliant with AS1726-2017: Geotechnical Site Investigations unless otherwise noted.
Defect Log Abridged. Additional detail in digital dataset. Lugeon: BS5930:1999
For Inclined Holes: Angles reported in defects are apparent dip from core horizontal unless as α or β.
Refer to explanatory notes for SMEC logs for details of abbreviations or basis of description.

Logged By	TH	Date	02/03/2021
Approved By	SRM	Date	31/03/2021
Status	1	Page	2 of 3

SMEC 2.10.7.2 LIB GLB Log _ SMEC HYBRID BOREHOLE LANDSCAPE 30013038 GINT.GPJ <<DrawingFile>> 01/04/2021 09:29 10.02.00.04 Datgel Tools | Lib: SMEC 2.10.7 2020-08-20 Prj: SMEC 2.10.8 2020-09-10

Geological & Engineering Log

Project	Preliminary Geotechnical Investigation	East	307823.6 m	Start Date	02/03/2021	Contractor	Numac
Client	Manildra Group Pty Ltd	North	6183132.5 m	End Date	02/03/2021	Rig Type	Comacchio 205
Site	Port Kembla	Elevation	2.88 m			Mounting	Track
Job Number	30013038	Datum	MGA94 Zone 56/AHD				

Inclination 90°
Azimuth
North
Survey

SMEC

Borehole Identifier: **BH2**

Method	Casing Support Water (Gain/Loss)	Run (TCR) RQD	Sampling	Testing: Strength SPT, DCP, Is(50) (MPa), PP (UCS kPa), SV (kPa)	Testing: Permeability, Level & Inflow	Depth (m) / Elevation	Graphic Log	Soil Code	Depth RL	Soil / Rock Material Description	Moisture Condition	Consistency Density	Colour	Weathering & Alteration	Rock Strength	Inferred Rock Strength (Point Load Is(50) ● - Axial O - Diametral)	Relative Strength Soil-Rock	Defect Spacing (mm)	Visual	Fabric, Structure & Defect Description	Group Defects	Origin, Stratigraphic Unit & General Observations	Installation
WB						8.0 / -5.1				SAND with gravel: fine to coarse grained, pale grey, with brown, orange, white, gravel is fine grained, sub-angular to sub-rounded, trace sea shells. *(continued)*	W	MD - D				VL -0.1 L -0.3 M -1 H -3 VH -10 EH	0	2 20 200 2000			ESTUARINE?	
						8.5 / -5.6		SP															8.5
						9.0 / -6.1			9.00 / -6.12	Clayey SAND: fine to coarse grained, pale green, pale grey, trace silt.	W PL											RESIDUAL SOIL	9.0
						9.5 / -6.6		SC															9.5
						10.0 / -7.1																	10.0
						10.5 / -7.6			10.50 / -7.62	Gravelly CLAY with sand: medium plasticity, pale green, mottled pale grey, brown, with white, sand is fine to coarse grained, gravel is fine grained, angular.		H											10.5
						11.0 / -8.1		CI															11.0
									11.25 / -8.37													EXTREMELY LOW TO VERY LOW STRENGTH WEATHERED ROCK AT TERMINATION DEPTH	
						11.5 / -8.6			11.50	Hole Terminated at 11.50 m Refusal													11.5
						12.0																	

Observations and Comments
Blade TC bit refusal at 11.5m

Notes
Classifications compliant with AS1726-2017: Geotechnical Site Investigations unless otherwise noted.
Defect Log Abridged. Additional detail in digital dataset. Lugeon: BS5930:1999
For Inclined Holes: Angles reported in defects are apparent dip from core horizontal unless as α or β.
Refer to explanatory notes for SMEC logs for details of abbreviations or basis of description.

Logged By	TH	Date	02/03/2021
Approved By	SRM	Date	31/03/2021
Status	1	Page	3 of 3

SMEC 2.10.7.2 LIB GLB Log _ SMEC HYBRID BOREHOLE LANDSCAPE 30013038 GINT.GPJ <<DrawingFile>> 01/04/2021 09:29 10.02.00.04 Datgel Tools | Lib: SMEC 2.10.7 2020-08-20 Prj: SMEC 2.10.8 2020-09-10

Geological & Engineering Log

Project	Preliminary Geotechnical Investigation	East	307782.7 m	Start Date	01/03/2021	Contractor	Numac
Client	Manildra Group Pty Ltd	North	6183065.9 m	End Date	01/03/2021	Rig Type	Comacchio 205
Site	Port Kembla	Elevation	2.77 m			Mounting	Track
Job Number	30013038	Datum	MGA94 Zone 56/AHD				

Inclination 90°
Azimuth
North
Survey

SMEC

Borehole Identifier: **BH5**

Method: ADT, WB
Casing Support Water (Gain/Loss): Steel Casing - HW (114.3 mm) mm
Run (TCR) RQD
Sampling
Testing: Strength SPT, DCP, Is(50) (MPa), PP (UCS kPa), SV (kPa); Permeability, Level & Inflow: Not Observed

Depth (m) / Elevation	Soil Code	Depth / RL	Soil / Rock Material Description	Moisture Condition	Consistency Density	Colour	Weathering & Alteration	Rock Strength	Defect Spacing (mm)	Visual	Fabric, Structure & Defect Description	Group Defects	Origin, Stratigraphic Unit & General Observations	Installation
0.0 / 2.8		2.77	FILL Gravelly CLAY with sand: medium plasticity, dark grey, gravel is medium to coarse grained, angular, sand is medium to coarse grained, trace cobbles, trace silt.										FILL	BH5
		0.30 / 2.47	FILL Clayey GRAVEL with sand: medium to coarse grained, poorly graded, angular, dark grey, sand is medium to coarse grained.											
0.5 / 2.3														0.5
1.0 / 1.8														1.0
		1.40 / 1.37	SAND: medium to coarse grained, pale brown.	M	L - MD								AEOLIAN	
1.5 / 1.3														1.5
2.0 / 0.8	SP													2.0
2.5 / 0.3														2.5
2.70m SPT 4, 3, 5 N=8		2.70 / 0.07	SAND: medium to coarse grained, pale grey.										ESTUARINE? 2.70: SPT Recovery: 0.2 m	
3.0 / -0.2														3.0
3.15m	SP													
3.5 / -0.7														3.5
4.0														

Inferred Rock Strength: Point Load Is(50) ● - Axial ○ - Diametral; VL -0.1, L -0.3, M -1, H -3, VH -10, EH
Relative Strength Soil-Rock: 0
Defect Spacing (mm): 2, 20, 200, 2000

Observations and Comments

Difficulty drilling from 11m

Notes

Classifications compliant with AS1726-2017: Geotechnical Site Investigations unless otherwise noted.
Defect Log Abridged. Additional detail in digital dataset. Lugeon: BS5930:1999
For Inclined Holes: Angles reported in defects are apparent dip from core horizontal unless as α or β.
Refer to explanatory notes for SMEC logs for details of abbreviations or basis of description.

Logged By	TH	Date	01/03/2021
Approved By	SRM	Date	31/03/2021
Status	1	Page	1 of 4

SMEC 2.10.7.2 LIB GLB Log _ SMEC HYBRID BOREHOLE LANDSCAPE 30013038 GINT.GPJ <<DrawingFile>> 31/03/2021 17:22 10.02.00.04 Datgel Tools | Lib: SMEC 2.10.7 2020-08-20 Prj: SMEC 2.10.8 2020-09-10

Geological & Engineering Log

Project	Preliminary Geotechnical Investigation	East	307782.7 m	Start Date	01/03/2021	Contractor	Numac
Client	Manildra Group Pty Ltd	North	6183065.9 m	End Date	01/03/2021	Rig Type	Comacchio 205
Site	Port Kembla	Elevation	2.77 m			Mounting	Track
Job Number	30013038	Datum	MGA94 Zone 56/AHD				

Inclination 90°
Azimuth
North
Survey

SMEC

Borehole Identifier: **BH5**

Method	Casing Support Water (Gain/Loss)	Run (TCR) RQD	Sampling	Testing: Strength SPT, DCP, Is(50) (MPa), PP (UCS kPa), SV (kPa)	Permeability, Level & Inflow	Depth (m) / Elevation	Graphic Log	Soil Code	Depth RL	Soil / Rock Material Description	Moisture Condition	Consistency Density	Colour	Weathering & Alteration	Rock Strength	Inferred Rock Strength (Point Load Is(50) ● - Axial ○ - Diametral)	Relative Strength Soil-Rock	Defect Spacing (mm)	Visual	Fabric, Structure & Defect Description	Group Defects	Origin, Stratigraphic Unit & General Observations	Installation
WB					Not Observed	4.0 / -1.2				SAND: medium to coarse grained, pale grey. *(continued)*	M	L - MD				VL -0.1 L -0.3 M -1 H -3 VH -10 EH	0	2 20 200 2000				ESTUARINE?	
			ES	4.20m SPT 12, 15, 17 N=32 4.65m								D										4.20: SPT Recovery: 0.45 m	
						4.5 / -1.7																	4.5
						5.0 / -2.2																	5.0
						5.5 / -2.7																	5.5
				5.70m SPT 10, 14, 18 N=32 6.15m				SP														5.70: SPT Recovery: 0.45 m	
						6.0 / -3.2																	6.0
						6.5 / -3.7																	6.5
						7.0 / -4.2																	7.0
			ES	7.20m SPT 5, 9, 10 N=19 7.65m								MD										7.20: SPT Recovery: 0.45 m	
						7.5 / -4.7																	7.5
						8.0																	

Observations and Comments
Difficulty drilling from 11m

Notes
Classifications compliant with AS1726-2017: Geotechnical Site Investigations unless otherwise noted.
Defect Log Abridged. Additional detail in digital dataset. Lugeon: BS5930:1999
For Inclined Holes: Angles reported in defects are apparent dip from core horizontal unless as α or β.
Refer to explanatory notes for SMEC logs for details of abbreviations or basis of description.

Logged By	TH	Date	01/03/2021
Approved By	SRM	Date	31/03/2021
Status	1	Page	2 of 4

SMEC 2.10.7.2 LIB GLB Log _ SMEC HYBRID BOREHOLE LANDSCAPE 30013038 GINT.GPJ <<DrawingFile>> 31/03/2021 17:22 10.02.00.04 Datgel Tools | Lib: SMEC 2.10.7 2020-08-20 Prj: SMEC 2.10.8 2020-09-10

Geological & Engineering Log

Project	Preliminary Geotechnical Investigation	East	307782.7 m	Start Date	01/03/2021	Contractor	Numac
Client	Manildra Group Pty Ltd	North	6183065.9 m	End Date	01/03/2021	Rig Type	Comacchio 205
Site	Port Kembla	Elevation	2.77 m			Mounting	Track
Job Number	30013038	Datum	MGA94 Zone 56/AHD				

Inclination 90°
Azimuth
North
Survey

SMEC

Borehole Identifier: **BH5**

Method	Casing Support Water (Gain/Loss)	Run (TCR) RQD	Sampling	Testing: Strength SPT, DCP, Is(50) (MPa), PP (UCS kPa), SV (kPa)	Permeability, Level & Inflow	Depth (m) / Elevation	Graphic Log	Soil Code	Depth RL	Soil / Rock Material Description	Moisture Condition Consistency Density	Colour	Weathering & Alteration	Rock Strength	Inferred Rock Strength (Point Load Is(50) ● - Axial ○ - Diametral)	Relative Strength Soil-Rock	Defect Spacing (mm)	Visual	Fabric, Structure & Defect Description	Group Defects	Origin, Stratigraphic Unit & General Observations	Installation
WB					Not Observed	8.0 / -5.2		SP		SAND: medium to coarse grained, pale grey. *(continued)*	M	MD			VL L M H VH EH / -0.1 -0.3 -1 -3 -10	0	2 20 200 2000				ESTUARINE?	
									8.30 / -5.53	Clayey SAND trace gravel: fine to medium grained, grey, mottled pale green, brown, gravel is medium grained, angular, trace silt.											RESIDUAL SOIL	
				8.50m SPT 10, 11, 12 N=23		8.5 / -5.7															8.50: SPT Recovery: 0.45 m	8.5
				8.95m		9.0 / -6.2		SC														9.0
						9.5 / -6.7																9.5
						10.0 / -7.2																10.0
				10.20m SPT 4, 6, 9 N=15					10.20 / -7.43	CLAY with sand trace gravel: medium plasticity, grey, mottled pale green, brown, with white, sand is fine to coarse grained, gravel is fine grained, angular.	W≈PL	St									10.20: SPT Recovery: 0.45 m	
						10.5 / -7.7		CI														10.5
				10.65m 10.65m PP=350kPa																		
				11.00m SPT 12, 22, 26 N=48		11.0 / -8.2		CI	11.00 / -8.23	Gravelly CLAY with sand: medium plasticity, grey, mottled pale green, brown, with white, gravel is fine to medium grained, angular, sand is fine to coarse grained.		H									11.00: SPT Recovery: 0.45 m	11.0
				11.45m																		
NMLC	20 % Loss	R1 1.00m (40%) 32%				11.5 / -8.7			11.50 / -8.73	CORE LOSS 0.60m (11.50-12.10)											11.5	11.5
						12.0																

Observations and Comments
Difficulty drilling from 11m

Notes
Classifications compliant with AS1726-2017: Geotechnical Site Investigations unless otherwise noted.
Defect Log Abridged. Additional detail in digital dataset. Lugeon: BS5930:1999
For Inclined Holes: Angles reported in defects are apparent dip from core horizontal unless as α or β.
Refer to explanatory notes for SMEC logs for details of abbreviations or basis of description.

Logged By	TH	Date	01/03/2021
Approved By	SRM	Date	31/03/2021
Status	1	Page	3 of 4

SMEC 2.10.7.2 LIB GLB Log _ SMEC HYBRID BOREHOLE LANDSCAPE 30013038 GINT.GPJ <<DrawingFile>> 31/03/2021 17:22 10.02.00.04 Datgel Tools | Lib: SMEC 2.10.7 2020-08-20 Prj: SMEC 2.10.8 2020-09-10

Geological & Engineering Log

Project	Preliminary Geotechnical Investigation	East	307782.7 m	Start Date	01/03/2021	Contractor	Numac
Client	Manildra Group Pty Ltd	North	6183065.9 m	End Date	01/03/2021	Rig Type	Comacchio 205
Site	Port Kembla	Elevation	2.77 m			Mounting	Track
Job Number	30013038	Datum	MGA94 Zone 56/AHD				

Inclination 90°
Azimuth
North
Survey

SMEC

Borehole Identifier: **BH5**

Method	Casing Support Water (Gain/Loss)	Run (TCR) RQD	Sampling	Testing: Strength SPT, DCP, Is(50) (MPa), PP (UCS kPa), SV (kPa)	Testing: Permeability, Level & Inflow	Depth (m) / Elevation	Graphic Log	Soil Code	Depth / RL	Soil / Rock Material Description	Moisture Condition Consistency Density	Colour	Weathering & Alteration	Rock Strength	Inferred Rock Strength: Point Load Is(50) (● - Axial, O - Diametral)	Relative Strength Soil-Rock	Defect Spacing (mm)	Visual	Fabric, Structure & Defect Description	Group Defects	Origin, Stratigraphic Unit & General Observations	Installation
NMLC	20 % Loss	R1 1.00m (40%) 32%			Not Observed	12.0 / -9.2			12.10	CORE LOSS 0.60m (11.50-12.10) *(continued)*												
		12.50							-9.33	DAPTO LATITE: fine to medium grained, pale green, speckled dark grey, orange, red.			XW / HW	SS - VL / VL - L	VL -0.1 / L -0.3 / M -1 / H -3 / VH -10 / EH	0 / 2 / 20 / 200 / 2000			12.10-12.18: Weathered Zone, Cl Infilled, XW.		IGNEOUS - INTRUSIVE 12.23: Is(50) = 0 MPa 12.26: Is(50) = 0.02 MPa 12.39: Is(50 = 0.13 MPa 12.43: Is(50) = 0.09 MPa	
						12.5 / -9.7			12.50 / -9.73	Hole Terminated at 12.50 m Target depth												12.5
						13.0 / -10.2																13.0
						13.5 / -10.7																13.5
						14.0 / -11.2																14.0
						14.5 / -11.7																14.5
						15.0 / -12.2																15.0
						15.5 / -12.7																15.5
						16.0																

Observations and Comments
Difficulty drilling from 11m

Notes
Classifications compliant with AS1726-2017: Geotechnical Site Investigations unless otherwise noted.
Defect Log Abridged. Additional detail in digital dataset. Lugeon: BS5930:1999
For Inclined Holes: Angles reported in defects are apparent dip from core horizontal unless as α or β.
Refer to explanatory notes for SMEC logs for details of abbreviations or basis of description.

Logged By	TH	Date	01/03/2021
Approved By	SRM	Date	31/03/2021
Status	1	Page	4 of 4

SMEC 2.10.7.2 LIB GLB Log _ SMEC HYBRID BOREHOLE LANDSCAPE 30013038 GINT.GPJ <<DrawingFile>> 31/03/2021 17:22 10.02.00.04 Datgel Tools | Lib: SMEC 2.10.7 2020-08-20 Prj: SMEC 2.10.8 2020-09-10

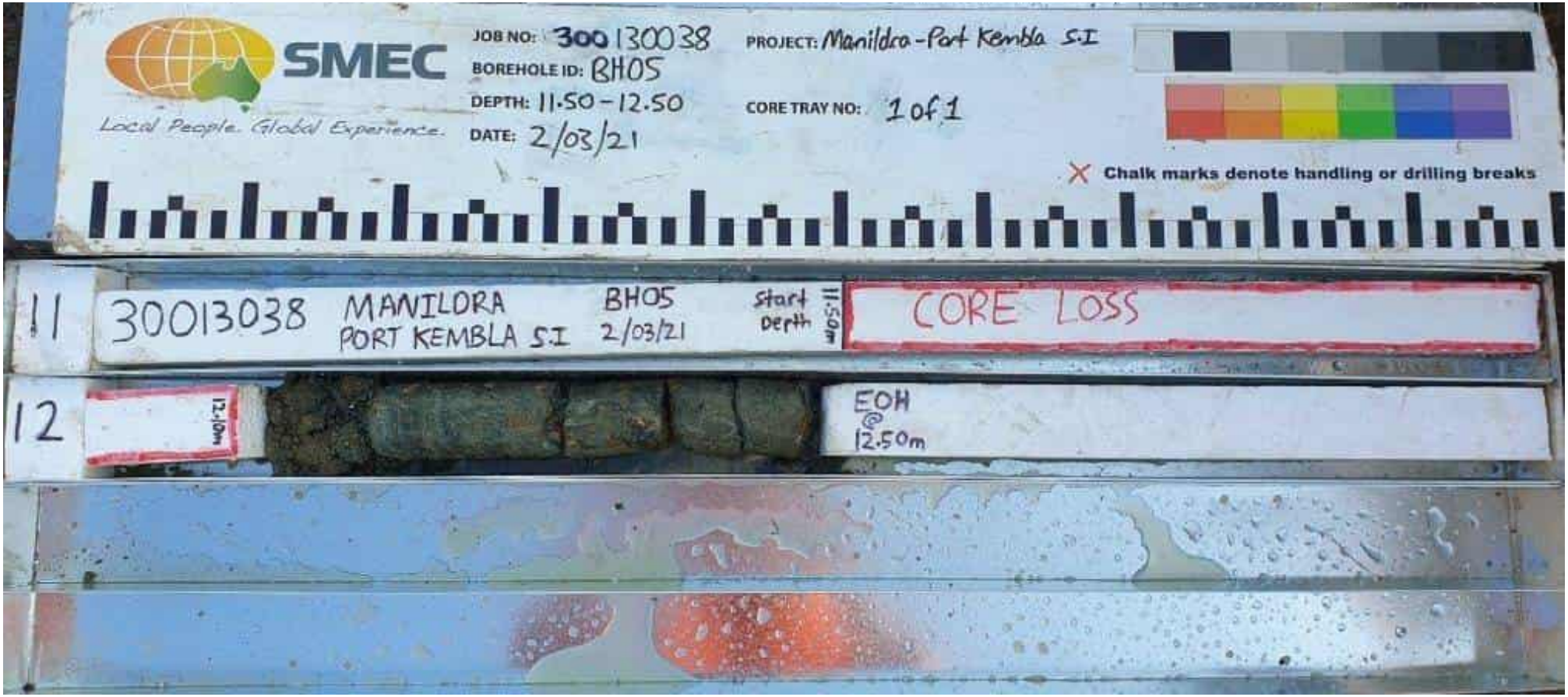

PointID : BH5 Depth Range: 11.50 - 12.50 m - 89277e28-d396-448a-b109-e6f0bb1b6f9d

SMEC	TITLE Manildra Group Pty Ltd Port Kembla Preliminary Geotechnical Investigation & Contamination Assessment Core Photo - BH5	DRAWN TZ	DATE 08/03/2021
		CHECKED	DATE 08/03/2021
		SCALE Not To Scale	A4
		PROJECT No 30013038	FIGURE No 1/1

Geological & Engineering Log

Project	Preliminary Geotechnical Investigation	East	307770.1 m	Start Date	02/03/2021	Contractor	Numac
Client	Manildra Group Pty Ltd	North	6183062.2 m	End Date	02/03/2021	Rig Type	Comacchio 205
Site	Port Kembla	Elevation	2.49 m			Mounting	Track
Job Number	30013038	Datum	MGA94 Zone 56/AHD				

Inclination 90°
Azimuth
North
Survey

SMEC

Borehole Identifier: **BH7**

Testing

Depth (m)	Elevation	Depth RL	Soil / Rock Material Description	Moisture Condition	Consistency Density	Soil Code	Sampling	Strength SPT, DCP, Is(50) (MPa), PP (UCS kPa), SV (kPa)	Origin, Stratigraphic Unit & General Observations
0.0	2.5	2.49	FILL Bouldery SAND with gravel: fine to coarse grained, poorly graded, dark grey, boulders are up to 0.8m in diameter, gravel is fine to coarse grained, angular to sub-angular.						FILL
0.5	2.0								
1.0	1.5								
		1.20 / 1.29	SAND: fine to coarse grained, pale brown, with black carbonaceous laminations.	M	L - MD	SP			AEOLIAN
1.5	1.0								
2.0	0.5								
				W					
2.5	0.0	2.55 / -0.06	SAND: fine to coarse grained, pale grey.						ESTUARINE?
3.0	-0.5				MD	SP	ES	3.00m SPT 10, 13, 14 N=27 3.45m	3.00: SPT Recovery: 0.45 m
3.5	-1.0								
4.0									

Method: WB
Casing Support Water (Gain/Loss): Steel Casing - HW (114.3 mm) mm
Run (TCR) RQD
Permeability, Level & Inflow: 02/03/21
Graphic Log
Inferred Rock Strength — Point Load Is(50) ● - Axial O - Diametral: VL -0.1, L -0.3, M -1, H -3, VH -10, EH
Relative Strength Soil-Rock: 0
Defect Spacing (mm): 2, 20, 200, 2000
Visual
Weathering & Alteration
Rock Strength
Colour
Fabric, Structure & Defect Description
Group Defects
Installation: BH7

Observations and Comments

Notes
Classifications compliant with AS1726-2017: Geotechnical Site Investigations unless otherwise noted.
Defect Log Abridged. Additional detail in digital dataset. Lugeon: BS5930:1999
For Inclined Holes: Angles reported in defects are apparent dip from core horizontal unless as α or β.
Refer to explanatory notes for SMEC logs for details of abbreviations or basis of description.

Logged By	TH	Date	02/03/2021
Approved By	SRM	Date	31/03/2021
Status	1	Page	1 of 4

SMEC 2.10.7.2 LIB GLB Log _ SMEC HYBRID BOREHOLE LANDSCAPE 30013038 GINT.GPJ <<DrawingFile>> 31/03/2021 17:22 10.02.00.04 Datgel Tools | Lib: SMEC 2.10.7 2020-08-20 Prj: SMEC 2.10.8 2020-09-10

Geological & Engineering Log

Project	Preliminary Geotechnical Investigation	East	307770.1 m	Start Date	02/03/2021	Contractor	Numac
Client	Manildra Group Pty Ltd	North	6183062.2 m	End Date	02/03/2021	Rig Type	Comacchio 205
Site	Port Kembla	Elevation	2.49 m			Mounting	Track
Job Number	30013038	Datum	MGA94 Zone 56/AHD				

Inclination 90°
Azimuth
North
Survey

SMEC

Borehole Identifier: **BH7**

Method	Casing Support Water (Gain/Loss)	Run (TCR) RQD	Sampling	Testing: Strength SPT, DCP, Is(50) (MPa), PP (UCS kPa), SV (kPa)	Testing: Permeability, Level & Inflow	Depth (m) / Elevation	Graphic Log	Soil Code	Depth RL	Soil / Rock Material Description	Moisture Condition	Consistency Density	Colour	Weathering & Alteration	Rock Strength	Inferred Rock Strength (Point Load Is(50) ● - Axial O - Diametral)	Relative Strength Soil-Rock	Defect Spacing (mm)	Visual	Fabric, Structure & Defect Description	Group Defects	Origin, Stratigraphic Unit & General Observations	Installation
						4.0 / -1.5				SAND: fine to coarse grained, pale grey. *(continued)*		MD				VL L M H VH EH / -0.1 -0.3 -1 -3 -10	0	2 20 200 2000				ESTUARINE?	
				4.50m SPT 12, 15, 17 N=32		4.5 / -2.0						D										4.50: SPT Recovery: 0.45 m	4.5
			ES	4.95m		5.0 / -2.5																	5.0
						5.5 / -3.0																	5.5
WB				6.00m SPT 12, 15, 20 N=35		6.0 / -3.5		SP														6.00: SPT Recovery: 0.45 m	6.0
			ES	6.45m		6.5 / -4.0																	6.5
						7.0 / -4.5																	7.0
						7.5 / -5.0																	7.5
						8.0																	

Observations and Comments

Notes
Classifications compliant with AS1726-2017: Geotechnical Site Investigations unless otherwise noted.
Defect Log Abridged. Additional detail in digital dataset. Lugeon: BS5930:1999
For Inclined Holes: Angles reported in defects are apparent dip from core horizontal unless as α or β.
Refer to explanatory notes for SMEC logs for details of abbreviations or basis of description.

Logged By	TH	Date	02/03/2021
Approved By	SRM	Date	31/03/2021
Status	1	Page	2 of 4

SMEC 2.10.7.2 LIB GLB Log _ SMEC HYBRID BOREHOLE LANDSCAPE 30013038 GINT.GPJ <<DrawingFile>> 31/03/2021 17:22 10.02.00.04 Datgel Tools | Lib: SMEC 2.10.7 2020-08-20 Prj: SMEC 2.10.8 2020-09-10

Geological & Engineering Log

Project	Preliminary Geotechnical Investigation	East	307770.1 m	Start Date	02/03/2021	Contractor	Numac
Client	Manildra Group Pty Ltd	North	6183062.2 m	End Date	02/03/2021	Rig Type	Comacchio 205
Site	Port Kembla	Elevation	2.49 m			Mounting	Track
Job Number	30013038	Datum	MGA94 Zone 56/AHD				

Inclination 90°
Azimuth
North
Survey

SMEC

Borehole Identifier: **BH7**

Method	Casing Support Water (Gain/Loss)	Run (TCR) RQD	Sampling	Testing: Strength SPT, DCP, Is(50) (MPa), PP (UCS kPa), SV (kPa)	Testing: Permeability, Level & Inflow	Depth (m) / Elevation	Graphic Log	Soil Code	Depth / RL	Soil / Rock Material Description	Moisture Condition	Consistency Density	Colour	Weathering & Alteration	Rock Strength	Inferred Rock Strength Point Load Is(50) ● - Axial ○ - Diametral (VL -0.1, L -0.3, M -1, H -3, VH -10, EH)	Relative Strength Soil-Rock	Defect Spacing (mm) (0, 2, 20, 200, 2000)	Visual	Fabric, Structure & Defect Description	Group Defects	Origin, Stratigraphic Unit & General Observations	Installation
						8.0 / -5.5		SP		SAND: fine to coarse grained, pale grey. *(continued)*		D									ESTUARINE?	
						8.5 / -6.0			8.50 / -6.01	Sandy CLAY with gravel: medium plasticity, grey, mottled pale green, brown, with white, sand is fine to coarse grained, gravel is fine grained, angular.		VSt									RESIDUAL SOIL	8.5
				9.00m SPT 5, 8, 14 N=22		9.0 / -6.5															9.00: SPT Recovery: 0.45 m	9.0
				9.45m 9.45m PP=450kPa		9.5 / -7.0																9.5
WB						10.0 / -7.5		CI														10.0
						10.5 / -8.0																10.5
						11.0 / -8.5																11.0
				11.20m SPT 4, 6, 27 N=33																	11.20: SPT Recovery: 0.45 m	
						11.5 / -9.0		CI	11.50 / -9.01	Gravelly CLAY with sand: medium plasticity, grey, mottled pale green, brown, with white, gravel is fine to medium grained, angular, sand is fine to coarse grained.		H										11.5
NMLC	25 % Loss			11.65m					11.70 / -9.21	CORE LOSS 0.37m (11.70-12.07)												
						12.0																

Observations and Comments

Notes
Classifications compliant with AS1726-2017: Geotechnical Site Investigations unless otherwise noted.
Defect Log Abridged. Additional detail in digital dataset. Lugeon: BS5930:1999
For Inclined Holes: Angles reported in defects are apparent dip from core horizontal unless as α or β.
Refer to explanatory notes for SMEC logs for details of abbreviations or basis of description.

Logged By	TH	Date	02/03/2021
Approved By	SRM	Date	31/03/2021
Status	1	Page	3 of 4

SMEC 2.10.7.2 LIB GLB Log SMEC HYBRID BOREHOLE LANDSCAPE 30013038 GINT.GPJ <<DrawingFile>> 31/03/2021 17:22 10.02.00.04 Datgel Tools | Lib: SMEC 2.10.7 2020-08-20 Prj: SMEC 2.10.8 2020-09-10

Geological & Engineering Log

Project	Preliminary Geotechnical Investigation	East	307770.1 m	Start Date	02/03/2021	Contractor	Numac
Client	Manildra Group Pty Ltd	North	6183062.2 m	End Date	02/03/2021	Rig Type	Comacchio 205
Site	Port Kembla	Elevation	2.49 m			Mounting	Track
Job Number	30013038	Datum	MGA94 Zone 56/AHD				

Inclination 90°
Azimuth
North
Survey

SMEC

Borehole Identifier: **BH7**

Method: NMLC

Casing Support Water (Gain/Loss): 25 % Loss; 25 % Loss

Run (TCR) RQD: R1 0.80m (54%) 0%; R2 0.84m (40%) 0%

Sampling

Testing: Strength SPT, DCP, Is(50) (MPa), PP (UCS kPa), SV (kPa); Permeability, Level & Inflow

Depth (m) / Elevation

Graphic Log

Soil Code

Depth / RL

Soil / Rock Material Description

Moisture Condition

Consistency Density

Colour

Weathering & Alteration

Rock Strength

Inferred Rock Strength — Point Load Is(50) ● - Axial ○ - Diametral (VL -0.1, L -0.3, M -1, H -3, VH -10, EH)

Relative Strength Soil-Rock

Defect Spacing (mm) (0, 2, 20, 200, 2000)

Visual

Fabric, Structure & Defect Description

Group Defects

Origin, Stratigraphic Unit & General Observations

Installation

Depth (m) / Elevation	Depth / RL	Soil / Rock Material Description	Consistency Density	Weathering & Alteration	Rock Strength	Soil Code	Fabric, Structure & Defect Description	Origin, Stratigraphic Unit & General Observations
12.0 / -9.5	12.07							
	-9.58	Gravelly CLAY with sand: medium plasticity, grey, mottled pale green, brown, with white, gravel is fine to medium grained, angular, sand is fine to coarse grained.	H			Cl	12.07-12.50: Weathered Zone, Cl Infilled	RESIDUAL SOIL
12.50	12.50							
12.5 / -10.0	-10.01	CORE LOSS 0.50m (12.50-13.00)						
	13.00							
13.0 / -10.5	13.08		H			Cl	13.00-13.08: Weathered Zone, XW.	EXTREMELY WEATHERED MATERIAL 13.00: Is(50) = 0.01 MPa
	-10.59	Gravelly CLAY with sand: medium plasticity, grey, mottled pale green, brown, with white, gravel is fine to medium grained, angular, sand is fine to coarse grained.		DW	VL		13.15-13.17: Softened Zone, DW.	
13.34	13.34	DAPTO LATITE: fine to medium grained, pale green with pink, speckled dark grey, orange, red, white.					13.24-13.29: Softened Zone, DW.	IGNEOUS - INTRUSIVE 13.19: Is(50) = 0.01 MPa
	-10.85	Hole Terminated at 13.34 m Termination due to cave-in						
13.5 / -11.0								
14.0 / -11.5								
14.5 / -12.0								
15.0 / -12.5								
15.5 / -13.0								
16.0								

Installation: 12.5, 13.0, 13.3, 13.5, 14.0, 14.5, 15.0, 15.5

Observations and Comments

Notes: Classifications compliant with AS1726-2017: Geotechnical Site Investigations unless otherwise noted. Defect Log Abridged. Additional detail in digital dataset. Lugeon: BS5930:1999
For Inclined Holes: Angles reported in defects are apparent dip from core horizontal unless as α or β.
Refer to explanatory notes for SMEC logs for details of abbreviations or basis of description.

Logged By	TH	Date	02/03/2021
Approved By	SRM	Date	31/03/2021
Status	1	Page	4 of 4

SMEC 2.10.7.2 LIB GLB Log _ SMEC HYBRID BOREHOLE LANDSCAPE 30013038 GINT.GPJ <<DrawingFile>> 31/03/2021 17:22 10.02.00.04 Datgel Tools | Lib: SMEC 2.10.7 2020-08-20 Prj: SMEC 2.10.8 2020-09-10

SMEC 2.10.7.5 LIB_30013038.GLB GrfcTbl DG PHOTO CORE PHOTO 1 PER PAGE A4L 30013038 GINT.GPJ <<DrawingFile>> 08/03/2021 13:02 10.02.00.04 Datgel Tools | Lib: SMEC 2.10.7 2020-08-20 Prj: SMEC 2.10.8 2020-09-10

PointID : BH7 Depth Range: 11.70 - 13.34 m - 84780416-7c43-46e2-952b-9213f560e361

SMEC	TITLE Manildra Group Pty Ltd Port Kembla Preliminary Geotechnical Investigation & Contamination Assessment Core Photo - BH7	DRAWN TZ	DATE 08/03/2021
		CHECKED	DATE 08/03/2021
		SCALE Not To Scale	A4
		PROJECT No 30013038	FIGURE No 1/1

Geological & Engineering Log

Project	Preliminary Geotechnical Investigation	East	307798.2 m	Start Date	17/02/2021	Contractor	Ledacon
Client	Manildra Group Pty Ltd	North	6183140.5 m	End Date	17/02/2021	Equipment Type	Hitachi 13t
Site	Port Kembla	Elevation	3.11 m			Mounting	Track
Job Number	30013038	Datum	MGA94 Zone 56/AHD				

Inclination 90°
Azimuth
North
Survey

SMEC

Pit Identifier: **TP01**

Testing

Depth (m) / Elevation	Depth RL	Soil / Rock Material Description	Moisture Condition	Consistency Density	Sampling	Soil Code	Origin, Stratigraphic Unit & General Observations
0.0 / 3.1	0.10	GRAVEL: fine to medium grained, poorly graded, angular, grey, pale grey.					CEMENTED SLAG
	3.01	FILL Gravelly SAND with cobbles: fine to coarse grained, dark grey, dark brown, gravel is fine to coarse grained, angular, iron slag, trace silt and iron material.			ES		FILL
0.5 / 2.6					ES		
1.0 / 2.1	1.00						
	2.11	FILL SAND with gravel trace cobbles: fine to coarse grained, brown, gravel is fine to coarse grained, angular, iron slag, trace iron material.					
1.5 / 1.6	1.70						
	1.41	SAND: fine to coarse grained, pale orange, pale brown.	M	L - MD			AEOLIAN
2.0 / 1.1					ES	SP	
2.5 / 0.6					ES		
3.0 / 0.1	3.00	Hole Terminated at 3.00 m Termination due to cave-in					
3.5 / -0.4							
4.0							

Method: EX
Casing Support: No casing used
Water (Gain/Loss)
Run (TCR) RQD
Permeability, Level & Inflow: Not Observed
Strength SPT, DCP, Is(50) (MPa), PP (UCS kPa), SV (kPa)
Graphic Log
Weathering & Alteration
Rock Strength
Inferred Rock Strength — Point Load Is(50) ● - Axial O - Diametral: VL -0.1, L -0.3, M -1, H -3, VH -10, EH
Relative Strength Soil-Rock
Defect Spacing (mm): 0, 2, 20, 200, 2000
Visual
Fabric, Structure & Defect Description
Group Defects
Installation: TP01

Observations and Comments

Notes
Classifications compliant with AS1726-2017: Geotechnical Site Investigations unless otherwise noted.
Defect Log Abridged. Additional detail in digital dataset. Lugeon: BS5930:1999
For Inclined Holes: Angles reported in defects are apparent dip from core horizontal unless as α or β.
Refer to explanatory notes for SMEC logs for details of abbreviations or basis of description.

Logged By	TH	Date	17/02/2021
Approved By	SRM	Date	31/03/2021
Status	1	Page	1 of 1

SMEC 2.10.7.2 LIB GLB Log _ SMEC HYBRID BOREHOLE LANDSCAPE 30013038 GINT.GPJ <<DrawingFile>> 31/03/2021 17:32 10.02.00.04 Datgel Tools | Lib: SMEC 2.10.7 2020-08-20 Prj: SMEC 2.10.8 2020-09-10

Geological & Engineering Log

Project	Preliminary Geotechnical Investigation	East	307822.2 m	Start Date	15/02/2021	Contractor	Ledacon
Client	Manildra Group Pty Ltd	North	6183132.8 m	End Date	15/02/2021	Equipment Type	Hitachi 13t
Site	Port Kembla	Elevation	2.92 m			Mounting	Track
Job Number	30013038	Datum	MGA94 Zone 56/AHD				

Inclination 90°
Azimuth
North
Survey

SMEC

Pit Identifier: **TP02**

Depth (m) / Elevation	Depth / RL	Soil / Rock Material Description	Moisture Condition	Consistency Density	Soil Code	Sampling	Origin, Stratigraphic Unit & General Observations
0.0 / 2.9	0.10 / 2.82	GRAVEL: fine to medium grained, angular, pale grey, grey.				ES	CEMENTED SLAG
		FILL Gravelly SILT with sand: pale grey, pale orange, gravel is fine to coarse grained, angular, sand is fine to coarse grained, trace boulders, brick.				ES	FILL
0.5 / 2.4	0.70 / 2.22	FILL Clayey SAND trace silt: fine to coarse grained, pale grey, orange, trace boulders.				ES	
1.0 / 1.9							
1.5 / 1.4	1.50 / 1.42	SAND: fine to coarse grained, pale brown, pale orange.	M	L - MD	SP	ES	AEOLIAN
2.0 / 0.9							
2.5 / 0.4	2.95 / -0.03	SAND: fine to coarse grained, pale brown, pale orange.			SP	ES	ESTUARINE?
3.0 / -0.1	3.40						
3.5 / -0.6		Hole Terminated at 3.40 m Target depth					
4.0							

Method: EX
Casing Support: No casing used
Water (Gain/Loss)
Run (TCR) RQD
Permeability, Level & Inflow: Not Observed
Graphic Log
Weathering & Alteration
Rock Strength
Inferred Rock Strength — Point Load Is(50) ● - Axial O - Diametral (VL -0.1, L -0.3, M -1, H -3, VH -10, EH)
Relative Strength Soil-Rock (0)
Defect Spacing (mm) (2, 20, 200, 2000)
Visual
Fabric, Structure & Defect Description
Group Defects
Installation: TP02 (0.5, 1.0, 1.5, 2.0, 2.5, 3.0, 3.4, 3.5)

Testing: Strength SPT, DCP, Is(50) (MPa), PP (UCS kPa), SV (kPa)

Colour

Observations and Comments

Notes: Classifications compliant with AS1726-2017: Geotechnical Site Investigations unless otherwise noted.
Defect Log Abridged. Additional detail in digital dataset. Lugeon: BS5930:1999
For Inclined Holes: Angles reported in defects are apparent dip from core horizontal unless as α or β.
Refer to explanatory notes for SMEC logs for details of abbreviations or basis of description.

Logged By	TH	Date	15/02/2021
Approved By	SRM	Date	31/03/2021
Status	1	Page	1 of 1

SMEC 2.10.7.2 LIB GLB Log _ SMEC HYBRID BOREHOLE LANDSCAPE 30013038 GINT.GPJ <<DrawingFile>> 31/03/2021 17:32 10.02.00.04 Datgel Tools | Lib: SMEC 2.10.7 2020-08-20 Prj: SMEC 2.10.8 2020-09-10

Geological & Engineering Log

Project	Preliminary Geotechnical Investigation	East	307817.4 m	Start Date	15/02/2021	Contractor	Ledacon
Client	Manildra Group Pty Ltd	North	6183107.7 m	End Date	15/02/2021	Equipment Type	Hitachi 13t
Site	Port Kembla	Elevation	3.33 m			Mounting	Track
Job Number	30013038	Datum	MGA94 Zone 56/AHD				

Inclination 90°
Azimuth
North
Survey

SMEC

Pit Identifier: **TP03**

Method: EX
Casing Support: No casing used
Water (Gain/Loss)
Run (TCR) RQD
Sampling: ES B, ES, ES, ES, ES, ES
Testing: Strength SPT, DCP, Is(50) (MPa), PP (UCS kPa), SV (kPa)
Permeability, Level & Inflow: 15/02/21

Depth (m) / Elevation	Depth RL	Soil / Rock Material Description	Moisture Condition	Consistency Density	Soil Code
0.0 / 3.3	3.33	GRAVEL: medium to coarse grained, angular, pale grey, grey.			
	0.15 / 3.18	FILL Sandy CLAY with gravel: medium plasticity, dark grey, brown, sand is medium to coarse grained, gravel is fine to coarse grained, angular, with cobbles.			
0.5 / 2.8					
1.0 / 2.3					
1.5 / 1.8					
2.0 / 1.3	2.00 / 1.33	SAND: fine to coarse grained, pale brown, pale orange, with laminations of dark grey clay, trace sea shells.	M	L - MD	SP
2.5 / 0.8					
3.0 / 0.3					
	3.30 / 0.03	Sand: fine to coarse grained, pale brown, pale orange, with laminations of dark grey clay, trace sea shells.	W		SP
3.5 / -0.2					
	3.70	Hole Terminated at 3.70 m Target depth			
4.0					

Graphic Log
Colour
Weathering & Alteration
Rock Strength
Inferred Rock Strength — Point Load Is(50) ● - Axial O - Diametral — VL -0.1, L -0.3, M -1, H -3, VH -10, EH
Relative Strength Soil-Rock
Defect Spacing (mm): 0, 2, 20, 200, 2000
Visual
Fabric, Structure & Defect Description
Group Defects

Origin, Stratigraphic Unit & General Observations: CEMENTED SLAG; FILL; AEOLIAN; ESTUARINE?

Installation: TP03

Observations and Comments

Notes
Classifications compliant with AS1726-2017: Geotechnical Site Investigations unless otherwise noted.
Defect Log Abridged. Additional detail in digital dataset. Lugeon: BS5930:1999
For Inclined Holes: Angles reported in defects are apparent dip from core horizontal unless as α or β.
Refer to explanatory notes for SMEC logs for details of abbreviations or basis of description.

Logged By	TH	Date	15/02/2021
Approved By	SRM	Date	31/03/2021
Status	1	Page	1 of 1

SMEC 2.10.7.2 LIB GLB Log _ SMEC HYBRID BOREHOLE LANDSCAPE 30013038 GINT.GPJ <<DrawingFile>> 31/03/2021 17:32 10.02.00.04 Datgel Tools | Lib: SMEC 2.10.7 2020-08-20 Prj: SMEC 2.10.8 2020-09-10

Geological & Engineering Log

Project	Preliminary Geotechnical Investigation	East	307788.0 m	Start Date	15/02/2021	Contractor	Ledacon
Client	Manildra Group Pty Ltd	North	6183028.5 m	End Date	15/02/2021	Equipment Type	Hitachi 13t
Site	Port Kembla	Elevation	2.44 m			Mounting	Track
Job Number	30013038	Datum	MGA94 Zone 56/AHD				

Inclination 90°
Azimuth
North
Survey

SMEC

Pit Identifier: **TP04**

Depth (m) / Elevation	Depth RL	Soil / Rock Material Description	Moisture Condition	Consistency Density	Origin, Stratigraphic Unit & General Observations
0.0 / 2.4	2.44	FILL Clayey GRAVEL trace silt: medium to coarse grained, angular, pale grey, grey.			FILL 0.00: -0.2m Bonded Fibro - potential ACM fragment observed
	0.20				
	2.24	FILL Gravelly CLAY with sand: medium plasticity, dark grey, brown, red, black, gravel is fine to coarse grained, angular, sand is medium to coarse grained, trace boulders and bricks.			0.60: -0.8m Bonded Fibro - potential ACM fragment observed
0.5 / 1.9					
1.0 / 1.4					
	1.20				
	1.24	SAND: fine to coarse grained, pale brown.	M	L - MD	AEOLIAN
1.5 / 0.9					
2.0 / 0.4			W		
	2.50				
2.5 / -0.1		Hole Terminated at 2.50 m Termination due to cave-in			
3.0 / -0.6					
3.5 / -1.1					
4.0					

Method: EX
Casing Support: No casing used
Water (Gain/Loss): 15/02/21
Sampling: ES
Strength SPT, DCP, Is(50) (MPa), PP (UCS kPa), SV (kPa): 2, 16
Soil Code: SP
Colour
Weathering & Alteration
Rock Strength
Inferred Rock Strength — Point Load Is(50) ● - Axial O - Diametral: VL -0.1, L -0.3, M -1, H -3, VH -10, EH
Relative Strength Soil-Rock: 0
Defect Spacing (mm): 2, 20, 200, 2000
Visual
Fabric, Structure & Defect Description
Group Defects
Installation: TP04

Testing

Observations and Comments

Hammer used to excavate top 0.2m (some ACM material observed at surface and in top 0.5m)

Penetrometer Notes
Type: DCP9
Blows per 100 mm

Notes

Classifications compliant with AS1726-2017: Geotechnical Site Investigations unless otherwise noted.
Defect Log Abridged. Additional detail in digital dataset. Lugeon: BS5930:1999
For Inclined Holes: Angles reported in defects are apparent dip from core horizontal unless as α or β.
Refer to explanatory notes for SMEC logs for details of abbreviations or basis of description.

Logged By	TH	Date	15/02/2021
Approved By	SRM	Date	31/03/2021
Status	1	Page	1 of 1

SMEC 2.10.7.2 LIB GLB Log _ SMEC HYBRID BOREHOLE LANDSCAPE 30013038 GINT.GPJ <<DrawingFile>> 31/03/2021 17:32 10.02.00.04 Datgel Tools | Lib: SMEC 2.10.7 2020-08-20 Prj: SMEC 2.10.8 2020-09-10

Geological & Engineering Log

Project	Preliminary Geotechnical Investigation	East	307783.2 m	Start Date	15/02/2021	Contractor	Ledacon
Client	Manildra Group Pty Ltd	North	6183065.7 m	End Date	15/02/2021	Equipment Type	Hitachi 13t
Site	Port Kembla	Elevation	2.82 m			Mounting	Track
Job Number	30013038	Datum	MGA94 Zone 56/AHD				

Inclination 90°
Azimuth
North
Survey

SMEC

Pit Identifier: **TP05**

Method	Casing Support Water (Gain/Loss)	Run (TCR) RQD	Sampling	Testing: Strength SPT, DCP, Is(50) (MPa), PP (UCS kPa), SV (kPa)	Permeability, Level & Inflow	Depth (m) / Elevation	Graphic Log	Soil Code	Depth / RL	Soil / Rock Material Description	Moisture Condition Consistency Density	Colour	Weathering & Alteration	Rock Strength	Inferred Rock Strength Point Load Is(50) ● - Axial ○ - Diametral (VL -0.1, L -0.3, M -1, H -3, VH -10, EH)	Relative Strength Soil-Rock	Defect Spacing (mm) (0, 2, 20, 200, 2000)	Visual	Fabric, Structure & Defect Description	Group Defects	Origin, Stratigraphic Unit & General Observations	Installation
EX	No casing used		ES	2, 2, 3	Not Observed	0.0 / 2.8			2.82	FILL Gravelly CLAY with sand: medium plasticity, dark grey, gravel is medium to coarse grained, angular, sand is medium to coarse grained, trace cobbles, trace silt.											FILL	TP05
									0.30 / 2.52	FILL Clayey GRAVEL with sand: medium to coarse grained, poorly graded, angular, dark grey, sand is medium to coarse grained.												
			B	7, 10		0.5 / 2.3																0.5
			ES			1.0 / 1.8																1.0
									1.40 / 1.42	SAND: medium to coarse grained, pale brown.	L - MD										AEOLIAN	1.5
			ES			1.5 / 1.3																
						2.0 / 0.8		SP														2.0
						2.5 / 0.3			2.60													2.5
										Hole Terminated at 2.60 m Termination due to cave-in												2.6
			ES			3.0 / -0.2																3.0
						3.5 / -0.7																3.5
						4.0																

Observations and Comments

Penetrometer Notes
Type: DCP9
Blows per 100 mm

Notes
Classifications compliant with AS1726-2017: Geotechnical Site Investigations unless otherwise noted.
Defect Log Abridged. Additional detail in digital dataset. Lugeon: BS5930:1999
For Inclined Holes: Angles reported in defects are apparent dip from core horizontal unless as α or β.
Refer to explanatory notes for SMEC logs for details of abbreviations or basis of description.

Logged By	TH	Date	15/02/2021
Approved By	SRM	Date	31/03/2021
Status	1	Page	1 of 1

SMEC 2.10.7.2 LIB GLB Log _ SMEC HYBRID BOREHOLE LANDSCAPE 30013038 GINT.GPJ <<DrawingFile>> 31/03/2021 17:32 10.02.00.04 Datgel Tools | Lib: SMEC 2.10.7 2020-08-20 Prj: SMEC 2.10.8 2020-09-10

Geological & Engineering Log

Project	Preliminary Geotechnical Investigation	East	307759.1 m	Start Date	17/02/2021	Contractor	Ledacon
Client	Manildra Group Pty Ltd	North	6183073.4 m	End Date	17/02/2021	Equipment Type	Hitachi 13t
Site	Port Kembla	Elevation	1.33 m			Mounting	Track
Job Number	30013038	Datum	MGA94 Zone 56/AHD				

Inclination 90°
Azimuth
North
Survey

SMEC

Pit Identifier: **TP06**

Method: EX
Casing Support: No casing used
Water (Gain/Loss)
Run (TCR) RQD
Sampling
Testing: Strength SPT, DCP, Is(50) (MPa), PP (UCS kPa), SV (kPa)
Permeability, Level & Inflow: 17/02/21

Depth (m) / Elevation	Soil Code	Depth / RL	Soil / Rock Material Description	Moisture Condition	Consistency Density	Colour	Weathering & Alteration	Rock Strength	Origin, Stratigraphic Unit & General Observations
0.0 / 1.3		1.33	FILL SAND with gravel trace silt: fine to coarse grained, brown, dark grey, gravel is fine to coarse grained, angular, trace cobbles.						FILL
0.5 / 0.8	SP	0.50 / 0.83	SAND: fine to coarse grained, pale grey, pale brown.	M	L - MD				AEOLIAN
1.0 / 0.3				W					
1.30					MD				
1.5 / -0.2	SP	0.03 / 1.50	Sand: fine to coarse grained, pale grey, pale brown.						ESTUARINE?
			Hole Terminated at 1.50 m Termination due to cave-in						

Sampling: ES

Strength SPT, DCP, Is(50) (MPa), PP (UCS kPa), SV (kPa): 1, 2, 2, 1, 2, 2, 1, 1, 2, 1, 1, 4, 10, 12, 14, 15, 17, 16, 18, 22, 20, 22, 23

Graphic Log

Inferred Rock Strength — Point Load Is(50) ● - Axial ○ - Diametral: VL 0.1, L 0.3, M 1, H 3, VH 10, EH

Relative Strength Soil-Rock: 0

Defect Spacing (mm): 0, 2, 20, 200, 2000

Visual

Fabric, Structure & Defect Description

Group Defects

Installation: TP06

Observations and Comments

Penetrometer Notes
Type: DCP9
Blows per 100 mm

Notes
Classifications compliant with AS1726-2017: Geotechnical Site Investigations unless otherwise noted.
Defect Log Abridged. Additional detail in digital dataset. Lugeon: BS5930:1999
For Inclined Holes: Angles reported in defects are apparent dip from core horizontal unless as α or β.
Refer to explanatory notes for SMEC logs for details of abbreviations or basis of description.

Logged By	TH	Date	17/02/2021
Approved By	SRM	Date	31/03/2021
Status	1	Page	1 of 1

SMEC 2.10.7.2 LIB GLB Log _ SMEC HYBRID BOREHOLE LANDSCAPE 30013038 GINT.GPJ <<DrawingFile>> 31/03/2021 17:32 10.02.00.04 Datgel Tools | Lib: SMEC 2.10.7 2020-08-20 Prj: SMEC 2.10.8 2020-09-10

Geological & Engineering Log

Project	Preliminary Geotechnical Investigation	East	307770.4 m	Start Date	15/02/2021	Contractor	Ledacon
Client	Manildra Group Pty Ltd	North	6183062.6 m	End Date	15/02/2021	Equipment Type	Hitachi 13t
Site	Port Kembla	Elevation	2.56 m			Mounting	Track
Job Number	30013038	Datum	MGA94 Zone 56/AHD				

Inclination 90°
Azimuth
North
Survey

SMEC

Pit Identifier: **TP07**

Method: EX
Casing Support: No casing used
Water (Gain/Loss)
Run (TCR) RQD
Sampling: ES, ES, ES, ES
Testing: Strength SPT, DCP, Is(50) (MPa), PP (UCS kPa), SV (kPa); Permeability, Level & Inflow

Depth (m) / Elevation	Soil Code	Depth RL	Soil / Rock Material Description	Moisture Condition	Consistency Density	Colour	Weathering & Alteration	Rock Strength	Origin, Stratigraphic Unit & General Observations	Installation
0.0 / 2.6		2.56	FILL Bouldery SAND with gravel: fine to coarse grained, dark grey, boulders are up to 0.8m in diameter, gravel is fine to coarse grained, angular to sub-angular.						FILL 0.20: -0.5m Bonded Fibro - potential ACM fragment observed 0.70: -1.0m Bonded Fibro - potential ACM fragment observed	TP07
0.5 / 2.1										0.5
1.0 / 1.6		1.20								1.0
		1.36	SAND: fine to coarse grained, pale brown, with black carbonaceous lamination.	M	L - MD				AEOLIAN	
1.5 / 1.1										1.5
2.0 / 0.6	SP									2.0
2.5 / 0.1				W						2.5
		2.60 / -0.04	Sand: fine to coarse grained, pale brown, with black carbonaceous lamination.						ESTUARINE?	
	SP									
3.0 / -0.4		3.00	Hole Terminated at 3.00 m Target depth							3.0 / 3.0
3.5 / -0.9										3.5
4.0										

Inferred Rock Strength — Point Load Is(50) (● - Axial, ○ - Diametral): VL 0.1, L 0.3, M 1, H 3, VH 10, EH
Relative Strength Soil-Rock: 0
Defect Spacing (mm): 2, 20, 200, 2000
Visual
Fabric, Structure & Defect Description
Group Defects

Observations and Comments

Notes: Classifications compliant with AS1726-2017: Geotechnical Site Investigations unless otherwise noted.
Defect Log Abridged. Additional detail in digital dataset. Lugeon: BS5930:1999
For Inclined Holes: Angles reported in defects are apparent dip from core horizontal unless as α or β.
Refer to explanatory notes for SMEC logs for details of abbreviations or basis of description.

Logged By	TH	Date	15/02/2021
Approved By	SRM	Date	31/03/2021
Status	1	Page	1 of 1

SMEC 2.10.7.2 LIB GLB Log _ SMEC HYBRID BOREHOLE LANDSCAPE 30013038 GINT.GPJ <<DrawingFile>> 31/03/2021 17:32 10.02.00.04 Datgel Tools | Lib: SMEC 2.10.7 2020-08-20 Prj: SMEC 2.10.8 2020-09-10

Geological & Engineering Log

Project	Preliminary Geotechnical Investigation	East	307835.0 m	Start Date	16/02/2021	Contractor	Ledacon
Client	Manildra Group Pty Ltd	North	6183119.6 m	End Date	16/02/2021	Equipment Type	Hitachi 13t
Site	Port Kembla	Elevation	3.79 m			Mounting	Track
Job Number	30013038	Datum	MGA94 Zone 56/AHD				

Inclination 90°
Azimuth
North
Survey

SMEC

Pit Identifier: **TP08**

Method: EX
Casing Support Water (Gain/Loss): No casing used
Run (TCR) RQD
Sampling: ES B, ES, ES, ES
Testing: Strength SPT, DCP, Is(50) (MPa), PP (UCS kPa), SV (kPa); Permeability, Level & Inflow: Not Observed
Graphic Log
Soil Code: SP

Depth (m) / Elevation	Depth / RL	Soil / Rock Material Description	Moisture Condition	Consistency Density	Colour	Weathering & Alteration	Rock Strength	Origin, Stratigraphic Unit & General Observations
0.0 / 3.8	3.79 – 0.15	GRAVEL: fine to coarse grained, angular, pale grey, grey.						CEMENTED SLAG
	3.64 – 0.45	FILL Silty GRAVEL with sand: fine to medium grained, poorly graded, angular, brown, red, gravel is iron slag, sand and is coarse grained, trace medium plasticity clay.						FILL
0.5 / 3.3	3.34 – 1.00	FILL SAND trace gravel with clay: fine to coarse grained, grey, dark grey, gravel is fine to medium grained, angular, trace silt.						
1.0 / 2.8	2.79 – 1.70	SAND: fine to coarse grained, red, orange, brown.	M	L - MD				AEOLIAN
1.5 / 2.3								
		Hole Terminated at 1.70 m Termination due to cave-in						
2.0 / 1.8								
2.5 / 1.3								
3.0 / 0.8								
3.5 / 0.3								
4.0								

Inferred Rock Strength — Point Load Is(50) (● - Axial, O - Diametral): VL -0.1, L -0.3, M -1, H -3, VH -10, EH

Relative Strength Soil-Rock: 0

Defect Spacing (mm): 2, 20, 200, 2000

Visual

Fabric, Structure & Defect Description

Group Defects

Installation: TP08 — 0.5, 1.0, 1.5, 1.7, 2.0, 2.5, 3.0, 3.5

Observations and Comments
cave-in at 1.7m

Notes
Classifications compliant with AS1726-2017: Geotechnical Site Investigations unless otherwise noted.
Defect Log Abridged. Additional detail in digital dataset. Lugeon: BS5930:1999
For Inclined Holes: Angles reported in defects are apparent dip from core horizontal unless as α or β.
Refer to explanatory notes for SMEC logs for details of abbreviations or basis of description.

Logged By	TH	Date	16/02/2021
Approved By	SRM	Date	31/03/2021
Status	1	Page	1 of 1

SMEC 2.10.7.2 LIB GLB Log _ SMEC HYBRID BOREHOLE LANDSCAPE 30013038 GINT.GPJ <<DrawingFile>> 31/03/2021 17:33 10.02.00.04 Datgel Tools | Lib: SMEC 2.10.7 2020-08-20 Prj: SMEC 2.10.8 2020-09-10

Geological & Engineering Log

Project	Preliminary Geotechnical Investigation	East	307900.2 m	Start Date	17/02/2021	Contractor	Ledacon
Client	Manildra Group Pty Ltd	North	6183079.3 m	End Date	17/02/2021	Equipment Type	Hitachi 13t
Site	Port Kembla	Elevation	14.64 m			Mounting	Track
Job Number	30013038	Datum	MGA94 Zone 56/AHD				

Inclination 90°
Azimuth
North
Survey

SMEC

Pit Identifier: **TP09**

Method	Casing Support Water (Gain/Loss)	Run (TCR) RQD	Sampling	Testing: Strength SPT, DCP, Is(50) (MPa), PP (UCS kPa), SV (kPa)	Testing: Permeability, Level & Inflow	Depth (m) Elevation	Graphic Log	Soil Code	Depth RL	Soil / Rock Material Description	Moisture Condition Consistency Density	Colour	Weathering & Alteration	Rock Strength	Inferred Rock Strength Point Load Is(50) ● - Axial O - Diametral (VL -0.1, L -0.3, M -1, H -3, VH -10, EH)	Relative Strength Soil-Rock (0)	Defect Spacing (mm) (2, 20, 200, 2000)	Visual	Fabric, Structure & Defect Description	Group Defects	Origin, Stratigraphic Unit & General Observations	Installation
EX	No casing used				Not Observed	0.0 / 14.6			14.64	FILL BOULDERS with gravel trace cobbles: brown, boulders are up to 0.6m in diameter, extremely to highly weathered sandstone, onion ring weathering.										FILL	TP09
									0.40 / 14.24	FILL Clayey BOULDERS trace gravel: grey, trace sand, boulders are up to 0.6m in diameter, moderately weathered to slightly weathered sandstone.											
						0.5 / 14.1															0.5
						1.0 / 13.6															1.0
						1.5 / 13.1															1.5
						2.0 / 12.6															2.0
									2.40												2.4
						2.5 / 12.1				Hole Terminated at 2.40 m Target depth											2.5
						3.0 / 11.6															3.0
						3.5 / 11.1															3.5
						4.0															

Observations and Comments
Sandstone stockpile testpit

Notes
Classifications compliant with AS1726-2017: Geotechnical Site Investigations unless otherwise noted.
Defect Log Abridged. Additional detail in digital dataset. Lugeon: BS5930:1999
For Inclined Holes: Angles reported in defects are apparent dip from core horizontal unless as α or β.
Refer to explanatory notes for SMEC logs for details of abbreviations or basis of description.

Logged By	TH	Date	17/02/2021
Approved By	SRM	Date	31/03/2021
Status	1	Page	1 of 1

SMEC 2.10.7.2 LIB GLB Log _ SMEC HYBRID BOREHOLE LANDSCAPE 30013038 GINT.GPJ <<DrawingFile>> 31/03/2021 17:33 10.02.00.04 Datgel Tools | Lib: SMEC 2.10.7 2020-08-20 Prj: SMEC 2.10.8 2020-09-10

Geological & Engineering Log

Project	Preliminary Geotechnical Investigation	East	307842.8 m	Start Date	16/02/2021	Contractor	Ledacon
Client	Manildra Group Pty Ltd	North	6183041.3 m	End Date	16/02/2021	Equipment Type	Hitachi 13t
Site	Port Kembla	Elevation	2.93 m			Mounting	Track
Job Number	30013038	Datum	MGA94 Zone 56/AHD				

Inclination 90°
Azimuth
North
Survey

SMEC

Pit Identifier: **TP10**

Method: EX
Casing Support: No casing used
Water (Gain/Loss)
Run (TCR) RQD
Sampling: ES
Testing: Strength SPT, DCP, Is(50) (MPa), PP (UCS kPa), SV (kPa)
Permeability, Level & Inflow: 16/02/21

Depth (m) / Elevation	Depth RL	Soil / Rock Material Description	Moisture Condition	Consistency Density	Soil Code
0.0 / 2.9	2.93	GRAVEL: medium to coarse grained, angular, pale grey, grey.			
	0.20				
	2.73	FILL Gravelly Silty SAND: coarse grained, dark grey, black, gravel is fine to coarse grained, angular, with iron slag and trace iron material.			
	0.40				
0.5 / 2.4	2.53	FILL Gravelly CLAY trace cobbles: high plasticity, dark brown, red brown, gravel is fine to coarse grained, angular with iron slag an trace iron material, trace coarse grained sand.			
1.0 / 1.9					
1.5 / 1.4					
	1.90				
2.0 / 0.9	1.03	CLAY trace silt: high plasticity, grey, with dark and pale grey laminations, trace fine to medium grained sand.	W>PL		CH
	2.10				
	0.83	SAND: fine to coarse grained, orange, pale brown, trace sea shells.	W		SP
	2.50				
2.5 / 0.4		Hole Terminated at 2.50 m Termination due to cave-in			
3.0 / -0.1					
3.5 / -0.6					
4.0					

Colour
Weathering & Alteration
Rock Strength
Inferred Rock Strength — Point Load Is(50) ● - Axial O - Diametral: VL -0.1, L -0.3, M -1, H -3, VH -10, EH
Relative Strength Soil-Rock
Defect Spacing (mm): 0, 2, 20, 200, 2000
Visual
Fabric, Structure & Defect Description
Group Defects

Origin, Stratigraphic Unit & General Observations:
- CEMENTED SLAG
- FILL
- ESTUARINE?

Installation: TP10

Observations and Comments

Notes
Classifications compliant with AS1726-2017: Geotechnical Site Investigations unless otherwise noted.
Defect Log Abridged. Additional detail in digital dataset. Lugeon: BS5930:1999
For Inclined Holes: Angles reported in defects are apparent dip from core horizontal unless as α or β.
Refer to explanatory notes for SMEC logs for details of abbreviations or basis of description.

Logged By	TH	Date	16/02/2021
Approved By	SRM	Date	31/03/2021
Status	1	Page	1 of 1

SMEC 2.10.7.2 LIB GLB Log _ SMEC HYBRID BOREHOLE LANDSCAPE 30013038 GINT.GPJ <<DrawingFile>> 31/03/2021 17:33 10.02.00.04 Datgel Tools | Lib: SMEC 2.10.7 2020-08-20 Prj: SMEC 2.10.8 2020-09-10

Geological & Engineering Log

Project	Preliminary Geotechnical Investigation	East	307815.8 m	Start Date	16/02/2021	Contractor	Ledacon
Client	Manildra Group Pty Ltd	North	6183046.7 m	End Date	16/02/2021	Equipment Type	Hitachi 13t
Site	Port Kembla	Elevation	4.33 m			Mounting	Track
Job Number	30013038	Datum	MGA94 Zone 56/AHD				

Inclination 90°
Azimuth
North
Survey

SMEC

Pit Identifier: **TP10A**

Method	Casing Support Water (Gain/Loss)	Run (TCR) RQD	Sampling	Testing: Strength SPT, DCP, Is(50) (MPa), PP (UCS kPa), SV (kPa)	Testing: Permeability, Level & Inflow	Depth (m) / Elevation	Graphic Log	Soil Code	Depth / RL	Soil / Rock Material Description	Moisture Condition Consistency Density	Colour	Weathering & Alteration	Rock Strength	Inferred Rock Strength (Point Load Is(50) ● - Axial O - Diametral)	Relative Strength Soil-Rock	Defect Spacing (mm)	Visual	Fabric, Structure & Defect Description	Group Defects	Origin, Stratigraphic Unit & General Observations	Installation
EX	No casing used				Not Observed	0.0 / 4.3			4.33	FILL BOULDERS with cobbles with gravel: boulder grained, poorly graded, angular to sub-angular, grey, pale grey, brown, pale brown, boulders up to 0.6m, extremely to highly weathered sandstone, onion ring weathering.					VL -0.1 L -0.3 M -1 H -3 VH -10 EH	0	2 20 200 2000				FILL	TP10A
						0.5 / 3.8			0.50 / 3.83	FILL BOULDERS with cobbles trace gravel: grey, pale grey, brown, pale brown, boulders up to 0.6m in diameter, moderately weathered sandstone.												0.5
						1.0 / 3.3																1.0
						1.5 / 2.8																1.5
						2.0 / 2.3			2.00	Hole Terminated at 2.00 m Target depth												2.0
						2.5 / 1.8																2.5
						3.0 / 1.3																3.0
						3.5 / 0.8																3.5
						4.0																

Observations and Comments

Notes
Classifications compliant with AS1726-2017: Geotechnical Site Investigations unless otherwise noted.
Defect Log Abridged. Additional detail in digital dataset. Lugeon: BS5930:1999
For Inclined Holes: Angles reported in defects are apparent dip from core horizontal unless as α or β.
Refer to explanatory notes for SMEC logs for details of abbreviations or basis of description.

Logged By	TH	Date	16/02/2021
Approved By	SRM	Date	31/03/2021
Status	1	Page	1 of 1

SMEC 2.10.7.2 LIB GLB Log _ SMEC HYBRID BOREHOLE LANDSCAPE 30013038 GINT.GPJ <<DrawingFile>> 31/03/2021 17:33 10.02.00.04 Datgel Tools | Lib: SMEC 2.10.7 2020-08-20 Prj: SMEC 2.10.8 2020-09-10

Geological & Engineering Log

Project	Preliminary Geotechnical Investigation	East	307771.0 m	Start Date	15/02/2021	Contractor	Ledacon
Client	Manildra Group Pty Ltd	North	6183003.4 m	End Date	15/02/2021	Equipment Type	Hitachi 13t
Site	Port Kembla	Elevation	2.38 m			Mounting	Track
Job Number	30013038	Datum	MGA94 Zone 56/AHD				

Inclination 90°
Azimuth
North
Survey

SMEC

Pit Identifier: **TP11**

Testing

Depth (m) / Elevation	Depth RL	Soil / Rock Material Description	Moisture Condition	Consistency Density	Soil Code	Sampling	Strength SPT, DCP, Is(50) (MPa), PP (UCS kPa), SV (kPa)	Origin, Stratigraphic Unit & General Observations
0.0 / 2.4	2.38	GRAVEL: medium to coarse grained, angular, grey, pale grey.						CEMENTED SLAG
	0.20							
	2.18	FILL Gravelly CLAY with sand: medium plasticity, dark grey, gravel is medium to coarse grained, angular, sand is medium to coarse grained, trace glass.				ES	11, 24, 18, 19	FILL
0.5 / 1.9	0.60							
	1.78	FILL Clayey SAND trace gravel: medium to coarse grained, brown, pale brown, orange, gravel is medium to coarse grained, angular.				B ES	11, 6, 11, 10, 16, 10, 8	
1.0 / 1.4	1.10							
	1.28	FILL SAND with cobbles: medium to coarse grained, orange, red brown, cobbles are extremely weathered, very low strength sandstone.						
	1.30							
	1.08	SAND: fine to coarse grained, pale brown.	M	L - MD	SP	ES	12, 14, >>	AEOLIAN
1.5 / 0.9			W					
2.0 / 0.4						ES		
	2.40							
	-0.02	SAND: fine to coarse grained, pale brown.			SP			ESTUARINE?
2.5 / -0.1						ES		
	3.00							
3.0 / -0.6		Hole Terminated at 3.00 m Target depth						
3.5 / -1.1								
4.0								

Method: EX
Casing Support: No casing used
Water (Gain/Loss): 15/02/21
Run (TCR) RQD
Permeability, Level & Inflow
Graphic Log
Colour
Weathering & Alteration
Rock Strength
Inferred Rock Strength — Point Load Is(50) ● - Axial ○ - Diametral: VL -0.1, L -0.3, M -1, H -3, VH -10, EH
Relative Strength Soil-Rock
Defect Spacing (mm): 0, 2, 20, 200, 2000
Visual
Fabric, Structure & Defect Description
Group Defects
Installation: TP11

Observations and Comments

Penetrometer Notes
Type: DCP9
Blows per 100 mm

Notes
Classifications compliant with AS1726-2017: Geotechnical Site Investigations unless otherwise noted.
Defect Log Abridged. Additional detail in digital dataset. Lugeon: BS5930:1999
For Inclined Holes: Angles reported in defects are apparent dip from core horizontal unless as α or β.
Refer to explanatory notes for SMEC logs for details of abbreviations or basis of description.

Logged By	TH	Date	15/02/2021
Approved By	SRM	Date	31/03/2021
Status	1	Page	1 of 1

SMEC 2.10.7.2 LIB GLB Log _ SMEC HYBRID BOREHOLE LANDSCAPE 30013038 GINT.GPJ <<DrawingFile>> 31/03/2021 17:33 10.02.00.04 Datgel Tools | Lib: SMEC 2.10.7 2020-08-20 Prj: SMEC 2.10.8 2020-09-10

Geological & Engineering Log

Project	Preliminary Geotechnical Investigation	East	307804.1 m	Start Date	17/02/2021	Contractor	Ledacon
Client	Manildra Group Pty Ltd	North	6183011.6 m	End Date	17/02/2021	Equipment Type	Hitachi 13t
Site	Port Kembla	Elevation	2.64 m			Mounting	Track
Job Number	30013038	Datum	MGA94 Zone 56/AHD				

Inclination 90°
Azimuth
North
Survey

SMEC

Pit Identifier: **TP12**

Testing

Depth (m) / Elevation	Soil Code	Depth / RL	Soil / Rock Material Description	Moisture Condition	Consistency Density	Sampling	Origin, Stratigraphic Unit & General Observations
0.0 / 2.6		0.10 / 2.54	GRAVEL: fine to coarse grained, poorly graded, angular, grey, pale grey.				CEMENTED SLAG
			FILL Gravelly Silty SAND: fine to coarse grained, dark brown, grey, gravel is fine to coarse grained, angular, iron slag.			ES	FILL
0.5 / 2.1						ES	
		0.90 / 1.74	FILL GRAVEL with cobbles trace sand: coarse grained, poorly graded, angular, dark grey, iron slag, sand is coarse grained, trace iron material.				
1.0 / 1.6		1.20 / 1.44	SAND: fine to coarse grained, pale brown, red brown, trace sea shells.	M	L - MD	ES	AEOLIAN
1.5 / 1.1							
	SP					ES	
2.0 / 0.6						ES	
2.5 / 0.1		2.60 / 0.04	Sand: fine to coarse grained, pale brown, red brown, trace sea shells.	W			ESTUARINE?
	SP	2.90					
3.0 / -0.4			Hole Terminated at 2.90 m Termination due to cave-in				
3.5 / -0.9							
4.0							

Method: EX
Casing Support: No casing used
Water (Gain/Loss): 17/02/21
Run (TCR) RQD
Strength SPT, DCP, Is(50) (MPa), PP (UCS kPa), SV (kPa)
Permeability, Level & Inflow
Graphic Log
Weathering & Alteration
Rock Strength
Inferred Rock Strength — Point Load Is(50) ● - Axial O - Diametral: VL -0.1, L -0.3, M -1, H -3, VH -10, EH
Relative Strength Soil-Rock: 0
Defect Spacing (mm): 2, 20, 200, 2000
Visual
Fabric, Structure & Defect Description
Group Defects
Installation: TP12

Observations and Comments
hole abandoned at 2.9m due to cave-in

Notes
Classifications compliant with AS1726-2017: Geotechnical Site Investigations unless otherwise noted.
Defect Log Abridged. Additional detail in digital dataset. Lugeon: BS5930:1999
For Inclined Holes: Angles reported in defects are apparent dip from core horizontal unless as α or β.
Refer to explanatory notes for SMEC logs for details of abbreviations or basis of description.

Logged By	TH	Date	17/02/2021
Approved By	SRM	Date	31/03/2021
Status	1	Page	1 of 1

SMEC 2.10.7.2 LIB GLB Log _ SMEC HYBRID BOREHOLE LANDSCAPE 30013038 GINT.GPJ <<DrawingFile>> 31/03/2021 17:33 10.02.00.04 Datgel Tools | Lib: SMEC 2.10.7 2020-08-20 Prj: SMEC 2.10.8 2020-09-10

Geological & Engineering Log

Project	Preliminary Geotechnical Investigation	East	307774.2 m	Start Date	17/02/2021	Contractor	Ledacon
Client	Manildra Group Pty Ltd	North	6183044.4 m	End Date	17/02/2021	Equipment Type	Hitachi 13t
Site	Port Kembla	Elevation	2.59 m			Mounting	Track
Job Number	30013038	Datum	MGA94 Zone 56/AHD				

Inclination 90°
Azimuth
North
Survey

SMEC

Pit Identifier: **TP13**

Method: EX
Casing Support: No casing used
Water (Gain/Loss)
Run (TCR) RQD
Sampling: ES
Testing: Strength SPT, DCP, Is(50) (MPa), PP (UCS kPa), SV (kPa)
Permeability, Level & Inflow: 17/02/21

Depth (m) / Elevation	Depth RL	Soil / Rock Material Description	Moisture Condition	Consistency Density	Soil Code
0.0 / 2.6	2.59	GRAVEL: fine to medium grained, angular, pale grey, grey.			
	0.20				
	2.39	FILL Gravelly CLAY trace cobbles: medium plasticity, dark grey, dark brown, gravel is fine to coarse grained, angular, iron slag.			
	0.50				
0.5 / 2.1	2.09	FILL Sandy GRAVEL with clay: fine to coarse grained, poorly graded, brown, gravel is iron slag, sand is medium to coarse grained, trace brick.			
1.0 / 1.6					
1.5 / 1.1					
	2.00				
2.0 / 0.6	0.59	Sandy CLAY: high plasticity, dark grey/pale grey mottled clay and sand, sand is fine to coarse grained.	M	F	CH
	2.20				
	0.39	SAND: fine to coarse grained, pale brown, pale grey.		L - MD	SP
2.5 / 0.1			W		
	2.60				
	-0.01	Sand: fine to coarse grained, pale brown, pale grey.			SP
3.0 / -0.4					
	3.50				
3.5 / -0.9		Hole Terminated at 3.50 m Target depth			
4.0					

Colour
Weathering & Alteration
Rock Strength
Inferred Rock Strength — Point Load Is(50) ● - Axial ○ - Diametral — VL -0.1, L -0.3, M -1, H -3, VH -10, EH
Relative Strength Soil-Rock
Defect Spacing (mm): 0, 2, 20, 200, 2000
Visual
Fabric, Structure & Defect Description
Group Defects

Origin, Stratigraphic Unit & General Observations:
- CEMENTED SLAG
- FILL
- ESTUARINE?
- 2.10: Strong hydrocarbon odour and possible black oil staining noted in sandy clay
- AEOLIAN
- ESTUARINE?

Installation: TP13

Observations and Comments
hydrocarbon contaminated soil encountered at 2 -2.2m

Notes
Classifications compliant with AS1726-2017: Geotechnical Site Investigations unless otherwise noted.
Defect Log Abridged. Additional detail in digital dataset. Lugeon: BS5930:1999
For Inclined Holes: Angles reported in defects are apparent dip from core horizontal unless as α or β.
Refer to explanatory notes for SMEC logs for details of abbreviations or basis of description.

Logged By	TH	Date	17/02/2021
Approved By	SRM	Date	31/03/2021
Status	1	Page	1 of 1

SMEC 2.10.7.2 LIB GLB Log _ SMEC HYBRID BOREHOLE LANDSCAPE 30013038 GINT.GPJ <<DrawingFile>> 31/03/2021 17:33 10.02.00.04 Datgel Tools | Lib: SMEC 2.10.7 2020-08-20 Prj: SMEC 2.10.8 2020-09-10

Geological & Engineering Log

Project	Preliminary Geotechnical Investigation	East	307756.1 m	Start Date	17/02/2021	Contractor	Ledacon
Client	Manildra Group Pty Ltd	North	6183035.6 m	End Date	17/02/2021	Equipment Type	Hitachi 13t
Site	Port Kembla	Elevation	2.40 m			Mounting	Track
Job Number	30013038	Datum	MGA94 Zone 56/AHD				

Inclination 90°
Azimuth
North
Survey

SMEC

Pit Identifier: **TP14**

Method: EX
Casing Support: No casing used
Water (Gain/Loss)
Run (TCR) RQD
Testing: Strength SPT, DCP, Is(50) (MPa), PP (UCS kPa), SV (kPa)
Permeability, Level & Inflow: 17/02/21

Sampling	Depth (m) / Elevation	Graphic Log	Soil Code	Depth RL	Soil / Rock Material Description	Moisture Condition	Consistency Density	Origin, Stratigraphic Unit & General Observations
ES	0.0 / 2.4			2.40	GRAVEL: fine to medium grained, poorly graded, angular, pale grey, grey.			CEMENTED SLAG
				0.20				FILL
ES	0.5 / 1.9			2.20	FILL Gravelly CLAY trace sand: high plasticity, brown, dark grey, gravel is fine to coarse grained, angular, iron slag, sand is medium to coarse grained, trace boulders and brick.			
	1.0 / 1.4			1.20				
ES			CH	1.20	Sandy CLAY: high plasticity, dark grey/pale grey mottled with some decomposed organic material.	W>PL	F	ESTUARINE?
				1.40				1.30: Strong hydrocarbon odour and possible black oil staining noted in sandy clay
	1.5 / 0.9			1.00	SAND: fine to coarse grained, pale brown, pale orange.	M	L - MD	AEOLIAN
ES			SP			W		
	2.0 / 0.4							
				2.40				
ES	2.5 / -0.1		SP	0.00	Sand: fine to coarse grained, pale brown, pale orange.			ESTUARINE?
				2.70				
					Hole Terminated at 2.70 m Target depth			
	3.0 / -0.6							
	3.5 / -1.1							
	4.0							

Colour
Weathering & Alteration
Rock Strength
Inferred Rock Strength — Point Load Is(50) ● - Axial ○ - Diametral: VL -0.1, L -0.3, M -1, H -3, VH -10, EH
Relative Strength Soil-Rock: 0
Defect Spacing (mm): 2, 20, 200, 2000
Visual
Fabric, Structure & Defect Description
Group Defects
Installation: TP14 — 0.5, 1.0, 1.5, 2.0, 2.5, 2.7, 3.0, 3.5

Observations and Comments
hydrocarbon contaminated soil observed at 1.2-1.4m

Notes
Classifications compliant with AS1726-2017: Geotechnical Site Investigations unless otherwise noted.
Defect Log Abridged. Additional detail in digital dataset. Lugeon: BS5930:1999
For Inclined Holes: Angles reported in defects are apparent dip from core horizontal unless as α or β.
Refer to explanatory notes for SMEC logs for details of abbreviations or basis of description.

Logged By	TH	Date	17/02/2021
Approved By	SRM	Date	31/03/2021
Status	1	Page	1 of 1

SMEC 2.10.7.2 LIB GLB Log _ SMEC HYBRID BOREHOLE LANDSCAPE 30013038 GINT.GPJ <<DrawingFile>> 31/03/2021 17:33 10.02.00.04 Datgel Tools | Lib: SMEC 2.10.7 2020-08-20 Prj: SMEC 2.10.8 2020-09-10

Geological & Engineering Log

Project	Detailed Site Investigation	East	307678.8 m	Start Date	12/10/2021	Contractor	Ledacon Pty Ltd	Inclination	90°
Client	Manildra Group Pty Ltd	North	6182977.6 m	End Date	12/10/2021	Equipment	13 Tonne Excavator	Azimuth	
Site	Port Kembla	Elevation	3.073 m	Dimensions	3.00 m x 0.60 m	Mounting	Track	North	
Job Number	30013038	Datum	MGA94 Zone 56/AHD					Survey	

SMEC

Pit Identifier: **TP15**

Method	Casing Support Water (Gain/Loss)	Run (TCR) RQD	Sampling	Testing: Strength SPT, DCP, Is(50) (MPa), PP (UCS kPa), SV (kPa)	Testing: Permeability, Level & Inflow	Depth (m) / Elevation	Graphic Log	Soil Code	Depth / RL	Soil / Rock Material Description	Moisture Condition	Consistency Density	Alteration	Weathering	Rock Strength	Inferred Rock Strength Point Load Is(50) ● - Axial ○ - Diametral	Relative Strength Soil-Rock	Defect Spacing (mm)	Visual	Fabric, Structure & Defect Description	Group Defects	Origin, Stratigraphic Unit & General Observations	Installation
EX	No casing used		ES		Not Observed	0.0 / 3.1			3.07	FILL Gravelly SAND: fine to coarse grained, dark grey, with foreign materials (glass fragment, brick, plastic).												FILL	
									0.20 / 2.87	FILL Clayey SILT: pale grey mottled pale yellow.												FILL (UNIT 1D)	
			ES			0.5 / 2.6				0.60 m: becoming Clayey SAND, fine to medium grained, brown												0.65: copper pipe diameter 20mm noted	0.5
									0.90 / 2.17	FILL SAND: medium grained, pale yellow orange, with coarse grained gravel and cobbles, trace boulders, trace foreign materials (concrete, reo wire).												FILL	
			ES			1.0 / 2.1																1.20-1.40: a large fragment of reinforced concrete pipe (diameter ~1.2m) was observed	1.0
									1.40 / 1.67	SAND: medium grained, pale yellow.	M	L										AEOLIAN	
			ES			1.5 / 1.6		SP															1.5
						2.0 / 1.1																2.20: observed collapsing sands	2.0
						2.5 / 0.6			2.50	Hole Terminated at 2.50 m												2.50: collapsing sands	2.5
						3.0 / 0.1																	3.0
						3.5 / -0.4																	3.5
						4.0																	

Observations and Comments
no odour throughout

Notes
Classifications compliant with AS1726-2017: Geotechnical Site Investigations unless otherwise noted.
Defect Log Abridged. Additional detail in digital dataset. Lugeon: BS5930:1999
For Inclined Holes: Angles reported in defects are apparent dip from core horizontal unless as α or β.
Refer to explanatory notes for SMEC logs for details of abbreviations or basis of description.

Logged By	ED	Date	12/10/2021
Approved By	AW	Date	30/11/2021
Status	3	Page	1 of 1

SMEC 2.10.10 UB.GLB Log _SMEC HYBRID BOREHOLE LANDSCAPE 30013038 GINT.GPJ <<DrawingFile>> 30/11/2021 16:43 10.02.00.04 Datgel Tools | Lib: SMEC 2.10.9 2021-08-30 Prj: SMEC 2.10.8 2020-08-10

Geological & Engineering Log

Project	Detailed Site Investigation	East	307682.3 m	Start Date	12/10/2021	Contractor	Ledacon Pty Ltd
Client	Manildra Group Pty Ltd	North	6183015.7 m	End Date	12/10/2021	Equipment	13 Tonne Excavator
Site	Port Kembla	Elevation	4.043 m	Dimensions	3.00 m x 0.60 m	Mounting	Track
Job Number	30013038	Datum	MGA94 Zone 56/AHD				

Inclination 90°
Azimuth
North
Survey

SMEC

Pit Identifier: **TP16**

Method	Casing Support Water (Gain/Loss)	Run (TCR) RQD	Sampling	Testing: Strength SPT, DCP, Is(50) (MPa), PP (UCS kPa), SV (kPa)	Testing: Permeability, Level & Inflow	Depth (m) / Elevation	Graphic Log	Soil Code	Depth / RL	Soil / Rock Material Description	Moisture Condition Consistency Density	Alteration	Weathering	Rock Strength	Inferred Rock Strength Point Load Is(50) ● - Axial ○ - Diametral (VL -0.1, L -0.3, M -1, H -3, VH -10, EH)	Relative Strength Soil-Rock	Defect Spacing (mm)	Visual	Fabric, Structure & Defect Description	Group Defects	Origin, Stratigraphic Unit & General Observations	Installation
EX	No casing used		ES		Not Observed	0.0 / 4.0			4.04	FILL Gravelly SAND: dark grey, trace coarse grained angular to sub-angular gravel.											FILL	
									0.30												0.30: distinct odour (sweet phenolic hydrocarbon)	
									3.74	FILL Clayey GRAVEL: dark grey to black, gravel consisting of mainly coalwash, trace silt.												
						0.5 / 3.5			0.50												FILL (UNIT 1D) 0.50: strong odour (sweet phenolic hydrocarbon)	0.5
									3.54	FILL Clayey SILT: pale brown with mottled yellow, trace plastic, metal rod.												
			ES			1.0 / 3.0																1.0
						1.5 / 2.5			1.60													1.5
									2.44	FILL Clayey SILT: dark brown with mottled yellow, trace sub-rounded gravel.												
			ES																		1.80: strong odour (sweet phenolic hydrocarbon)	
						2.0 / 2.0																2.0
						2.5 / 1.5																2.5
			ES						2.70	2.60 m: increase in moisture, presence of slag and gravel												
										Hole Terminated at 2.70 m Termination due to slow progress on dense material												
						3.0 / 1.0																3.0
						3.5 / 0.5																3.5
						4.0																

Observations and Comments
odour is sweet phenolic odour

Notes
Classifications compliant with AS1726-2017: Geotechnical Site Investigations unless otherwise noted.
Defect Log Abridged. Additional detail in digital dataset. Lugeon: BS5930:1999
For Inclined Holes: Angles reported in defects are apparent dip from core horizontal unless as α or β.
Refer to explanatory notes for SMEC logs for details of abbreviations or basis of description.

Logged By	ED	Date	12/10/2021
Approved By	AW	Date	30/11/2021
Status	3	Page	1 of 1

SMEC 2.10.10 UB.GLB Log _SMEC HYBRID BOREHOLE LANDSCAPE 30013038 GINT.GPJ <<DrawingFile>> 07/12/2021 09:24 10.02.00.04 Datgel Tools | Lib: SMEC 2.10.9 2021-08-30 Prj: SMEC 2.10.8 2020-08-10

Geological & Engineering Log

Project	Detailed Site Investigation	East	307693.2 m	Start Date	12/10/2021	Contractor	Ledacon Pty Ltd
Client	Manildra Group Pty Ltd	North	6183045.7 m	End Date	12/10/2021	Equipment	13 Tonne Excavator
Site	Port Kembla	Elevation	4.033 m	Dimensions	3.00 m x 0.60 m	Mounting	Track
Job Number	30013038	Datum	MGA94 Zone 56/AHD				

Inclination 90°
Azimuth
North
Survey

SMEC

Pit Identifier: **TP17**

Method: EX
Casing Support: No casing used
Water (Gain/Loss)
Run (TCR) RQD
Sampling: ES
Testing: Strength SPT, DCP, Is(50) (MPa), PP (UCS kPa), SV (kPa)
Permeability, Level & Inflow: Not Observed
Graphic Log
Soil Code
Moisture Condition
Consistency Density
Alteration
Weathering
Rock Strength
Inferred Rock Strength — Point Load Is(50) ● - Axial ○ - Diametral (VL -0.1, L -0.3, M -1, H -3, VH -10, EH)
Relative Strength Soil-Rock
Defect Spacing (mm) (0, 2, 20, 200, 2000)
Visual
Fabric, Structure & Defect Description
Group Defects

Depth (m) / Elevation	Depth RL	Soil / Rock Material Description	Origin, Stratigraphic Unit & General Observations	Installation
0.0 / 4.0	4.03	SLAG: pale grey, trace bricks.	CEMENTED SLAG 0.00-0.20: moderately cemented (dense to very dense cemented slag)	
	0.20 / 3.83	FILL Clayey SILT: dark brown with mottled yellow, trace brck and angular to sub-angular gravel.	FILL (UNIT 1D)	
0.5 / 3.5		0.60 m: wood bark	0.50-0.90: slight sweet phenolic hydrocarbon odour observed	0.5
1.0 / 3.0		0.90 m: trace plastic		1.0
1.5 / 2.5	1.70 / 2.33	FILL Silty CLAY: high plasticity, pale brown, with sub-rounded cobbles.	FILL	1.5
2.0 / 2.0				2.0
2.5 / 1.5	2.50 / 1.53	FILL Sandy CLAY: dark grey brown, with black staining from organic matter.	2.50: strong Sweet phenolic hydrocarbon odour	2.5
3.0 / 1.0	2.90 / 1.13 / 3.10	SAND: medium grained, yellow brown. (Moisture: M; Consistency: L)	AEOLIAN	3.0
3.5 / 0.5		Hole Terminated at 3.10 m		3.5
4.0				

Observations and Comments

Notes
Classifications compliant with AS1726-2017: Geotechnical Site Investigations unless otherwise noted.
Defect Log Abridged. Additional detail in digital dataset. Lugeon: BS5930:1999
For Inclined Holes: Angles reported in defects are apparent dip from core horizontal unless as α or β.
Refer to explanatory notes for SMEC logs for details of abbreviations or basis of description.

Logged By	ED	Date	12/10/2021
Approved By	AW	Date	30/11/2021
Status	3	Page	1 of 1

SMEC 2.10.10 LIB.GLB Log _SMEC HYBRID BOREHOLE LANDSCAPE 30013038 GINT.GPJ <<DrawingFile>> 30/11/2021 16:43 10.02.00.04 Datgel Tools | Lib: SMEC 2.10.9 2021-08-30 Prj: SMEC 2.10.8 2020-08-10

Geological & Engineering Log

Project	Detailed Site Investigation	East	307715.4 m	Start Date	12/10/2021	Contractor	Ledacon Pty Ltd	Inclination	90°
Client	Manildra Group Pty Ltd	North	6183077.5 m	End Date	12/10/2021	Equipment	13 Tonne Excavator	Azimuth	
Site	Port Kembla	Elevation	3.863 m	Dimensions	3.00 m x 0.60 m	Mounting	Track	North	
Job Number	30013038	Datum	MGA94 Zone 56/AHD					Survey	

SMEC

Pit Identifier: **TP18**

Method	Casing Support Water (Gain/Loss)	Run (TCR) RQD	Sampling	Testing: Strength SPT, DCP, Is(50) (MPa), PP (UCS kPa), SV (kPa)	Testing: Permeability, Level & Inflow	Depth (m) / Elevation	Graphic Log	Soil Code	Depth / RL	Soil / Rock Material Description	Moisture Condition	Consistency Density	Alteration	Weathering	Rock Strength	Inferred Rock Strength Point Load Is(50) ● - Axial O - Diametral	Relative Strength Soil-Rock	Defect Spacing (mm)	Visual	Fabric, Structure & Defect Description	Group Defects	Origin, Stratigraphic Unit & General Observations	Installation
EX	No casing used		ES		Not Observed	0.0 / 3.9			3.86	FILL GRAVEL: angular to sub-angular, pale grey to black, gravel consisting of mainly slag.						VL L M H VH EH; -0.1 -0.3 -1 -3 -10	0	2 20 200 2000				FILL	
									0.20														
									3.66	FILL Sandy GRAVEL: well rounded and angular to sub-angular, red, gravel mainly appears to be slag nudules. 0.30 m: trace wires													
						0.5 / 3.4																	0.5
						1.0 / 2.9																	1.0
						1.5 / 2.4																	1.5
			ES			2.0 / 1.9																	2.0
						2.5 / 1.4																	2.5
									3.00														
						3.0 / 0.9			0.86	SAND: medium grained, pale yellow.	M	L										ESTUARINE?	3.0
									3.20														
										Hole Terminated at 3.20 m Termination due to unstable pit wall collapsing													
						3.5 / 0.4																	3.5
						4.0																	

Observations and Comments

Notes
Classifications compliant with AS1726-2017: Geotechnical Site Investigations unless otherwise noted.
Defect Log Abridged. Additional detail in digital dataset. Lugeon: BS5930:1999
For Inclined Holes: Angles reported in defects are apparent dip from core horizontal unless as α or β.
Refer to explanatory notes for SMEC logs for details of abbreviations or basis of description.

Logged By	ED	Date	12/10/2021
Approved By	AW	Date	30/11/2021
Status	3	Page	1 of 1

SMEC 2.10.10 UB.GLB Log _SMEC HYBRID BOREHOLE LANDSCAPE 30013038 GINT.GPJ <<DrawingFile>> 07/12/2021 09:24 10.02.00.04 Datgel Tools | Lib: SMEC 2.10.9 2021-08-30 Prj: SMEC 2.10.8 2020-08-10

Geological & Engineering Log

Project	Detailed Site Investigation	East	307746.7 m	Start Date	12/10/2021	Contractor	Ledacon Pty Ltd	Inclination	90°
Client	Manildra Group Pty Ltd	North	6183115.7 m	End Date	12/10/2021	Equipment	13 Tonne Excavator	Azimuth	
Site	Port Kembla	Elevation	3.590 m	Dimensions	3.00 m x 0.60 m	Mounting	Track	North	
Job Number	30013038	Datum	MGA94 Zone 56/AHD					Survey	

SMEC

Pit Identifier: **TP19**

Method	Casing Support Water (Gain/Loss)	Run (TCR) RQD	Sampling	Testing: Strength SPT, DCP, Is(50) (MPa), PP (UCS kPa), SV (kPa)	Testing: Permeability, Level & Inflow	Depth (m) / Elevation	Graphic Log	Soil Code	Depth / RL	Soil / Rock Material Description	Moisture Condition	Consistency Density	Alteration	Weathering	Rock Strength	Inferred Rock Strength Point Load Is(50) ● - Axial ○ - Diametral (VL -0.1, L -0.3, M -1, H -3, VH -10, EH)	Relative Strength Soil-Rock	Defect Spacing (mm) (0, 2, 20, 200, 2000)	Visual	Fabric, Structure & Defect Description	Group Defects	Origin, Stratigraphic Unit & General Observations	Installation
EX	No casing used		ES		Not Observed	0.0 / 3.6			3.59	FILL Sandy GRAVEL: angular to sub-angular, dark brown to dark grey, gravel consisting of mainly coalwash.												FILL 0.00-1.70: coalwash	
			ES			0.5 / 3.1																	0.5
						1.0 / 2.6																	1.0
						1.5 / 2.1				SAND layer at 1.50m to 1.70m, medium grained, pale yellow to orange													1.5
									1.70 / 1.89	FILL Clayey GRAVEL: angular to sub-angular and rounded, dark brown to red, trace sand throughout.													
			ES			2.0 / 1.6																	2.0
						2.5 / 1.1																	2.5
									2.80 / 0.79	SAND: medium grained, pale yellow.	M	MD										AEOLIAN	
			ES			3.0 / 0.6			3.20														3.0
										Hole Terminated at 3.20 m													
						3.5 / 0.1																	3.5
						4.0																	

Observations and Comments

Notes
Classifications compliant with AS1726-2017: Geotechnical Site Investigations unless otherwise noted.
Defect Log Abridged. Additional detail in digital dataset. Lugeon: BS5930:1999
For Inclined Holes: Angles reported in defects are apparent dip from core horizontal unless as α or β.
Refer to explanatory notes for SMEC logs for details of abbreviations or basis of description.

Logged By	ED	Date	12/10/2021
Approved By	AW	Date	30/11/2021
Status	3	Page	1 of 1

SMEC 2.10.10 UB.GLB Log _SMEC HYBRID BOREHOLE LANDSCAPE 30013038 GINT.GPJ <<DrawingFile>> 30/11/2021 16:44 10.02.00.04 Datgel Tools | Lib: SMEC 2.10.9 2021-08-30 Prj: SMEC 2.10.8 2020-08-10

Geological & Engineering Log

Project	Detailed Site Investigation	East	307763.7 m	Start Date	12/10/2021	Contractor	Ledacon Pty Ltd	Inclination	90°
Client	Manildra Group Pty Ltd	North	6183148.4 m	End Date	12/10/2021	Equipment	13 Tonne Excavator	Azimuth	
Site	Port Kembla	Elevation	3.489 m	Dimensions	3.00 m x 0.60 m	Mounting	Track	North	
Job Number	30013038	Datum	MGA94 Zone 56/AHD					Survey	

SMEC

Pit Identifier: **TP20**

Method	Casing Support Water (Gain/Loss)	Run (TCR) RQD	Sampling	Testing: Strength SPT, DCP, Is(50) (MPa), PP (UCS kPa), SV (kPa)	Testing: Permeability, Level & Inflow	Depth (m) / Elevation	Graphic Log	Soil Code	Depth / RL	Soil / Rock Material Description	Moisture Condition	Consistency Density	Alteration	Weathering	Rock Strength	Inferred Rock Strength: Point Load Is(50) (● - Axial, ○ - Diametral)	Relative Strength Soil-Rock	Defect Spacing (mm)	Visual	Fabric, Structure & Defect Description	Group Defects	Origin, Stratigraphic Unit & General Observations	Installation
EX	No casing used		ES		Not Observed	0.0 / 3.5			3.44	FILL Sandy GRAVEL: fine to coarse grained, dark grey to black, gravel consisting of mainly coalwash.						VL -0.1, L -0.3, M -1, H -3, VH -10, EH	0	2, 20, 200, 2000				FILL 0.00-0.05: coalwash	
			ES						0.20	FILL SAND: fine to coarse grained, pale brown.													
									3.29	FILL Gravelly CLAY: medium to high plasticity, orange brown mottled.													
			ES			0.5 / 3.0			0.60														0.5
									2.89	FILL SAND: medium grained, pale yellow with dark grey laminations.												0.60-1.00: reworked estuarine	
									1.00														
			ES			1.0 / 2.5			2.49	SAND: medium grained, orange.	M	L										AEOLIAN	1.0
						1.5 / 2.0																	1.5
										1.80 m: becoming pale yellow													
			ES			2.0 / 1.5			2.20														2.0
										Hole Terminated at 2.20 m													
						2.5 / 1.0																	2.5
						3.0 / 0.5																	3.0
						3.5 / 0.0																	3.5
						4.0																	

Observations and Comments

Notes

Classifications compliant with AS1726-2017: Geotechnical Site Investigations unless otherwise noted.
Defect Log Abridged. Additional detail in digital dataset. Lugeon: BS5930:1999
For Inclined Holes: Angles reported in defects are apparent dip from core horizontal unless as α or β.
Refer to explanatory notes for SMEC logs for details of abbreviations or basis of description.

Logged By	ED	Date	12/10/2021
Approved By	AW	Date	30/11/2021
Status	3	Page	1 of 1

SMEC 2.10.10 UB.GLB Log _SMEC HYBRID BOREHOLE LANDSCAPE 30013038 GINT.GPJ <<DrawingFile>> 30/11/2021 16:44 10.02.00.04 Datgel Tools | Lib: SMEC 2.10.9 2021-08-30 Prj: SMEC 2.10.8 2020-08-10

Geological & Engineering Log

Project	Detailed Site Investigation	East	307773.5 m	Start Date	12/10/2021	Contractor	Ledacon Pty Ltd	Inclination	90°
Client	Manildra Group Pty Ltd	North	6183119.3 m	End Date	12/10/2021	Equipment	13 Tonne Excavator	Azimuth	
Site	Port Kembla	Elevation	3.268 m	Dimensions	3.00 m x 0.60 m	Mounting	Track	North	
Job Number	30013038	Datum	MGA94 Zone 56/AHD					Survey	

SMEC

Pit Identifier: **TP21**

Method	Casing Support Water (Gain/Loss)	Run (TCR) RQD	Sampling	Testing: Strength SPT, DCP, Is(50) (MPa), PP (UCS kPa), SV (kPa)	Testing: Permeability, Level & Inflow	Depth (m) / Elevation	Graphic Log	Soil Code	Depth / RL	Soil / Rock Material Description	Moisture Condition	Consistency Density	Alteration	Weathering	Rock Strength	Inferred Rock Strength (Point Load Is(50) ● - Axial ○ - Diametral)	Relative Strength Soil-Rock	Defect Spacing (mm)	Visual	Fabric, Structure & Defect Description	Group Defects	Origin, Stratigraphic Unit & General Observations	Installation
EX	No casing used		ES			0.0 / 3.3			3.27	Clayey GRAVEL: angular to sub-rounded, pale grey, with sand throughout.						VL L M H VH EH (-0.1 -0.3 -1 -3 -10)	0	0 2 20 200 2000					CEMENTED SLAG 0.00-0.30: weakly to moderately cemented slag	
									0.30 / 2.97	FILL Clayey GRAVEL: angular to sub-angular, pale grey to black, with cobbles, gravel consisting of mainly coalwash.												FILL 0.30-1.60: coalwash	
			ES			0.5 / 2.8																	0.5
						1.0 / 2.3																	1.0
						1.5 / 1.8			1.60 / 1.67	FILL SAND: coarse grained, with coarse grained sub-angular to sub-rounded gravel, trace fabric.												1.60-2.70: reworked estuarine soil	1.5
			ES																				
						2.0 / 1.3																	2.0
						2.5 / 0.8																	2.5
									2.70 / 0.57	SAND: yellow, trace sub-angular to angular gravel.	M	L										AEOLIAN	
						3.0 / 0.3			3.00	Hole Terminated at 3.00 m												3.00: water ingress	3.0
						3.5 / -0.2																	3.5
						4.0																	

Observations and Comments

Notes

Classifications compliant with AS1726-2017: Geotechnical Site Investigations unless otherwise noted.
Defect Log Abridged. Additional detail in digital dataset. Lugeon: BS5930:1999
For Inclined Holes: Angles reported in defects are apparent dip from core horizontal unless as α or β.
Refer to explanatory notes for SMEC logs for details of abbreviations or basis of description.

Logged By	ED	Date	12/10/2021
Approved By	AW	Date	30/11/2021
Status	3	Page	1 of 1

SMEC 2.10.10 LIB.GLB Log _SMEC HYBRID BOREHOLE LANDSCAPE 30013038 GINT.GPJ <<DrawingFile>> 30/11/2021 16:44 10.02.00.04 Datgel Tools | Lib: SMEC 2.10.9 2021-08-30 Prj: SMEC 2.10.8 2020-08-10

Geological & Engineering Log

Project	Detailed Site Investigation	East	307750.9 m	Start Date	12/10/2021	Contractor	Ledacon Pty Ltd
Client	Manildra Group Pty Ltd	North	6183086.9 m	End Date	12/10/2021	Equipment	13 Tonne Excavator
Site	Port Kembla	Elevation	3.525 m	Dimensions	3.00 m x 0.60 m	Mounting	Track
Job Number	30013038	Datum	MGA94 Zone 56/AHD				

Inclination 90°
Azimuth
North
Survey

SMEC

Pit Identifier: **TP22**

Method	Casing Support Water (Gain/Loss)	Run (TCR) RQD	Sampling	Testing: Strength SPT, DCP, Is(50) (MPa), PP (UCS kPa), SV (kPa)	Testing: Permeability, Level & Inflow	Depth (m) / Elevation	Graphic Log	Soil Code	Depth / RL	Soil / Rock Material Description	Moisture Condition	Consistency Density	Alteration	Weathering	Rock Strength	Inferred Rock Strength (Point Load Is(50) ● - Axial O - Diametral)	Relative Strength Soil-Rock	Defect Spacing (mm)	Visual	Fabric, Structure & Defect Description	Group Defects	Origin, Stratigraphic Unit & General Observations	Installation
EX	No casing used		ES		Not Observed	0.0 / 3.5			3.53	FILL Sandy CLAY: brown, trace rootlets.												FILL	
									0.50														0.5
						0.5 / 3.0			3.03	FILL Clayey GRAVEL: angular to sub-angular, dark grey to black, with cobbles >60mm, gravel consisting of mainly coalwash.												0.50-1.80: coalwash	
			ES			1.0 / 2.5																	1.0
						1.5 / 2.0			1.80														1.5
									1.73	SAND: coarse grained, reddish yellow.	M	L										AEOLIAN	
			ES			2.0 / 1.5			2.30														2.0
										Hole Terminated at 2.30 m													
						2.5 / 1.0																	2.5
						3.0 / 0.5																	3.0
						3.5 / 0.0																	3.5
						4.0																	

Observations and Comments

Notes
Classifications compliant with AS1726-2017: Geotechnical Site Investigations unless otherwise noted.
Defect Log Abridged. Additional detail in digital dataset. Lugeon: BS5930:1999
For Inclined Holes: Angles reported in defects are apparent dip from core horizontal unless as α or β.
Refer to explanatory notes for SMEC logs for details of abbreviations or basis of description.

Logged By	ED	Date	12/10/2021
Approved By	AW	Date	30/11/2021
Status	3	Page	1 of 1

SMEC 2.10.10 UB.GLB Log _SMEC HYBRID BOREHOLE LANDSCAPE 30013038 GINT.GPJ <<DrawingFile>> 30/11/2021 16:44 10.02.00.04 Datgel Tools | Lib: SMEC 2.10.9 2021-08-30 Prj: SMEC 2.10.8 2020-08-10

Geological & Engineering Log

Project	Detailed Site Investigation	East	307728.8 m	Start Date	12/10/2021	Contractor	Ledacon Pty Ltd	Inclination	90°
Client	Manildra Group Pty Ltd	North	6183050.2 m	End Date	12/10/2021	Equipment	13 Tonne Excavator	Azimuth	
Site	Port Kembla	Elevation	3.422 m	Dimensions	3.00 m x 0.60 m	Mounting	Track	North	
Job Number	30013038	Datum	MGA94 Zone 56/AHD					Survey	

SMEC

Pit Identifier: **TP23**

Method	Casing Support Water (Gain/Loss)	Run (TCR) RQD	Sampling	Testing: Strength SPT, DCP, Is(50) (MPa), PP (UCS kPa), SV (kPa)	Testing: Permeability, Level & Inflow	Depth (m) / Elevation	Graphic Log	Soil Code	Depth / RL	Soil / Rock Material Description	Moisture Condition Consistency Density	Alteration	Weathering	Rock Strength	Inferred Rock Strength Point Load Is(50) ● - Axial O - Diametral (VL -0.1, L -0.3, M -1, H -3, VH -10, EH)	Relative Strength Soil-Rock	Defect Spacing (mm) (0, 2, 20, 200, 2000)	Visual	Fabric, Structure & Defect Description	Group Defects	Origin, Stratigraphic Unit & General Observations	Installation
EX	No casing used		ES ES ES		▶	0.0 / 3.4 0.5 / 2.9 1.0 / 2.4 1.5 / 1.9 2.0 / 1.4 2.5 / 0.9 3.0 / 0.4 3.5 / -0.1 4.0			3.42 2.10 1.32 3.00	FILL Clayey GRAVEL: sub-angular to sub-rounded, dark grey to black, low plasticity clay, with cobbles, gravel consisting of mainly coalwash. FILL Clayey SAND: pale brown, low plasticity clay, with bricks, ceramics, sub-angular gravel and sub-rounded cobbles. 2.60 m: concrete foundation pillar, bricks, ceramics Hole Terminated at 3.00 m Termination due to unstable edges											FILL 0.00-2.10: coal wash 3.00: water ingress	0.5 1.0 1.5 2.0 2.5 3.0 3.5

Observations and Comments

Notes
Classifications compliant with AS1726-2017: Geotechnical Site Investigations unless otherwise noted.
Defect Log Abridged. Additional detail in digital dataset. Lugeon: BS5930:1999
For Inclined Holes: Angles reported in defects are apparent dip from core horizontal unless as α or β.
Refer to explanatory notes for SMEC logs for details of abbreviations or basis of description.

Logged By	ED	Date	12/10/2021
Approved By	AW	Date	30/11/2021
Status	3	Page	1 of 1

SMEC 2.10.10 LIB.GLB Log _SMEC HYBRID BOREHOLE LANDSCAPE 30013038 GINT.GPJ <<DrawingFile>> 30/11/2021 16:44 10.02.00.04 Datgel Tools | Lib: SMEC 2.10.9 2021-08-30 Prj: SMEC 2.10.8 2020-08-10

Geological & Engineering Log

Project	Detailed Site Investigation	East	307703.9 m	Start Date	12/10/2021	Contractor	Ledacon Pty Ltd	Inclination	90°
Client	Manildra Group Pty Ltd	North	6183024.1 m	End Date	12/10/2021	Equipment	13 Tonne Excavator	Azimuth	
Site	Port Kembla	Elevation	3.396 m	Dimensions	3.00 m x 0.60 m	Mounting	Track	North	
Job Number	30013038	Datum	MGA94 Zone 56/AHD					Survey	

SMEC

Pit Identifier: **TP24**

Method	Casing Support Water (Gain/Loss)	Run (TCR) RQD	Sampling	Testing: Strength SPT, DCP, Is(50) (MPa), PP (UCS kPa), SV (kPa)	Testing: Permeability, Level & Inflow	Depth (m) / Elevation	Graphic Log	Soil Code	Depth / RL	Soil / Rock Material Description	Moisture Condition Consistency Density	Alteration	Weathering	Rock Strength	Inferred Rock Strength Point Load Is(50) ● - Axial O - Diametral (VL -0.1, L -0.3, M -1, H -3, VH -10, EH)	Relative Strength Soil-Rock	Defect Spacing (mm) (0, 2, 20, 200, 2000)	Visual	Fabric, Structure & Defect Description	Group Defects	Origin, Stratigraphic Unit & General Observations	Installation
EX	No casing used		ES		Not Observed	0.0 / 3.4			3.40	FILL Clayey GRAVEL: sub-angular, red, well rounded nodules, gravel mainly appears well-rounded slag nodules.											FILL	
			ES			0.5 / 2.9				0.80 m: wire rope (~15mm diameter)												0.5
			ES			1.0 / 2.4																1.0
						1.5 / 1.9																1.5
						2.0 / 1.4																2.0
			ES						2.40													
						2.5 / 0.9			2.50	FILL Clayey SAND: pale brown to yellow, trace timber, sub-rounded cobble. Hole Terminated at 2.50 m Termination due to unstable pit												2.5
						3.0 / 0.4																3.0
						3.5 / -0.1																3.5
						4.0																

Observations and Comments

Notes
Classifications compliant with AS1726-2017: Geotechnical Site Investigations unless otherwise noted.
Defect Log Abridged. Additional detail in digital dataset. Lugeon: BS5930:1999
For Inclined Holes: Angles reported in defects are apparent dip from core horizontal unless as α or β.
Refer to explanatory notes for SMEC logs for details of abbreviations or basis of description.

Logged By	ED	Date	12/10/2021
Approved By	AW	Date	30/11/2021
Status	3	Page	1 of 1

SMEC 2.10.10 UB.GLB Log _SMEC HYBRID BOREHOLE LANDSCAPE 30013038 GINT.GPJ <<DrawingFile>> 07/12/2021 09:24 10.02.00.04 Datgel Tools | Lib: SMEC 2.10.9 2021-08-30 Prj: SMEC 2.10.8 2020-08-10

Geological & Engineering Log

Project	Detailed Site Investigation	East	307861.1 m	Start Date	12/10/2021	Contractor	Ledacon Pty Ltd	Inclination	90°
Client	Manildra Group Pty Ltd	North	6183118.8 m	End Date	12/10/2021	Equipment	13 Tonne Excavator	Azimuth	
Site	Port Kembla	Elevation	3.291 m	Dimensions	3.00 m x 0.60 m	Mounting	Track	North	
Job Number	30013038	Datum	MGA94 Zone 56/AHD					Survey	

SMEC

Pit Identifier: **TP25**

Method	Casing Support Water (Gain/Loss)	Run (TCR) RQD	Sampling	Testing: Strength SPT, DCP, Is(50) (MPa), PP (UCS kPa), SV (kPa)	Testing: Permeability, Level & Inflow	Depth (m) / Elevation	Graphic Log	Soil Code	Depth / RL	Soil / Rock Material Description	Moisture Condition	Consistency Density	Alteration	Weathering	Rock Strength	Inferred Rock Strength: Point Load Is(50) ● - Axial ○ - Diametral (VL -0.1, L -0.3, M -1, H -3, VH -10, EH)	Relative Strength Soil-Rock	Defect Spacing (mm) (0, 2, 20, 200, 2000)	Visual	Fabric, Structure & Defect Description	Group Defects	Origin, Stratigraphic Unit & General Observations	Installation
EX	No casing used					0.0 / 3.3			3.29	CEMENTED SLAG: recovered as gravelly sand, pale grey.												CEMENTED SLAG	
									0.30														
			ES						2.99	FILL Clayey SAND: dark brown, with angular gravel, trace rootlets.												FILL	
						0.5 / 2.8			0.50														0.5
									2.79	FILL SAND: coarse grained, yellow with grey laminate throughout, trace rootlets.													
						1.0 / 2.3																	1.0
						1.5 / 1.8																	1.5
						2.0 / 1.3																	2.0
			ES						2.40														
						2.5 / 0.8			0.89	SAND: pale brown to yellow, sub-angular to angular cobbles and rocks.	M	L										AEOLIAN	2.5
									2.80														
			ES						0.49	SAND: orange to yellow.												ESTUARINE?	
						3.0 / 0.3																	3.0
					▶	3.5 / -0.2																3.50: water ingress	3.5
			ES						3.80														
						4.0				Hole Terminated at 3.80 m Termination due to unstable pit													

Observations and Comments

Notes
Classifications compliant with AS1726-2017: Geotechnical Site Investigations unless otherwise noted.
Defect Log Abridged. Additional detail in digital dataset. Lugeon: BS5930:1999
For Inclined Holes: Angles reported in defects are apparent dip from core horizontal unless as α or β.
Refer to explanatory notes for SMEC logs for details of abbreviations or basis of description.

Logged By	ED	Date	12/10/2021
Approved By	AW	Date	30/11/2021
Status	3	Page	1 of 1

SMEC 2.10.10 LIB.GLB Log _SMEC HYBRID BOREHOLE LANDSCAPE 30013038 GINT.GPJ <<DrawingFile>> 30/11/2021 16:44 10.02.00.04 Datgel Tools | Lib: SMEC 2.10.9 2021-08-30 Prj: SMEC 2.10.8 2020-08-10

Geological & Engineering Log

Project	Detailed Site Investigation	East	307878.1 m	Start Date	12/10/2021	Contractor	Ledacon Pty Ltd
Client	Manildra Group Pty Ltd	North	6183041.6 m	End Date	12/10/2021	Equipment	13 Tonne Excavator
Site	Port Kembla	Elevation	2.915 m	Dimensions	3.00 m x 0.60 m	Mounting	Track
Job Number	30013038	Datum	MGA94 Zone 56/AHD				

Inclination 90°
Azimuth
North
Survey

SMEC

Pit Identifier: **TP26**

Method	Casing Support Water (Gain/Loss)	Run (TCR) RQD	Sampling	Testing: Strength SPT, DCP, Is(50) (MPa), PP (UCS kPa), SV (kPa)	Testing: Permeability, Level & Inflow	Depth (m) / Elevation	Graphic Log	Soil Code	Depth / RL	Soil / Rock Material Description	Moisture Condition Consistency Density	Alteration	Weathering	Rock Strength	Inferred Rock Strength Point Load Is(50) ● - Axial O - Diametral (VL -0.1, L -0.3, M -1, H -3, VH -10, EH)	Relative Strength Soil-Rock	Defect Spacing (mm) (0, 2, 20, 200, 2000)	Visual	Fabric, Structure & Defect Description	Group Defects	Origin, Stratigraphic Unit & General Observations	Installation
EX	No casing used				Not Observed	0.0 / 2.9			2.92	CEMENTED SLAG: recovered as gravelly sand, pale grey.											CEMENTED SLAG	
									0.20 / 2.72	FILL Sandy CLAY: low plasticity, dark brown, trace rootlets.											FILL	
			ES			0.5 / 2.4																0.5
						1.0 / 1.9			1.00 / 1.92	FILL Clayey SAND: pale brown to orange, with angular to sub-rounded gravel, lenses of coal wash throughout.												1.0
						1.5 / 1.4																1.5
			ES			2.0 / 0.9																2.0
			ES						2.40													
						2.5 / 0.4				Hole Terminated at 2.40 m												2.5
						3.0 / -0.1																3.0
						3.5 / -0.6																3.5
						4.0																

Observations and Comments

Notes
Classifications compliant with AS1726-2017: Geotechnical Site Investigations unless otherwise noted.
Defect Log Abridged. Additional detail in digital dataset. Lugeon: BS5930:1999
For Inclined Holes: Angles reported in defects are apparent dip from core horizontal unless as α or β.
Refer to explanatory notes for SMEC logs for details of abbreviations or basis of description.

Logged By	ED	Date	12/10/2021
Approved By	AW	Date	30/11/2021
Status	3	Page	1 of 1

SMEC 2.10.10 LIB.GLB Log _SMEC HYBRID BOREHOLE LANDSCAPE 30013038 GINT.GPJ <<DrawingFile>> 30/11/2021 16:44 10.02.00.04 Datgel Tools | Lib: SMEC 2.10.9 2021-08-30 Prj: SMEC 2.10.8 2020-08-10

Geological & Engineering Log

Project	Detailed Site Investigation	East	307782.3 m	Start Date	12/10/2021	Contractor	Ledacon Pty Ltd	Inclination	90°
Client	Manildra Group Pty Ltd	North	6183079.2 m	End Date	12/10/2021	Equipment	13 Tonne Excavator	Azimuth	
Site	Port Kembla	Elevation	3.045 m	Dimensions	3.00 m x 0.60 m	Mounting	Track	North	
Job Number	30013038	Datum	MGA94 Zone 56/AHD					Survey	

SMEC

Pit Identifier: **TP27**

Method	Casing Support Water (Gain/Loss)	Run (TCR) RQD	Sampling	Testing: Strength SPT, DCP, Is(50) (MPa), PP (UCS kPa), SV (kPa)	Testing: Permeability, Level & Inflow	Depth (m) / Elevation	Graphic Log	Soil Code	Depth RL	Soil / Rock Material Description	Moisture Condition	Consistency Density	Alteration	Weathering	Rock Strength	Inferred Rock Strength Point Load Is(50) ● - Axial ○ - Diametral (VL -0.1, L -0.3, M -1, H -3, VH -10, EH)	Relative Strength Soil-Rock	Defect Spacing (mm) (0, 2, 20, 200, 2000)	Visual	Fabric, Structure & Defect Description	Group Defects	Origin, Stratigraphic Unit & General Observations	Installation
EX	No casing used		ES			0.0 / 3.0			3.05	FILL Silty CLAY: dark brown, with rootlets.												FILL	
									0.20 / 2.85	FILL Sandy CLAY: brown, with cobbles and boulders (200-600mm), trace foreign materials (metal rope, timber, rubber) and fibre cement fragments (suspected ACM).												0.20-1.00: ACM fibre cement fragment observed in good condition, approx. three fragments of length 60-80mm	
						0.5 / 2.5																	0.5
			ES			1.0 / 2.0																	1.0
			ES			1.5 / 1.5				1.50 m: increase in boulders, metal rope found												1.30: ACM fibre cement fragment observed in good condition, single, length 40mm	1.5
									1.80 / 1.25	SAND: pale brown to orange and yellow.	M	L										AEOLIAN	
						2.0 / 1.0																	2.0
			ES						2.50 / 0.55	Clayey SAND: black.												ESTUARINE?	2.5
			ES		▶	2.5 / 0.5			2.80		W											2.70: water ingress	
									2.90 / 0.15	Clayey SAND: pale brown to pale yellow. SAND: yellow.													
						3.0 / 0.0			3.40														3.0
						3.5 / -0.5				Hole Terminated at 3.40 m													3.5
						4.0																	

Observations and Comments
more evidence of boulders deeper in the pit

Notes
Classifications compliant with AS1726-2017: Geotechnical Site Investigations unless otherwise noted.
Defect Log Abridged. Additional detail in digital dataset. Lugeon: BS5930:1999
For Inclined Holes: Angles reported in defects are apparent dip from core horizontal unless as α or β.
Refer to explanatory notes for SMEC logs for details of abbreviations or basis of description.

Logged By	ED	Date	12/10/2021
Approved By	AW	Date	30/11/2021
Status	3	Page	1 of 1

SMEC 2.10.10 UB.GLB Log _SMEC HYBRID BOREHOLE LANDSCAPE 30013038 GINT.GPJ <<DrawingFile>> 30/11/2021 16:44 10.02.00.04 Datgel Tools | Lib: SMEC 2.10.9 2021-08-30 Prj: SMEC 2.10.8 2020-08-10

Geological & Engineering Log

Project	Pipeline Route TSI	East	308214.660 m	Start Date	29/03/2022	Contractor	Epoca
Client	Manildra Group	North	6183259.600 m	End Date	29/03/2022	Rig Type	Geoprobe 7822DT
Site	Port Kembla	Elevation	4.140 m			Mounting	Track
Job No	30013174	Datum	MGA94 Zone 56/AHD				

Inclination 90°
Azimuth
North
Survey

SMEC
Member of the Surbana Jurong Group

Borehole Identifier: **BH01**

Method	Casing	Support	Water (Gain/Loss)	Run (TCR)	Sampling	Testing: SPT	Testing: PP (kPa) VS (kPa) Peak / Remoulded PID (ppm)	Testing: DCP	Water Level & Inflow	Depth (m) / Elevation	Graphic Log	Soil Code	Depth / RL	Soil / Rock Material Description	Moisture Condition	Consistency Density	Alteration	Weathering	Rock Strength	Origin, Stratigraphic Unit & General Observations	Installation
										0.0 / 4.1			4.14	ASPHALT: dark grey, black.						ASPHALT	
													0.10 / 4.04	FILL Gravelly SAND: medium grained, angular to sub-angular, dark brown.						FILL (ROADBASE)	
					ES		0.20m PID= 5.1ppm			0.2 / 3.9											0.2
										0.4 / 3.7											0.4
														0.50: orange film (plastic)							
										0.6 / 3.5											0.6
													0.70 / 3.44	FILL Clayey SAND: medium grained, pale brown, grey, trace gravel.						FILL	
					ES		0.80m PID= 4.3ppm		Not Observed	0.8 / 3.3											0.8
										1.0 / 3.1											1.0
										1.2 / 2.9											1.2
					ES		1.40m PID= 3.9ppm			1.4 / 2.7				1.40: sand is getting coarser (orange)							1.4
										1.6 / 2.5											1.6
										1.8 / 2.3											1.8
													1.95	Hole Terminated at 1.95 m Refusal on suspected boulder							
										2.0											

Observations and Comments

Notes
Classifications compliant with AS1726-2017: Geotechnical Site Investigations unless otherwise noted.
Defect Log Abridged. Additional detail in digital dataset. Lugeon: BS5930:1999
For Inclined Holes: Angles reported in defects are apparent dip from core horizontal unless as α or β.
Refer to explanatory notes for SMEC logs for details of abbreviations or basis of description.

Logged By	ED	Date	29/03/2022
Approved By	AW	Date	27/04/2022
Status	3	Page	1 of 1

SMEC 2.10.13 LIB.GLB Log _SMEC HYBRID LOG LANDSCAPE_SOIL SMEC ENV WOL 30013174.GPJ <<DrawingFile>> 29/04/2022 17:43 10.02.00.04 Datgel Tools | Lib: SMEC 2.10.9 2021-08-30 Prj: SMEC 2.10.8 2020-09-10

Geological & Engineering Log

Project	Pipeline Route TSI	East	308216.380 m	Start Date	04/05/2022	Contractor	Epoca
Client	Manildra Group	North	6183215.660 m	End Date	04/05/2022	Rig Type	Geoprobe 7822DT
Site	Port Kembla	Elevation	4.260 m			Mounting	Track
Job No	30013174	Datum	MGA94 Zone 56/AHD				

Inclination 90°
Azimuth
North
Survey

SMEC
Member of the Surbana Jurong Group

Borehole Identifier: **BH02**

Method	Casing	Support	Water (Gain/Loss)	Run (TCR)	Sampling	Testing: SPT	Testing: PP (kPa) VS (kPa) Peak / Remoulded PID (ppm)	Testing: DCP	Water Level & Inflow	Depth (m) Elevation	Graphic Log	Soil Code	Depth RL	Soil / Rock Material Description	Moisture Condition	Consistency Density	Alteration	Weathering	Rock Strength	Origin, Stratigraphic Unit & General Observations	Installation
										0.0 / 4.3			4.26	ASPHALT: black, cemented.						ASPHALT	
					ES		0.10m PID= 8.9ppm						0.10 / 4.16	FILL Silty SAND: fine to medium grained, dark grey, with angular to sub-angular gravel, moist.						FILL	
										0.2 / 4.1			0.30 / 3.96	FILL Gravelly SAND: fine to medium grained, brown, sub-angular gravel, with clay.							0.2
					ES		0.40m PID= 12.6ppm		Not Observed	0.4 / 3.9											0.4
										0.6 / 3.7				0.70-0.80: less gravelly							0.6
										0.8 / 3.5			0.80 / 3.46	FILL Gravelly Silty SAND: fine grained, pale brown, medium grained gravel.							0.8
					ES		0.90m PID= 11.2ppm			1.0 / 3.3											1.0
													1.20								1.2
										1.2 / 3.1				Hole Terminated at 1.20 m Refusal on suspected boulder							
										1.4 / 2.9											1.4
										1.6 / 2.7											1.6
										1.8 / 2.5											1.8
										2.0											

Observations and Comments

Notes
Classifications compliant with AS1726-2017: Geotechnical Site Investigations unless otherwise noted.
Defect Log Abridged. Additional detail in digital dataset. Lugeon: BS5930:1999
For Inclined Holes: Angles reported in defects are apparent dip from core horizontal unless as α or β.
Refer to explanatory notes for SMEC logs for details of abbreviations or basis of description.

Logged By	ED	Date	04/05/2022
Approved By	AW	Date	27/04/2022
Status	3	Page	1 of 1

SMEC 2.10.13 UB.GLB Log _SMEC HYBRID LOG LANDSCAPE_SOIL SMEC ENV WOL 30013174.GPJ <<DrawingFile>> 29/04/2022 17:43 10.02.00.04 Datgel Tools | Lib: SMEC 2.10.9 2021-08-30 Prj: SMEC 2.10.8 2020-09-10

Geological & Engineering Log

Project	Pipeline Route TSI	East	308171.590 m	Start Date	04/05/2022	Contractor	Epoca
Client	Manildra Group	North	6183159.600 m	End Date	04/05/2022	Rig Type	Geoprobe 7822DT
Site	Port Kembla	Elevation	3.750 m			Mounting	Track
Job No	30013174	Datum	MGA94 Zone 56/AHD				

Inclination 90°
Azimuth
North
Survey

SMEC
Member of the Surbana Jurong Group

Borehole Identifier: **BH03**

Method	Casing	Support	Water (Gain/Loss)	Run (TCR)	Sampling	Testing: SPT	Testing: PP (kPa) VS (kPa) Peak / Remoulded PID (ppm)	Testing: DCP	Water Level & Inflow	Depth (m) / Elevation	Graphic Log	Soil Code	Depth / RL	Soil / Rock Material Description	Moisture Condition	Consistency Density	Alteration	Weathering	Rock Strength	Origin, Stratigraphic Unit & General Observations	Installation
										0.0 / 3.8			3.75	FILL Silty CLAY: medium plasticity, dark brown, with gravel, trace rootlets, moist, soft.						FILL (TOPSOIL)	
					ES		0.10m PID= 9.1ppm														
										0.2 / 3.6											0.2
														0.30: timber (possibly sleeper)							
										0.4 / 3.4											0.4
										0.6 / 3.2			0.60 / 3.15	FILL GRAVEL: fine to medium grained, dark grey-black, with mulch, moist.						FILL (COALWASH)	0.6
					ES		0.60m PID= 6.3ppm														
					ES		0.70m PID= 9.4ppm							0.70-0.80: thin layer of clayey sand							
									Not Observed	0.8 / 3.0											0.8
										1.0 / 2.8											1.0
										1.2 / 2.6			1.20 / 2.55	FILL Sandy CLAY: medium plasticity, brownish orange, moist, sand is coarse grained, with angular to sub-angular gravel.						FILL	1.2
					ES		1.40m PID= 12.9ppm			1.4 / 2.4											1.4
										1.6 / 2.2											1.6
										1.8 / 2.0											1.8
										2.0				Hole Terminated at 2.00 m Target depth							

Observations and Comments

Notes
Classifications compliant with AS1726-2017: Geotechnical Site Investigations unless otherwise noted.
Defect Log Abridged. Additional detail in digital dataset. Lugeon: BS5930:1999
For Inclined Holes: Angles reported in defects are apparent dip from core horizontal unless as α or β.
Refer to explanatory notes for SMEC logs for details of abbreviations or basis of description.

Logged By	ED	Date	04/05/2022
Approved By	AW	Date	27/04/2022
Status	3	Page	1 of 1

SMEC 2.10.13 LIB.GLB Log _SMEC HYBRID LOG LANDSCAPE_SOIL SMEC ENV WOL 30013174.GPJ <<DrawingFile>> 29/04/2022 17:43 10.02.00.04 Datgel Tools | Lib: SMEC 2.10.9 2021-08-30 Prj: SMEC 2.10.8 2020-09-10

Geological & Engineering Log

Project	Pipeline Route TSI	East		Start Date	04/05/2022	Contractor	Epoca
Client	Manildra Group	North		End Date	04/05/2022	Rig Type	Geoprobe 7822DT
Site	Port Kembla	Elevation				Mounting	Track
Job No	30013174	Datum	MGA94 Zone 56/AHD				

Inclination 90°
Azimuth
North
Survey NOT SURVEYED

SMEC
Member of the Surbana Jurong Group

Borehole Identifier: **BH03A**

Method	Casing	Support	Water (Gain/Loss)	Run (TCR)	Sampling	Testing: SPT	Testing: PP (kPa) VS (kPa) Peak / Remoulded PID (ppm)	Testing: DCP	Water Level & Inflow	Depth (m) Elevation	Graphic Log	Soil Code	Depth RL	Soil / Rock Material Description	Moisture Condition	Consistency Density	Alteration	Weathering	Rock Strength	Origin, Stratigraphic Unit & General Observations	Installation
										0.0			0.06	ASPHALT: dark grey, cemented.						ASPHALT	
					ES		0.10m PID= 5.2ppm		Not Observed	0.2			0.40	FILL Sandy CLAY: low plasticity, dark brown-brown, with angular to sub-angular gravel, moist.						FILL	0.2
					ES		0.40m PID= 8.2ppm			0.4				Hole Terminated at 0.40 m Refusal on suspected concrete slab							0.4
										0.6											0.6
										0.8											0.8
										1.0											1.0
										1.2											1.2
										1.4											1.4
										1.6											1.6
										1.8											1.8
										2.0											

Observations and Comments
Moved hole to alternate location BH03

Notes
Classifications compliant with AS1726-2017: Geotechnical Site Investigations unless otherwise noted.
Defect Log Abridged. Additional detail in digital dataset. Lugeon: BS5930:1999
For Inclined Holes: Angles reported in defects are apparent dip from core horizontal unless as α or β.
Refer to explanatory notes for SMEC logs for details of abbreviations or basis of description.

Logged By	ED	Date	04/05/2022
Approved By	AW	Date	27/04/2022
Status	3	Page	1 of 1

SMEC 2.10.13 UB.GLB Log _SMEC HYBRID LOG LANDSCAPE_SOIL SMEC ENV WOL 30013174.GPJ <<DrawingFile>> 29/04/2022 17:43 10.02.00.04 Datgel Tools | Lib: SMEC 2.10.9 2021-08-30 Prj: SMEC 2.10.8 2020-09-10

Geological & Engineering Log

Project	Pipeline Route TSI	East	308145.200 m	Start Date	04/05/2022	Contractor	Epoca
Client	Manildra Group	North	6183136.000 m	End Date	04/05/2022	Rig Type	Geoprobe 7822DT
Site	Port Kembla	Elevation	3.740 m			Mounting	Track
Job No	30013174	Datum	MGA94 Zone 56/AHD				

Inclination 90°
Azimuth
North
Survey

SMEC
Member of the Surbana Jurong Group

Borehole Identifier: **BH04**

Method	Casing	Support	Water (Gain/Loss)	Run (TCR)	Sampling	Testing: SPT	Testing: PP (kPa) VS (kPa) Peak / Remoulded PID (ppm)	Testing: DCP	Water Level & Inflow	Depth (m) / Elevation	Graphic Log	Soil Code	Depth / RL	Soil / Rock Material Description	Moisture Condition	Consistency Density	Alteration	Weathering	Rock Strength	Origin, Stratigraphic Unit & General Observations	Installation
										0.0 / 3.7			0.05 / 3.69	FILL SLAG: dark grey, loosely cemented.						FILL (CEMENTED SLAG)	
														FILL Clayey SAND: dark grey, with angular to sub-angular gravel, with coalwash throughout, moist.						FILL	
					ES		0.10m PID= 4ppm														
										0.2 / 3.5											0.2
													0.30 / 3.44	FILL GRAVEL: fine to medium grained, black, with angular to sub-angular gravel, trace sand, moist.						FILL (COALWASH)	
										0.4 / 3.3											0.4
					ES		0.50m PID= 8.6ppm		Not Observed												
										0.6 / 3.1											0.6
													0.70 / 3.04	FILL Silty SAND: fine to medium grained, black, with coalwash, with angular to sub-angular gravel, moist.						FILL	
										0.8 / 2.9											0.8
										1.0 / 2.7											1.0
													1.10	Hole Terminated at 1.10 m Refusal on suspected boulder							
										1.2 / 2.5											1.2
										1.4 / 2.3											1.4
										1.6 / 2.1											1.6
										1.8 / 1.9											1.8
										2.0											

Observations and Comments

Notes
Classifications compliant with AS1726-2017: Geotechnical Site Investigations unless otherwise noted.
Defect Log Abridged. Additional detail in digital dataset. Lugeon: BS5930:1999
For Inclined Holes: Angles reported in defects are apparent dip from core horizontal unless as α or β.
Refer to explanatory notes for SMEC logs for details of abbreviations or basis of description.

Logged By	ED	Date	04/05/2022
Approved By	AW	Date	27/04/2022
Status	3	Page	1 of 1

SMEC 2.10.13 UB.GLB Log _SMEC HYBRID LOG LANDSCAPE_SOIL SMEC ENV WOL 30013174.GPJ <<DrawingFile>> 29/04/2022 17:43 10.02.00.04 Datgel Tools | Lib: SMEC 2.10.9 2021-08-30 Prj: SMEC 2.10.8 2020-09-10

Geological & Engineering Log

Project	Pipeline Route TSI	East	308105.270 m	Start Date	04/05/2022	Contractor	Epoca
Client	Manildra Group	North	6183148.440 m	End Date	04/05/2022	Rig Type	Geoprobe 7822DT
Site	Port Kembla	Elevation	3.360 m			Mounting	Track
Job No	30013174	Datum	MGA94 Zone 56/AHD				

Inclination 90°
Azimuth
North
Survey

SMEC
Member of the Surbana Jurong Group

Borehole Identifier: **BH05**

Method	Casing	Support	Water (Gain/Loss)	Run (TCR)	Sampling	Testing: SPT	Testing: PP (kPa) VS (kPa) Peak / Remoulded PID (ppm)	Testing: DCP	Water Level & Inflow	Depth (m) *Elevation*	Graphic Log	Soil Code	Depth *RL*	Soil / Rock Material Description	Moisture Condition	Consistency Density	Alteration	Weathering	Rock Strength	Origin, Stratigraphic Unit & General Observations	Installation
					ES		0.00m PID= 7.2ppm		Not Observed	0.0 *3.4*			*3.36*	FILL Silty CLAY: dark brown, with sand, trace rootlets and sandstone gravel.						FILL (TOPSOIL)	
										0.2 *3.2*											0.2
					ES		0.40m PID= 9.3ppm			0.4 *3.0*			0.40 *2.96*	FILL Clayey SAND: brown, with sandstone gravel (rounded to sub-rounded).						FILL	0.4
										0.6 *2.8*											0.6
										0.8 *2.6*											0.8
										1.0 *2.4*				1.00: boulders encountered							1.0
										1.2 *2.2*											1.2
					ES		1.40m PID= 8.4ppm			1.4 *2.0*											1.4
										1.6 *1.8*											1.6
					ES		1.80m PID= 11.3ppm			1.8 *1.6*			1.90								1.8
										2.0				Hole Terminated at 1.90 m Refusal on suspected boulder							

Observations and Comments

Notes
Classifications compliant with AS1726-2017: Geotechnical Site Investigations unless otherwise noted.
Defect Log Abridged. Additional detail in digital dataset. Lugeon: BS5930:1999
For Inclined Holes: Angles reported in defects are apparent dip from core horizontal unless as α or β.
Refer to explanatory notes for SMEC logs for details of abbreviations or basis of description.

Logged By	ED	Date	04/05/2022
Approved By	AW	Date	27/04/2022
Status	3	Page	1 of 1

SMEC 2.10.13 UB.GLB Log _SMEC HYBRID LOG LANDSCAPE_SOIL SMEC ENV WOL 30013174.GPJ <<DrawingFile>> 29/04/2022 17:43 10.02.00.04 Datgel Tools | Lib: SMEC 2.10.9 2021-08-30 Prj: SMEC 2.10.8 2020-09-10

Geological & Engineering Log

Project	Pipeline Route TSI	East	308064.610 m	Start Date	04/04/2022	Contractor	Ledacon
Client	Manildra Group	North	6183145.310 m	End Date	04/04/2022	Rig Type	6.5T 300mm Bucket
Site	Port Kembla	Elevation	3.420 m			Mounting	
Job No	30013174	Datum	MGA94 Zone 56/AHD				

Inclination	90°
Azimuth	
North	
Survey	

SMEC
Member of the Surbana Jurong Group

Borehole Identifier: **BH06**

Method	Casing	Support	Water (Gain/Loss)	Run (TCR)	Sampling	Testing: SPT	Testing: PP (kPa) VS (kPa) Peak / Remoulded PID (ppm)	Testing: DCP	Water Level & Inflow	Depth (m) *Elevation*	Graphic Log	Soil Code	Depth *RL*	Soil / Rock Material Description	Moisture Condition	Consistency Density	Alteration	Weathering	Rock Strength	Origin, Stratigraphic Unit & General Observations	Installation
										0.0 *3.4*			*3.42*	0.00: shell fragments and dried grass on surface FILL Sandy CLAY: dark brown, with angular to sub-angular gravel.						FILL	
					ES		0.10m PID= 1.7ppm														
										0.2 *3.2*											0.2
					ES		0.40m PID= 1.9ppm			0.4 *3.0*											0.4
													0.50 *2.92*	FILL Clayey SAND: coarse grained, reddish brown, with minor coalwash.							
										0.6 *2.8*											0.6
					ES		0.70m PID= 1.1ppm							0.70: yellow hollow pipe encountered							
										0.8 *2.6*			0.80 *2.62*	FILL Clayey SAND: medium grained, pale grey-brown.							0.8
					ES		0.90m PID= 2.9ppm		Not Observed				0.90 *2.52*	FILL GRAVEL: fine to medium grained, black, shiny, trace green gravel.						FILL (COALWASH)	
										1.0 *2.4*				1.00: metal cable (appox 30mm in diameter)							1.0
					ES		1.10m PID= 2.3ppm							1.10: boulder encountered (500mm)							
										1.2 *2.2*											1.2
										1.4 *2.0*				1.40: metal railway plate							1.4
										1.6 *1.8*											1.6
					ES		1.70m PID= 3.6ppm						1.80								
										1.8 *1.6*				Hole Terminated at 1.80 m Refusal on boulders							1.8
										2.0											

Observations and Comments

Notes
Classifications compliant with AS1726-2017: Geotechnical Site Investigations unless otherwise noted.
Defect Log Abridged. Additional detail in digital dataset. Lugeon: BS5930:1999
For Inclined Holes: Angles reported in defects are apparent dip from core horizontal unless as α or β.
Refer to explanatory notes for SMEC logs for details of abbreviations or basis of description.

Logged By	ED	Date	04/04/2022
Approved By	AW	Date	27/04/2022
Status	3	Page	1 of 1

SMEC 2.10.13 LIB.GLB Log _SMEC HYBRID LOG LANDSCAPE_SOIL SMEC ENV WOL 30013174.GPJ <<DrawingFile>> 29/04/2022 17:43 10.02.00.04 Datgel Tools | Lib: SMEC 2.10.9 2021-08-30 Prj: SMEC 2.10.8 2020-09-10

Geological & Engineering Log

Project	Pipeline Route TSI	East	308029.280 m	Start Date	04/04/2022	Contractor	Ledacon
Client	Manildra Group	North	6183130.770 m	End Date	04/04/2022	Rig Type	6.5T 300mm Bucket
Site	Port Kembla	Elevation	2.850 m			Mounting	
Job No	30013174	Datum	MGA94 Zone 56/AHD				

Inclination 90°
Azimuth
North
Survey

SMEC
Member of the Surbana Jurong Group

Borehole Identifier: **BH07**

Method	Casing	Support	Water (Gain/Loss)	Run (TCR)	Sampling	Testing: SPT	Testing: PP (kPa) VS (kPa) Peak / Remoulded PID (ppm)	Testing: DCP	Water Level & Inflow	Depth (m) Elevation	Graphic Log	Soil Code	Depth RL	Soil / Rock Material Description	Moisture Condition	Consistency Density	Alteration	Weathering	Rock Strength	Origin, Stratigraphic Unit & General Observations	Installation
										0.0 / 2.9			2.85	FILL Silty SAND: medium grained, dark brown-brown, rootlets.						FILL (TOPSOIL)	
					ES		0.10m PID= 1.6ppm														
										0.2 / 2.7			0.20 / 2.65	FILL Sandy CLAY: low plasticity, dark brown, black, moist, soft.						FILL	0.2
					ES		0.20m PID= 2.8ppm														
									Not Observed	0.4 / 2.5			0.40 / 2.45	FILL Clayey SAND: medium grained, brown, angular to sub-angular gravel.							0.4
										0.6 / 2.3				0.60: cobbles encountered, shell fragments							0.6
										0.8 / 2.1											0.8
					ES		0.90m PID= 2.9ppm						1.00								
										1.0 / 1.9				Hole Terminated at 1.00 m Target depth							1.0
										1.2 / 1.7											1.2
										1.4 / 1.5											1.4
										1.6 / 1.3											1.6
										1.8 / 1.1											1.8
										2.0											

Observations and Comments

Notes
Classifications compliant with AS1726-2017: Geotechnical Site Investigations unless otherwise noted.
Defect Log Abridged. Additional detail in digital dataset. Lugeon: BS5930:1999
For Inclined Holes: Angles reported in defects are apparent dip from core horizontal unless as α or β.
Refer to explanatory notes for SMEC logs for details of abbreviations or basis of description.

Logged By	ED	Date	04/04/2022
Approved By	AW	Date	27/04/2022
Status	3	Page	1 of 1

SMEC 2.10.13 UB.GLB Log _SMEC HYBRID LOG LANDSCAPE_SOIL SMEC ENV WOL 30013174.GPJ <<DrawingFile>> 29/04/2022 17:43 10.02.00.04 Datgel Tools | Lib: SMEC 2.10.9 2021-08-30 Prj: SMEC 2.10.8 2020-09-10

Geological & Engineering Log

Project	Pipeline Route TSI	East	307971.640 m	Start Date	04/04/2022	Contractor	Ledacon	Inclination	90°
Client	Manildra Group	North	6183118.080 m	End Date	04/04/2022	Rig Type	6.5T 300mm Bucket	Azimuth	
Site	Port Kembla	Elevation	2.760 m			Mounting		North	
Job No	30013174	Datum	MGA94 Zone 56/AHD					Survey	

SMEC
Member of the Surbana Jurong Group

Borehole Identifier: **BH08**

Method	Casing	Support	Water (Gain/Loss)	Run (TCR)	Sampling	Testing: SPT	Testing: PP (kPa) VS (kPa) Peak / Remoulded PID (ppm)	Testing: DCP	Water Level & Inflow	Depth (m) *Elevation*	Graphic Log	Soil Code	Depth *RL*	Soil / Rock Material Description	Moisture Condition	Consistency Density	Alteration	Weathering	Rock Strength	Origin, Stratigraphic Unit & General Observations	Installation
					ES		0.00m PID= 4.3ppm		Not Observed	0.0 *2.8*			2.76	FILL Sandy CLAY: low plasticity, dark brown, moist, with angular to sub-angular gravel, cobbles (100mm).						FILL 0.00: ACM fragments observed on surface	
										0.2 *2.6*										0.20-0.40: ACM fragments in northern wall of pit	0.2
					ES		0.30m PID= 4.8ppm													0.35: ACM in pit	
					ES		0.40m PID= 2.7ppm			0.4 *2.4*										0.40: ACM in pit, glass fragments	0.4
																				0.50: nylon rope	
										0.6 *2.2*											0.6
										0.8 *2.0*			0.95								0.8
										1.0 *1.8*				Hole Terminated at 0.95 m Refusal on boulders							1.0
										1.2 *1.6*											1.2
										1.4 *1.4*											1.4
										1.6 *1.2*											1.6
										1.8 *1.0*											1.8
										2.0											

Observations and Comments

Notes
Classifications compliant with AS1726-2017: Geotechnical Site Investigations unless otherwise noted.
Defect Log Abridged. Additional detail in digital dataset. Lugeon: BS5930:1999
For Inclined Holes: Angles reported in defects are apparent dip from core horizontal unless as α or β.
Refer to explanatory notes for SMEC logs for details of abbreviations or basis of description.

Logged By	ED	Date	04/04/2022
Approved By	AW	Date	27/04/2022
Status	3	Page	1 of 1

SMEC 2.10.13 LIB.GLB Log _SMEC HYBRID LOG LANDSCAPE_SOIL SMEC ENV WOL 30013174.GPJ <<DrawingFile>> 29/04/2022 17:43 10.02.00.04 Datgel Tools | Lib: SMEC 2.10.9 2021-08-30 Prj: SMEC 2.10.8 2020-09-10

Geological & Engineering Log

Project	Pipeline Route TSI	East		Start Date 04/04/2022	Contractor Ledacon	Inclination 90°
Client	Manildra Group	North		End Date 04/04/2022	Rig Type 6.5T 300mm Bucket	Azimuth
Site	Port Kembla	Elevation			Mounting	North
Job No	30013174	Datum	MGA94 Zone 56/AHD			Survey NOT SURVEYED

SMEC
Member of the Surbana Jurong Group

Borehole Identifier: **BH09**

Method	Casing	Support	Water (Gain/Loss)	Run (TCR)	Sampling	Testing: SPT	Testing: PP (kPa) VS (kPa) Peak / Remoulded PID (ppm)	Testing: DCP	Water Level & Inflow	Depth (m) Elevation	Graphic Log	Soil Code	Depth RL	Soil / Rock Material Description	Moisture Condition	Consistency Density	Alteration	Weathering	Rock Strength	Origin, Stratigraphic Unit & General Observations	Installation
										0.0				FILL Silty SAND: medium to coarse grained, brown, with rootlets.						FILL (TOPSOIL)	
					ES		0.10m PID= 0.9ppm						0.20								
					ES		0.20m PID= 2.1ppm			0.2				FILL Silty Clayey SAND: black, with boulders (500mm).						FILL	0.2
									Not Observed	0.4				0.40: with angular to sub-angular gravel							0.4
										0.6											0.6
										0.8				0.80: more boulders and cobbles							0.8
					ES		0.90m PID= 1.9ppm						1.00								
										1.0				Hole Terminated at 1.00 m Target depth							1.0
										1.2											1.2
										1.4											1.4
										1.6											1.6
										1.8											1.8
										2.0											

Observations and Comments

Notes
Classifications compliant with AS1726-2017: Geotechnical Site Investigations unless otherwise noted.
Defect Log Abridged. Additional detail in digital dataset. Lugeon: BS5930:1999
For Inclined Holes: Angles reported in defects are apparent dip from core horizontal unless as α or β.
Refer to explanatory notes for SMEC logs for details of abbreviations or basis of description.

Logged By	ED	Date	04/04/2022
Approved By	AW	Date	27/04/2022
Status	3	Page	1 of 1

SMEC 2.10.13 UB.GLB Log _SMEC HYBRID LOG LANDSCAPE_SOIL SMEC ENV WOL 30013174.GPJ <<DrawingFile>> 29/04/2022 17:43 10.02.00.04 Datgel Tools | Lib: SMEC 2.10.9 2021-08-30 Prj: SMEC 2.10.8 2020-09-10

Geological & Engineering Log

Project	Pipeline Route TSI	East	307771.690 m	Start Date	03/03/2021	Contractor	Numac
Client	Manildra Group	North	6183048.650 m	End Date	03/03/2021	Rig Type	Comacchio 205
Site	Port Kembla	Elevation	2.570 m			Mounting	Track
Job No	30013174	Datum	MGA94 Zone 56/AHD				

Inclination 90°
Azimuth
North
Survey

SMEC
Member of the Surbana Jurong Group

Borehole Identifier: **SMW01**

Method: ADT, WB
Casing: Steel Casing - HW (114.3 mm)
Water Level & Inflow: 03/03/21

Depth (m) / Elevation	Graphic Log	Soil Code	Depth / RL	Soil / Rock Material Description	Moisture Condition	Consistency Density	Origin, Stratigraphic Unit & General Observations
0.0 / 2.6			2.57	FILL GRAVEL: fine to medium grained, angular, pale grey, grey.			FILL (CEMENTED SLAG)
			0.20 / 2.37	FILL Gravelly CLAY trace cobbles: medium plasticity, dark grey, dark brown, gravel is fine to coarse grained, angular, iron slag.			FILL
			0.50 / 2.07	FILL Sandy GRAVEL with clay: fine to coarse grained, poorly graded, brown, gravel is iron slag, sand is medium to coarse grained.			
1.0 / 1.6							
2.0 / 0.6		SC	2.00 / 0.57	Clayey SAND clay: fine to coarse grained, dark grey, black, material smelling of hydrocarbons.	M	L - MD	ESTUARINE?
		SP	2.50 / 0.07	SAND: fine to coarse grained, pale grey, grey, slight hydrocarbon odour.	W		
3.0 / -0.4							
4.0 / -1.4			4.50	Hole Terminated at 4.50 m Target depth			
5.0							

Testing: SPT; PP (kPa) / VS (kPa) / PID (ppm) Peak / Remoulded; DCP

Support, Water (Gain/Loss), Run (TCR), Sampling, Alteration, Weathering, Rock Strength

Installation: WELL01; 1.0, 1.5, 2.0, 3.0, 4.0, 4.5

Observations and Comments

Possible hydrocarbon contaminants encountered at 2-2.5m.
Protecive steel monument cemented in place, 0.73m stick up above surface level.

Notes

Classifications compliant with AS1726-2017: Geotechnical Site Investigations unless otherwise noted.
Defect Log Abridged. Additional detail in digital dataset. Lugeon: BS5930:1999
For Inclined Holes: Angles reported in defects are apparent dip from core horizontal unless as α or β.
Refer to explanatory notes for SMEC logs for details of abbreviations or basis of description.

Logged By	TH	Date	03/03/2021
Approved By	SRM	Date	31/03/2021
Status	3	Page	1 of 1

SMEC 2.10.13 UB.GLB Log _SMEC HYBRID LOG LANDSCAPE_SOIL SMEC ENV WOL 30013174.GPJ <<DrawingFile>> 27/04/2022 16:28 10.02.00.04 Datgel Tools | Lib: SMEC 2.10.9 2021-08-30 Prj: SMEC 2.10.8 2020-09-10

Geological & Engineering Log

Project	Pipeline Route TSI	East	307889.380 m	Start Date	04/06/2022	Contractor	Epoca
Client	Manildra Group	North	6183043.420 m	End Date	04/06/2022	Rig Type	Geoprobe 7822DT
Site	Port Kembla	Elevation	2.890 m			Mounting	
Job No	30013174	Datum	MGA94 Zone 56/AHD				

Inclination 90°
Azimuth
North
Survey

SMEC
Member of the Surbana Jurong Group

Borehole Identifier: **SMW02**

Method	Casing	Support	Water (Gain/Loss)	Run (TCR)	Sampling	Testing: SPT	Testing: PP (kPa) VS (kPa) Peak / Remoulded PID (ppm)	Testing: DCP	Water Level & Inflow	Depth (m) Elevation	Graphic Log	Soil Code	Depth RL	Soil / Rock Material Description	Moisture Condition	Consistency Density	Alteration	Weathering	Rock Strength	Origin, Stratigraphic Unit & General Observations	Installation
										0.0 / 2.9			0.10 / 2.79	FILL SLAG: grey, fine to coarse grained, angular sand matrix.	W<PL	VL				FILL (CEMENTED SLAG)	SMW02
														FILL CLAY: high plasticity, brown to black, trace fine to coarse grained sand, angular to sub-rounded gravel.		VS				FILL	0.7
										1.0 / 1.9				1.10: increasing brown		L					1.0
										2.0 / 0.9											2.0
													2.90 / -0.01	FILL Clayey Silty SAND: fine to medium grained, sub-rounded, black, low plasticity clay.							3.0
										4.0 / -1.1			4.00	Hole Terminated at 4.00 m Target Depth (standpipe installed)							4.0
										5.0											

Observations and Comments
PVC pipe stick up 0.74m

Notes
Classifications compliant with AS1726-2017: Geotechnical Site Investigations unless otherwise noted.
Defect Log Abridged. Additional detail in digital dataset. Lugeon: BS5930:1999
For Inclined Holes: Angles reported in defects are apparent dip from core horizontal unless as α or β.
Refer to explanatory notes for SMEC logs for details of abbreviations or basis of description.

Logged By	BP	Date	04/06/2022
Approved By	AW	Date	27/04/2022
Status	3	Page	1 of 1

SMEC 2.10.13 UB.GLB Log _SMEC HYBRID LOG LANDSCAPE_SOIL SMEC ENV WOL 30013174.GPJ <<DrawingFile>> 27/04/2022 16:28 10.02.00.04 Datgel Tools | Lib: SMEC 2.10.9 2021-08-30 Prj: SMEC 2.10.8 2020-09-10

Geological & Engineering Log

Project	Pipeline Route TSI	East	307881.900 m	Start Date	20/04/2022	Contractor	Numac Drilling
Client	Manildra Group	North	6183114.520 m	End Date	20/04/2022	Rig Type	Sonic
Site	Port Kembla	Elevation	3.090 m			Mounting	Track
Job No	30013174	Datum	MGA94 Zone 56/AHD				

Inclination 90°
Azimuth
North
Survey

SMEC
Member of the Surbana Jurong Group

Borehole Identifier: **SMW03**

Method	Casing	Support	Water (Gain/Loss)	Run (TCR)	Sampling	Testing: SPT	Testing: PP (kPa) VS (kPa) Peak / Remoulded PID (ppm)	Testing: DCP	Water Level & Inflow	Depth (m) Elevation	Graphic Log	Soil Code	Depth RL	Soil / Rock Material Description	Moisture Condition	Consistency Density	Alteration	Weathering	Rock Strength	Origin, Stratigraphic Unit & General Observations	Installation
SD	Casing								20/04/22	0.0 / 3.1			3.09	FILL Gravelly CLAY: low to medium plasticity, pale brown, fine to coarse grained, angular gravel, with fine to coarse grained sand, with cobbles (60-80mm) comprising sandstone.	M	F				FILL	0.3
													0.80 / 2.29	FILL Sandy CLAY: low to medium plasticity, brown mottled orange, fine to coarse grained sand, with fine to medium grained gravel.							1.0
										1.0 / 2.1										1.50: Driller noted some resistance	1.5
										2.0 / 1.1				2.00-2.30: SAND, medium grained, pale brown observed							2.0
													2.30 / 0.79	FILL Gravelly SILT: low plasticity, dark grey, fine to coarse grained gravel, with cobbles and boulders comprising latite (dark grey-black with shiny inclusions).		St					
										3.0 / 0.1				3.00-3.30: Boulder encountered/penetrated						3.00-3.30: Driller cored through boulder	3.0
													3.30 / -0.21	SAND: medium grained, yellow-red.		L				ESTUARINE	
										4.0 / -0.9		SP		4.00-4.50: becoming pale yellow							4.0
													4.50								4.5
										5.0				Hole Terminated at 4.50 m Target Depth (standpipe installed)							

Observations and Comments
Standpipe Surface Completion: Monument; Hole Flushed, PVC pipe stick up 0.69m; No Water Sample collected
Development Method: Bailer; Well Development - Purged 40L, brown, torbid water; Well Volume ~13L

Notes
Classifications compliant with AS1726-2017: Geotechnical Site Investigations unless otherwise noted.
Defect Log Abridged. Additional detail in digital dataset. Lugeon: BS5930:1999
For Inclined Holes: Angles reported in defects are apparent dip from core horizontal unless as α or β.
Refer to explanatory notes for SMEC logs for details of abbreviations or basis of description.

Logged By	AW	Date	20/04/2022
Approved By	AW	Date	27/04/2022
Status	3	Page	1 of 1

SMEC 2.10.13 UB.GLB Log _SMEC HYBRID LOG LANDSCAPE_SOIL SMEC ENV WOL 30013174.GPJ <<DrawingFile>> 27/04/2022 16:32 10.02.00.04 Datgel Tools | Lib: SMEC 2.10.9 2021-08-30 Prj: SMEC 2.10.8 2020-09-10

Geological & Engineering Log

Project	Pipeline Route TSI	East	307848.120 m	Start Date	20/04/2022	Contractor	Numac Drilling
Client	Manildra Group	North	6183124.300 m	End Date	20/04/2022	Rig Type	Sonic
Site	Port Kembla	Elevation	2.960 m			Mounting	Track
Job No	30013174	Datum	MGA94 Zone 56/AHD				

Inclination 90°
Azimuth
North
Survey

SMEC
Member of the Surbana Jurong Group

Borehole Identifier: **SMW04**

Method	Casing	Support	Water (Gain/Loss)	Run (TCR)	Sampling	Testing: SPT	Testing: PP (kPa) VS (kPa) Peak / Remoulded PID (ppm)	Testing: DCP	Water Level & Inflow	Depth (m) Elevation	Graphic Log	Soil Code	Depth RL	Soil / Rock Material Description	Moisture Condition	Consistency Density	Alteration	Weathering	Rock Strength	Origin, Stratigraphic Unit & General Observations	Installation
SD	Casing								20/04/22	0.0 / 3.0			2.96	FILL Gravelly SAND: fine to coarse grained, brown, fine to coarse grained gravel.	M	MD				FILL	0.3
										1.0 / 2.0			1.00 / 1.96	FILL Sandy CLAY: low to medium plasticity, brown, medium to coarse grained sand, with fine to medium grained gravel.		F				1.00: Driller noted increased resistance (possible boulders)	1.0
														2.30-2.50: Boulder encountered, Latite, dark grey, angular borken edges							1.5
										2.0 / 1.0											2.0
													2.70 / 0.26	SAND: medium grained, yellow-red.		L				ESTUARINE	
										3.0 / 0.0											3.0
												SP		3.50-4.50: becoming pale yellow							
										4.0 / -1.0											4.0
													4.50								4.5
														Hole Terminated at 4.50 m Target Depth (standpipe installed)							
										5.0											

Observations and Comments

PVC Pipe Stick Up: 0.65m; Hole Flushed; No Water Sample collected
Development Method: Bailer; Well Volume ~13.4L
Well Development - Purged 40L, brown, torbid water 0-20L; pale brown, slightly cloudy 20-40L (improved clarity)

Notes

Classifications compliant with AS1726-2017: Geotechnical Site Investigations unless otherwise noted.
Defect Log Abridged. Additional detail in digital dataset. Lugeon: BS5930:1999
For Inclined Holes: Angles reported in defects are apparent dip from core horizontal unless as α or β.
Refer to explanatory notes for SMEC logs for details of abbreviations or basis of description.

Logged By	AW	Date	20/04/2022
Approved By	AW	Date	27/04/2022
Status	3	Page	1 of 1

SMEC 2.10.13 UB.GLB Log _SMEC HYBRID LOG LANDSCAPE_SOIL SMEC ENV WOL 30013174.GPJ <<DrawingFile>> 27/04/2022 16:32 10.02.00.04 Datgel Tools | Lib: SMEC 2.10.9 2021-08-30 Prj: SMEC 2.10.8 2020-09-10

Geological & Engineering Log

Project	Pipeline Route TSI	East	307825.760 m	Start Date	20/04/2022	Contractor	Numac Drilling
Client	Manildra Group	North	6183134.070 m	End Date	20/04/2022	Rig Type	Sonic
Site	Port Kembla	Elevation	2.860 m			Mounting	Track
Job No	30013174	Datum	MGA94 Zone 56/AHD				

Inclination 90°
Azimuth
North
Survey

SMEC
Member of the Surbana Jurong Group

Borehole Identifier: **SMW05**

Method	Casing	Support	Water (Gain/Loss)	Run (TCR)	Sampling	Testing: SPT	Testing: PP (kPa) VS (kPa) Peak / Remoulded PID (ppm)	Testing: DCP	Water Level & Inflow	Depth (m) / Elevation	Graphic Log	Soil Code	Depth / RL	Soil / Rock Material Description	Moisture Condition	Consistency Density	Alteration	Weathering	Rock Strength	Origin, Stratigraphic Unit & General Observations	Installation
SD	Casing								20/04/22	0.0 / 2.9			0.10 / 2.76	FILL SILT with gravel: with fine to coarse grained gravel, trace coarse grained, sub-angular to angular gravel.	D	L				FILL	
														FILL CEMENTED SLAG.		VD				FILL (CEMENTED SLAG) 0.10-0.40: heavily pulverised cemented material	SMW05 0.3
													0.40 / 2.46	FILL Gravelly CLAY: black, pale grey, fine to coarse, sub-angular to sub-rounded gravel, with sand, trace rootlets.	M	F				FILL	1.0
										1.0 / 1.9											1.5
													1.70 / 1.16	FILL Clayey GRAVEL: fine to coarse grained, sub-angular, black, yellow brown, with sand.	D						2.0
										2.0 / 0.9											
													2.30 / 0.56	FILL Gravelly SAND: fine to coarse grained, brown, red brown, fine grained, sub-angular to sub-rounded gravel, trace pebbles, trace clay.	M	L					
										3.0 / -0.1			3.00 / -0.14	LATITE BOULDERS / COBBLES.	W	VD				PULVERISED MATERIAL AROUND FRAGMENTS	3.0
												SP	3.20 / -0.34	SAND: fine grained, red, yellow, pale brown.	M	L				ESTUARINE (QUARTZ BASED)	
												SP	3.70 / -0.84	SAND: fine grained, yellow, pale brown to pale grey.	W						4.0
										4.0 / -1.1			4.50								4.5
										5.0				Hole Terminated at 4.50 m Target Depth (standpipe installed)							

Observations and Comments

PVC Pipe Stick Up: 0.72m; Hole Flushed; No Water Sample collected
Development Method: Bailer; Well Volume 13.4L

Notes

Classifications compliant with AS1726-2017: Geotechnical Site Investigations unless otherwise noted.
Defect Log Abridged. Additional detail in digital dataset. Lugeon: BS5930:1999
For Inclined Holes: Angles reported in defects are apparent dip from core horizontal unless as α or β.
Refer to explanatory notes for SMEC logs for details of abbreviations or basis of description.

Logged By	KH	Date	20/04/2022
Approved By	AW	Date	27/04/2022
Status	3	Page	1 of 1

SMEC 2.10.13 UB.GLB Log _SMEC HYBRID LOG LANDSCAPE_SOIL SMEC ENV WOL 30013174.GPJ <<DrawingFile>> 27/04/2022 16:32 10.02.00.04 Datgel Tools | Lib: SMEC 2.10.9 2021-08-30 Prj: SMEC 2.10.8 2020-09-10

Geological & Engineering Log

Project	Pipeline Route TSI	East	307734.250 m	Start Date	04/06/2022	Contractor	Epoca	Inclination	90°
Client	Manildra Group	North	6183055.700 m	End Date	04/06/2022	Rig Type	Geoprobe 7822DT	Azimuth	
Site	Port Kembla	Elevation	3.410 m			Mounting		North	
Job No	30013174	Datum	MGA94 Zone 56/AHD					Survey	

SMEC
Member of the Surbana Jurong Group

Borehole Identifier: **SMW06**

Method	Casing	Support	Water (Gain/Loss)	Run (TCR)	Sampling	Testing: SPT	Testing: PP (kPa) VS (kPa) Peak / Remoulded PID (ppm)	Testing: DCP	Water Level & Inflow	Depth (m) / Elevation	Graphic Log	Soil Code	Depth / RL	Soil / Rock Material Description	Moisture Condition	Consistency Density	Alteration	Weathering	Rock Strength	Origin, Stratigraphic Unit & General Observations	Installation
										0.0 / 3.4			3.31	FILL Silty SAND: grey, abundant grass.	M					FILL (TOPSOIL) 0.00: 0.76m standpipe stick up	SMW06
													0.30 / 3.11	FILL Clayey SAND: fine to coarse grained, sub-rounded to sub-angular, grey, trace gravel.						FILL	
													0.50 / 2.91	FILL Silty Gravelly SAND: fine to coarse grained, sub-rounded to sub-angular, black, coalwash.							
														FILL Sandy Gravelly CLAY: red brown, fine to coarse grained, sub-angular to rounded sand, rounded coarse furnace slag gravel.	W<PL						
										1.0 / 2.4				FILL Silty SAND: grey.	M						
										2.0 / 1.4			2.00 / 1.41	SAND: fine to coarse grained, angular to rounded, yellow, quartz/lithic.	W					AEOLIAN	
										3.0 / 0.4		SP									
										4.0 / -0.6			4.50								
										5.0				Hole Terminated at 4.50 m Target Depth (standpipe installed)							

Installation: 1.0, 1.5, 2.0, 3.0, 4.0, 4.5

Observations and Comments
PVC pipe stick up 0.76m

Notes
Classifications compliant with AS1726-2017: Geotechnical Site Investigations unless otherwise noted.
Defect Log Abridged. Additional detail in digital dataset. Lugeon: BS5930:1999
For Inclined Holes: Angles reported in defects are apparent dip from core horizontal unless as α or β.
Refer to explanatory notes for SMEC logs for details of abbreviations or basis of description.

Logged By	BP	Date	04/06/2022
Approved By	AW	Date	27/04/2022
Status	3	Page	1 of 1

SMEC 2.10.13 UB.GLB Log _SMEC HYBRID LOG LANDSCAPE_SOIL SMEC ENV WOL 30013174.GPJ <<DrawingFile>> 27/04/2022 16:32 10.02.00.04 Datgel Tools | Lib: SMEC 2.10.9 2021-08-30 Prj: SMEC 2.10.8 2020-09-10

Appendix D **Proposed design drawings**

TFA Group Pty Ltd (2021), Civil Drawing Set – Issued for Tender, Drawing ref: 20399-C00 to C17, C20 and C21, dated 23.11.21

TFA Group Pty Ltd (2022), Proposed Pipeline Route – D.A Issue, Drawing ref: 20399-DA-P01 to P05, dated 11.03.2022

MANILDRA GROUP
100% AUSTRALIAN OWNED

BULK LIQUIDS FACILITY
PORT KEMBLA, NSW

CIVIL WORKS DRAWINGS

CIVIL	
DRG. No.	DRAWING TITLE
20399-C01	GENERAL CONSTRUCTION NOTES, DRAINAGE & EARTHWORKS
20399-C02	SITE GRADING & DRAINAGE PLAN SHEET 1 OF 2
20399-C03	SITE GRADING & DRAINAGE PLAN SHEET 2 OF 2
20399-C04	STORMWATER PIT SCHEDULE & CONSTRUCTION DETAILS
20399-C05	PIT CONSTRUCTION DETAILS
20399-C06	DISCHARGE OUTLET CONSTRUCTION DETAILS
20399-C07	BULK EARTHWORKS PLAN
20399-C08	CONCEPTUAL EROSION & SEDIMENT CONTROL PLAN
20399-C09	EROSION & SEDIMENT PLAN CONSTRUCTION DETAILS
20399-C10	CONCRETE PAVEMENT LEGEND & CONSTRUCTION NOTES
20399-C11	SITE PAVEMENT PLAN SHEET 1 OF 2
20399-C12	SITE PAVEMENT PLAN SHEET 2 OF 2
20399-C13	SITE PAVEMENT DETAILS SHEET 1 OF 2
20399-C14	SITE PAVEMENT DETAILS SHEET 2 OF 2
20399-C15	SITE RETAINING WALL LONG SECTIONS
20399-C16	SECURITY FENCING DETAILS
20399-C17	PROPOSED DRIVEWAY CROSSOVER PLAN
20399-C20	RETAINING WALL DETAILS SHEET 1
20399-C21	RETAINING WALL DETAILS SHEET 2

LOCALITY PLAN
NOT TO SCALE

TENDER ONLY
NOT FOR CONSTRUCTION

PROJECT MANAGERS | PLANNERS | DESIGNERS | ENGINEERS

TfA Project Group

Copyright TfA Group Pty Ltd
This drawing including design & information is covered by Copyright and all rights are reserved. This document may not be copied, reproduced, retained or disclosed to any unauthorised person, either wholly or in part, without prior consent in writing from TfA Group Pty Ltd.
ACN 612 132 233
Ph: 61 7 3854 2900 Aust Wide: 1300 794 300
Email: enquiry@tfa.com.au Web: www.TFA.com.au

REV	DATE	BY	DESCRIPTION	CHK	APP
A	23.11.2021	LS	ISSUED FOR TENDER		

PROJECT CLIENT: MANILDRA GROUP 100% AUSTRALIAN OWNED

PROJECT DETAILS: MANILDRA GROUP
PORT KEMBLA
BULK LIQUIDS FACILITY
FORESHORE ROAD
PORT KEMBLA, NSW

DRAWING TITLE: CIVIL WORKS DRAWING SCHEDULE

STATUS: TENDER

DATE CREATED	ORIGINAL SCALE	SHEET
23.11.2021	NTS	A3

DO NOT SCALE THIS DRAWING. CONFIRM ALL DIMENSIONS ON SITE.

DRAWING NO	REV
20399-C00	A

GENERAL NOTES:

1. ALL DIMENSIONS AND CO-ORDINATES ARE TO BE VERIFIED ON SITE BEFORE WORK COMMENCES.
2. FIGURED DIMENSIONS ARE TO TAKE PRECEDENCE OVER SCALE READINGS.
3. DURING CONSTRUCTION, BARRIERS, LIGHTS & SIGNS SHALL BE MAINTAINED TO ENSURE SAFE PASSAGE OF TRAFFIC AND PEDESTRIANS IN ACCORDANCE WITH THE REQUIREMENTS OF THE LOCAL AUTHORITY.
4. ALL WORKMANSHIP AND MATERIALS SHALL BE IN ACCORDANCE WITH AUSTRALIAN STANDARDS BY-LAWS AND ORDINANCES OF THE RELEVANT LOCAL AUTHORITY, AND WORKPLACE HEALTH AND SAFETY REQUIREMENTS.
5. THE CONTRACTOR SHALL MAKE GOOD, AT HIS COST, ANY DAMAGE TO ANY SERVICE IF SUCH DAMAGE OCCURS AS A RESULT OF HIS OPERATIONS.
6. ALL DISTURBED VERGE AREAS MUST BE REINSTATED WITH TURF.
7. ALTER ANY SERVICES WHEN THE RELEVANT AUTHORITY OR ASSESSMENT MANAGER DETERMINES THAT THE WORK ASSOCIATED WITH THIS DEVELOPMENT HAVE IMPACTED EXISTING SERVICES.
8. THE SURVEY INFORMATION SHOWN MAY NOT ADEQUATELY REFLECT CURRENT SITE CONDITIONS. THE CONTRACTOR SHALL ASSESS SITE CONDITIONS PRIOR TO COMMENCING CONSTRUCTION. ANY DISCREPANCIES IN THE SURVEY INFORMATION SHALL BE REPORTED TO THE SUPERINTENDENT. REFER TO SURVEY FOR DETAILS.
5. EXISTING SERVICES SHOWN HAVE NOT BEEN CONFIRMED ON SITE. THE CONTRACTOR SHALL DETERMINE THE LOCATION AND DEPTH OF SERVICES WITHIN OR ADJACENT TO THE WORKS BY CONTACTING THE RELEVANT SERVICE AUTHORITY AND APPROVED UNDERGROUND SERVICES LOCATOR A MINIMUM OF 14 DAYS PRIOR TO COMMENCEMENT OF WORKS. ADVISE THE SUPERINTENDENT OF ANY DISCREPANCIES AND CLASHES BEFORE PROCEEDING. THE CONTRACTOR SHALL BE REQUIRED TO COORDINATE AND PROGRAM WORKS TO RESOLVE ANY CLASHES WITH RELEVANT SERVICE AUTHORITIES PRIOR TO COMMENCEMENT OF ANY WORKS. RESOLUTION OF CLASHES SHALL BE APPROVED BY THE RELEVANT SERVICE AUTHORITIES.
6. ALL NEW WORK SHALL BE JOINED NEATLY TO EXISTING. PROPOSED LEVELS FOR CONNECTING TO EXISTING WORKS MAY BE VARIED WHERE NECESSARY ON SITE BY THE SUPERINTENDENT TO ACHIEVE A SATISFACTORY SMOOTH FINISH.
7. THE CONTRACTOR IS RESPONSIBLE FOR THE REMOVAL AND DISPOSAL OF ALL RUBBISH AND SPOIL FROM THE SITE.

STORMWATER DRAINAGE NOTES:

1. ALL DIMENSIONS ARE TO BE CHECKED ON-SITE BEFORE WORK COMMENCES
2. FIGURED DIMENSIONS ARE TO TAKE PRECEDENCE OVER SCALE READINGS.
3. DURING CONSTRUCTION, BARRIERS, LIGHTS & SIGNS SHALL BE MAINTAINED TO ENSURE SAFE PASSAGE OF TRAFFIC AND PEDESTRIANS IN ACCORDANCE WITH THE REQUIREMENTS OF THE LOCAL AUTHORITY.
4. ALL WORKMANSHIP AND MATERIALS SHALL BE IN ACCORDANCE WITH S.A.A CODES & BY-LAWS AND ORDINANCES OF THE RELEVANT LOCAL AUTHORITY, AND WORKPLACE HEALTH AND SAFETY REQUIREMENTS.
5. CONTRACTOR TO VERIFY ALL INVERT LEVELS, SURFACE LEVELS, COVER OVER DRAINAGE LINES, AND MINIMUM FALLS ARE CORRECT & OBTAINABLE PRIOR TO COMMENCEMENT OF WORKS.
6. PIPES Ø375 AND LARGER TO BE REINFORCED CONCRETE OR FRC CLASS `2' APPROVED SPIGOT AND SOCKET WITH RUBBER RING JOINTS U.N.O.
7. PIPES UP TO Ø300 SHALL BE SEWER GRADE PVC-U MINIMUM CLASS SN6 WITH SOLVENT WELDED JOINTS..
8. PIPES SHALL BE LAID AS PER TYPICAL PIPE TRENCH DETAIL AND IN ACCORDANCE WITH AS1289 5.2.1.
9. FOR TRENCHES NOT UNDER PAVEMENTS WHERE EXCAVATED MATERIAL MAY BE USED FOR BACKFILL, THE MATERIAL SHALL BE COMPACTED TO THE SAME DENSITY AS THE UNDISTURBED MATERIAL EITHER SIDE OF THE TRENCH.
10. WHERE TRENCHES ARE IN ROCK, THE PIPE SHALL BE BEDDED ON A MINIMUM OF 50mm CONCRETE BED (OR 75mm BED OF 12mm BLUE METAL) UNDER THE BARREL OF THE PIPE.
11. ENLARGERS, CONNECTORS AND JUNCTIONS TO BE PRECAST OR PROPRIETARY FITTINGS WHERE PIPES ARE LESS THAN Ø300.
12. CARE IS TO BE TAKEN WITH LEVELS OF STORMWATER LINES. GRADES SHOWN ARE NOT TO BE REDUCED WITHOUT APPROVAL.
13. GRATES AND COVERS SHALL CONFORM TO AS 3996.
14. ALL FINISHED SURFACE LEVELS SHOWN ON GULLY GRATES AND MANHOLES ARE LOCATED ON THE CAST IRON COVER UNLESS OTHERWISE SHOWN.
15. ON COMPLETION OF PIPE INSTALLATION ALL DISTURBED AREAS MUST BE REINSTATED TO "AS FOUND" CONDITION.
16. THE CONTRACTOR SHALL MAKE GOOD, AT HIS COST, ANY DAMAGE TO ANY SERVICE IF SUCH DAMAGE OCCURS AS A RESULT OF HIS OPERATIONS.
17. CONSTRUCT STORMWATER LINES, PITS AND MANHOLES IN ACCORDANCE WITH RELEVANT LOCAL AUTHORITY STANDARD DRAWINGS & SPECIFICATIONS IF NOT OTHERWISE DETAILED ON THE DRAWINGS.
18. ALL PITS/MANHOLES DEEPER THAN 1000mm TO BE FIXED WITH GALV. STEEL PROPRIETARY STEP IRONS.
19. ALL UNDERGROUND SERVICES ARE TO BE PROVEN ONSITE AND THE CONTRACTOR TO LIAISE WITH RELEVANT AUTHORITIES REGARDING ANY IMPACTS PRIOR TO COMMENCEMENT OF ANY CONSTRUCTION WORKS..

EARTHWORKS NOTES:

SUBGRADE PREPARATION :

1. AREAS UPON WHICH FILL IS TO BE PLACED SHALL BE CLEARED, GRUBBED AND STRIPPED. THE TOTAL AREA ON WHICH FILL IS TO BE PLACED SHALL BE FREE OF SOFT AREAS, WITH THE TOP 150mm OF THE NATURAL SUBGRADE MATERIAL COMPACTED TO 95% STANDARD MAXIMUM DRY DENSITY (MDD-S) COMPACTED AT OPTIMUM MOISTURE CONTENT (OMC) ± 3% PRIOR TO FILLING. THE AREA SHALL BE PROOF ROLLED IN THE PRESENCE OF THE SUPERINTENDENT TO DETERMINE POORLY COMPACTED, SOFT OR UNSTABLE AREAS WITH UP TO 4 PASSES OF EITHER:
   - MINIMUM 8 TONNE (STATIC WEIGHT) VIBRATING STEEL SMOOTH DRUM ROLLER,
   - OPERATING UNDER FULL AMPLITUDE VIBRATION, ROLLING AT APPROXIMATELY 2KM/HR
     OR
   - MINIMUM 20 TONNE (STATIC WEIGHT) RUBBER TYRED, ROLLER, WITH PRESSURE 900kPa MINIMUM, ROLLING AT 3-4KM/HR.
2. WHERE DIRECTED BY THE SUPERINTENDENT, SOFT, WET OR UNSTABLE AREAS SHALL BE EXCAVATED AND THE UNSUITABLE MATERIAL REUSED ON SITE EITHER BY DRYING OUT OR FOR MIXING WITH IMPORTED MATERIAL TO ENABLE COMPACTION AS FILLING.
3. THE BOTTOM OF SUCH EXCAVATION SHALL BE COMPACTED WITH APPROVED EQUIPMENT TO 95% MDD-S, COMPACTED AT OMC ± 3% PRIOR TO BACKFILLING WITH APPROVED FILL MATERIAL.
4. ON NO ACCOUNT SHALL ANY FILL BE PLACED BEFORE APPROVAL OF THIS AREA IS GIVEN BY THE SUPERINTENDENT.
5. QUANTITIES OF UNSUITABLE MATERIAL NOT OTHERWISE APPARENT BY SITE INSPECTION AT TIME OF TENDER SHALL BE INSPECTED AND AGREED WITH THE SUPERINTENDENT WHEN ENCOUNTERED AT PROOF ROLLING.
6. WHERE SIGNIFICANT GROUND WATER IS ENCOUNTERED AFTER REMOVAL OF EXISTING FILL A GRANULAR BRIDGING LAYER SHALL BE PROVIDED PRIOR TO PLACING OF GENERAL FILL. THE BRIDGING LAYER SHALL BE 75mm MAX SIZE 'BALLAST' ROCK WITH A GEOSYNTHETIC SEPARATION LAYER BETWEEN ANY BRIDGING LAYER AND THE OVERLYING FILL. REFER ENGINEER FOR SPECIFIC DETAILS.

FILL MATERIAL:

1. THE CONTRACTOR SHALL ALLOW TO IMPORT ALL FILL MATERIAL TO THE SITE IN EXCESS OF ON SITE CUT TO FILL. WITH HIS TENDER THE CONTRACTOR SHALL PROVIDE DETAILS OF ALL IMPORTED MATERIAL PROPOSED TO BE USED AS FILL INCLUDING, BUT NOT LIMITED TO, THE SOURCES OF FILL, PLASTIC INDEX, LINEAR SHRINKAGE, PARTICLE GRADINGS, CALIFORNIA BEARING RATIO (CBR). ANY MATERIAL TEST INFORMATION PROVIDED MUST BE CARRIED OUT BY A NATA REGISTERED LABORATORY. DURING TENDER NEGOTIATIONS MORE EXTENSIVE TESTING MAY BE REQUESTED TO CONFIRM THE QUALITY OF PROPOSED FILL FROM SPECIFIC SITES NOMINATED AS ORIGINS OF FILL AS WELL AS SITE INSPECTIONS.
2. QUALITY CONTROL TESTING OF IMPORTED FILL SHALL BE UNDERTAKEN BY A NATA APPROVED LABORATORY AS PART OF LEVEL '1' SUPERVISION TO ENABLE CERTIFICATION THAT ALL FILL MATERIALS MEETS THE MINIMUM STANDARDS ACCEPTED BY THE PRINCIPAL. THIS WILL INCLUDE PLASTIC INDEX, LINEAR SHRINKAGE, PARTICLE GRADINGS, CBR AS CONSIDERED NECESSARY.
3. GENERAL FILL QUALITY: WELL GRADED GRANULAR MATERIAL HAVING PROPERTIES AS FOLLOWS:

- MAXIMUM PARTICLE SIZE: 75mm
- PLASTICITY INDEX: <15%
- LIQUID LIMIT: <35%
- CBR >15

FILL CONSTRUCTION:

1. ALL FILL MATERIAL SHALL BE PLACED, SPREAD AND COMPACTED IN UNIFORM LAYERS NOT EXCEEDING 150mm COMPACTED THICKNESS. DURING PLACEMENT OF FILL, THE MOISTURE CONTENT SHALL BE CONTROLLED WITHIN -3% AND +1% OF OMC. EACH LAYER AS IT IS PLACED SHALL BE COMPACTED TO 98% MDD-S BEFORE THE FOLLOWING LAYER IS PLACED. FILL MATERIAL WHICH BECOMES EXCESSIVELY WET AFTER PLACEMENT SHALL BE DRIED OUT AND RE-COMPACTED TO 98% MDD-S, OR SHALL BE REPLACED WITH APPROVED MATERIAL AGAIN COMPACTED TO 98% MDD-S, AT THE CONTRACTOR'S EXPENSE.
2. DENSITY TESTS SHALL BE CARRIED OUT BY A NATA APPROVED LABORATORY. REWORK AND RETEST AREAS WHICH DO NOT ACHIEVE DENSITY UNTIL THAT DENSITY IS ACHIEVED AT THE CONTRACTOR'S EXPENSE.
3. TESTS SHALL BE CARRIED OUT AT NOT LESS THAN ONE TEST PER 500m^3 OR ONE TEST PER LAYER PER 2500m^2 WHICHEVER REQUIRES THE MORE TESTS; DISTRIBUTE THE TESTS EVENLY THROUGHOUT THE FILL.
4. A COPY OF ALL TESTS RESULTS SHALL BE FAXED DIRECTLY TO THE SUPERINTENDENT BY THE LABORATORY IMMEDIATELY WHEN THE TEST RESULTS ARE AVAILABLE AND THEN TO THE CONTRACTOR. A REPORT OF ALL COMPACTION TESTING WILL BE REQUIRED WITH THE FILL CERTIFICATION DETAILING EXACT LOCATIONS AND LEVEL OF TESTS UNDERTAKEN AND ALL REMEDIAL WORK UNDERTAKEN AND RETESTED.
5. SUPERVISION OF FILLING OPERATIONS BY A NATA APPROVED LABORATORY WILL BE REQUIRED TO ENABLE CERTIFICATION THAT ALL FILL HAS BEEN PLACED AND COMPACTED IN ACCORDANCE WITH THIS SPECIFICATION TO LEVEL '1' IN ACCORDANCE WITH AS3798.

GRADING TO FORMATION LEVEL:

1. ON COMPLETION OF EXCAVATION OR FILLING AS SPECIFIED, THE FORMATION SHALL BE GRADED TO CONFORM ACCURATELY TO THE LINES, GRADES AND CROSS-SECTION SHOWN ON THE DRAWINGS CONFORMING TO A LEVEL TOLERANCE OF ± 20mm GENERALLY. PROVIDE EVEN GRADES GENERALLY BETWEEN SPOT LEVELS.

ENVIRONMENTAL PROTECTION:

1. THE CONTRACTOR SHALL BE RESPONSIBLE FOR SUPPLYING, ERECTING AND MAINTAINING EROSION AND SEDIMENT CONTROL DEVICES ON THE SITE AND ENTRY TO THE SITE TO COMPLY WITH ALL STATUTORY AND LOCAL GOVERNMENT REQUIREMENTS.
2. THIS MAY INVOLVE THE CONSTRUCTION OF SEDIMENT FENCES TO THE PERIMETER OF THE SITE TO PREVENT CONTAMINATED STORMWATER ENTERING WATERWAYS AND ALSO APPROPRIATE MEASURES TO PREVENT TRACKING OF MATERIALS ONTO PUBLIC ROADS. IN ADDITION THE CONTRACTOR SHALL TAKE ALL REASONABLE PRECAUTIONS TO ELIMINATE DUST NUISANCE FROM THE SITE.

TENDER ONLY
NOT FOR CONSTRUCTION

PROJECT MANAGERS | PLANNERS | DESIGNERS | ENGINEERS

TFA Project Group

Copyright TfA Group Pty Ltd
This drawing including design & information is covered by Copyright and all rights are reserved. This document may not be copied, reproduced, retained or disclosed to any unauthorised person, either wholly or in part, without prior consent in writing from TfA Group Pty Ltd.

ACN 612 132 233
Ph: 61 7 3854 2900 Aust Wide: 1300 794 300
Email: enquiry@tfa.com.au Web: www.TFA.com.au

REV	DATE	BY	DESCRIPTION	CHK	APP
A	19.11.2021	LS	ISSUED FOR TENDER		

PROJECT CLIENT: MANILDRA GROUP 100% AUSTRALIAN OWNED

PROJECT DETAILS: MANILDRA GROUP, PORT KEMBLA, BULK LIQUIDS FACILITY, FORESHORE ROAD, PORT KEMBLA, NSW

DRAWING TITLE: GENERAL CONSTRUCTION NOTES, DRAINAGE & EARTHWORKS

STATUS: TENDER

DATE CREATED	ORIGINAL SCALE	SHEET
19.11.2021	NTS	A3

DO NOT SCALE THIS DRAWING. CONFIRM ALL DIMENSIONS ON SITE.

DRAWING NO	REV
20399-C01	A

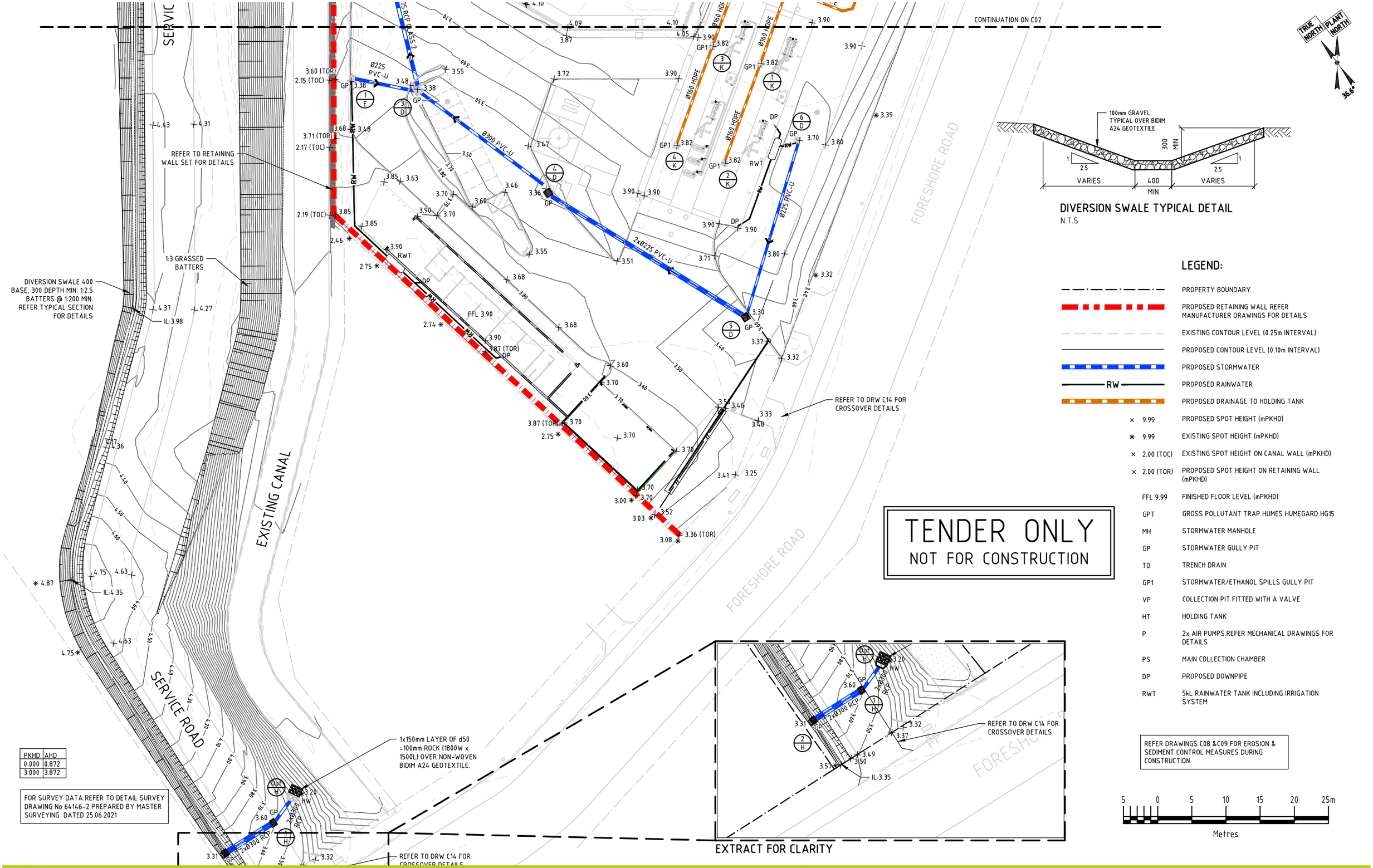

TENDER ONLY
NOT FOR CONSTRUCTION

PKHD	AHD
0.000	0.872
3.000	3.872

FOR SURVEY DATA REFER TO DETAIL SURVEY DRAWING No 64146-2 PREPARED BY MASTER SURVEYING DATED 25.06.2021

PROJECT MANAGERS | PLANNERS | DESIGNERS | ENGINEERS

TFA Project Group

Copyright TfA Group Pty Ltd
This drawing including design & information is covered by Copyright and all rights are reserved. This document may not be copied, reproduced, retained or disclosed to any unauthorised person, either wholly or in part, without prior consent in writing from TfA Group Pty Ltd.
ACN 612 132 233
Ph: 61 7 3854 2900 Aust Wide: 1300 794 300
Email: enquiry@tfa.com.au Web: www.TFA.com.au

REV	DATE	BY	DESCRIPTION	CHK	APP
A	19.11.2021	LS	ISSUED FOR TENDER		

PROJECT CLIENT: MANILDRA GROUP 100% AUSTRALIAN OWNED

PROJECT DETAILS: MANILDRA GROUP
PORT KEMBLA
BULK LIQUIDS FACILITY
FORESHORE ROAD
PORT KEMBLA, NSW

DRAWING TITLE: SITE GRADING & DRAINAGE PLAN. SHEET 1 OF 2

STATUS: TENDER

DATE CREATED	ORIGINAL SCALE	SHEET
02.09.2021	1:500	A3

DO NOT SCALE THIS DRAWING. CONFIRM ALL DIMENSIONS ON SITE.

DRAWING NO	REV
20399-C02	A

TENDER ONLY
NOT FOR CONSTRUCTION

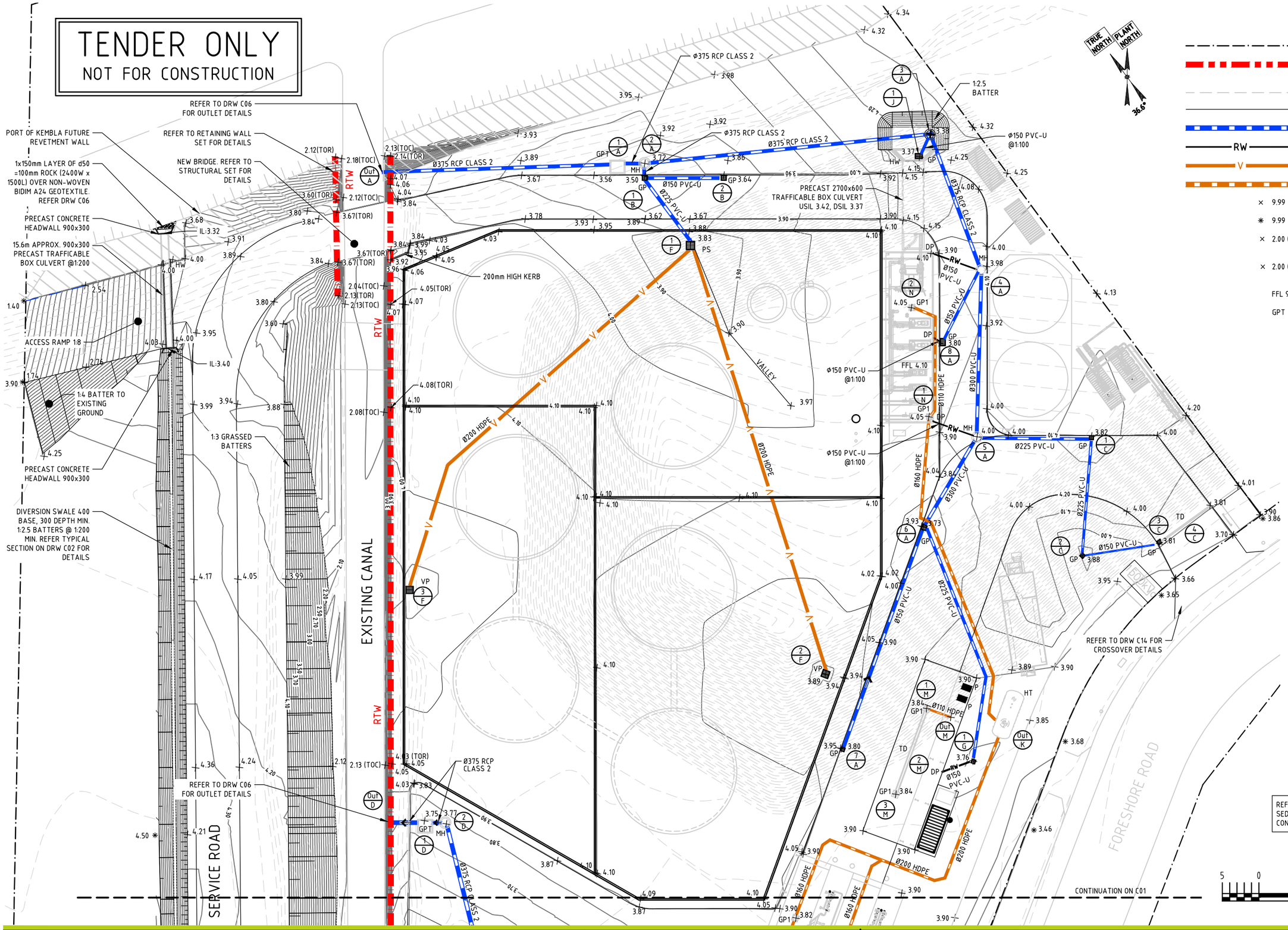

LEGEND:

	PROPERTY BOUNDARY
	PROPOSED RETAINING WALL. REFER MANUFACTURER DRAWINGS FOR DETAILS
	EXISTING CONTOUR LEVEL (0.25m INTERVAL)
	PROPOSED CONTOUR LEVEL (0.10m INTERVAL)
	PROPOSED STORMWATER
RW	PROPOSED RAINWATER @1:100 MIN.
V	PROPOSED VALVED CONTROLLED DRAINAGE
	PROPOSED DRAINAGE TO HOLDING TANK
× 9.99	PROPOSED SPOT HEIGHT (mPKHD)
✳ 9.99	EXISTING SPOT HEIGHT (mPKHD)
× 2.00 (TOC)	EXISTING SPOT HEIGHT ON CANAL WALL (mPKHD)
× 2.00 (TOR)	PROPOSED SPOT HEIGHT ON RETAINING WALL (mPKHD)
FFL 9.99	FINISHED FLOOR LEVEL (mPKHD)
GPT	GROSS POLLUTANT TRAP HUMES HUMEGARD HG15
MH	STORMWATER MANHOLE
GP	STORMWATER GULLY PIT
TD	TRENCH DRAIN
GP1	STORMWATER/ETHANOL SPILLS GULLY PIT
VP	COLLECTION PIT FITTED WITH A VALVE
HT	HOLDING TANK
P	2x AIR PUMPS.REFER MECHANICAL DRAWINGS FOR DETAILS
PS	MAIN COLLECTION CHAMBER
DP	PROPOSED DOWNPIPE
RWT	5kL RAINWATER TANK INCLUDING IRRIGATION SYSTEM

PKHD	AHD
0.000	0.872
3.000	3.872

FOR SURVEY DATA REFER TO DETAIL SURVEY DRAWING No 64146-2 PREPARED BY MASTER SURVEYING DATED 25.06.2021

REFER DRAWINGS C08 &C09 FOR EROSION & SEDIMENT CONTROL MEASURES DURING CONSTRUCTION

REV	DATE	BY	DESCRIPTION	CHK	APP
A	19.11.2021	LS	ISSUED FOR TENDER		

PROJECT MANAGERS | PLANNERS | DESIGNERS | ENGINEERS

TfA Project Group

Copyright TfA Group Pty Ltd
This drawing including design & information is covered by Copyright and all rights are reserved. This document may not be copied, reproduced, retained or disclosed to any unauthorised person, either wholly or in part, without prior consent in writing from TfA Group Pty Ltd.
ACN 612 132 233
Ph: 61 7 3854 2900 Aust Wide: 1300 794 300
Email: enquiry@tfa.com.au Web: www.TFA.com.au

PROJECT CLIENT: MANILDRA GROUP 100% AUSTRALIAN OWNED

PROJECT DETAILS: MANILDRA GROUP
PORT KEMBLA
BULK LIQUIDS FACILITY
FORESHORE ROAD
PORT KEMBLA, NSW

DRAWING TITLE: SITE GRADING & DRAINAGE PLAN. SHEET 2 OF 2

STATUS: TENDER

DATE CREATED	ORIGINAL SCALE	SHEET
02.09.2021	1:500	A3

DO NOT SCALE THIS DRAWING. CONFIRM ALL DIMENSIONS ON SITE.

DRAWING NO	REV
20399-C03	A

STORMWATER PIT/MANHOLE SCHEDULE					
STRUCTURE No	STRUCTURE DESCRIPTION	GRATE/LID TYPE	SL	IL US	IL DS
OUT/A ×	OUTLET THROUGH RETAINING WALL	N/A	-	2.14	2.12 ×
1/A	HUMES HUMEGARD HG15	CLASS 'B' LIDS BY HUMES	3.50	2.46	2.46
2/A	1050mm DIAM. PRECAST CONCRETE MANHOLE	600 DIAM. CLASS 'B' GALV. OR C.I. LID & FRAME	3.72	FROM 3/A 2.50 FROM 1/B 2.66	2.48
3/A	1050mm DIAM. PRECAST CONCRETE MANHOLE	600 DIAM. CLASS 'B' GALV. OR C.I. LID & FRAME	3.38	FROM 1/J & 4/A 2.79	2.77
4/A	1200mm DIAM. PRECAST CONCRETE MANHOLE	600 DIAM. CLASS 'D' GALV. OR C.I. LID & FRAME	3.98	2.96	2.94
5/A	1050mm DIAM. PRECAST CONCRETE MANHOLE	600 DIAM. CLASS 'D' GALV. OR C.I. LID & FRAME	4.00	FROM 6/A 3.15 FROM 1/B 3.15	3.13
6/A	600 SQ CAST IN-SITU GULLY PIT WITH 200mm THICK WALLS & BASE	600 SQ CLASS 'D' GALV. OR C.I. GRATE & FRAME	3.73	3.04	3.02
7/A	450 SQ CAST IN-SITU GULLY PIT WITH 200mm THICK WALLS & BASE	450 SQ CLASS 'D' GALV. OR C.I. GRATE & FRAME	3.80	-	3.36
8/A	450 SQ CAST IN-SITU GULLY PIT WITH 200mm THICK WALLS & BASE	450 SQ CLASS 'D' GALV. OR C.I. GRATE & FRAME	3.80	-	3.07
1/B	600 SQ CAST IN-SITU GULLY PIT WITH 200mm THICK WALLS & BASE	600 SQ CLASS 'D' GALV. OR C.I. GRATE & FRAME	3.50	FROM 2/B 2.70 FROM 1/F 2.70	2.68
2/B	600 SQ CAST IN-SITU GULLY PIT WITH 200mm THICK WALLS & BASE	600 SQ CLASS 'D' GALV. OR C.I. GRATE & FRAME	3.64	-	2.81
1/C	450 SQ CAST IN-SITU GULLY PIT WITH 200mm THICK WALLS & BASE	450 SQ CLASS 'D' GALV. OR C.I. GRATE & FRAME	3.82	3.32	3.30
2/C	450 SQ CAST IN-SITU GULLY PIT WITH 200mm THICK WALLS & BASE	450 SQ CLASS 'D' GALV. OR C.I. GRATE & FRAME	3.88	3.42	3.40
3/C	450 SQ CAST IN-SITU GULLY PIT WITH 200mm THICK WALLS & BASE	450 SQ CLASS 'D' GALV. OR C.I. GRATE & FRAME	3.81	3.56	3.52
4/C	8.5m OF ATCO SK2-00 POWER DRAIN SLOPED CHANNEL	CLASS 'D' GALV. OR C.I. GRATE & FRAME	3.81 TO 3.81	3.61	3.56
OUT/D ×	OUTLET THROUGH RETAINING WALL	N/A	-	2.23	2.13 ×
1/D	HUMES HUMEGARD HG15	CLASS 'D' LIDS BY HUMES	3.75	2.26	2.26
2/D	1050mm DIAM. PRECAST CONCRETE MANHOLE	600 DIAM. CLASS 'D' GALV. OR C.I. LID & FRAME	3.77	2.29	2.27
3/D	900 SQ CAST IN-SITU GULLY PIT WITH 200mm THICK WALLS & BASE	900 SQ CLASS 'D' GALV. OR C.I. GRATE & FRAME	3.38	FROM 1/E: 2.45 FROM 4/D: 2.45	2.43
4/D	900x600 CAST IN-SITU GULLY PIT WITH 200mm THICK WALLS & BASE	900x600 CLASS 'D' GALV. OR C.I. GRATE & FRAME	3.36	2.64	2.62
5/D	600 SQ CAST IN-SITU GULLY PIT WITH 200mm THICK WALLS & BASE	600 SQ CLASS 'D' GALV. OR C.I. GRATE & FRAME	3.30	2.91	2.89
6/D	600 SQ CAST IN-SITU GULLY PIT WITH 200mm THICK WALLS & BASE	600 SQ CLASS 'D' GALV. OR C.I. GRATE & FRAME	3.70	-	3.15
1/E	450 SQ CAST IN-SITU GULLY PIT WITH 200mm THICK WALLS & BASE	450 SQ CLASS 'D' GALV. OR C.I. GRATE & FRAME	3.38	-	2.55
1/F ××× ××××	1200mm SQ. CAST IN-SITU GULLY PIT FITTED WITH A ISOLATION VALVE	1200 SQ. CLASS 'D' GALV. OR C.I. GRATE & FRAME	3.83	FROM 3/F: 2.78 FROM 2/F: 2.78	2.76
2/F ××	900 SQ CAST IN-SITU GULLY PIT WITH 200mm THICK WALLS & BASE FITTED WITH AN ISOLATION VALVE	900 SQ CLASS 'D' GALV. OR C.I. GRATE & FRAME	3.89	-	3.29
3/F ××	900 SQ CAST IN-SITU GULLY PIT WITH 200mm THICK WALLS & BASE FITTED WITH AN ISOLATION VALVE	900 SQ CLASS 'D' GALV. OR C.I. GRATE & FRAME	3.87	-	3.27
1/G	450 SQ CAST IN-SITU GULLY PIT WITH 200mm THICK WALLS & BASE	450 SQ CLASS 'B' GALV. OR C.I. GRATE & FRAME	3.76	-	3.21
OUT/H	300 DIAM. PRECAST CONCRETE TWIN-CELL PIPE HEADWALL	N/A	3.39	2.55	2.54 ×
1/H	900x600 CAST IN-SITU GULLY PIT WITH 200mm THICK WALLS & BASE	900x600 CLASS 'D' GALV. OR C.I. GRATE & FRAME	3.60	2.64	2.62
2/H	900x600 CAST IN-SITU GULLY PIT WITH 200mm THICK WALLS & BASE	900x600 CLASS 'B' GALV. OR C.I. GRATE & FRAME	3.31	-	2.69
1/J	450 SQ CAST IN-SITU GULLY PIT WITH 200mm THICK WALLS & BASE	450 SQ CLASS 'B' GALV. OR C.I. GRATE & FRAME	3.37	-	2.82

STORMWATER PIT/MANHOLE SCHEDULE					
STRUCTURE No	STRUCTURE DESCRIPTION	GRATE/LID TYPE	SL	IL US	IL DS
OUT/K	30kL DOUBLE WALLED FRP TANK ENVIROTANK MODEL DWT H30	LIDS BY ENVIROTANK	VARIES	FROM 1/K:2.74 FROM 1/N: 2.50	REFER TO P&IDS
1/K	450 SQ CAST IN-SITU GULLY PIT WITH 200mm THICK WALLS & BASE (WATER SEALED)	450 SQ CLASS 'D' GALV. OR C.I. GRATE & FRAME	3.82	3.17	3.15
2/K	450 SQ CAST IN-SITU GULLY PIT WITH 200mm THICK WALLS & BASE (WATER SEALED)	450 SQ CLASS 'D' GALV. OR C.I. GRATE & FRAME	3.82	-	3.32
3/K	450 SQ CAST IN-SITU GULLY PIT WITH 200mm THICK WALLS & BASE (WATER SEALED)	450 SQ CLASS 'D' GALV. OR C.I. GRATE & FRAME	3.38	3.24	3.22
4/K	450 SQ CAST IN-SITU GULLY PIT WITH 200mm THICK WALLS & BASE (WATER SEALED)	450 SQ CLASS 'D' GALV. OR C.I. GRATE & FRAME	3.82	-	3.39
OUT/M	ABOVE GROUND PUMP CONNECTION. REFER P&IDS FOR DETAILS	N/A	4.10	4.10	REFER TO P&IDS
1/M	450 SQ CAST IN-SITU GULLY PIT WITH 200mm THICK WALLS & BASE (WATER SEALED)	450 SQ CLASS 'D' GALV. OR C.I. GRATE & FRAME	3.84	3.58	3.58
2/M	300Wx300Hx12m LONG CAST IN-SITU TRENCH DRAIN WITH 200mm THICK WALLS & BASE	CLASS 'D' GALV. OR C.I. GRATE & FRAME	3.84 TO 3.84	3.64	3.58
3/M	450 SQ CAST IN-SITU GULLY PIT WITH 200mm THICK WALLS & BASE	450 SQ CLASS 'D' GALV. OR C.I. GRATE & FRAME	3.84	-	3.64
1/N	450 SQ CAST IN-SITU GULLY PIT WITH 200mm THICK WALLS & BASE (WATER SEALED)	450 SQ CLASS 'D' GALV. OR C.I. GRATE & FRAME	4.05	3.27	3.05
2/N	450 SQ CAST IN-SITU GULLY PIT WITH 200mm THICK WALLS & BASE (WATER SEALED)	450 SQ CLASS 'D' GALV. OR C.I. GRATE & FRAME	4.05	-	3.45

× EXISTING LEVELS TO BE CONFIRMED ONSITE PRIOR TO START OF CONSTRUCTION WORKS.
×× PIT TO BE FITTED WITH A 200mm WIDE x 200mm HIGH PENSTOCK VALVE MODEL ZWA INSTALLED STRICTLY AS PER MANUFACTURER RECOMMENDATIONS
××× PIT TO BE FITTED WITH A 225mm WIDE x 225mm HIGH PENSTOCK VALVE MODEL ZWA INSTALLED STRICTLY AS PER MANUFACTURER RECOMMENDATIONS
×××× REFER TO MECHANICAL SET FOR ETHANOL SPILL LINE PUMP SYSTEM TO BE INSTALLED IN THIS PIT

PIPE TRENCHING NOTES:

1. EMBEDMENT ZONE MATERIAL: 5mm OR 10mm SCREENINGS, OR ALTERNATIVELY WASHED SCREENED BEDDING SAND TO GRADING SPECIFIED BELOW TO BED ZONE.

SIEVE SIZE (mm)	PASSING (% BY MASS)
19.0	100
2.36	40-100
0.425	15-70
0.075	3-30

2. BACKFILL TO CONSIST OF APPROVED SUBGRADE REPLACEMENT MATERIAL WITH A MINIMUM CALIFORNIA BEARING RATIO OF 15, PLACED IN 150mm LAYERS AND COMPACTED UNTIL THE DRY DENSITY IS NOT LESS THAN 98% STANDARD MAXIMUM DRY DENSITY.
3. COMPACTED BACKFILL SHALL BE GRANULAR FILL COMPRISING CRUSHED ROCK (75mm MAXIMUM SIZE, NON PLASTIC OPEN GRADED MATERIAL) OR CRUSHER RUN RECYCLED CONCRETE. WHERE APPROVED UNDER SPECIAL CIRCUMSTANCES, STABILISED SAND (1 PART CEMENT TO 12 PARTS SAND BY VOLUME) OR CONTROLLED LOW STRENGTH MATERIAL OR LEAN MIX CONCRETE OR CLASS 3 MATERIAL MAY BE BE PERMITTED.
4. COMPACTED BACKFILL UNDER FOOTPATHS AND BIKEWAYS: EXCAVATED MATERIALS MAY BE USED PROVIDED ADEQUATE COMPACTION CAN BE OBTAINED. ALTERNATIVELY USE GRANULAR FILL OR SAND.
5. WHERE APPROVED, SELECTED MATERIAL FROM EXCAVATIONS SHALL BE PLACED IN 150mm LAYERS & COMPACTED TO A MINIMUM CONSOLIDATION OF 98% STANDARD COMPACTION.
6. INCREASE EXCAVATION LOCALLY AT SPIGOT AND SOCKET JOINTS (RIGID PIPES) TO ENSURE MINIMUM BOTTOM COVER AS SHOWN.

TENDER ONLY
NOT FOR CONSTRUCTION

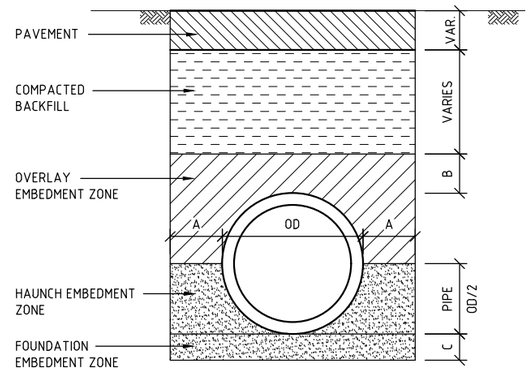

PIPE TRENCH DETAIL (TYPICAL)
NTS

PIPE TRENCH TABLE			
PIPEØ	A	B	C
≥75 ≤150	100	100	75
>150 <300	150	150	100
≥300 ≤450	300	150	100
>450 ≤900	300	150	100
>900 ≤1500	300	200	100
>1500 ≤4000	0.25 x OD	300	150

PROJECT MANAGERS | PLANNERS | DESIGNERS | ENGINEERS

TfA Project Group

Copyright TfA Group Pty Ltd
This drawing including design & information is covered by Copyright and all rights are reserved. This document may not be copied, reproduced, retained or disclosed to any unauthorised person, either wholly or in part, without prior consent in writing from TfA Group Pty Ltd.
ACN 612 132 233
Ph: 61 7 3854 2900 Aust Wide: 1300 794 300
Email: enquiry@tfa.com.au Web: www.TFA.com.au

REV	DATE	BY	DESCRIPTION	CHK	APP
A	02.09.2021	LS	ISSUED FOR TENDER		

PROJECT CLIENT: MANILDRA GROUP 100% AUSTRALIAN OWNED

PROJECT DETAILS: MANILDRA GROUP
PORT KEMBLA
BULK LIQUIDS FACILITY
FORESHORE ROAD
PORT KEMBLA, NSW

DRAWING TITLE: STORMWATER PIT SCHEDULE & CONSTRUCTION DETAILS

STATUS: TENDER

DATE CREATED	ORIGINAL SCALE	SHEET
02.09.2021	NTS	A3

DO NOT SCALE THIS DRAWING. CONFIRM ALL DIMENSIONS ON SITE.

DRAWING NO	REV
20399-C04	A

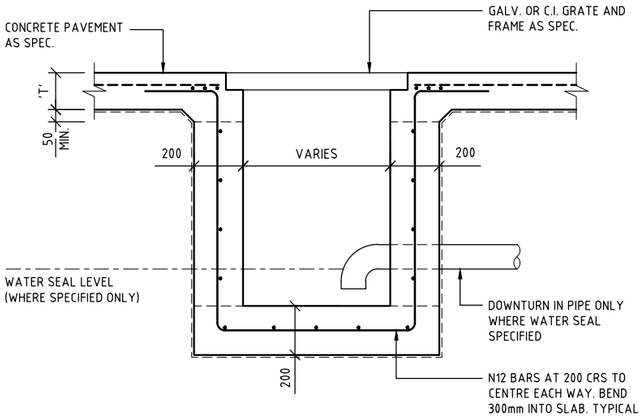

TYPICAL CAST IN-SITU PIT DETAIL

SCALE 1 : 25
(REFER TO PIT SCHEDULE FOR GULLY PIT SIZES)

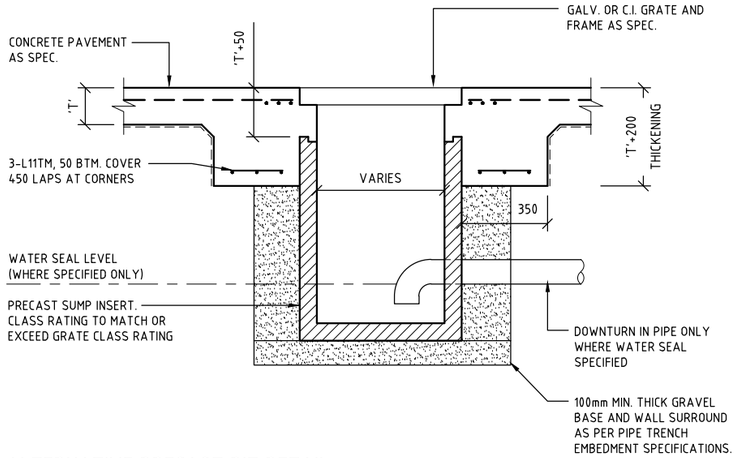

ALTERNATIVE PRECAST PIT DETAIL CLASS 'C' & CLASS 'D' GRATES

SCALE 1 : 25
(REFER TO PIT SCHEDULE FOR GULLY PIT SIZES)

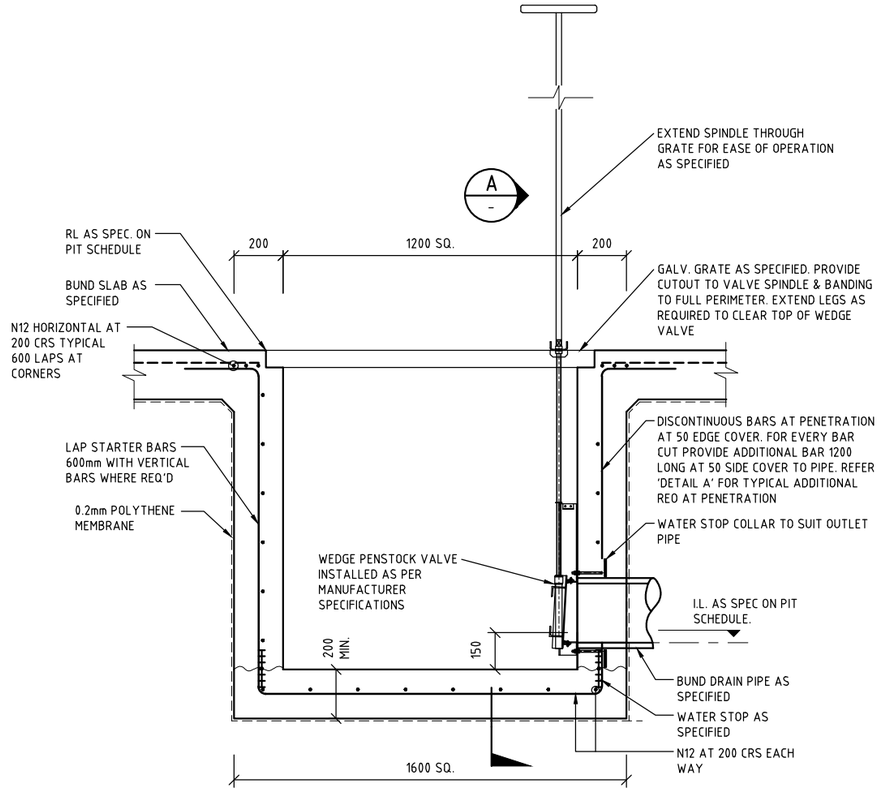

TYPICAL CAST IN-SITU GULLY PIT WITH PENSTOCK VALVE DETAIL

SCALE 1 : 25
(REFER TO PIT SCHEDULE FOR GULLY PIT SIZES)

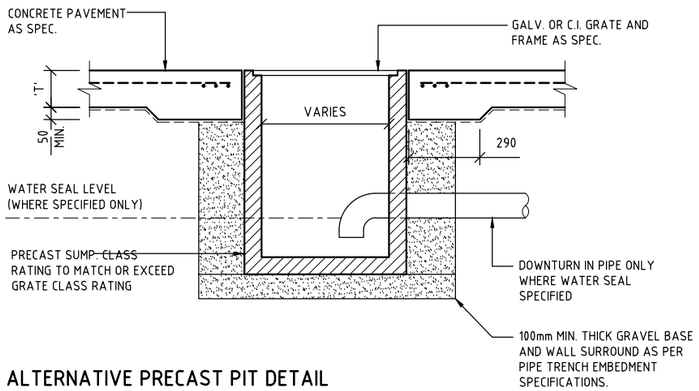

ALTERNATIVE PRECAST PIT DETAIL CLASS 'B' GRATE

SCALE 1 : 25
(REFER TO PIT SCHEDULE FOR GULLY PIT SIZES)

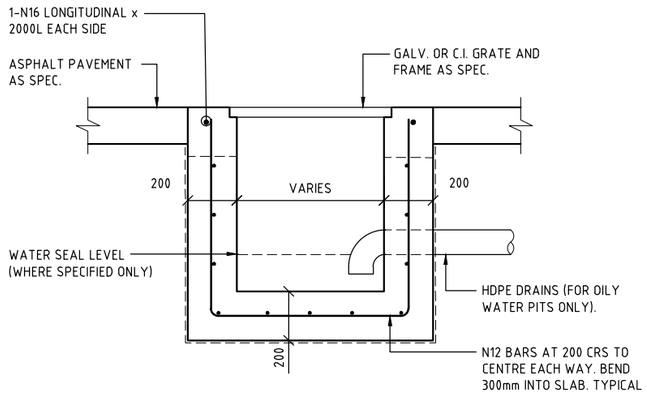

TYPICAL CAST IN-SITU PIT DETAIL

SCALE 1 : 25
(REFER TO PIT SCHEDULE FOR GULLY PIT SIZES)

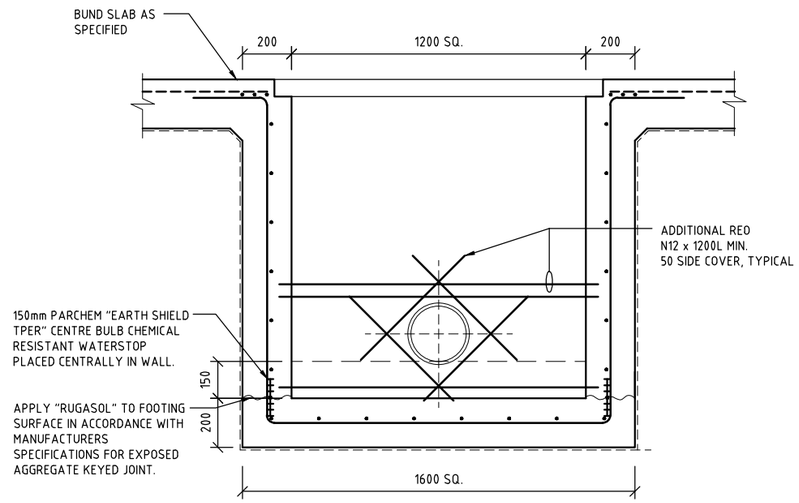

A
-
TYPICAL REINFORCEMENT DETAIL

1 : 25

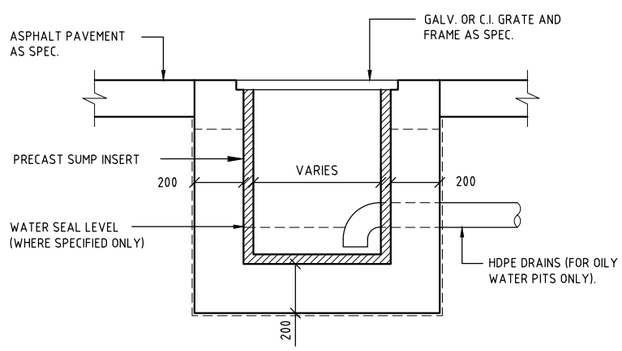

ALTERNATIVE PRECAST PIT DETAIL

SCALE 1 : 25
(REFER TO PIT SCHEDULE FOR GULLY PIT SIZES)

TENDER ONLY
NOT FOR CONSTRUCTION

250 0 500 1000 1250mm
Millimetres

REV	DATE	BY	DESCRIPTION	CHK	APP
A	19.11.2021	LS	ISSUED FOR TENDER		

PROJECT MANAGERS | PLANNERS | DESIGNERS | ENGINEERS

TFA Project Group

Copyright TfA Group Pty Ltd
This drawing including design & information is covered by Copyright and all rights are reserved. This document may not be copied, reproduced, retained or disclosed to any unauthorised person, either wholly or in part, without prior consent in writing from TfA Group Pty Ltd.
ACN 612 132 233
Ph: 61 7 3854 2900 Aust Wide: 1300 794 300
Email: enquiry@tfa.com.au Web: www.TFA.com.au

PROJECT CLIENT: MANILDRA GROUP 100% AUSTRALIAN OWNED

PROJECT DETAILS: MANILDRA GROUP
PORT KEMBLA
BULK LIQUIDS FACILITY
FORESHORE ROAD
PORT KEMBLA, NSW

DRAWING TITLE: PIT CONSTRUCTION DETAILS

STATUS: TENDER

DATE CREATED	ORIGINAL SCALE	SHEET
02.09.2021	1:25	A3

DO NOT SCALE THIS DRAWING. CONFIRM ALL DIMENSIONS ON SITE.

DRAWING NO	REV
20399-C05	A

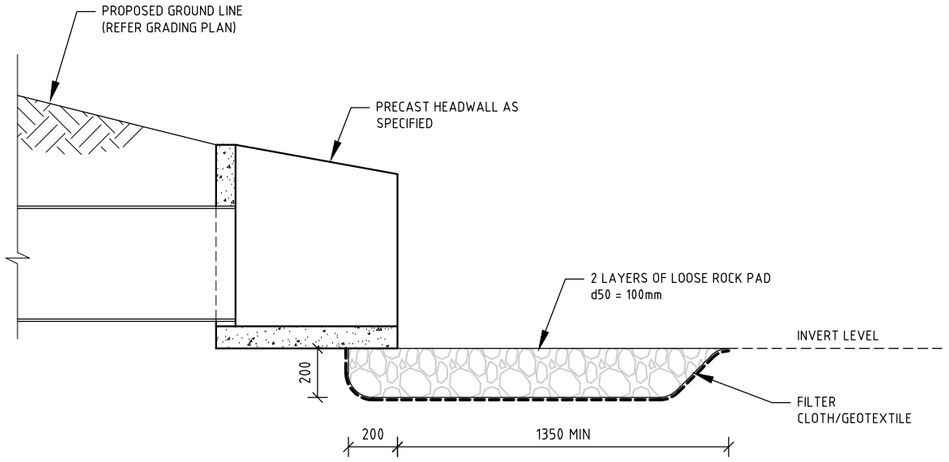

B / - OUTLET PROTECTION SECTION DETAIL
1 : 40

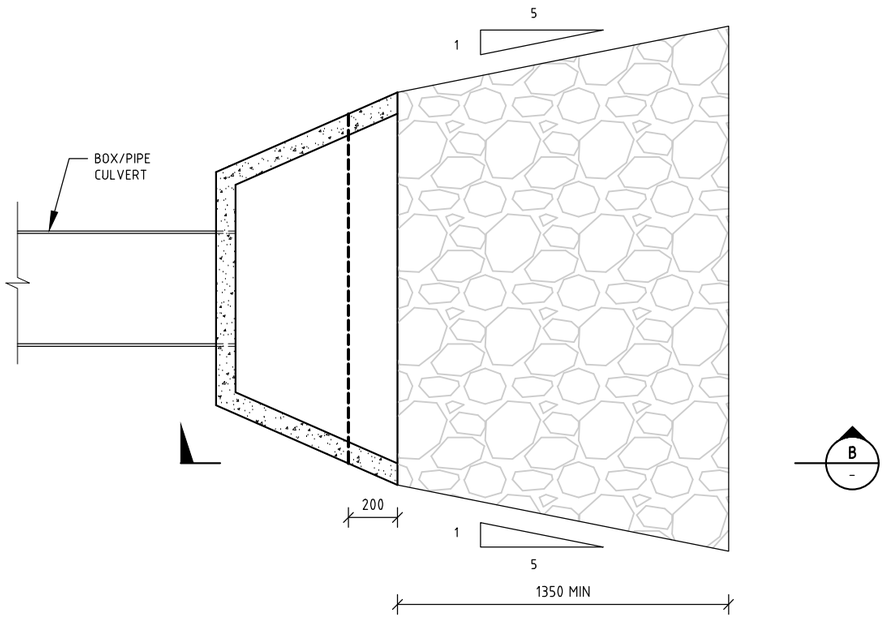

TYPICAL OUTLET PROTECTION DETAIL
SCALE 1 : 25
(REFER TO DRW C02, C03 & C04 FOR HEADWALL SIZES)

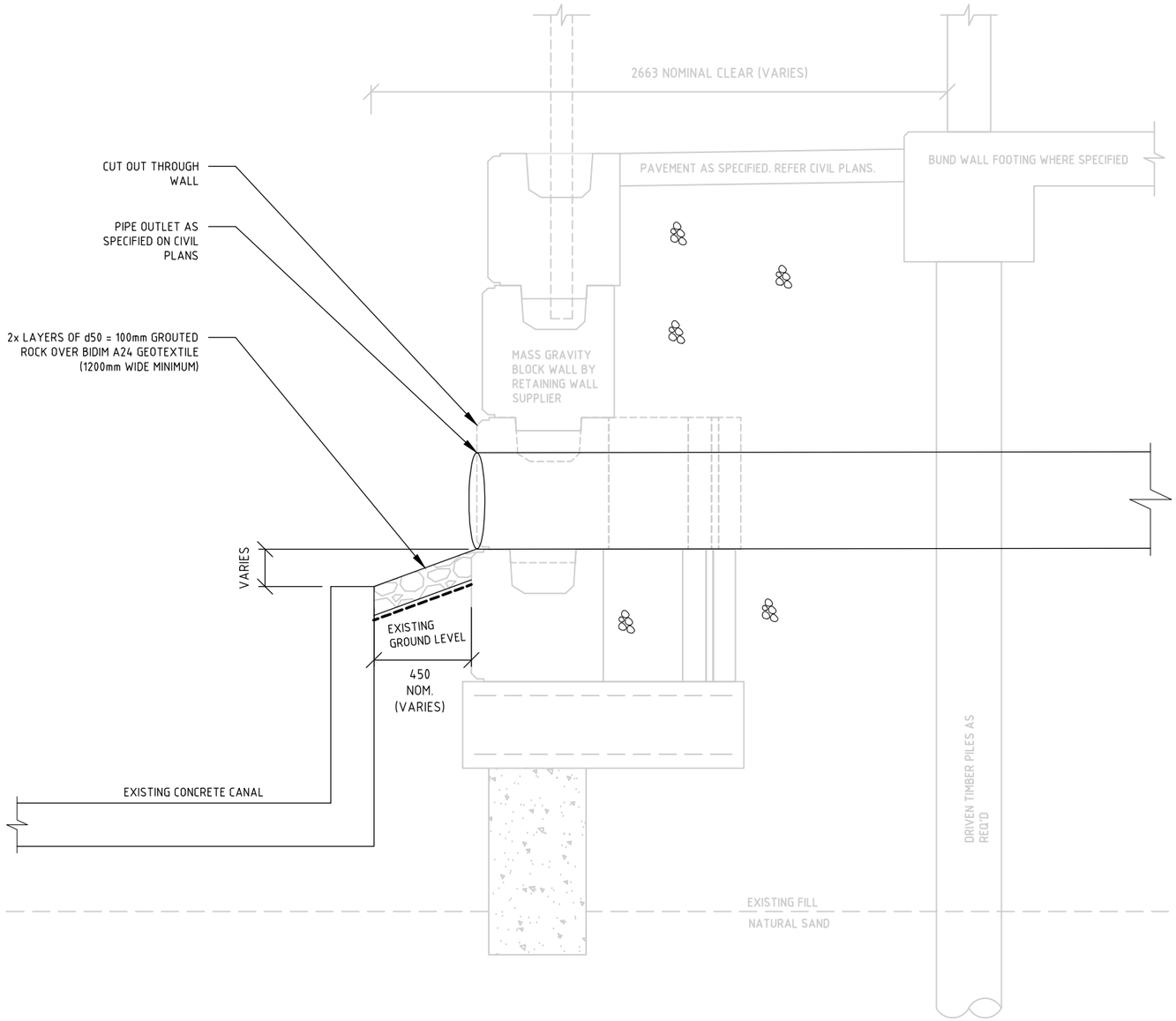

PIPE OUTLET DETAIL
SCALE 1:25

TENDER ONLY
NOT FOR CONSTRUCTION

250 0 500 1000 1250mm
Millimetres

PROJECT MANAGERS | PLANNERS | DESIGNERS | ENGINEERS

TFA Project Group

Copyright TfA Group Pty Ltd
This drawing including design & information is covered by Copyright and all rights are reserved. This document may not be copied, reproduced, retained or disclosed to any unauthorised person, either wholly or in part, without prior consent in writing from TfA Group Pty Ltd.
ACN 612 132 233
Ph: 61 7 3854 2900 Aust Wide: 1300 794 300
Email: enquiry@tfa.com.au Web: www.TFA.com.au

REV	DATE	BY	DESCRIPTION	CHK	APP
A	22.11.2021	LS	ISSUED FOR TENDER		

PROJECT CLIENT: MANILDRA GROUP 100% AUSTRALIAN OWNED

PROJECT DETAILS: MANILDRA GROUP
PORT KEMBLA
BULK LIQUIDS FACILITY
FORESHORE ROAD
PORT KEMBLA, NSW

DRAWING TITLE: DISCHARGE OUTLET CONSTRUCTION DETAILS

STATUS: TENDER

DATE CREATED	ORIGINAL SCALE	SHEET
22.11.2021	1:25	A3

DO NOT SCALE THIS DRAWING. CONFIRM ALL DIMENSIONS ON SITE.

DRAWING NO	REV
20399-C06	A

TENDER ONLY
NOT FOR CONSTRUCTION

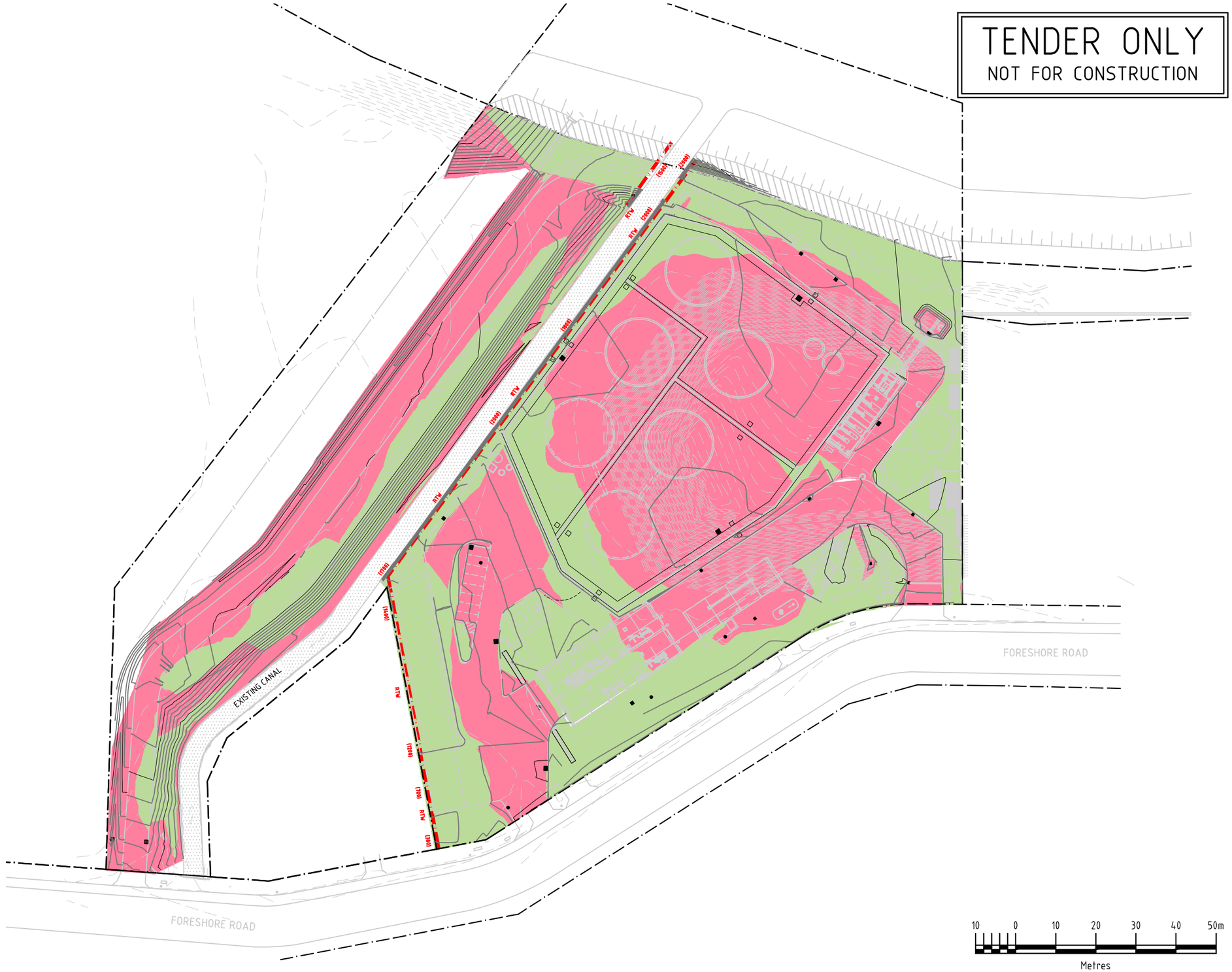

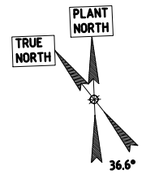

LEGEND

- PROPERTY BOUNDARY
- PROPOSED RETAINING WALL. REFER STRUCTURAL DRAWINGS FOR DETAILS
- 3.50 PROPOSED EARTHWORKS LEVEL CONTOUR (0.2m INTERVALS)
- EXISTING LEVEL CONTOUR (0.25m INTERVALS)
- (800) APPROXIMATE RETAINING WALL HEIGHT
- ESTIMATED CUT AREA
- ESTIMATED FILL AREA

EARTHWORKS VOLUME:

TOTAL CUT (APPROX.)	=2,422m³
TOTAL FILL (APPROX.)	=3,429m³
REQUIRED FILL	=1,007m³

NOTES:

1. RETAINING WALL TO BE TERMINATED 150mm ABOVE BULK EARTHWORKS SURFACE

10 0 10 20 30 40 50m
Metres

PROJECT MANAGERS | PLANNERS | DESIGNERS | ENGINEERS

TFA Project Group

Copyright TfA Group Pty Ltd
This drawing including design & information is covered by Copyright and all rights are reserved. This document may not be copied, reproduced, retained or disclosed to any unauthorised person, either wholly or in part, without prior consent in writing from TfA Group Pty Ltd.
ACN 612 132 233
Ph: 61 7 3854 2900 Aust Wide: 1300 794 300
Email: enquiry@tfa.com.au Web: www.TFA.com.au

REV	DATE	BY	DESCRIPTION	CHK	APP
A	22.11.2021	LS	ISSUED FOR TENDER		

PROJECT CLIENT: MANILDRA GROUP 100% AUSTRALIAN OWNED

PROJECT DETAILS: MANILDRA GROUP, PORT KEMBLA, BULK LIQUIDS FACILITY, FORESHORE ROAD, PORT KEMBLA, NSW

DRAWING TITLE: BULK EARTHWORKS PLAN

STATUS: TENDER

DATE CREATED	ORIGINAL SCALE	SHEET
22.11.2021	1:1000	A3

DO NOT SCALE THIS DRAWING. CONFIRM ALL DIMENSIONS ON SITE.

DRAWING NO	REV
20399-C07	A

CONSTRUCTION EXIT - ROCK PAD

MATERIALS:

1. ROCK : WELL GRADED, HARD, ANGULAR, EROSION RESISTANT ROCK, NOMINAL DIAMETER OF 50 TO 75mm (SMALL DISTURBANCES) OR 100 TO 150mm (LARGE DISTURBANCES). ALL REASONABLE MEASURES MUST BE TAKEN TO OBTAIN ROCK OF NEAR UNIFORM SIZE.
2. FOOTPATH STABILISING AGGREGATE : 25 TO 50mm GRAVEL OR AGGREGATE.
3. GEOTEXTILE FABRIC : HEAVY-DUTY, NEEDLE -PUNCHED, NON-WOVEN FILTER CLOTH ('BIDIM' A24 OR EQUIVALENT).

INSTALLATION:

1. CLEAR THE LOCATION OF THE ROCK PAD, REMOVING STUMPS, ROOTS & OTHER VEGETATION TO PROVIDE A FIRM FOUNDATION SO THAT THE ROCK IS NOT PRESSED INTO SOFT GROUND. CLEAR SUFFICIENT WIDTH TO ALLOW PASSAGE OF LARGE VEHICLES, BUT CLEAR ONLY THAT NECESSARY FOR THE EXIT. DO NOT CLEAR ADJACENT AREAS UNTIL THE REQUIRED EROSION & SEDIMENT CONTROL DEVICES ARE IN PLACE.
2. IF THE EXPOSED SOIL IS SOFT, PLASTIC OR CLAYEY, PLACE A SUB-BASE OF CRUSHED ROCK OR A LAYER OF HEAVY-DUTY FILTER CLOTH TO PROVIDE A FIRM FOUNDATION.
3. PLACE THE ROCK PAD FORMING A MINIMUM 200mm THICK LAYER OF CLEAN, OPEN-VOID ROCK.
4. IF THE ASSOCIATED CONSTRUCTION SITE IS UP-SLOPE OF THE ROCKPAD, THUS CAUSING STORMWATER RUNOFF TO FLOW TOWARD THE ROCK PAD, THEN FORM A MINIMUM 300mm HIGH FLOW CONTROL BERM ACROSS THE ROCK PAD TO DIVERT SUCH RUNOFF TO A SUITABLE SEDIMENT TRAP.
5. THE LENGTH OF THE ROCK PAD SHOULD BE AT LEAST 15m WHERE PRACTICABLE, & AS WIDE AS THE FULL WIDTH OF THE ENTRY OR EXIT & AT LEAST 3m. THE ROCK PAD SHOULD COMMENCE AT THE EDGE OF THE OFF-SITE SEALED ROAD OR PAVEMENT.
6. FLARE THE END THE ROCK PAD WHERE IT MEETS THE PAVEMENT SO THAT THE WHEELS OF TURNING VEHICLES DO NOT TRAVEL OVER UNPROTECTED SOIL.
7. IF THE FOOTPATH IS OPEN TO PEDESTRIAN MOVEMENT, THEN COVER THE COARSE ROCK WITH FINE AGGREGATE OR GRAVEL, OR OTHERWISE TAKE WHATEVER MEASURES ARE NEEDED TO MAKE THE AREA SAFE.

NOTES:

1. **EROSION AND SEDIMENT CONTROL MEASURES ARE TO BE DESIGNED AND INSTALLED IN ACCORDANCE WITH THE INTERNATIONAL EROSION CONTROL ASSOCIATION AUSTRALASIA (I.E.C.A.) - "BEST PRACTICE FOR EROSION AND SEDIMENT CONTROL." REFER STANDARD DRAWINGS BY I.E.C.A. FOR DETAILED CONSTRUCTION METHODOLOGY AND REQUIREMENTS.**
2. **REFER TO DESIGN ENGINEER IF CONSTRUCTION ENTRY/EXIT IS TO BE RELOCATED.**

TENDER ONLY
NOT FOR CONSTRUCTION

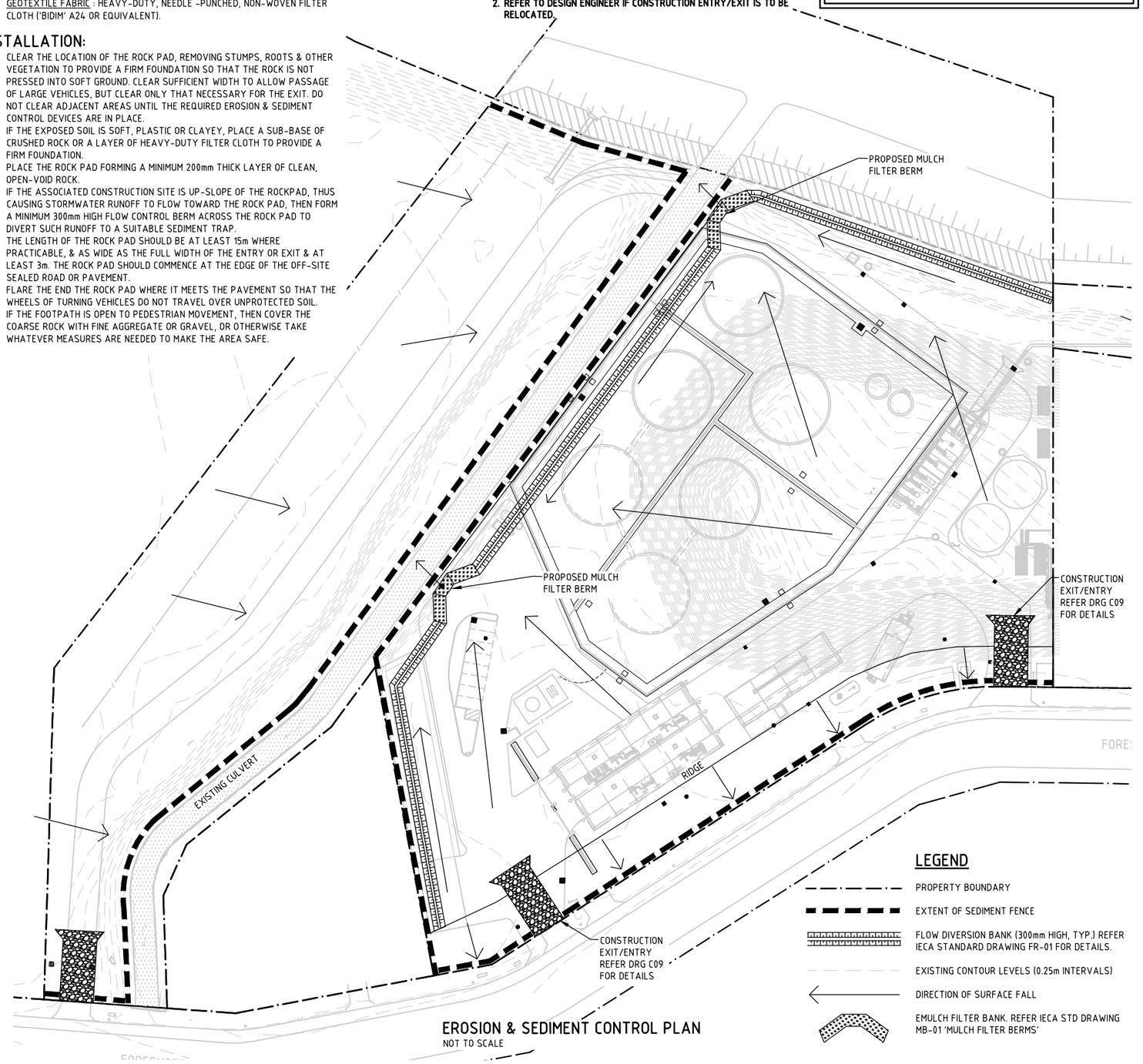

EROSION & SEDIMENT CONTROL PLAN
NOT TO SCALE

SEDIMENT AND EROSION CONTROL NOTES:

1. ALL THE SEDIMENT & EROSION CONTROL MEASURES TO BE IN ACCORDANCE WITH LOCAL COUNCIL'S GUIDE LINES.

PRIOR TO THE COMMENCEMENT OF CONSTRUCTION:

1. AVOID STRIPPING & EXCAVATING UNTIL READY TO BUILD .
2. INSTALL SEDIMENT FENCES .

SPECIFICATION:

1. SILT FENCE SHALL NOT BE REMOVED UNTIL SITE HAS BEEN PAVED & SURFACED.
2. BUND WALLS SHALL BE LOCATED AROUND ALL PITS & MAINTAINED UNTIL THE CATCHMENT AREA HAS BEEN PAVED.
3. KERB DRAIN EXCLUDER SHALL INCORPORATE TRAFFIC CONTROL BARRICADES IN ACCORDANCE WITH AS1742.3 - 1985, & SHALL NOT BE PLACED UNTIL WORKS ARE BEING CARRIED OUT ON THE FOOTPATH AREA, OR AS OTHERWISE DIRECTED BY COUNCIL.
4. ALL SEDIMENT TRAPS, EXCLUDERS, BUND WALLS SHALL BE INSPECTED & CLEANED AFTER EACH STORM EVENT. DAMAGED OR CLOGGED BUNDING ARE TO BE REMOVED AND REPLACED.
5. THE BUILDER SHALL CARRY OUT ANY ADDITIONAL WORKS DEEMED NECESSARY AND DIRECTED BY COUNCIL TO BE CARRIED OUT.
6. THE SEDIMENT CONTROL PLAN SHALL BE IMPLEMENTED PRIOR TO ANY WORKS BEING CARRIED OUT ON SITE.

HOLD POINTS:

INSPECTION OF EROSION AND SEDIMENT CONTROL DEVICES MUST BE UNDERTAKEN BY THE SUPERVISING OR SUPERINTENDENT ENGINEER AT A MINIMUM AT THE FOLLOWING HOLD POINTS:

1. PRIOR TO COMMENCEMENT OF BULK EARTHWORKS.
2. PRIOR TO LIVE CONNECTION OF NEW STORMWATER DRAINAGE TO THE EXISTING SYSTEM.
3. PRIOR TO ANY IN STREAM WORKS.
4. PRIOR TO ON MAINTENANCE OR OFF MAINTENANCE INSPECTION.
5. AT INTERVALS NOT EXCEEDING ONE MONTH.

COPIES OF INSPECTION REPORTS SHALL BE KEPT ON SITE.

SEDIMENT BARRIERS:

SEDIMENT FENCE

- INSTALL SEDIMENT FENCE(S) ALONG THE LOW SIDE OF THE SITE, AND IDEALLY ALONG A LINE OF CONSTANT LAND LEVEL TO PREVENT THE CONCENTRATION OF STORMWATER RUNOFF.
  IN AREAS WHERE IT IS EITHER UNDESIRABLE OR IMPRACTICAL TO BURY THE LOWER EDGE OF THE SEDIMENT FENCE, THE LOWER 200mm (MIN) PORTION OF THE FABRIC SHOULD BE PLACED O THE GROUND UP-SLOPE OF THE FENCE AND BURIED UNDER A 100mm (MIN)LAYER OF AGGREGATE.
  SEDIMENT FENCES ON BUILDING SITES CAN BE STAPLED TO APPROXIMATELY 40mm SQUARE HARDWOOD POSTS OR WIRE TIED TO STEEL POSTS.

FIELD INLET GULLIES

- SEDIMENT CONTROLS FOR STORMWATER INLETS LOCATED WITHIN THE PROPERTY BOUNDARIES MAY CONSIST OF GEOTEXTILE FABRIC PLACED EITHER DIRECTLY OVER THE GRATED INLET OR AROUND THE INLET SUPPORT BY A TIMBER FRAME. FIELD INLET PROTECTION IS NECESSARY WHERE INLETS DRAIN AREAS OF BARE AND UNPROTECTED SOIL. DURING STORMS, PONDING SHOULD BE ALLOWED TO OCCUR AROUND THE STORMWATER INLET TO ASSIST IN THE SETTING OUT OF SEDIMENTS.

PAVEMENT INLET GULLY

- A ROADSIDE INLET BARRIER IS TO BE INSTALLED, SO THAT IT SHOULD NOT BE ALLOWED TO FULLY BLOCK THE INLET STRUCTURE. ON A HILLSIDE, SEDIMENT BARRIERS MAY CONSIST OF A TEMPORARY DAM CONSTRUCTED FROM SAND AND GRAVEL BAGS AT LEAST 4 METRES UP SLOPE FROM THE GULLY INLET.

BUILDING OPERATIONS:

1. ERODABLE MATERIAL MISTAKENLY PLACED WITHIN THE ROAD RESERVE (INCLUDING ACCIDENTAL SPILLAGE AND TRACKING OF SUCH MATERIALS ONTO THE ROAD) THAT CAN NOT BE PREVENTED THROUGH REASONABLE MEANS, MUST BE:
   (a) REMOVED IMMEDIATELY IF RAINFALL IS IMMINENT OR OCCURRING.
   (b) REMOVED PRIOR TO THE END OF THE DAY'S WORK IF RAINFALL NOT EXPECTED. MATERIALS SHOULD BE SWEPT FROM THE ROAD, NOT WASHED DOWN THE GUTTER.
2. ALL SOLID WASTE SHOULD BE STORED ON SITE IN SUCH A MANNER THAT IT IS PREVENTED FROM LEAVING THE SITE EITHER BY THE ACTION OF WIND OR WATER.
3. SMALLER MATERIALS, SUCH AS LITTER, SHOULD BE CONTAINED IN COVERED BINS OR LITTER TRAPS FORMED ON THREE SIDES BY A GEOTEXTILE WIND BREAK.
4. CONCRETE WASTE WASTED FROM TRUCKS AND MIXERS UNITS SHALL BE CONTAINED ON SITE AND SHALL NOT BE PLACED IN A POSITION WHERE IT COULD REASONABLY BE EXPECTED TO WASH FROM THE SITE AND HARM THE ENVIRONMENT.
5. DUST SUPPRESSION OPERATIONS SHALL BE UNDERTAKEN TO MINIMISE THE RISK OF DUST RISE, INCLUDING WATER TRUCKS, MULCHING, EROSION CONTROL BLANKETS, SOIL BINDERS, VEHICLE SPEED LIMITS & STOCKPILE STABILISATION.

BULK EARTHWORKS:

1. AVOID STRIPPING & EXCAVATING UNTIL READY TO BUILD.
2. CONSTRUCTION OF AN ENTRY/EXIT POINT TO THE SITE SHOULD BE MANAGED SO THAT SEDIMENT IS NOT TRACKED OFF THE SITE.
3. TOP SOIL SHOULD BE STOCKPILED ON SITE FOR LATER USE.
4. WHERE PRACTICABLE MAINTAIN KERB VEGETATION IN A HEALTHY STATE DURING THE CONSTRUCTION PROGRESS.
5. WHEN UP SLOPE WATER IS DIVERTED AROUND A WORK SITE IT IDEALLY SHOULD BE DISCHARGED AS SHEET FLOW THROUGH AN UNDISTURBED AREA BESIDE THE WORKS.

STOCKPILES:

1. STOCKPILES ARE NOT TO BE STORED ON THE FOOTPATH OR THE ROAD RESERVE.
2. WHERE NECESSARY STOCKPILE LOSSES CAN BE MINIMISED WITH THE USE OF COVERS.
3. ALL STOCKPILES AND BUILDING MATERIAL SHOULD BE LOCATED WITHIN SEDIMENT CONTROL ZONE.
4. TO MINIMISE EROSION AND THE LOSS OF SAND AND SOIL, STOCKPILES SHOULD BE NOT LOCATED WITHIN AN OVERLAND FLOW PATH. IF IT IS IMPRACTICAL TO AVOID STORMWATER RUNOFF BEING DIRECTED TO A STOCKPILE, THEN A PERIMETER BANK SHALL BE CONSTRUCTED UP SLOPE OF THE STOCKPILE TO DIRECT RUNOFF IN A CONTROLLED MANNER AROUND THE STOCKPILE.

GENERAL MAINTENANCE:

1. SEDIMENT FENCES SHOULD BE REPLACED IF THE FABRIC IS RIPPED OR OTHERWISE DAMAGED. THE MAINTENANCE OF THE SEDIMENT FENCES INCLUDES THE REMOVAL OF SEDIMENT DEPOSITED UP SLOPE OF THE FENCE AND RETRENCHING THE FABRIC WHEN THE FENCE IS 25% FULL.
2. FOLLOWING STORM EVENTS, THE ROAD RESERVE AND ALL SEDIMENT BARRIERS SHOULD BE INSPECTED AND ANY EXCESSIVE RESIDUE SHOULD BE APPROPRIATELY REMOVED.

SITE REHABILITATION:

1. ALL GROUND DISTURBED BY THE CONSTRUCTION ACTIVITY SHOULD BE PROMPTLY AND PROGRESSIVELY STABILISED SO IT CAN NO LONGER ACT AS A SOURCE OF SEDIMENT.

SERVICES TRENCHES:

1. TO AVOID UNNECESSARY SOIL EROSION, SERVICE TRENCHES SHOULD BE BACK FILLED, CAPPED AND COMPACTED TO A LEVEL AT LEAST 75-100mm ABOVE THE ADJOINING GROUND LEVEL.

OPERATION & MAINTENANCE

1. EROSION & SEDIMENT CONTROL MEASURES SHALL BE INSPECTED:
   A. DAILY (WHEN WORK IS OCCURRING ON SITE) OR WEEKLY (WHEN WORK IS NOT OCCURRING ON SITE)
   B. WITHIN 24 HOURS OF EXPECTED RAIN
   C. WITHIN 18 HOURS OF A RAINFALL EVENT (ie AN EVENT OF SUFFICIENT INTENSITY AND DURATION TO CAUSE RUNOFF).
2. EROSION & SEDIMENT CONTROL MAINTENANCE MEASURES SHALL BE TRIGGERED WHEN THE CAPACITY OF THE MEASURE FALLS BELOW 75%. THE MAINTENANCE SHALL BE PERFORMED BY THE END OF THE DAY.
3. PRIOR TO LONG PERIODS OF SHUT DOWN (GREATER THAN 5 DAYS) THE SITE SHALL EITHER TO BE PROVIDED WITH TEMPORARY GROUND COVER (AT LEAST 70% EFFECTIVE COVER) OR HAVE ALL EROSION AND SEDIMENT CONTROL MEASURES TO BE CONTINUALLY OPERATED DURING THE SHUTDOWN, INCLUDING ONGOING MONITORING AND SEDIMENT BASIN CLEANOUTS.
4. SHUTDOWN PERIODS IN EXCESS OF 3 MONTHS ARE TO HAVE 100% LONG TERM SITE COVERAGE SUCH AS HYDROMULCH OR GEOFABRIC.
5. STORMWATER RELEASE LIMITS:
   ALL RELEASES OF STORMWATER CAPTURED ON-SITE, UNLESS OTHERWISE NOTED MUST NOT EXCEED THE FOLLOWING LIMITS:
   A. 50mg/L OF TOTAL SUSPENDED SOLIDS (TSS) AS A MAXIMUM CONCENTRATION.
   B. TURBIDITY (NTU) VALUE LESS THAN 10% ABOVE BACKGROUND
   C. pH VALUE MUST BE IN THE RANGE 6.5 TO 8.5 EXCEPT WHERE, AND TO THE EXTENT THAT, THE NATURAL RECEIVING WATERS LIE OUTSIDE THIS RANGE.
6. WEATHER FORECASTS SHALL BE MONITORED AND IN THE EVENT OF HEAVY RAIN FORECAST ALL MAINTENANCE AND PREVENTION METHODS SHALL BE IMPLEMENTED

STOCKPILE MANAGEMENT

SAND MATERIAL:

A. NO COVER REQUIRED WHEN WIND EROSION AND DUST CONTROL IS NOT AN ISSUE
B. SYNTHETIC COVER IS REQUIRED WHEN THE CONTROL OF WIND EROSION IS REQUIRED FOR SAFETY, TO BE INSTALLED BY THE END OF THE DAY.

SOIL MATERIAL

A. NO COVER REQUIRED WHEN WIND EROSION AND DUST CONTROL IS NOT AN ISSUE.
B. MULCHING, CHEMICAL STABILISERS, SOIL BINDERS, IMPERVIOUS BLANKETS OR VEGETATIVE COVER IS REQUIRED WHEN:
   - >28 DAY STOCKPILING OF DISPERSIVE SOILS
   - >28 DAY STOCKPILING OF CLAYEY SOILS WHERE TURBIDITY CONTROL IS DESIRABLE
   - >5/10 DAY STOCKPILING OF SOILS DURING MONTHS OF EXTREME/HIGH EROSION RISK (JAN, FEB, MAR, APR, NOV, DEC)
   - ALL STOCKPILES OF CLAYEY SOILS WHEN TURBIDITY CONTROL IS ESSENTIAL.

PROJECT MANAGERS | PLANNERS | DESIGNERS | ENGINEERS

TfA Project Group

Copyright TfA Group Pty Ltd
This drawing including design & information is covered by Copyright and all rights are reserved. This document may not be copied, reproduced, retained or disclosed to any unauthorised person, either wholly or in part, without prior consent in writing from TfA Group Pty Ltd.
ACN 612 132 233
Ph: 61 7 3854 2900 Aust Wide: 1300 794 300
Email: enquiry@tfa.com.au Web: www.TFA.com.au

REV	DATE	BY	DESCRIPTION	CHK	APP
A	14.09.2021	LS	ISSUED FOR TENDER		
B	23.11.2021	LS	SITE LAYOUT UPDATED		

PROJECT CLIENT: MANILDRA GROUP 100% AUSTRALIAN OWNED

PROJECT DETAILS: MANILDRA GROUP PORT KEMBLA BULK LIQUIDS FACILITY FORESHORE ROAD PORT KEMBLA, NSW

DRAWING TITLE: CONCEPTUAL EROSION & SEDIMENT CONTROL PLAN

STATUS: TENDER

DATE CREATED	ORIGINAL SCALE	SHEET
14.09.2021	AS SHOWN	A3

DO NOT SCALE THIS DRAWING. CONFIRM ALL DIMENSIONS ON SITE.

DRAWING NO	REV
20399-C08	B

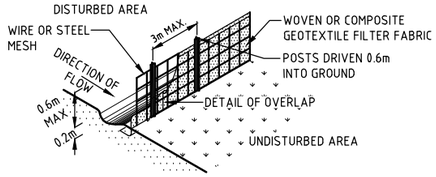

FIG. 1. - SEDIMENT FENCE

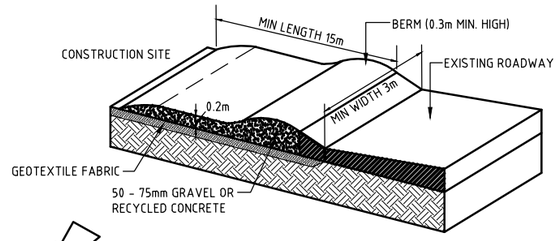

RUNOFF FROM PAD DIRECTED TO SEDIMENT TRAP.

FIG. 2. - CONSTRUCTION EXIT/ENTRY

MAINTENANCE:

1. THE ENTRANCE SHOULD BE MAINTAINED SO THAT IT PREVENTS TYRES FROM TRACKING.
2. DRESSING WITH ADDITIONAL AGGREGATE IF REQUIRED.
3. REGULARLY REMOVE SEDIMENT FROM ROADWAY.

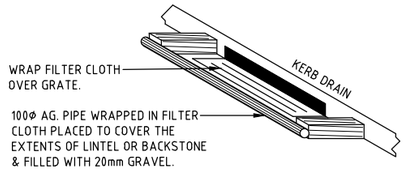

KERB INLET PROTECTION DETAIL

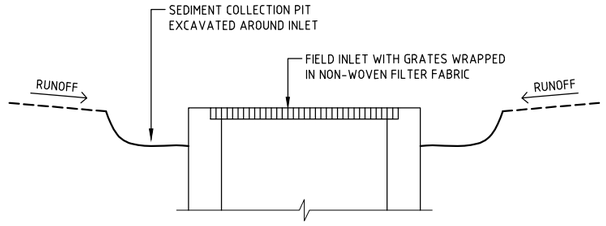

GRATED INLET SEDIMENT TRAP DETAIL

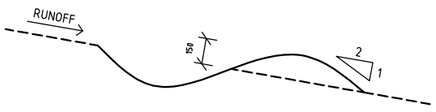

CATCH DRAIN DETAIL

CATCH DRAINS TO BE RUN AT MAX. 0.5% GRADE

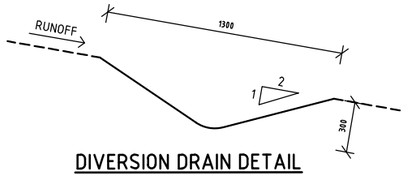

DIVERSION DRAIN DETAIL

DIVERSION DRAIN TO BE LINE WITH GEOFABRIC

LEVEL SPREADER INSTALLATION:

1. THE OUTLET SILL OF THE SPREADER SHOULD BE PROTECTED WITH EROSION CONTROL MATTING TO PREVENT EROSION DURING THE ESTABLISHMENT OF VEGETATION. THE MATTING SHOULD BE A MINIMUM OF 1200mm WIDE EXTENDING AT LEAST 300mm UPSTREAM OF THE EDGE OF THE OUTLET CREST & BURIED AT LEAST 150mm IN A VERTICAL TRENCH. THE DOWNSTREAM EDGE SHOULD BE SECURELY HELD IN PLACE WITH CLOSELY SPACED HEAVY-DUTY WIRE STAPLES AT LEAST 150mm LONG.
2. ENSURE THAT THE OUTLET SILL (CREST) IS LEVEL FOR THE SPECIFIED LENGTH.
3. IMMEDIATELY AFTER CONSTRUCTION, TURF, OR SEED & MULCH WHERE APPROPRIATE, THE LEVEL SPREADER.

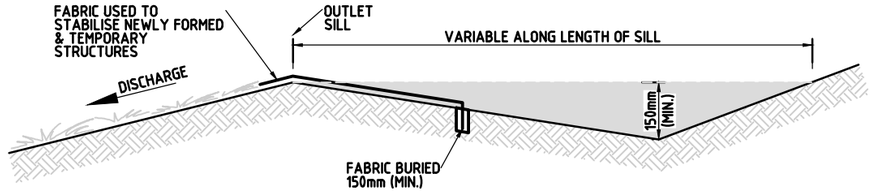

TYPICAL PROFILE OF THE OUTLET WEIR

LEVEL SPREADER

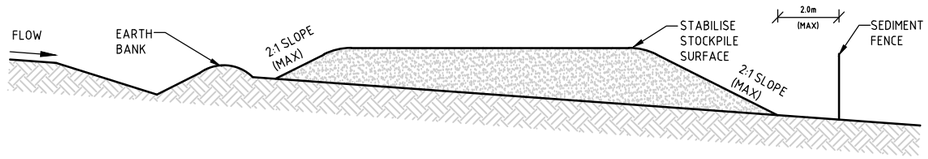

TYPICAL STOCKPILE CONFIGURATION

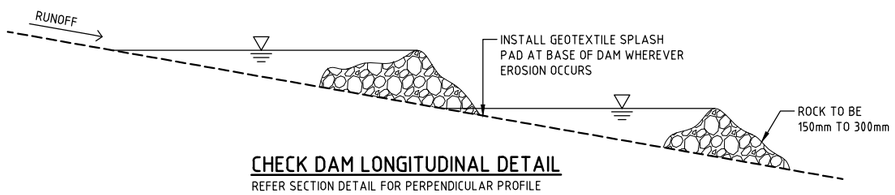

CHECK DAM LONGITUDINAL DETAIL

REFER SECTION DETAIL FOR PERPENDICULAR PROFILE

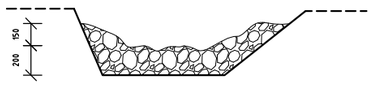

CHECK DAM SECTION DETAIL

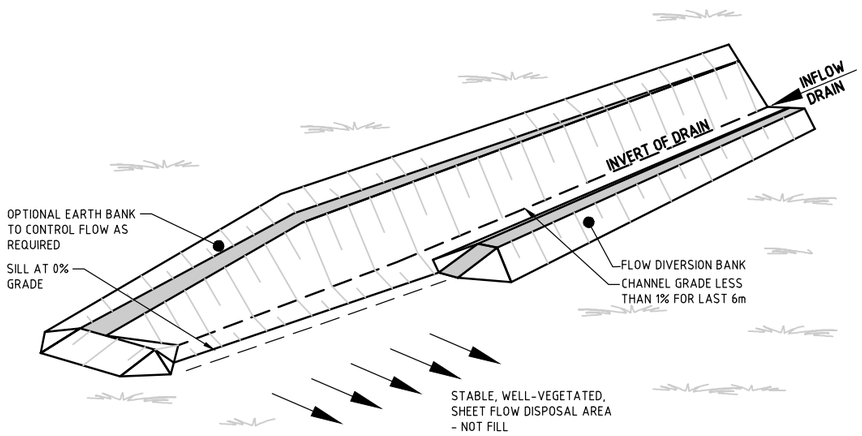

TYPICAL LAYOUT OF LEVEL SPREADER

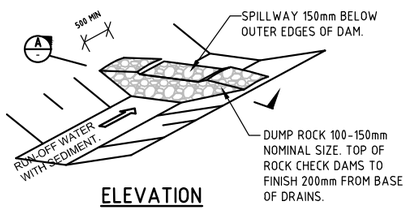

ELEVATION

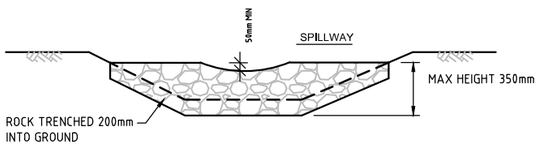

TENDER ONLY
NOT FOR CONSTRUCTION

REV	DATE	BY	DESCRIPTION	CHK	APP
A	14.09.21	LS	ISSUED FOR TENDER		

PROJECT MANAGERS | PLANNERS | DESIGNERS | ENGINEERS

TFA Project Group

Copyright TFA Group Pty Ltd
This drawing including design & information is covered by Copyright and all rights are reserved. This document may not be copied, reproduced, retained or disclosed to any unauthorised person, either wholly or in part, without prior consent in writing from TFA Group Pty Ltd.
ACN 612 132 233
Ph: 617 3854 2900 Aust Wide: 1300 794 300
Email: enquiry@tfa.com.au Web: www.TFA.com.au

PROJECT CLIENT: MANILDRA GROUP — 100% AUSTRALIAN OWNED

PROJECT DETAILS: MANILDRA GROUP, PORT KEMBLA, BULK LIQUIDS FACILITY, FORESHORE ROAD, PORT KEMBLA, NSW

DRAWING TITLE: EROSION & SEDIMENT CONTROL PLAN CONSTRUCTION DETAILS

STATUS: TENDER

DATE CREATED	ORIGINAL SCALE	SHEET
14.09.2021	AS SHOWN	A3

DO NOT SCALE THIS DRAWING. CONFIRM ALL DIMENSIONS ON SITE.

DRAWING NO	REV
20399-C09	A

LEGEND:

K1 200mm HIGH KERB

K 150mm HIGH KERB

BUND FLOOR:
150mm THICK CONCRETE SLAB WITH SL82 MESH AT 50 TOP & BTM.
COVER ON 0.2mm POLYTHENE OVER 50mm CLEAN SAND BEDDING.
JOINTS AT 5m CENTRES TYPICAL WITH "EARTHSHIELD T-PER REAR GUARD WATER STOPS. JOINT SEALANT AS PER TYPICAL DETAIL.
APPROXIMATE AREA 3270m^2

GRAVEL HARDSTAND (REMAINDER OF SITE)
150mm THICK 20mm DRAINAGE GRAVEL
ON GEOFABRIC LINER OVER COMPACTED SUBGRADE.
APPROXIMATE AREA 2800m^2

HEAVY DUTY VEHICLE PAVEMENT:
200mm THICK CONCRETE SLAB WITH SL92 MESH AT 50 TOP COVER
ON 0.2mm POLYTHENE OVER 150mm THICK CBR45 BASE (DGS20)
APPROXIMATE AREA 1490m^2

LIGHT DUTY VEHICLE PAVEMENT:
150mm THICK CONCRETE SLAB WITH SL82 MESH AT 50 TOP COVER
ON 0.2mm POLYTHENE OVER 150mm THICK CBR45 BASE (DGS20)
APPROXIMATE AREA 1260m^2

2-COAT SPRAY SEAL FOOTPATH
100 O/A THICKNESS:
2-COAT BITUMEN SPRAY SEAL WITH CHIP COAT (C170 20/7mm) ON
100mm CBR80 (SOAKED) BASE (DGB20) OVER
APPROXIMATE AREA 661m^2

CROSSOVER PAVEMENT:
200mm THICK CONCRETE FOOTPATH CROSSOVER WITH SL92 MESH AT
50 TOP COVER ON 0.2mm POLYTHENE OVER 150mm THICK CBR45 BASE (DGS20).
APPROXIMATE AREA 120m^2

FOOTPATH:
100mm THICK CONCRETE SLAB (BROOM FINISH) WITH SL72 MESH AT 40
TOP COVER ON 0.2mm POLYTHENE OVER 50mm SAND BEDDING MATERIAL
APPROXIMATE AREA 150m^2

2-COAT SPRAY SEAL DRIVEWAY/ROAD:
250 O/A THICKNESS:
2-COAT BITUMEN SPRAY SEAL WITH CHIP COAT (C170 20/7mm) ON
100mm CBR80 (SOAKED) BASE (DGB20) OVER
150mm CBR45 (SOAKED) BASE (DGS20)
APPROXIMATE AREA 2317m^2

BUND FOOTINGS
AS DETAILED
APPROXIMATE AREA 760m^2

LANDSCAPING:
APPROXIMATE AREA 1353m^2

BUILDING/GANTRY/STRUCTURE SLABS:
AS DETAILED. TYPICALLY 200mm CONCRETE SLAB WITH SL92 MESH AT 50 TOP
COVER ON 0.2mm POLYTHENE OVER 150mm THICK CBR45 BASE 9DGS20).
APPROXIMATE AREA 1560m^2

CONCRETE NOTES:

1. ALL WORKMANSHIP AND MATERIALS SHALL BE IN ACCORDANCE WITH AS3600.
2. CONCRETE QUALITY:

ELEMENT	SLUMP	MAX. SIZE AGG.	CEMENT TYPE	AS 3600 F'C	ADMIX
BUILDING SLABS, FOOTINGS, PAVEMENTS	80	20	GP	N40	NIL
TANK BASES, BUND FLOOR/WALLS	80	20	GP	N40	XYPEX C-5000
MASS CONCRETE BLINDING	100	20	GP	N20	NIL

3. SIZES OF CONCRETE DO NOT INCLUDE THICKNESS OF APPLIED FINISHES.
4. CONSTRUCTION JOINTS WHERE NOT SHOWN SHALL BE LOCATED TO THE APPROVAL OF THE ENGINEER.
5. NO HOLES OR CHASES OTHER THAN THAT SHOWN ON THE STRUCTURAL DRAWINGS SHALL BE MADE IN CONCRETE MEMBERS WITHOUT THE PRIOR APPROVAL OF THE ENGINEER.
6. REINFORCEMENT IS REPRESENTED DIAGRAMMATICALLY. IT IS NOT NECESSARILY SHOWN OF TRUE PROJECTIONS.
7. SPLICES IN REINFORCEMENT SHALL BE MADE ONLY ON THE POSITIONS SHOWN. THE WRITTEN APPROVAL OF THE ENGINEER SHALL BE OBTAINED FOR ANY OTHER SPLICES. WHERE LAP LENGTHS ARE NOT SHOWN, THEY SHALL SATISFY THE REQUIREMENTS OF AS3600 OR AS FOLLOWS:-
   FABRIC - 1 SQUARE +25mm

f'c	N12	N16	N20	N28	N32
25	850	1150	1500	2200	2600
32	750	1000	1300	1950	2300
40	650	900	1150	1750	2100

8. PIPES OR CONDUITS SHALL NOT BE PLACED WITHIN THE CONCRETE COVER TO REINFORCEMENT WITHOUT THE APPROVAL OF THE ENGINEER.
9. ALL STEEL WIRE MESH SHALL BE SUPPLIED IN FLAT SHEETS.
10. THE CONTRACTOR SHALL NOTIFY THE ENGINEER 24 HOURS BEFORE REINFORCEMENT IS COMPLETED. THE CONTRACTOR SHALL ALLOW AFTER COMPLETION OF THE REINFORCEMENT, TWO HOURS FOR THE ENGINEERS INSPECTION.
11. CONCRETE SHALL NOT BE ORDERED UNTIL REINFORCEMENT IS APPROVED BY THE ENGINEER.
12. CONCRETE FINISHING, CURING AND STRIPPING TO BE IN ACCORDANCE WITH THE RELEVANT AUSTRALIAN STANDARDS. CONCRETE TO BE CURED A MINIMUM OF 7 DAYS AFTER POURING BY EITHER APPLYING A SPRAYED MEMBRANE FORMING CURING COMPOUND COMPATIBLE WITH ANY SUBSEQUENT FINISHES TO BE APPLIED TO THE CONCRETE SURFACES, OR COVERING WITH POLYTHENE SHEETING SECURELY HELD IN POSITION.
13. CLEAR CONCRETE COVER TO REINFORCEMENT SHALL BE AS INDICATED.
14. ALL REINFORCEMENT SHALL BE SUPPORTED ON APPROVED CHAIRS AT A MAXIMUM SPACING OF 1000mm CENTRES IN EACH DIRECTION TO PROVIDE THE CORRECT COVER.
15. THE SUPPLY, DELIVERY, SAMPLING AND TESTING OF CONCRETE SHALL BE IN ACCORDANCE WITH AS1379. RESULTS OF CONCRETE CYLINDER SAMPLE TESTING SHALL BE FORWARDED TO THE ENGINEER FOR REVIEW & APPROVAL.

PROJECT MANAGERS | PLANNERS | DESIGNERS | ENGINEERS
TFA Project Group
Copyright TfA Group Pty Ltd
This drawing including design & information is covered by Copyright and all rights are reserved. This document may not be copied, reproduced, retained or disclosed to any unauthorised person, either wholly or in part, without prior consent in writing from TfA Group Pty Ltd.
ACN 612 132 233
Ph: 61 7 3854 2900 Aust Wide: 1300 794 300
Email: enquiry@tfa.com.au Web: www.TFA.com.au

REV	DATE	BY	DESCRIPTION	CHK	APP
A	22.11.21	DH	ISSUED FOR TENDER		

PROJECT CLIENT: MANILDRA GROUP 100% AUSTRALIAN OWNED

PROJECT DETAILS: MANILDRA GROUP
PORT KEMBLA
BULK LIQUIDS FACILITY
FORESHORE ROAD
PORT KEMBLA, NSW

DRAWING TITLE: CONCRETE PAVEMENT LEGEND & CONSTRUCTION NOTES

STATUS: TENDER

DATE CREATED	ORIGINAL SCALE	SHEET
22.11.21	NTS	A3

DO NOT SCALE THIS DRAWING. CONFIRM ALL DIMENSIONS ON SITE.

DRAWING NO	REV
20399-C10	A

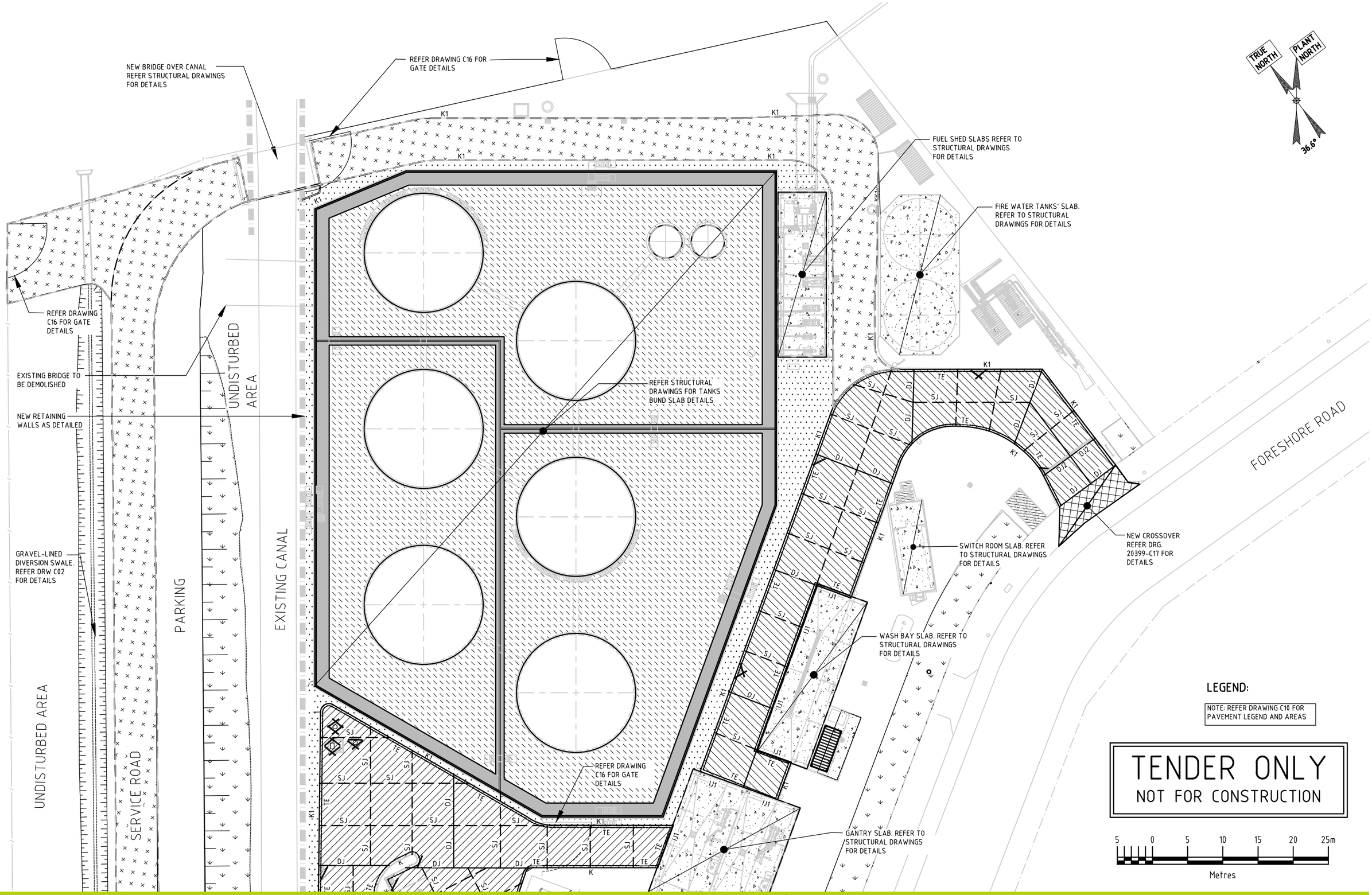

PROJECT MANAGERS | PLANNERS | DESIGNERS | ENGINEERS

TFA Project Group

Copyright TfA Group Pty Ltd
This drawing including design & information is covered by Copyright and all rights are reserved. This document may not be copied, reproduced, retained or disclosed to any unauthorised person, either wholly or in part, without prior consent in writing from TfA Group Pty Ltd.
ACN 612 132 233
Ph: 61 7 3854 2900 Aust Wide: 1300 794 300
Email: enquiry@tfa.com.au Web: www.TFA.com.au

REV	DATE	BY	DESCRIPTION	CHK	APP
A	22.11.21	DH	ISSUED FOR TENDER		

PROJECT CLIENT: MANILDRA GROUP 100% AUSTRALIAN OWNED

PROJECT DETAILS:
MANILDRA GROUP
PORT KEMBLA
BULK LIQUIDS FACILITY
FORESHORE ROAD
PORT KEMBLA, NSW

DRAWING TITLE:
SITE PAVEMENT PLAN
SHEET 1 OF 2

STATUS: TENDER

DATE CREATED	ORIGINAL SCALE	SHEET
22.11.21	1:500	A3

DO NOT SCALE THIS DRAWING. CONFIRM ALL DIMENSIONS ON SITE.

DRAWING NO	REV
20399 - C11	A

UNDISTURBED AREA

PARKING

EXISTING CANAL

SERVICE ROAD

OFFICE

GARAGE

EXISTING SEWER
PUMP STATION

FOR SLAB REFER TO STRUCTURAL DRAWINGS FOR DETAILS

GANTRY SLAB REFER TO STRUCTURAL DRAWINGS FOR DETAILS

NEW CROSSOVER REFER DRG. 20399-C17 FOR DETAILS

FOR OFFICE SLAB DETAILS REFER TO STRUCTURAL DRAWINGS

GARAGE SLAB DETAILS REFER TO STRUCTURAL DRAWINGS

PROPOSED RETAINING WALL REFER TO MANUFACTURER DRAWINGS FOR DETAILS

NEW CROSSOVER REFER DRG. 20399-C14 FOR DETAILS

TRUE NORTH

PLANT NORTH

36.6°

LEGEND:

NOTE: REFER DRAWING C10 FOR PAVEMENT LEGEND AND AREAS

TENDER ONLY
NOT FOR CONSTRUCTION

5 0 5 10 15 20 25m

Metres

REV	DATE	BY	DESCRIPTION	CHK	APP
A	22.11.21	DH	ISSUED FOR TENDER		

PROJECT MANAGERS | PLANNERS | DESIGNERS | ENGINEERS

TfA Project Group

Copyright TfA Group Pty Ltd
This drawing including design & information is covered by Copyright and all rights are reserved. This document may not be copied, reproduced, retained or disclosed to any unauthorised person, either wholly or in part, without prior consent in writing from TfA Group Pty Ltd.
ACN 612 132 233
Ph: 61 7 3854 2900 Aust Wide: 1300 794 300
Email: enquiry@tfa.com.au Web: www.TFA.com.au

PROJECT CLIENT

MANILDRA GROUP
100% AUSTRALIAN OWNED

PROJECT DETAILS

MANILDRA GROUP
PORT KEMBLA
BULK LIQUIDS FACILITY
FORESHORE ROAD
PORT KEMBLA, NSW

DRAWING TITLE

SITE PAVEMENT PLAN
SHEET 2 OF 2

STATUS

TENDER

DATE CREATED	ORIGINAL SCALE	SHEET
22.11.21	1:500	A3

DO NOT SCALE THIS DRAWING. CONFIRM ALL DIMENSIONS ON SITE.

DRAWING NO	REV
20399-C12	A

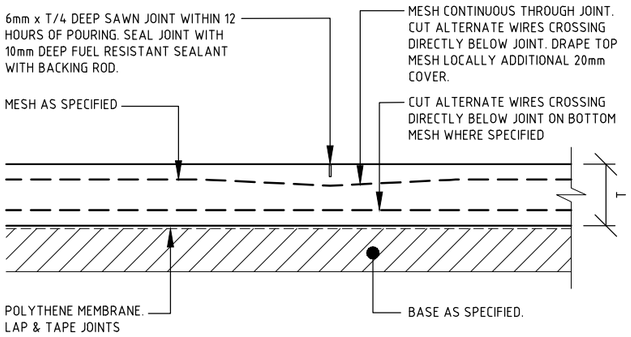

TYPICAL SAW JOINT (SJ)

SCALE 1 : 20

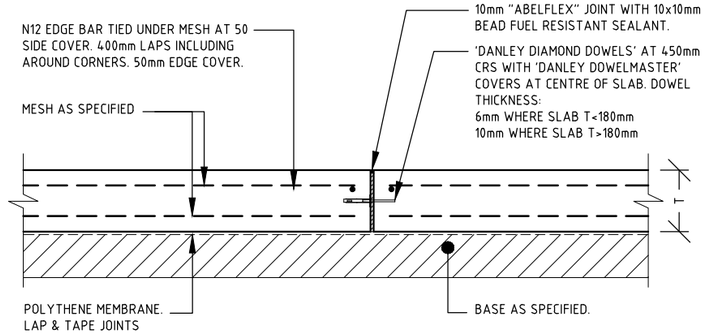

DOWEL JOINT (DJ)

SCALE 1 : 20

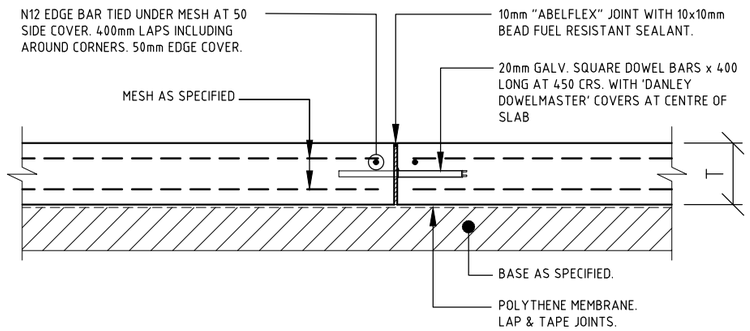

ALTERNATIVE DOWEL JOINT (DJ)

SCALE 1 : 20

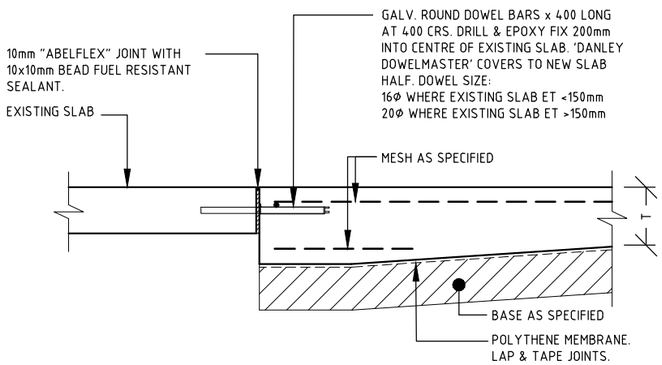

DOWEL JOINT (DJ3)

SCALE 1 : 20

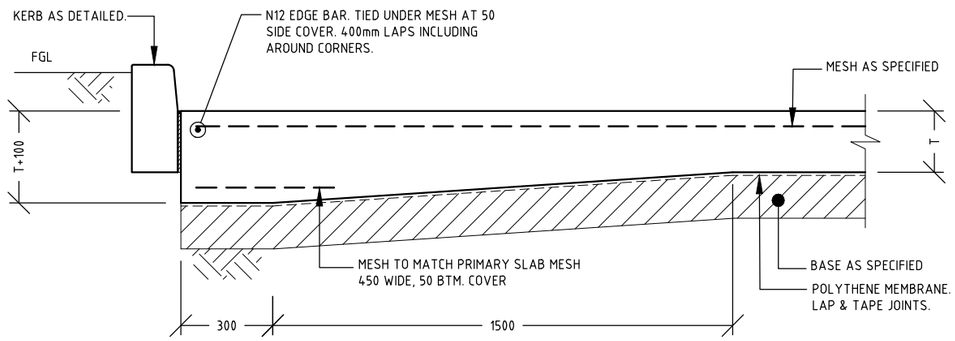

TYPICAL THICKENED EDGE (TE)

SCALE 1 : 20

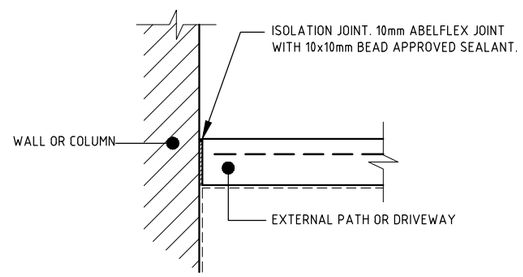

ISOLATION JOINT (IJ)

SCALE 1 : 20

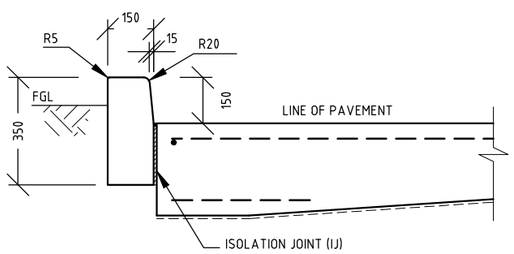

BARRIER KERB DETAIL (K)

SCALE 1 : 20

TENDER ONLY
NOT FOR CONSTRUCTION

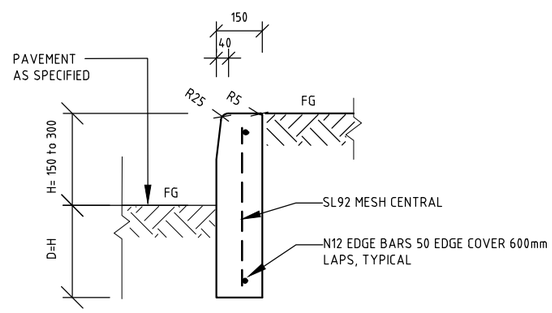

BARRIER KERB DETAIL (K1)

PROVIDE JOINTS IN KERB TO MATCH JOINTS IN PAVEMENT

SCALE 1 : 20

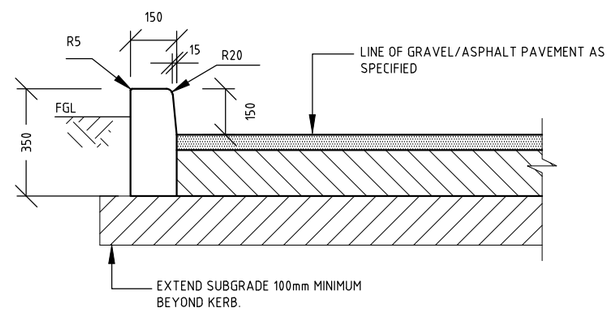

BARRIER KERB DETAIL (K)

SCALE 1 : 20

200 0 500 1000mm

Millimetres

REV	DATE	BY	DESCRIPTION	CHK	APP
A	19.11.2021	DH	ISSUED FOR TENDER		

PROJECT MANAGERS | PLANNERS | DESIGNERS | ENGINEERS

TFA Project Group

Copyright TFA Group Pty Ltd
This drawing including design & information is covered by Copyright and all rights are reserved. This document may not be copied, reproduced, retained or disclosed to any unauthorised person, either wholly or in part, without prior consent in writing from TFA Group Pty Ltd.
ACN 612 132 233
Ph: 61 7 3854 2900 Aust Wide: 1300 794 300
Email: enquiry@tfa.com.au Web: www.TFA.com.au

PROJECT CLIENT: MANILDRA GROUP 100% AUSTRALIAN OWNED

PROJECT DETAILS: MANILDRA GROUP, PORT KEMBLA, BULK LIQUIDS FACILITY, FORESHORE ROAD, PORT KEMBLA, NSW

DRAWING TITLE: SITE PAVEMENT DETAILS SHEET 1 OF 2

STATUS: TENDER

DATE CREATED	ORIGINAL SCALE	SHEET
19.11.2021	1:20	A3

DO NOT SCALE THIS DRAWING. CONFIRM ALL DIMENSIONS ON SITE.

DRAWING NO	REV
20399-C13	A

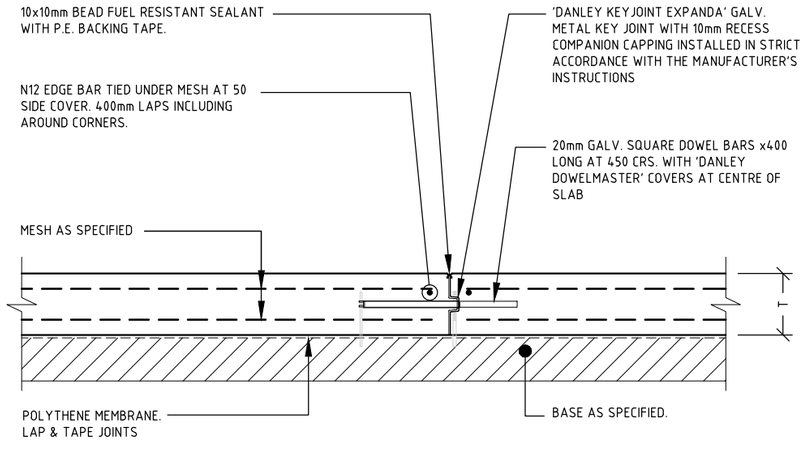

KEY JOINT (KJ)

SCALE 1 : 20

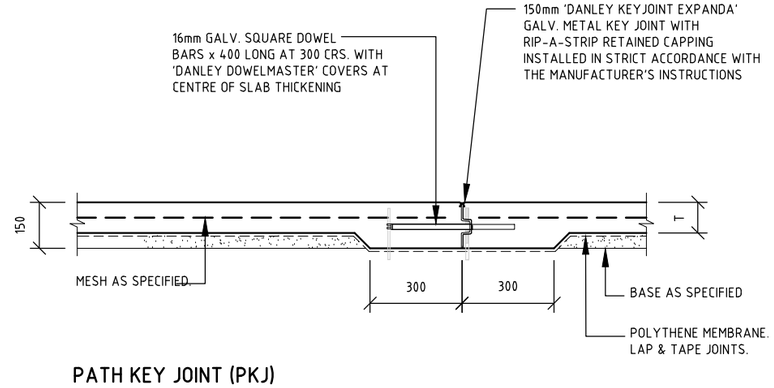

PATH KEY JOINT (PKJ)

SCALE 1 : 20

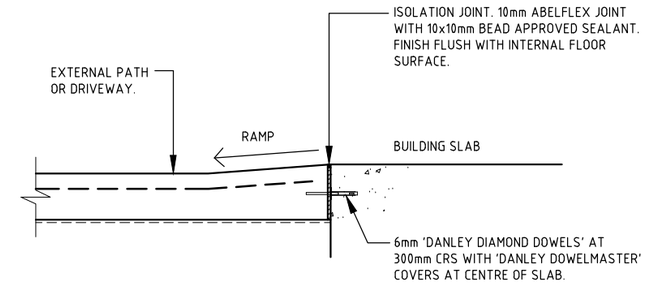

ISOLATION JOINT (IJ1)

(AT DOORWAY ONLY)

SCALE 1 : 20

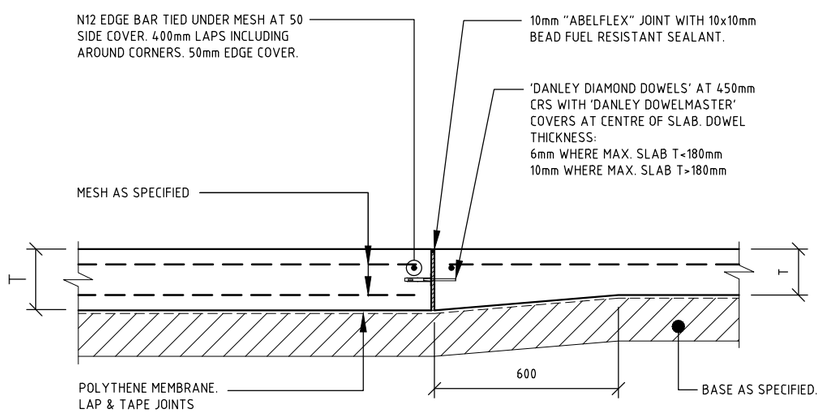

DOWEL JOINT (DJ1)

SCALE 1 : 20

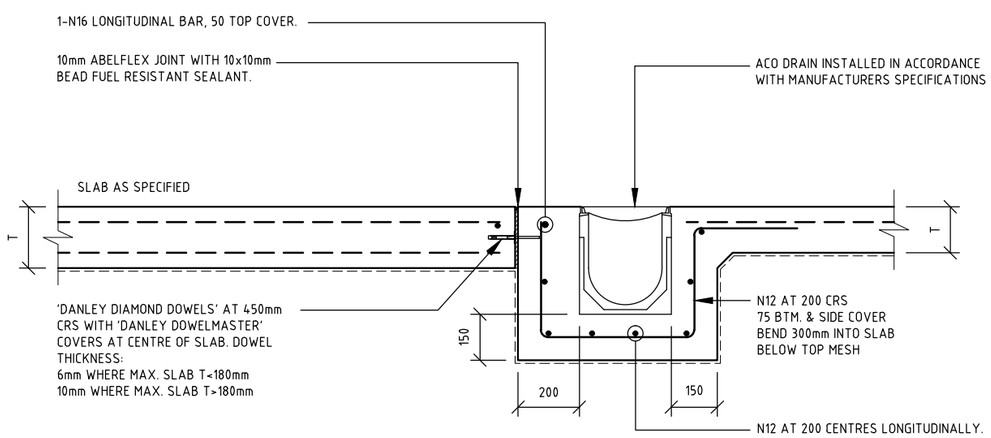

DOWEL JOINT (DJ2)

ACO TRENCH DRAIN SECTION WITH DOWEL JOINT

SCALE 1 : 20

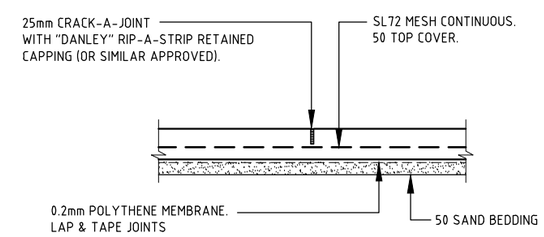

PATH CRACK CONTROL JOINT (CCJ)

SCALE 1 : 20

TENDER ONLY
NOT FOR CONSTRUCTION

200 0 500 1000mm
Millimetres

PROJECT MANAGERS | PLANNERS | DESIGNERS | ENGINEERS

TFA Project Group

Copyright TFA Group Pty Ltd
This drawing including design & information is covered by Copyright and all rights are reserved. This document may not be copied, reproduced, retained or disclosed to any unauthorised person, either wholly or in part, without prior consent in writing from TFA Group Pty Ltd.
ACN 612 132 233
Ph: 61 7 3854 2900 Aust Wide: 1300 794 300
Email: enquiry@tfa.com.au Web: www.TFA.com.au

REV	DATE	BY	DESCRIPTION	CHK	APP
A	19.11.2021	DH	ISSUED FOR TENDER		

PROJECT CLIENT: MANILDRA GROUP 100% AUSTRALIAN OWNED

PROJECT DETAILS: MANILDRA GROUP
PORT KEMBLA
BULK LIQUIDS FACILITY
FORESHORE ROAD
PORT KEMBLA, NSW

DRAWING TITLE: SITE PAVEMENT DETAILS
SHEET 2 OF 2

STATUS: TENDER

DATE CREATED	ORIGINAL SCALE	SHEET
19.11.2021	1:20	A3

DO NOT SCALE THIS DRAWING. CONFIRM ALL DIMENSIONS ON SITE.

DRAWING NO	REV
20399-C14	A

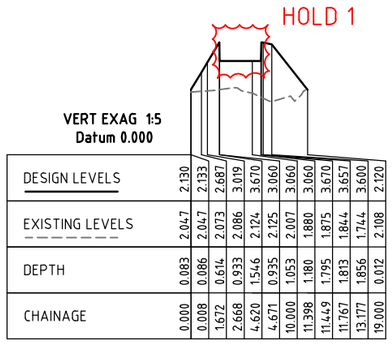
HOLD 1
VERT EXAG 1:5
Datum 0.000

| | | |

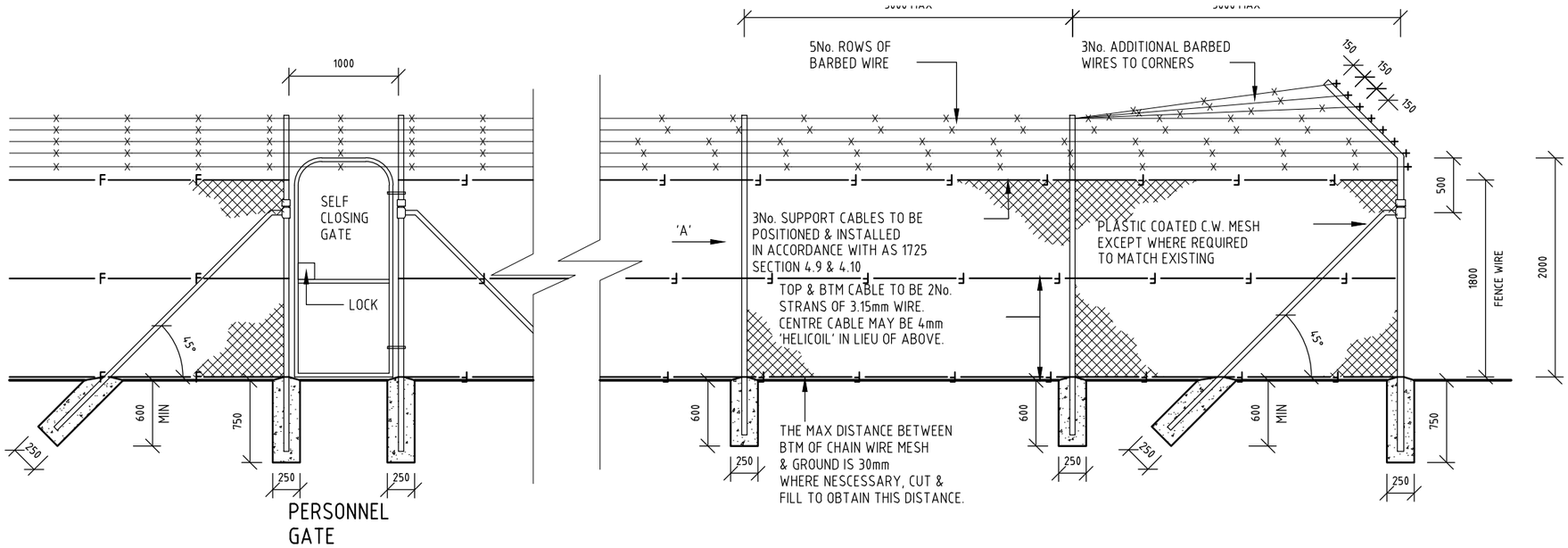

CORNER AND INTERMEDIATE PANELS

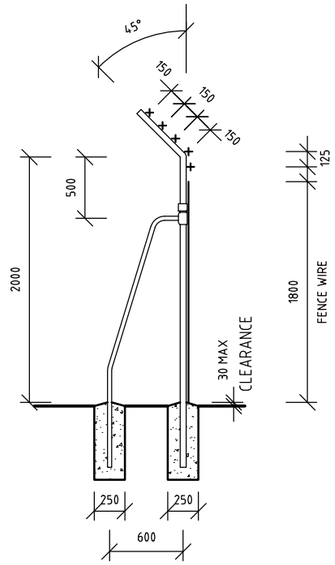

VERTICAL BRACE
VIEW 'A'

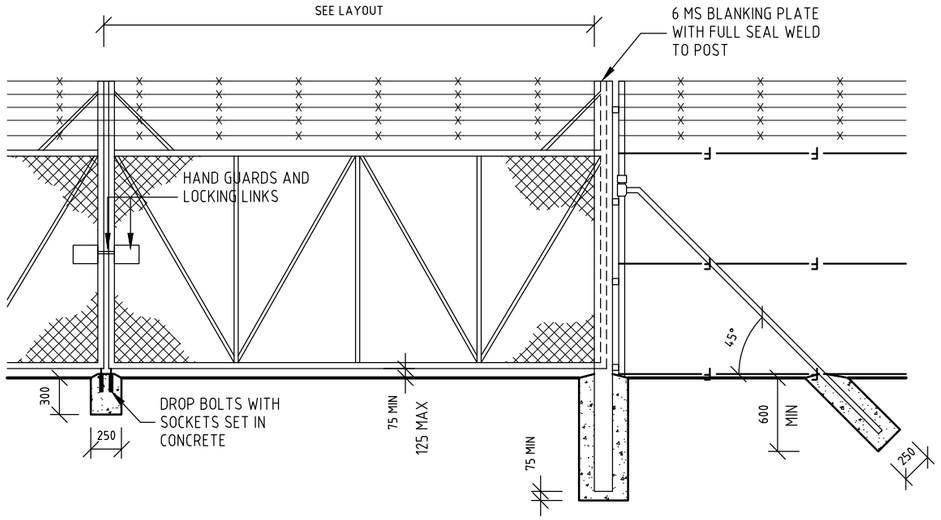

LARGE GATES

INTERNAL & EMERGENCY ACCESS ONLY

NOTE:

PALISADE GATES WITH SPIKES (MAIN TRUCK ENTRY/EXIT)

GATES

GALVANISED MEDIUM WEIGHT PIPE

GATE OPENING	NOMINAL LEAF WIDTH	TYPE	OUTER FRAME TUBE	INNER FRAME TUBE	DIAGONAL BRACING		TOP DIAGONAL BRACING FOR WIRE	GATE POST	GATE POST FOOTING	
			N.B.	N.B.	O.D.	TYPE	N.B.	N.B.	N.B.	DEPTH
1000	1000		25	25	-		15	50	250	750
6000	3000		32	25	-		15	80	400	1000
6000 - 8000	3000 - 4000 A	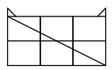	32	25	25 x 5	GALV. CARB. STEEL FLAT	15	100	400	1000
8000 - 10000	4000 - 5000	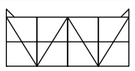	40	25	26.9	2.6	15	150	400	1000
10000 - 12000	5000 - 6000	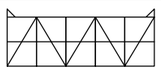	40	25	26.9	2.6	15	152 x 4.9 SHS	400	1000

FENCES

GALVANISED STEEL PIPE

CORNER POST	50 N.B. MEDIUM PIPE
INTERMEDIATE POST	40 N.B. LIGHT PIPE
DIAGONAL STAYS AND BRACES	32 N.B. LIGHT PIPE
VERTICAL BRACES	25 N.B. LIGHT PIPE

NOTES:

1. ALL FENCE COMPONENTS TO BE PAINTED BLACK
2. CHAIN WIRE TO BE BLACK PLASTIC COATED

TENDER ONLY
NOT FOR CONSTRUCTION

REV	DATE	BY	DESCRIPTION	CHK	APP
A	17.11.2021	LS	ISSUED FOR TENDER		

PROJECT MANAGERS | PLANNERS | DESIGNERS | ENGINEERS

TFA Project Group

Copyright TfA Group Pty Ltd
This drawing including design & information is covered by Copyright and all rights are reserved. This document may not be copied, reproduced, retained or disclosed to any unauthorised person, either wholly or in part, without prior consent in writing from TfA Group Pty Ltd.
ACN 612 132 233
Ph: 61 7 3854 2900 Aust Wide: 1300 794 300
Email: enquiry@tfa.com.au Web: www.TFA.com.au

PROJECT CLIENT: MANILDRA GROUP 100% AUSTRALIAN OWNED

PROJECT DETAILS: MANILDRA GROUP
PORT KEMBLA
BULK LIQUIDS FACILITY
FORESHORE ROAD
PORT KEMBLA, NSW

DRAWING TITLE: SECURITY FENCING DETAILS

STATUS: TENDER

DATE CREATED	ORIGINAL SCALE	SHEET
17.11.2021	AS SHOWN	A3

DO NOT SCALE THIS DRAWING. CONFIRM ALL DIMENSIONS ON SITE.

DRAWING NO	REV
20399-C16	A

LEGEND:

	PROPERTY BOUNDARY
EJ1	EXPANSION JOINT
SJ	SAW JOINT
TE	THICKENED EDGE
	EXISTING CONTOURS (0.25m INTERVALS)
IJ	ISOLATION JOINT
PP	EXISTING POWER POLE
× 3.33	PROPOSED SPOT HEIGHT (mAHD)
✳ 3.33	EXISTING SPOT HEIGHT (mAHD)

FOR PAVEMENT DRAWING DETAILS REFER WOLLONGONG CITY COUNCIL ENGINEERING STANDARD DRAWINGS

CONCRETE CROSSOVERS SHALL BE 200mm THICK CONCRETE N32 CONCRETE WITH SL92 MESH AT 40 TOP COVER OVER 0.2mm POLYMER OVER CBR 45 SUBBASE (DGB20)

TENDER ONLY
NOT FOR CONSTRUCTION

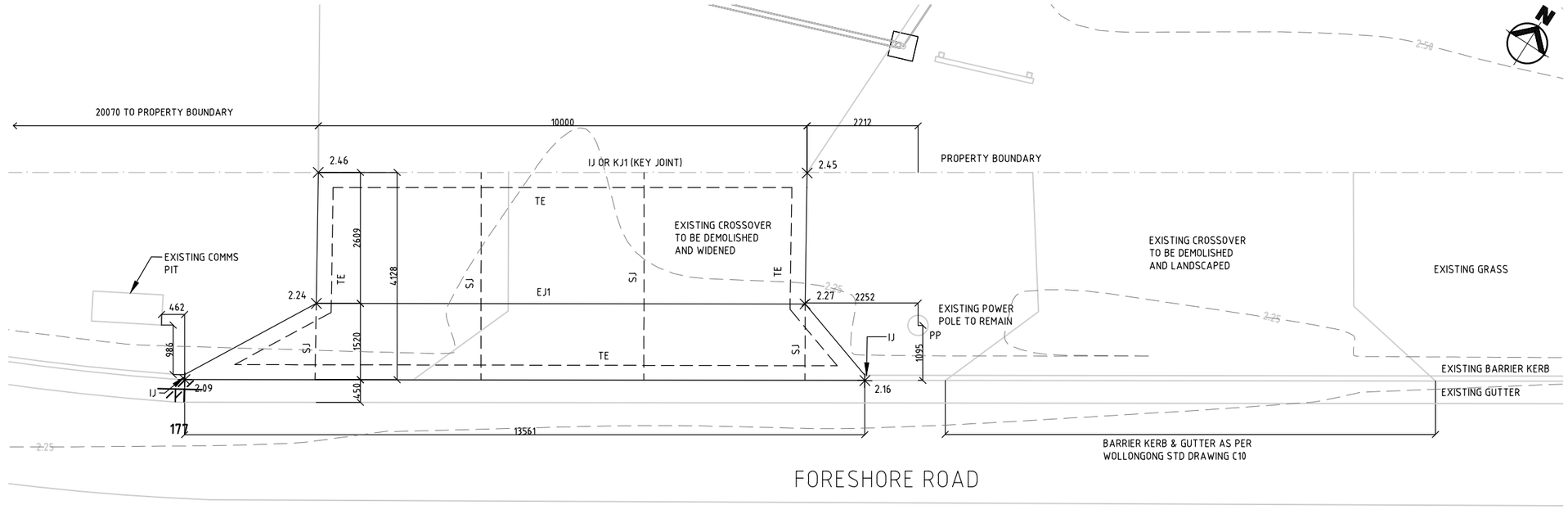

WESTERN CROSSOVER DETAIL
SCALE 1:100

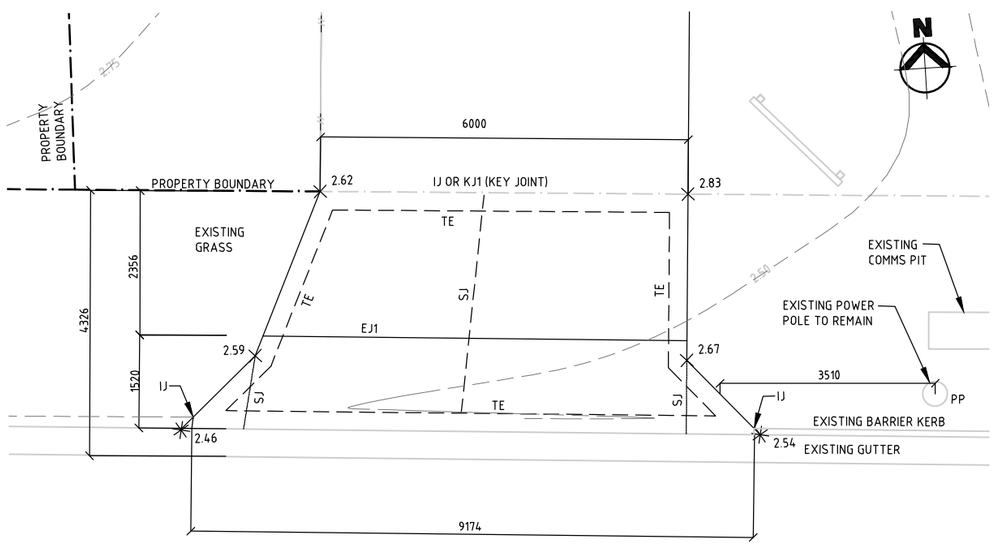

SERVICE ROAD CROSSOVER DETAIL
SCALE 1:100

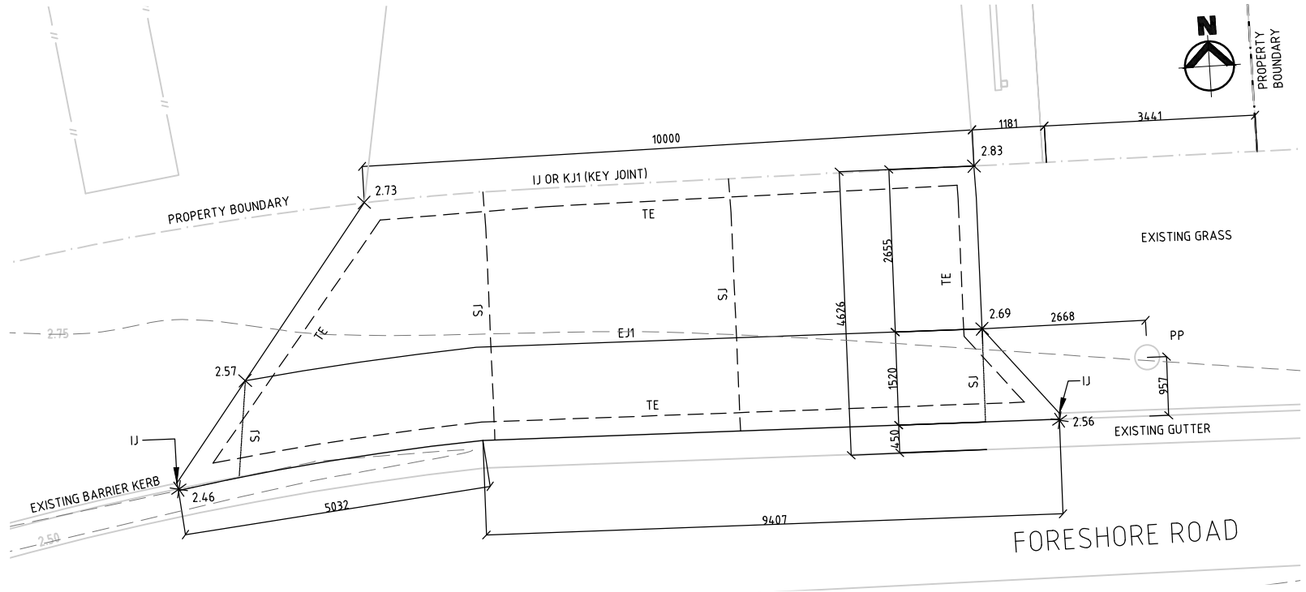

EASTERN CROSSOVER DETAIL
SCALE 1:100

1 0 1 2 3 4 5m
Metres

PROJECT MANAGERS | PLANNERS | DESIGNERS | ENGINEERS	REV	DATE	BY	DESCRIPTION	CHK	APP
	A	19.11.2021	LS	ISSUED FOR TENDER		

TfA Project Group

Copyright TfA Group Pty Ltd
This drawing including design & information is covered by Copyright and all rights are reserved. This document may not be copied, reproduced, retained or disclosed to any unauthorised person, either wholly or in part, without prior consent in writing from TfA Group Pty Ltd.
ACN 612 132 233
Ph: 61 7 3854 2900 Aust Wide: 1300 794 300
Email: enquiry@tfa.com.au Web: www.TFA.com.au

PROJECT CLIENT: MANILDRA GROUP — 100% AUSTRALIAN OWNED

PROJECT DETAILS:
MANILDRA GROUP
PORT KEMBLA
BULK LIQUIDS FACILITY
FORESHORE ROAD
PORT KEMBLA, NSW

DRAWING TITLE: PROPOSED DRIVEWAY CROSSOVER PLAN

STATUS: TENDER

DATE CREATED	ORIGINAL SCALE	SHEET
19.11.2021	1:100	A3

DO NOT SCALE THIS DRAWING. CONFIRM ALL DIMENSIONS ON SITE.

DRAWING NO	REV
20399-C17	A

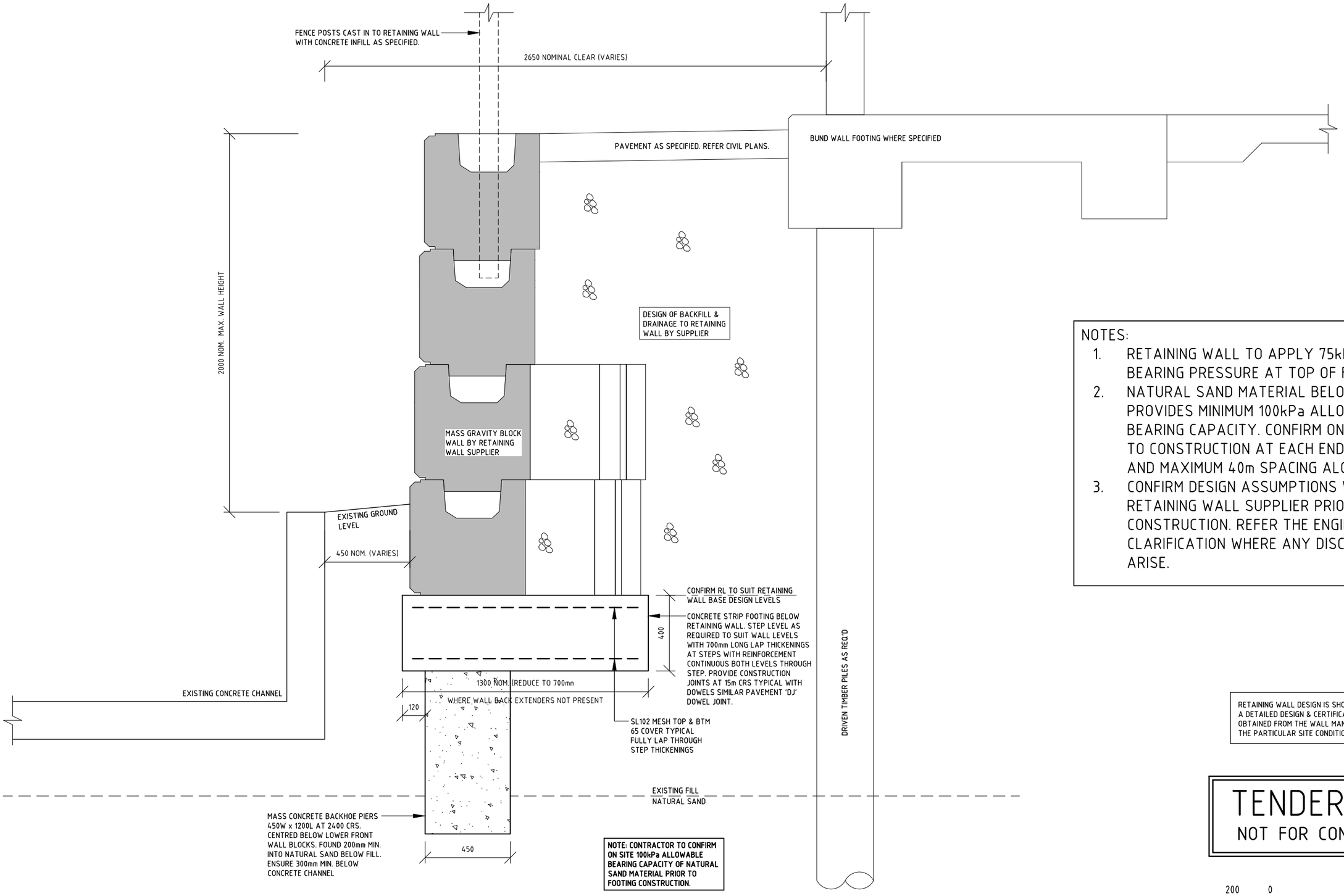

NOTES:

1. RETAINING WALL TO APPLY 75kPa MAXIMUM BEARING PRESSURE AT TOP OF FOOTING.
2. NATURAL SAND MATERIAL BELOW FILL PROVIDES MINIMUM 100kPa ALLOWABLE BEARING CAPACITY. CONFIRM ON SITE PRIOR TO CONSTRUCTION AT EACH END OF WALLS AND MAXIMUM 40m SPACING ALONG WALLS.
3. CONFIRM DESIGN ASSUMPTIONS WITH RETAINING WALL SUPPLIER PRIOR TO CONSTRUCTION. REFER THE ENGINEER FOR CLARIFICATION WHERE ANY DISCREPANCIES ARISE.

RETAINING WALL DESIGN IS SHOWN NOMINALLY ONLY. A DETAILED DESIGN & CERTIFICATION SHALL BE OBTAINED FROM THE WALL MANUFACTURER TO SUIT THE PARTICULAR SITE CONDITIONS

TENDER ONLY
NOT FOR CONSTRUCTION

200 0 500 1000mm
Millimetres

NOMINAL GRAVITY RETAINING WALL SECTION

EASTERN AND WESTERN WALLS SIMILAR

SCALE 1:20

REV	DATE	BY	DESCRIPTION	CHK	APP
A	15.11.21	JT	ISSUED FOR TENDER	JA	JT

PROJECT MANAGERS | PLANNERS | DESIGNERS | ENGINEERS

TfA Project Group

Copyright TfA Group Pty Ltd
This drawing including design & information is covered by Copyright and all rights are reserved. This document may not be copied, reproduced, retained or disclosed to any unauthorised person, either wholly or in part, without prior consent in writing from TfA Group Pty Ltd.

ACN 612 132 233
Ph: 61 7 3854 2900 Aust Wide: 1300 794 300
Email: enquiry@tfa.com.au Web: www.TFA.com.au

PROJECT CLIENT: MANILDRA GROUP 100% AUSTRALIAN OWNED

PROJECT DETAILS: MANILDRA GROUP
PORT KEMBLA
BULK LIQUIDS FACILITY
FORESHORE ROAD
PORT KEMBLA, NSW

DRAWING TITLE: RETAINING WALL DETAILS SHEET 2

STATUS: TENDER

DATE CREATED	ORIGINAL SCALE	SHEET
04.11.2021	1:20	A3

DO NOT SCALE THIS DRAWING. CONFIRM ALL DIMENSIONS ON SITE.

DRAWING NO	REV
20399-C20	A

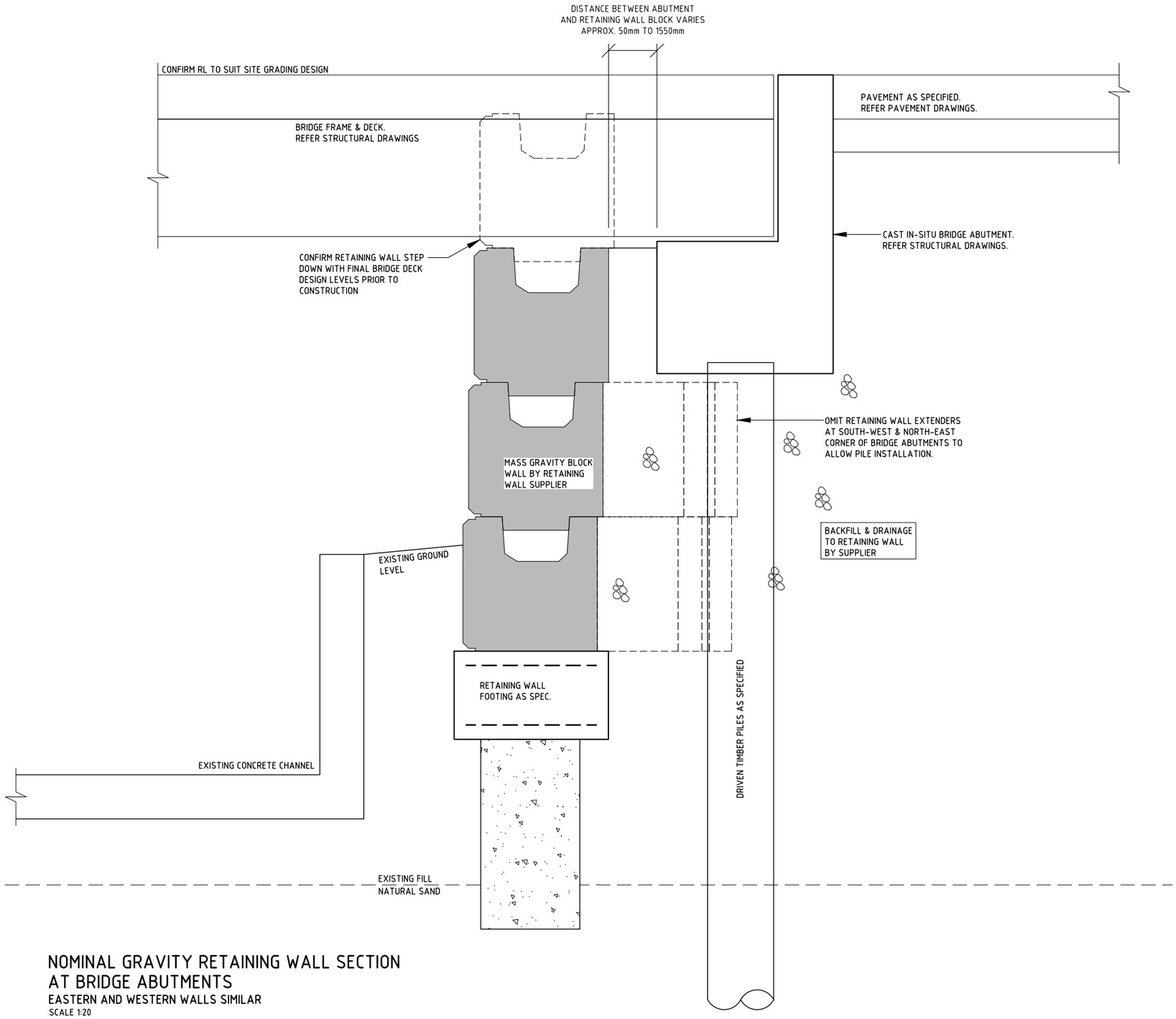

RETAINING WALL DESIGN IS SHOWN NOMINALLY ONLY.
A DETAILED DESIGN & CERTIFICATION SHALL BE
OBTAINED FROM THE WALL MANUFACTURER TO SUIT
THE PARTICULAR SITE CONDITIONS

TENDER ONLY
NOT FOR CONSTRUCTION

NOMINAL GRAVITY RETAINING WALL SECTION AT BRIDGE ABUTMENTS

EASTERN AND WESTERN WALLS SIMILAR

SCALE 1:20

200 0 500 1000mm

Millimetres

REV	DATE	BY	DESCRIPTION	CHK	APP
A	15.11.21	JT	ISSUED FOR TENDER	JA	JT

PROJECT MANAGERS | PLANNERS | DESIGNERS | ENGINEERS

TFA Project Group

Copyright TfA Group Pty Ltd
This drawing including design & information is covered by Copyright and all rights are reserved. This document may not be copied, reproduced, retained or disclosed to any unauthorised person, either wholly or in part, without prior consent in writing from TfA Group Pty Ltd.
ACN 612 132 233
Ph: 61 7 3854 2900 Aust Wide: 1300 794 300
Email: enquiry@tfa.com.au Web: www.TFA.com.au

PROJECT CLIENT: MANILDRA GROUP 100% AUSTRALIAN OWNED

PROJECT DETAILS:
MANILDRA GROUP
PORT KEMBLA
BULK LIQUIDS FACILITY
FORESHORE ROAD
PORT KEMBLA, NSW

DRAWING TITLE:
RETAINING WALL DETAILS
SHEET 2

STATUS: TENDER

DATE CREATED	ORIGINAL SCALE	SHEET
04.11.2021	1:20	A3

DO NOT SCALE THIS DRAWING. CONFIRM ALL DIMENSIONS ON SITE.

DRAWING NO	REV
20399-C21	A

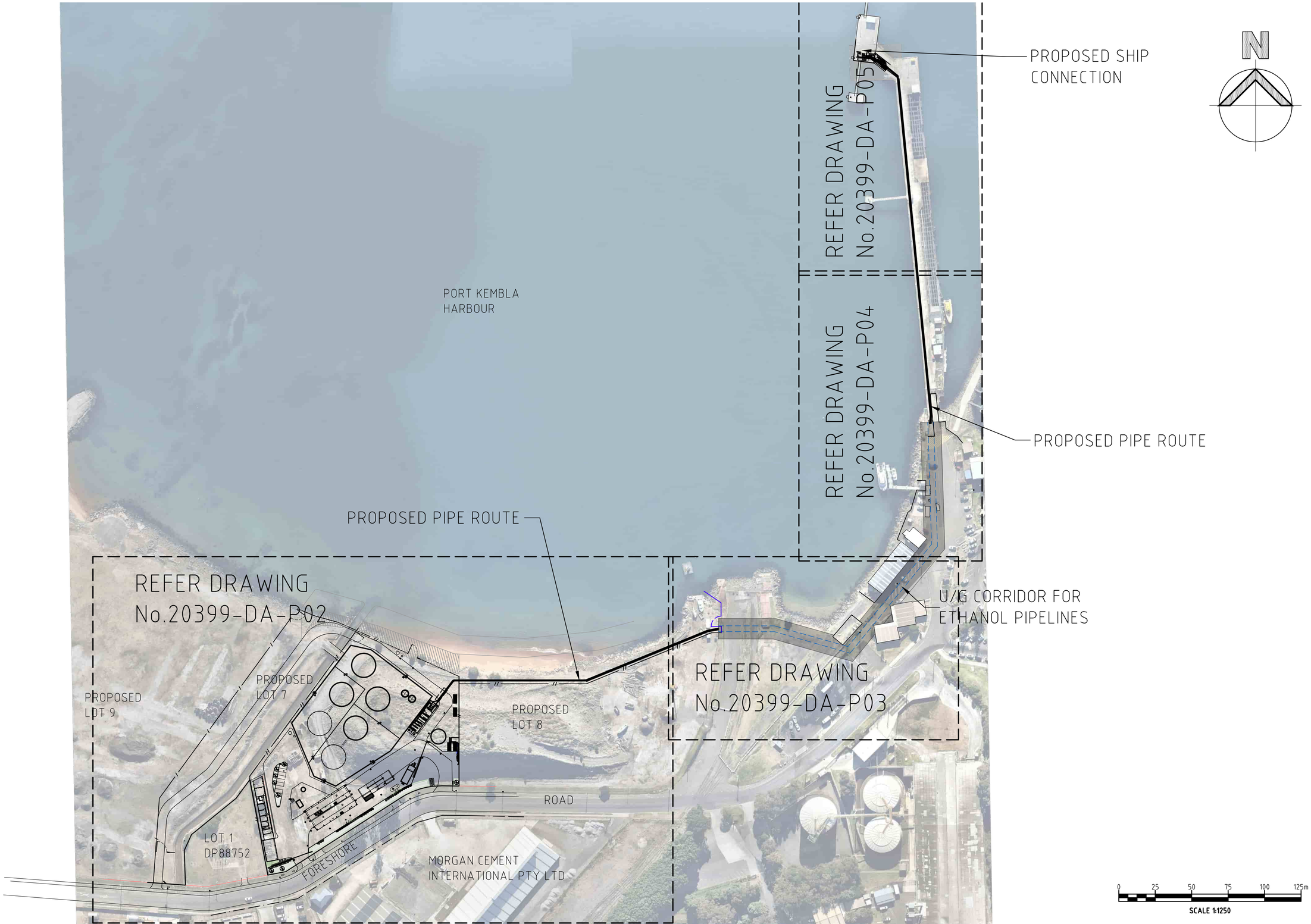

PROJECT MANAGERS | PLANNERS | DESIGNERS | ENGINEERS

TfA Project Group

Copyright TfA Group Pty Ltd
This drawing including design & information is covered by Copyright and all rights are reserved. This document may not be copied, reproduced, retained or disclosed to any unauthorised person, either wholly or in part, without prior consent in writing from TfA Group Pty Ltd.
ACN 612 132 233
Ph: 61 7 3854 2900 Aust Wide: 1300 794 300
Email: enquiry@tfa.com.au Web: www.TfA.com.au

REV	DATE	BY	DESCRIPTION	CHK	APP
H	10.08.22	HE	REVISED ROUTE DETAILS	BV	BP
B	12.07.21	LCC	PRELIMINARY ISSUE		
C	26.07.21	LCC	PRELIMINARY ISSUE		
D	29.07.21	LCC	APPROVAL		
E	20.08.21	LCC	D.A. ISSUE	BV	BP
F	14.10.21	CC	RE-ISSUE FOR D.A.	BV	BP
G	03.11.21	LCN	REVISED FOR U/G ROUTE FOR D.A.	BV	BP

PROJECT CLIENT

MANILDRA GROUP
100% AUSTRALIAN OWNED

PROJECT DETAILS

MANILDRA GROUP
PORT KEMBLA
BULK LIQUIDS FACILITY
FORESHORE ROAD
PORT KEMBLA, NSW

DRAWING TITLE

PROPOSED PIPELINE ROUTE AND KEY PLAN

STATUS

D.A. ISSUE

DATE CREATED	ORIGINAL SCALE	SHEET
24.06.21	1:1250	A1

DO NOT SCALE THIS DRAWING. CONFIRM ALL DIMENSIONS ON SITE.

DRAWING NO	REV
20399-DA-P01	H

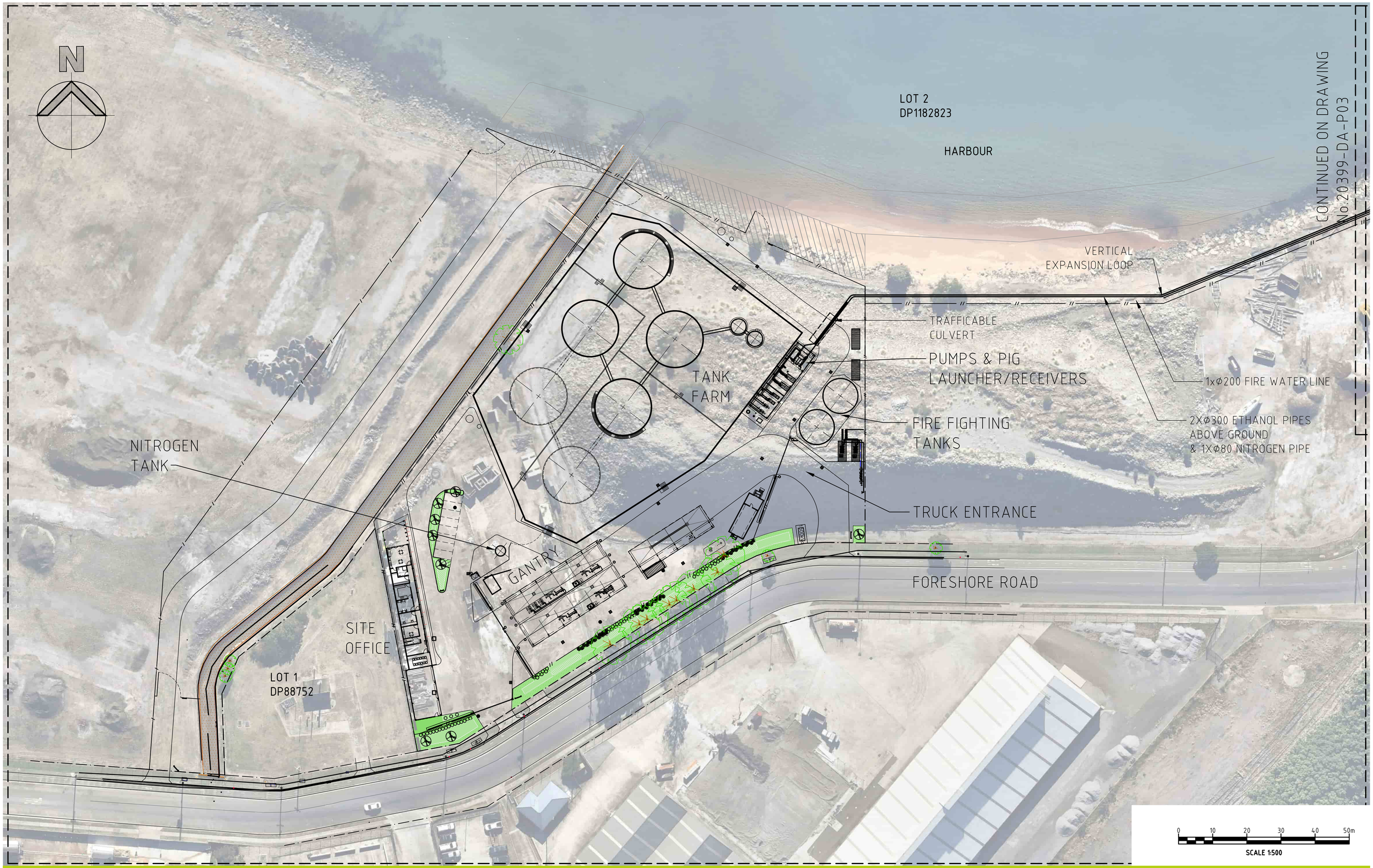

PROJECT MANAGERS | PLANNERS | DESIGNERS | ENGINEERS

TfA Project Group

Copyright TfA Group Pty Ltd
This drawing including design & information is covered by Copyright and all rights are reserved. This document may not be copied, reproduced, retained or disclosed to any unauthorised person, either wholly or in part, without prior consent in writing from TfA Group Pty Ltd.
ACN 612 132 233
Ph: 61 7 3854 2900 Aust Wide: 1300 794 300
Email: enquiry@tfa.com.au Web: www.TfA.com.au

REV	DATE	BY	DESCRIPTION	CHK	APP
A	24.06.21	LCC	PRELIMINARY ISSUE		
B	26.07.21	LCC	PRELIMINARY ISSUE		
C	29.07.21	LCC	APPROVAL		
D	20.08.21	LCC	D.A. ISSUE	BV	BP
E	14.10.21	CC	RE-ISSUE FOR D.A.	BV	BP
F	10.03.22	HE	REVISED ROUTE DETAILS	BV	BP

PROJECT CLIENT

MANILDRA GROUP
100% AUSTRALIAN OWNED

PROJECT DETAILS

MANILDRA GROUP
PORT KEMBLA
BULK LIQUIDS FACILITY
FORESHORE ROAD
PORT KEMBLA, NSW

DRAWING TITLE

PROPOSED SITE OPERATIONS

STATUS

D.A. ISSUE

DATE CREATED	ORIGINAL SCALE	SHEET
24.06.21	1:500	A1

DO NOT SCALE THIS DRAWING. CONFIRM ALL DIMENSIONS ON SITE.

DRAWING NO	REV
20399-DA-P02	F

PROJECT MANAGERS | PLANNERS | DESIGNERS | ENGINEERS

TfA Project Group

Copyright TfA Group Pty Ltd
This drawing including design & information is covered by Copyright and all rights are reserved. This document may not be copied, reproduced, retained or disclosed to any unauthorised person, either wholly or in part, without prior consent in writing from TfA Group Pty Ltd.
ACN 612 132 233
Ph: 61 7 3854 2900 Aust Wide: 1300 794 300
Email: enquiry@tfa.com.au Web: www.TfA.com.au

REV	DATE	BY	DESCRIPTION	CHK	APP
H	10.03.22	HE	REVISED ROUTE DETAILS	BV	BP
B	13.07.21	LCC	PRELIMINARY ISSUE		
C	26.07.21	LCC	PRELIMINARY ISSUE		
D	29.07.21	LCC	APPROVAL		
E	20.08.21	LCC	D.A. ISSUE	BV	BP
F	14.10.21	CC	RE-ISSUE FOR D.A.	BV	BP
G	03.11.21	LCN	REVISED TO U/G ROUTE FOR D.A.	BV	BP

PROJECT CLIENT

MANILDRA GROUP
100% AUSTRALIAN OWNED

PROJECT DETAILS

MANILDRA GROUP
PORT KEMBLA
BULK LIQUIDS FACILITY
FORESHORE ROAD
PORT KEMBLA, NSW

DRAWING TITLE

PROPOSED SITE ROUTE
SHEET 1

STATUS

D.A. ISSUE

DATE CREATED	ORIGINAL SCALE	SHEET
24.06.21	1:250	A1

DO NOT SCALE THIS DRAWING. CONFIRM ALL DIMENSIONS ON SITE.

DRAWING NO	REV
20399-DA-P03	H

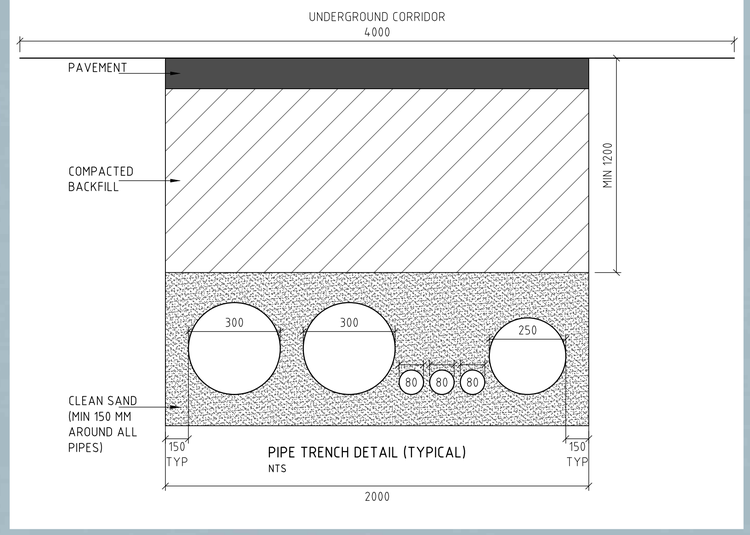

PIPE TRENCH DETAIL (TYPICAL)
NTS

CONTINUED ON DRAWING No.20399-DA-P03

CONTINUED ON DRAWING No.20399-DA-P05

EXISTING CHAIN WIRE FENCE

PP

2xΦ300 PIPES ABOVE WHARF

ISOLATION SHORE VALVES & INSULATING FLANGES

VERTICAL EXPANSION LOOPS ALONG BERTH TYPICALLY EVERY 100m

WHARF

U/G CORRIDOR FOR ETHANOL PIPELINES 4m WIDE (2xΦ300 PIPES, 1xΦ80 NITROGEN PIPE, 1xΦ250 FIRE WATER & 2xΦ80 CONDUITS)

EXISTING CHAIN WIRE FENCE

CONSTRUCTION ACCESS ZONE (TYP. 6M FROM TRENCH)

Φ200 FIRE WATER LINE

HARBOUR BREAKWATER WALL

PP

0 5 10 15 20 25m

SCALE 1:250

PROJECT MANAGERS | PLANNERS | DESIGNERS | ENGINEERS

TfA Project Group

Copyright TfA Group Pty Ltd
This drawing including design & information is covered by Copyright and all rights are reserved. This document may not be copied, reproduced, retained or disclosed to any unauthorised person, either wholly or in part, without prior consent in writing from TfA Group Pty Ltd.
ACN 612 132 233
Ph: 61 7 3854 2900 Aust Wide: 1300 794 300
Email: enquiry@tfa.com.au Web: www.TfA.com.au

REV	DATE	BY	DESCRIPTION	CHK	APP
H	10.03.22	HE	REVISED PIPE ROUTE DETAILS	BV	BP
B	13.07.21	LCC	PRELIMINARY ISSUE		
C	26.07.21	LCC	PRELIMINARY ISSUE		
D	29.07.21	LCC	APPROVAL		
E	20.08.21	LCC	D.A. ISSUE	BV	BP
F	14.10.21	CC	RE-ISSUE FOR D.A.	BV	BP
G	02.11.21	LCN	REVISED TO U/G ROUTE FOR D.A.	BV	BP

PROJECT CLIENT

MANILDRA GROUP
100% AUSTRALIAN OWNED

PROJECT DETAILS

MANILDRA GROUP
PORT KEMBLA
BULK LIQUIDS FACILITY
FORESHORE ROAD
PORT KEMBLA, NSW

DRAWING TITLE

PROPOSED SITE ROUTE
SHEET 2

STATUS

D.A. ISSUE

DATE CREATED	ORIGINAL SCALE	SHEET
24.06.21	1:250	A1

DO NOT SCALE THIS DRAWING. CONFIRM ALL DIMENSIONS ON SITE.

DRAWING NO	REV
20399-DA-P04	H

PROJECT MANAGERS | PLANNERS | DESIGNERS | ENGINEERS

TfA Project Group

Copyright TfA Group Pty Ltd
This drawing including design & information is covered by Copyright and all rights are reserved. This document may not be copied, reproduced, retained or disclosed to any unauthorised person, either wholly or in part, without prior consent in writing from TfA Group Pty Ltd.
ACN 612 132 233
Ph: 61 7 3854 2900 Aust Wide: 1300 794 300
Email: enquiry@tfa.com.au Web: www.TfA.com.au

REV	DATE	BY	DESCRIPTION	CHK	APP
A	24.06.21	LCC	PRELIMINARY ISSUE		
B	13.07.21	LCC	PRELIMINARY ISSUE		
C	26.07.21	LCC	PRELIMINARY ISSUE		
D	29.07.21	LCC	APPROVAL		
E	20.08.21	LCC	D.A. ISSUE	BV	BP
F	14.10.21	CC	RE-ISSUE FOR D.A.	BV	BP
G	10.03.22	HE	REVISED ROUTE DETAILS	BV	BP

PROJECT CLIENT

MANILDRA GROUP
100% AUSTRALIAN OWNED

PROJECT DETAILS

MANILDRA GROUP
PORT KEMBLA
BULK LIQUIDS FACILITY
FORESHORE ROAD
PORT KEMBLA, NSW

DRAWING TITLE

PROPOSED SITE ROUTE
SHEET 3

STATUS

D.A. ISSUE

DATE CREATED	ORIGINAL SCALE	SHEET
24.06.21	1:250	A1

DO NOT SCALE THIS DRAWING. CONFIRM ALL DIMENSIONS ON SITE.

DRAWING NO	REV
20399-DA-P05	G

Appendix E **Unexpected Finds Procedure**

Purpose

This procedure describes the actions to be taken in the event that previously unidentified material suspected of being contaminated is found during Site earthworks.

Induction/Training

This Procedure is applicable to all activities conducted by all Site workers that have the potential to encounter contaminated material during earthworks.

The Principal Contractor shall ensure that all personnel are to be inducted on the identification of potential contaminated material and the requirements with this procedure during the inductions and safety toolbox talks.

What is and Unexpected Find?

In the context of this procedure an unexpected find is where evidence of contamination is identified during the course of works that has not been previously identified at the Site or is not already being managed or controlled by another procedure. Examples of unexpected finds may include, but not limited to those described in Table E1 below.

Table E1 Typical Unexpected Finds

Unexpected contamination source type	Typical observations
Asbestos containing material (ACM) or Friable forms of asbestos	Occurrences of bonded fibre cement sheeting in relatively good condition are expected and should be managed as outlined within the RAP. Less common, but potential friable forms of asbestos include asbestos lagging (within pipe lagging), loose fill asbestos insulation), flexible materials (asbestos brake pads) or bonded ACM which that is in a degraded condition such that it can be broken or crumbled by hand pressure.
Buried wastes	Pockets of buried materials with higher concentration of wastes – different to what has previously been observed. May include building and demolition wastes, industrial waste, medical wastes, agricultural waste, animal carcases and may contain ACM. May include putrescible material (larger volumes of buried vegetation).
Chemical containers	Buried fuel or chemical drums/containers/tanks.
Coal tar asphalts	Typically, black asphaltic or tarry material with strong tarry odour or similar.
Industrial contaminated materials or liquids	Soils containing higher volumes of ash, slag, coal, bitumen or other 'non-natural' material. Unusually discoloured material. Soils with unusual (non-natural) odours.

Unexpected finds procedure

The Unexpected Finds Procedure is illustrated in the Figure E1 below and outlined in Table E2.

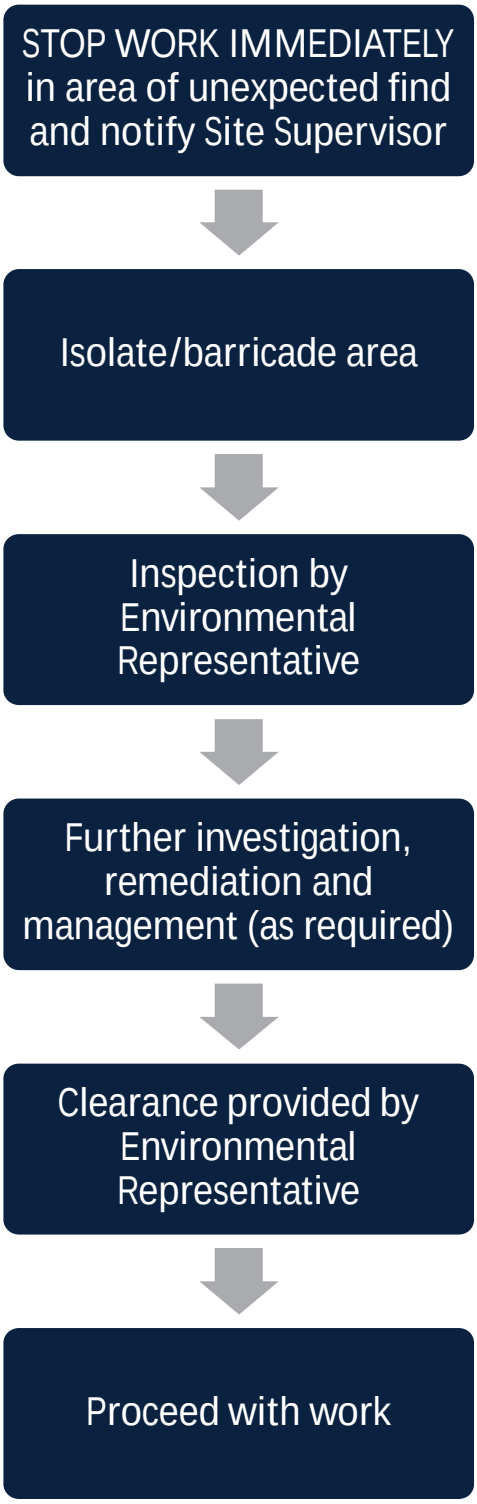

Figure E1: Flowchart of unexpected finds procedure

Table E2 Unexpected finds procedure

Procedural steps	Details
1. Unexpected find encountered	• STOP ALL WORK in the immediate/affected area. • Immediately notify the Site Supervisor • Isolate/barricade the area • Recommence works in an alternative area where practicable.
2. Assess the area	Environmental Representative to be notified to assess the unexpected find and provide advice as to the required scope of a contamination investigation in the area of the find. The assessment may require sampling of the material(s) as determined by the Environmental Representative. The Environmental Representative (in consultation with the Site Supervisor) will determine the appropriate management measures to be implemented.
3. Environmental management and work health safety management	For any work in identified areas the Environmental Representative shall advise as to levels of Personal Protective Equipment (PPE) required. A specific Environmental Work Method Statement (EWMS) may be required depending on the extent and magnitude of the contamination. Prior to any contamination investigation, management or remediation activities appropriate Safe Work Method Statements (SWMS) will be updated or prepared for review and approval by the Environmental Representative.
4. Remedial action and clearance	If excavation and offsite disposal is selected as the preferred remedial option, this will be carried out under the instruction of the Environmental representative with appropriate waste classification and validation/clearance.
5. Recommence works	Recommence works once remedial works have been implemented.

Appendix F Containment area calculations

Excavation - Note 6	Dimensions - Note 1			Calculated spoil volume estimates			
	Length (m)	Width (m)	Depth (metres, below ground level)	A. In-situ excavation volume - Note 2 (m^3)	B. Ex-situ spoil volume (incl. bulking factor) - Note 3 (m^3)	C. Estimated volume of installation - Note 4 (m^3)	D. Estimated surplus spoil volume - Note 5 (m^3)
Deep Exc 1	3	3	4.5	41	53	15	27
Deep Exc 2	3	3	4.5	41	53	15	27
Deep Exc 3	10	5	4.5	225	293	61	128
Gravity retaining walls - continous slab	220	1.3	1	143	186	114	157
Gravity retaining walls - backhoe piers	110	0.5	1	28	36	28	36
Stormwater pipework	600	0.5	1	150	195	107	152
Pipeline route	280	2.0	2	1008	1310	336	638
						Combined spoil volume (m^3)	1165
						Assumed proportion 'contaminated' soil	50%
						Estimated 'Contaminated' spoil volume (m^3)	583

Table Notes

1 Dimensions are 'indicative only' based on preliminary drawings and required to be confirmed.
2 In-situ volume assumes rectangular prism (i.e. vertical shoring)
3 Ex-situ volume assumes a 1.3 bulking factor
4 Estimated volume of installation is approximate only and required to be confirmed

5 Estimated surplus spoil volume estimated based on the following: D = B + C - A (assumes spoil reused as backfill within excavation)

IMPORTANT NOTE All volumes are preliminary estimates only for informint the RAP and subject to change based on design and actual site conditions. Under no circumstances should these volumes be used for cost/tender estimation purposes.

Appendix G **Data quality indicators**

DQIs for the project will be based on the field and laboratory considerations in NEPM Schedule B2 Appendix B, (NEPC 1999), which include:

- Completeness – a measure of the amount of useable data (expressed as %) from a data collection activity
- Comparability – the confidence (expressed qualitatively) that data may be considered to be equivalent for each sampling and analytical event
- Representativeness – the confidence (expressed qualitatively) that data are representative of each media present on the Site
- Precision – A quantitative measure of the variability (or reproducibility) of data
- Accuracy – a quantitative measure of the closeness of reported data to the true value.

The DQIs adopted for this assessment and checking of compliance is discussed in Table G-1 to G-5 below.

Table G1 - Data quality indicators - Completeness

Completeness					
Field considerations	DQI	DQI Compliance	Laboratory considerations	DQI	DQI Compliance
All critical locations will be sampled	Samples will be collected as per Section 6 (investigation) and Section 8.3 (validation)		All critical samples analysed.	Samples will be analysed as per Section 6 (investigation) and Section 8.3 (validation)	
All samples collected	Samples will be collected from relevant media as per Section 6 (investigation) and Section 8.3 (validation)		All analytes analysed according to sampling plan	Samples will be analysed as per Section 6 (investigation) and Section 8.3 (validation)	
SOPs appropriate and complied with	SMEC SOPs/Field instructions will be implemented		Appropriate methods and limits of reporting	Samples will be analysed by laboratories NATA accredited for the analyses to be performed and appropriate methods will be used. LORs will be less than or equal to the assessment criteria.	
Experienced sampler	An experienced SMEC environmental consultant will conduct the sampling		Sample documentation complete	CoCs will be returned, signed, and dated by laboratory. NATA endorsed laboratory certificates will be completed in accordance with NEPC (1999). Field documentation will be completed in accordance with SMEC SOPs.	
Documentation correct	Samples will be handled and transported under		Sample holding times complied with	Samples will be analysed within holding times	

	appropriate chain of custody documentation. Sample Receipt Advice (SRA) (or equivalent) from the laboratory will be reviewed to assess that samples are received cool and in good condition. Calibration certificates for the field instruments will be provided daily (or in accordance with manufacturers recommended calibration interval).			specified by NEPC (1999, amended 2013)	

Table G2 – Data quality indicators - Comparability

Comparability					
Field considerations	DQI	DQI Compliance	Laboratory considerations	DQI	DQI Compliance
Same SOPs used on each occasion	SMEC SOPs/field instructions will be implemented		Same sample analytical methods used	The same NATA accredited laboratory will be used to undertake analyses of all primary samples collected for this study. The laboratory will use the same analytical methods for each sample for each analytical parameter	
Experienced sampler	An experienced SMEC environmental consultant will conduct the sampling.		Same sample limits of reporting (LOR)		
Climatic conditions (temperature, rainfall, wind...)	Sampling for this work will be completed when necessary. Climatic conditions are not expected to cause issues for comparability of data		Same laboratories (justify/quantify if different)		
Same types of samples collected	Samples will be collected in the appropriate laboratory supplied container specific to the analyses performed.		Same units (justify/quantify if different)		

Table G3 – Data quality indicators - Representativeness

Representativeness					
Field considerations	DQI	DQI Compliance	Laboratory considerations	DQI	DQI Compliance
Appropriate media sampled according to sample plan	Samples will be collected and analysed as listed in Section 6 (investigation) and Section 8.3 (validation). Any variations will be justified.		All samples analysed according to sample plan	Samples will be collected and analysed as listed in Section 6 (investigation) and Section 8.3 (validation). NATA accredited environmental testing laboratories will implement a quality control plan conforming to Schedule B (3) 'Guideline on Laboratory Analysis of Potentially Contaminated Soils' of the National Environment Protection (Assessment of Site Contamination) Measure 1999.	
All media identified in sample plan sampled	Samples will be collected and analysed as listed in Section 6 (investigation) and Section 8.3 (validation).		All samples analysed according to sample plan	Samples will be collected and analysed as listed in Section 6 (investigation) and Section 8.3 (validation).	

Table G4 – Data quality indicators – Precision

Precision					
Field considerations	DQI	DQI Compliance	Laboratory considerations	DQI	DQI Compliance
SOPs appropriate and complied with	SMEC SOPs/field instructions will be implemented		Analysis of laboratory duplicates	The number of duplicate analyses should be the smaller of one per process batch or one per 10 samples.	
Analysis of: field duplicates	Collection of field duplicate samples including: • Field intra-laboratory duplicate samples (1 in 20 samples). • Field inter-laboratory duplicate samples (1 in 20 samples). Note: Field duplicates excluded for asbestos gravimetric sampling.		Analysis of: field duplicates	Field duplicates have relative percentage difference (RPD) control limits: • Less than 50% (soil) or 30% (groundwater), where result is greater than 10 times limit of reporting (LOR). • No limit where result is less than 10 times LOR.	
	Experienced and trained staff to carry out sampling. Sampling methodologies appropriate and complied with.		Analysis of: laboratory duplicates	Laboratory duplicates have relative percentage difference (RPD) control limits: • Results <10 times the LOR: No Limit • Results between 10-20 times the LOR:	

				RPD must lie between 0-50% • Results >20 times the LOR: RPD must lie between 0-30% In accordance with laboratory specific QC Acceptance criteria.	
			Analysis of laboratory-prepared volatile trip spikes (only if volatile contaminants are being tested)	Trip spikes recoveries were recorded between 60% and 110% for volatile contaminants (TRHC6-C10/BTEX)	
			Analysis of laboratory-prepared volatile trip blanks (only if volatile contaminants are being tested)	Trip blanks were free of detectable concentrations of volatile contaminants (TRHC6-C10/BTEX)	

Table G5 – Data quality indicators - Accuracy (Bias)

Accuracy (bias)					
Field considerations	DQI	DQI Compliance	Laboratory considerations	DQI	DQI Compliance
SOP appropriate and complied with	SMEC SOPs/field instructions will be implemented		Analysis of field blanks	A laboratory prepared trip blank will be analysed for soil sampling (as defined in AS4482.2-1999 and NEPC (1999). Results are to be less than the LOR	
Rinsate blank	Where reusable sampling equipment is utilised (if any) a rinsate blank will be analysed and results compared against the PQL		Analysis of method blank	Method blanks will be analysed as per NEPC (1999) at least 1 per process batch (typically 1 in 20). Results to be less than LOR	
Trip spike	Trip spikes are collected and analysed together with samples		Analysis of matrix spike	Matrix spikes will be analysed as per NEPC (1999) (one matrix spike per soil type per process batch). Results to be within laboratory acceptance limits based on NEPC (1999). Acceptance limits are on the laboratory certificates (typically 70-130%, depends on analyte. A lower range typically accepted for phenols 30%-130%)	

Preservation, transport, and storage	Samples appropriately preserved in laboratory supplied containers, stored, and transported correctly and within holding times		Analysis of surrogate spike	Surrogates will be analysed as per NEPC Schedule B3 (1999). All samples spiked where appropriate (e.g. chromatographic analysis of organics). Acceptance limits 70% to 130% (inorganics), or 50% to 150% (organics).	
			Analysis of laboratory control samples	Laboratory control samples (LCS) will be analysed as per NEPC Schedule B3 (1999) (at least 1 per batch). Results to be within laboratory acceptance limits based on NEPC (1999). Acceptance limits are on the laboratory certificates (typically 70-130%, depends on analyte)	
			Analysis of laboratory-prepared spikes	Spikes will be analysed as per NEPC Schedule B3 (1999). Recovery results to be within laboratory acceptance limits based on NEPC Schedule B3 (1999). Acceptance limits are on the laboratory certificates.	

Member of the Surbana Jurong Group

SMEC

Level 2, 6-8 Regent Street, Wollongong NSW 2500
Phone: +61 2 4243 4400
Email: Wollongong@smec.com

We're redefining exceptional
Through our specialist expertise, we're challenging boundaries to deliver advanced infrastructure solutions.

www.smec.com