EIS Appendix 1: Site Plans, Swept Path Diagrams and Equipment Technical Drawings

BUNG - CLOSING OFF DISCHARGE OUTLET

ISOLATED STORMWATER PITS AND GRATES

BLIND SUMP

BLIND PITS

NEW SLIM LINE RAIN WATER TANKS

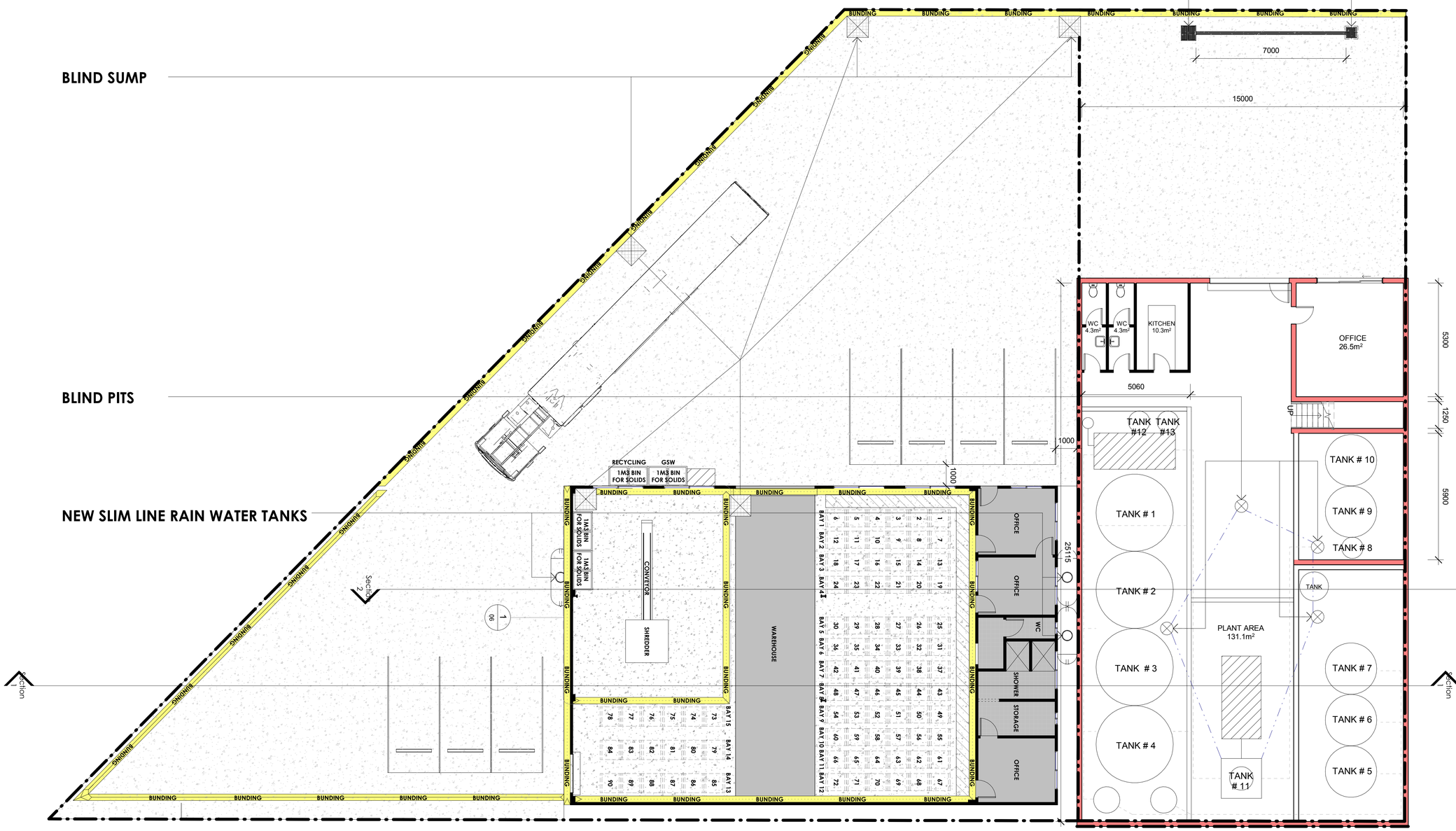

REV	DESCRIPTION	DATE	BY
A	APPLICATION FOR APPROVAL	26 06 20	

FOR DA APPROVAL

bainidesign

BAINI DESIGN
ABN 51 068 732 593
1B Villiers street
Parramatta, NSW 2150
Sydney, Australia
Phone + 61 2 9188 8250
info@bainidesign.com.au
www.bainidesign.com.au

PROJECT TITLE
PROPOSED INDUSTRIAL ALTERATION AND ADDITION
14 - 16 Kiora Crescent, Yennora

DRAWING TITLE
FLOOR PLANS

PROJECT NUMBER	DRAWING NUMBER	DATE	REVISION
20097	01	06/07/17	A
	SCALE @ A1	DRAWN BY	CHECKED BY
	1 : 100	GA	CB

This drawing is copyright and the property of Baini Design. Larger scale drawings and written dimensions take preference. Do not scale from drawing all dimensions to be verified on site before commencement of work. All discrepancies to be brought to the attention of the author.

1 : 100 (1)

SITE PLAN

REV	DESCRIPTION	DATE	BY
A	APPLICATION FOR APPROVAL	26 06 20	

FOR DA APPROVAL

bainidesign

BAINI DESIGN
ABN 51 068 732 593
18 Villiers street
Parramatta, NSW 2150
Sydney, Australia
Phone + 61 2 9188 8250
info@bainidesign.com.au
www.bainidesign.com.au

PROJECT TITLE
PROPOSED INDUSTRIAL ALTERATION AND ADDITION
14 - 16 Kiora Crescent, Yennora

DRAWING TITLE
SITE PLAN

PROJECT NUMBER	DRAWING NUMBER	DATE	REVISION
20097	02	06/26/20	A
	SCALE @ A1	DRAWN BY	CHECKED BY
	1 : 100	GA	CB

This drawing is copyright and the property of Baini Design. Larger scale drawings and written dimensions take preference. Do not scale from drawing all dimensions to be verified on site before commencement of work. All discrepancies to be brought to the attention of the author.

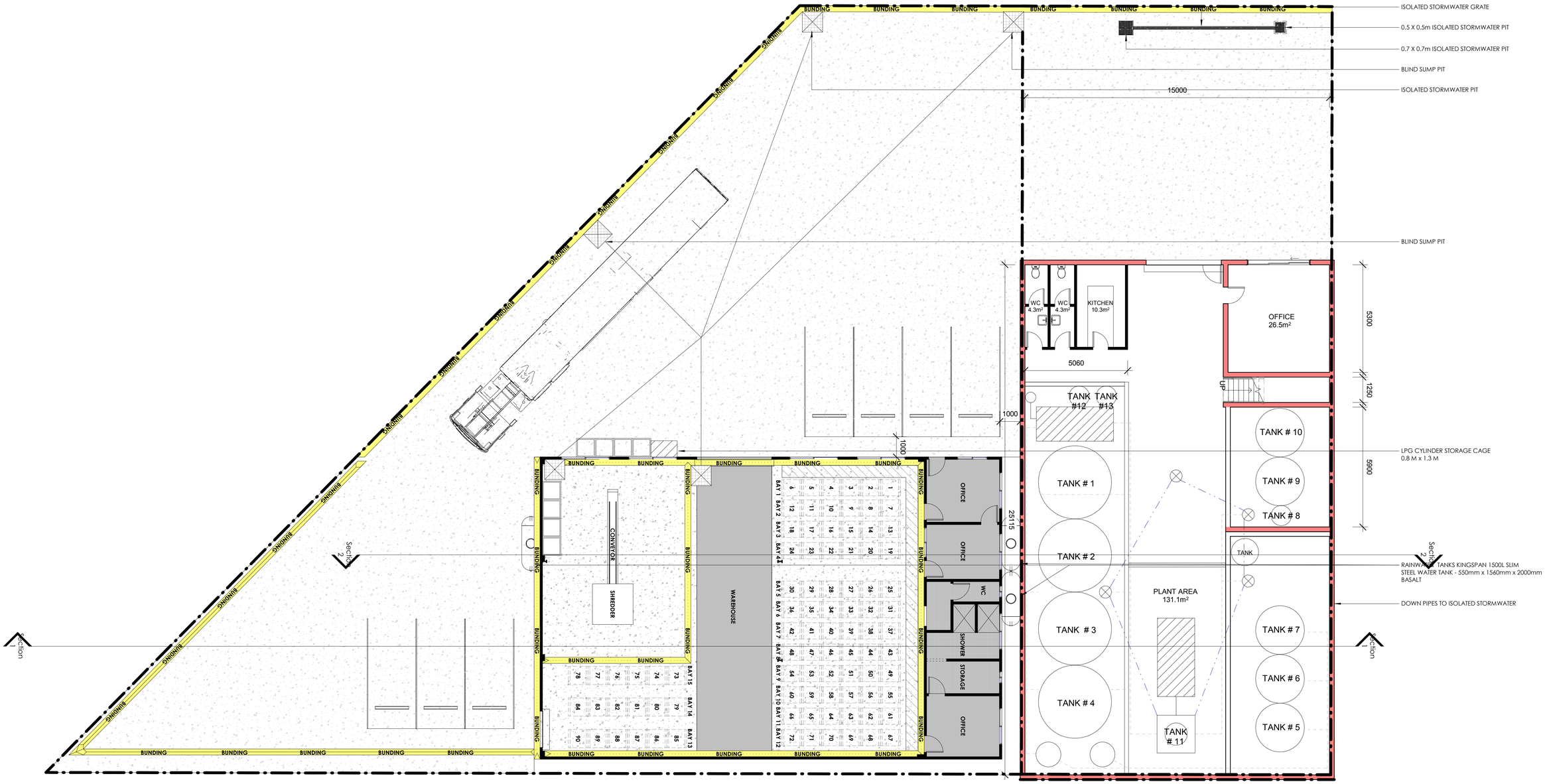

1 : 100 (1)

DRAINAGE PLAN

REV	DESCRIPTION	DATE	BY
A	APPLICATION FOR APPROVAL	26 06 20	

FOR DA APPROVAL

bainidesign

BAINI DESIGN
ABN 51 068 732 593
1B Villiers street
Parramatta, NSW 2150
Sydney, Australia
Phone + 61 2 9188 8250
info@bainidesign.com.au
www.bainidesign.com.au

PROJECT TITLE
PROPOSED INDUSTRIAL ALTERATION AND ADDITION
14 - 16 Kiora Crescent, Yennora

DRAWING TITLE
DRAINAGE PLAN

PROJECT NUMBER	DRAWING NUMBER	DATE	REVISION
20097	03	06/26/20	A
	SCALE @ A1	DRAWN BY	CHECKED BY
	1 : 100	GA	CB

This drawing is copyright and the property of Baini Design. Larger scale drawings and written dimensions take preference. Do not scale from drawing all dimensions to be verified on site before commencement of work. All discrepancies to be brought to the attention of the author.

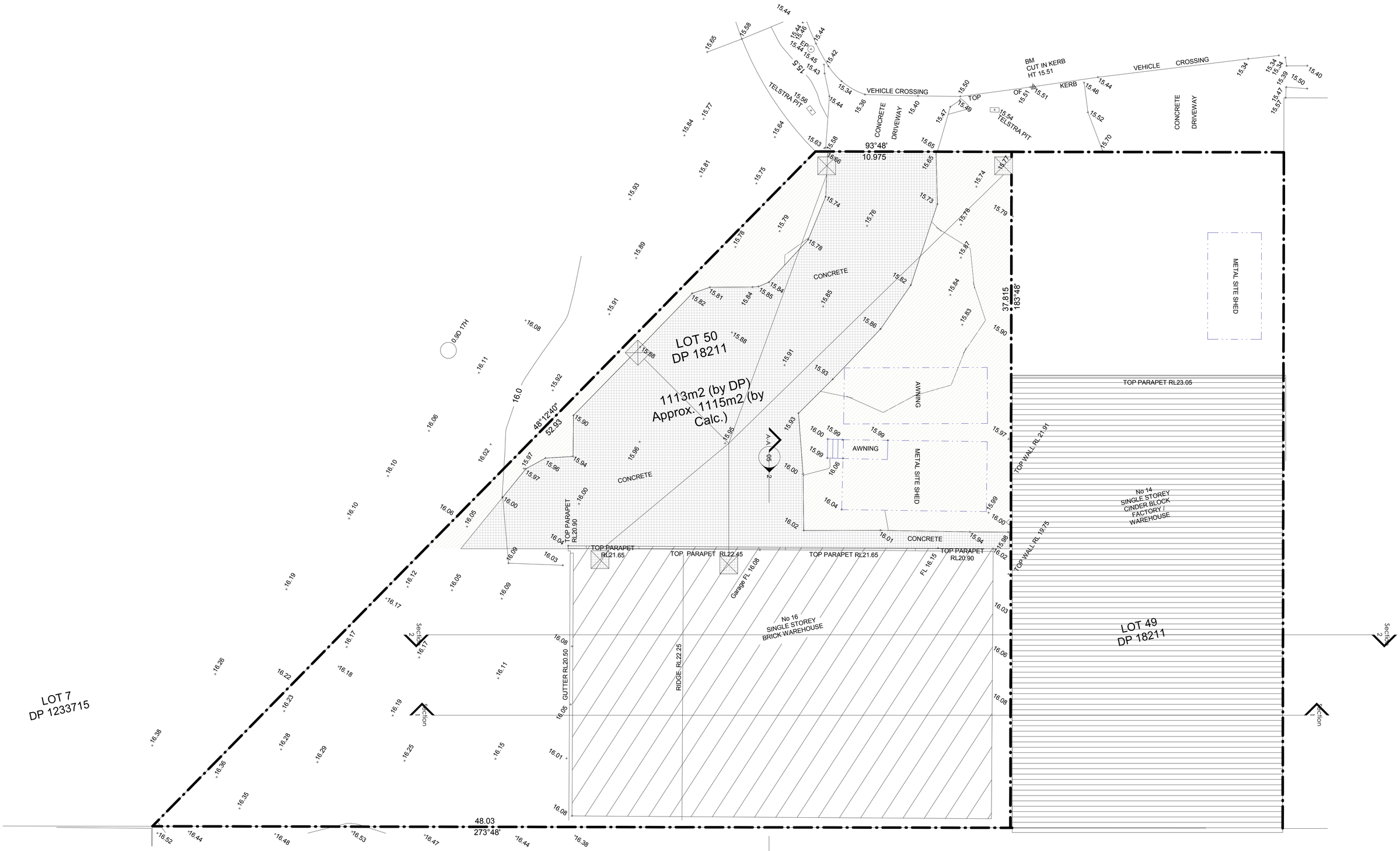

1 : 100 (1)

DEMOLITION PLAN

REV	DESCRIPTION	DATE	BY
A	APPLICATION FOR APPROVAL	26 06 20	

TO BE DEMOLISHED

FOR DA APPROVAL

bainidesign

BAINI DESIGN
ABN 51 068 732 593
1B Villiers street
Parramatta, NSW 2150
Sydney, Australia
Phone + 61 2 9188 8250
info@bainidesign.com.au
www.bainidesign.com.au

PROJECT TITLE
PROPOSED INDUSTRIAL ALTERATION AND ADDITION
14 - 16 Kiora Crescent, Yennora

DRAWING TITLE
DEMOLITION PLAN

PROJECT NUMBER	DRAWING NUMBER	DATE	REVISION
20097	04	06/26/20	A
	SCALE @ A1	DRAWN BY	CHECKED BY
	1 : 100	GA	CB

This drawing is copyright and the property of Baini Design. Larger scale drawings and written dimensions take preference. Do not scale from drawing all dimensions to be verified on site before commencement of work. All discrepancies to be brought to the attention of the author.

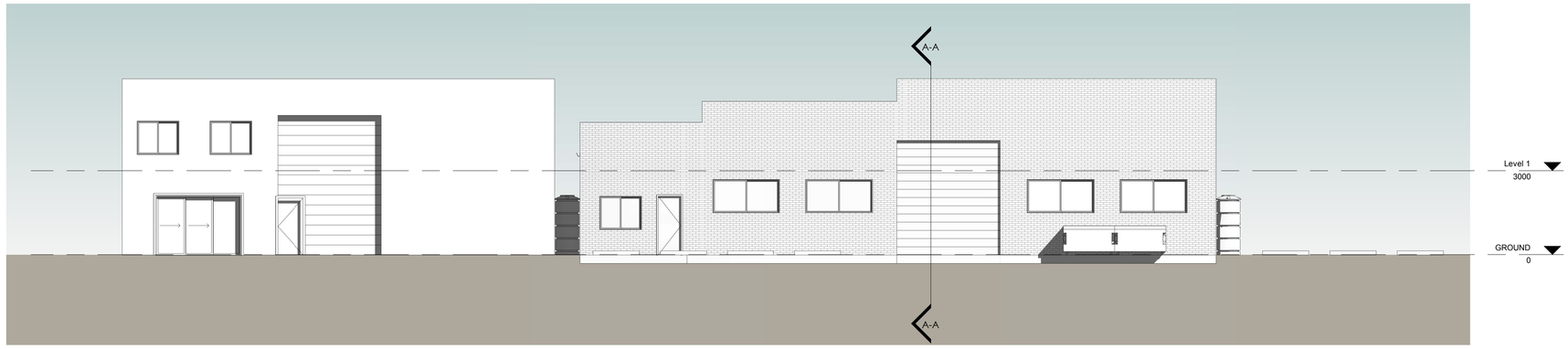

2 WEST ELEVATION
1 : 100

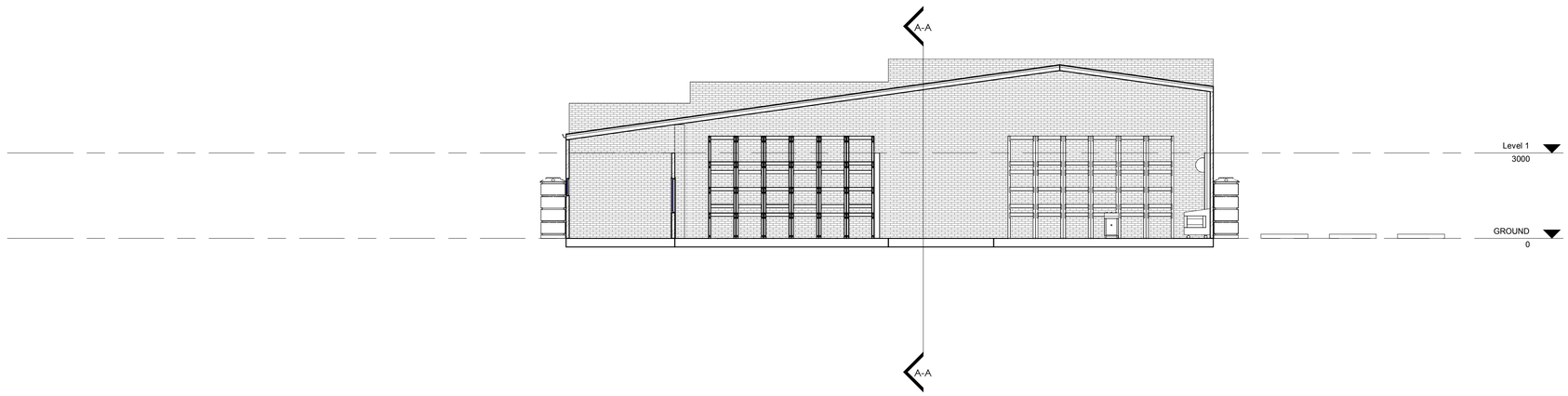

3 Section 2
1 : 100

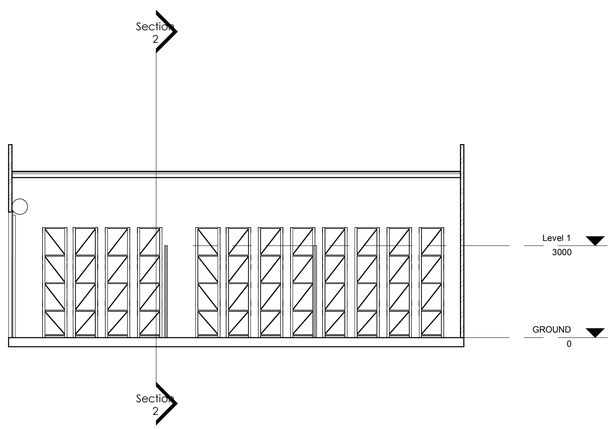

1 A-A
1 : 100

REV	DESCRIPTION	DATE	BY

DRAFT

bainidesign

BAINI DESIGN
ABN 51 068 732 593
1B Villiers street
Parramatta, NSW 2150
Sydney, Australia
Phone + 61 2 9188 8250
info@bainidesign.com.au
www.bainidesign.com.au

PROJECT TITLE
PROPOSED INDUSTRIAL ALTERATION AND ADDITION
14 - 16 Kiora Crescent, Yennora

DRAWING TITLE
ELEVATIONS . SECTIONS

PROJECT NUMBER	DRAWING NUMBER	DATE	REVISION
20097	05	09/04/20	
	SCALE @ A1	DRAWN BY	CHECKED BY
	1 : 100	GA	CB

This drawing is copyright and the property of Baini Design. Larger scale drawings and written dimensions take preference. Do not scale from drawing all dimensions to be verified on site before commencement of work. All discrepancies to be brought to the attention of the author.

1 SHREDDER DETAIL
1 : 50

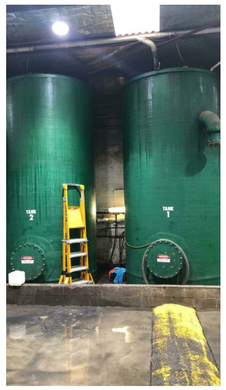

TANKS 1 & 2

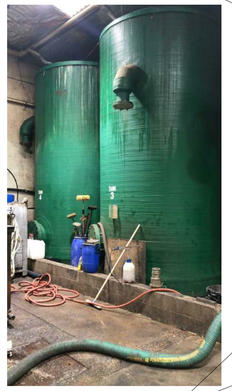

TANKS 3 & 4

TANKS 12 & 13

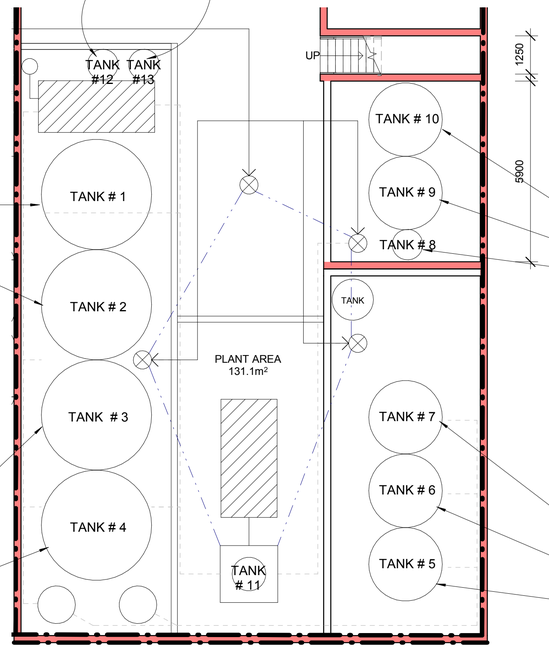

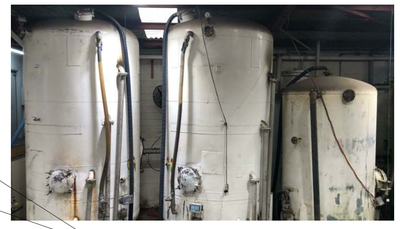

TANKS 8, 9 & 10

TANKS 5, 6 & 7

2 TANKS DETAIL
1 : 100

Tank 1
Liquid & sewer (K130) & stormwater
Sullage N205 landfill leachates M250 surfactants
Liquid J120

Tank 2
Liquid & sewer (K130) & stormwater
Sullage N205 landfill leachates M250 surfactants

Tank 3
Liquid & sewer (K130) & stormwater
Sullage N205 landfill leachates M250 surfactants

Tank 4
Liquid & sewer (K130) & stormwater
Sullage N205 landfill leachates M250 surfactants

Tank 5/6
Liquid J120

Tank 7 (settling)
Liquid J120
Liquid & sewer (K130) & stormwater

Tank 8/9
Liquid J120

Tank 10
Liquid grease trap waste

Tank 11-east
Liquid J120

Tank 11-west
Liquid & sewer (K130) & stormwater
Sullage N205 landfill leachates M250 surfactants

Tank 12
Liquid & sewer (K130) & stormwater
Sullage N205 landfill leachates M250 surfactants
Liquid J120

Tank 13
Liquid & sewer (K130) & stormwater
Sullage N205 landfill leachates M250 surfactants
Liquid J120

REV	DESCRIPTION	DATE	BY

DRAFT

bainidesign

BAINI DESIGN
ABN 51 068 732 593
1B Villiers street
Parramatta, NSW 2150
Sydney, Australia
Phone + 61 2 9188 8250
info@bainidesign.com.au
www.bainidesign.com.au

PROJECT TITLE
PROPOSED INDUSTRIAL ALTERATION AND ADDITION
14 - 16 Kiora Crescent, Yennora

DRAWING TITLE
TANK & SHREDDER DETAIL

PROJECT NUMBER	DRAWING NUMBER	DATE	REVISION
20097	06	09/04/20	
	SCALE @ A1	DRAWN BY	CHECKED BY
	As indicated	GA	CB

This drawing is copyright and the property of Baini Design. Larger scale drawings and written dimensions take preference. Do not scale from drawing all dimensions to be verified on site before commencement of work. All discrepancies to be brought to the attention of the author.

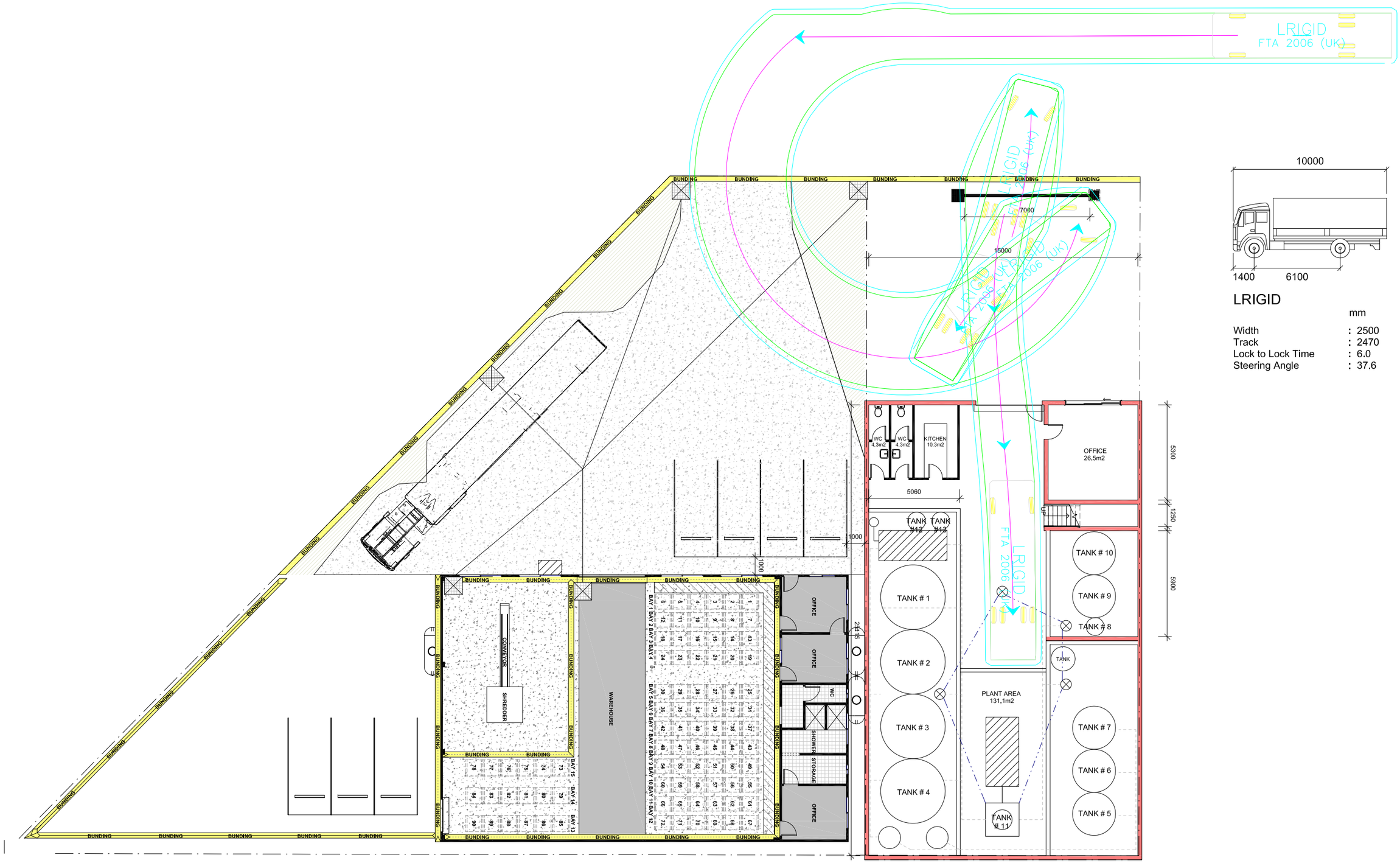

LRIGID

	mm
Width	: 2500
Track	: 2470
Lock to Lock Time	: 6.0
Steering Angle	: 37.6

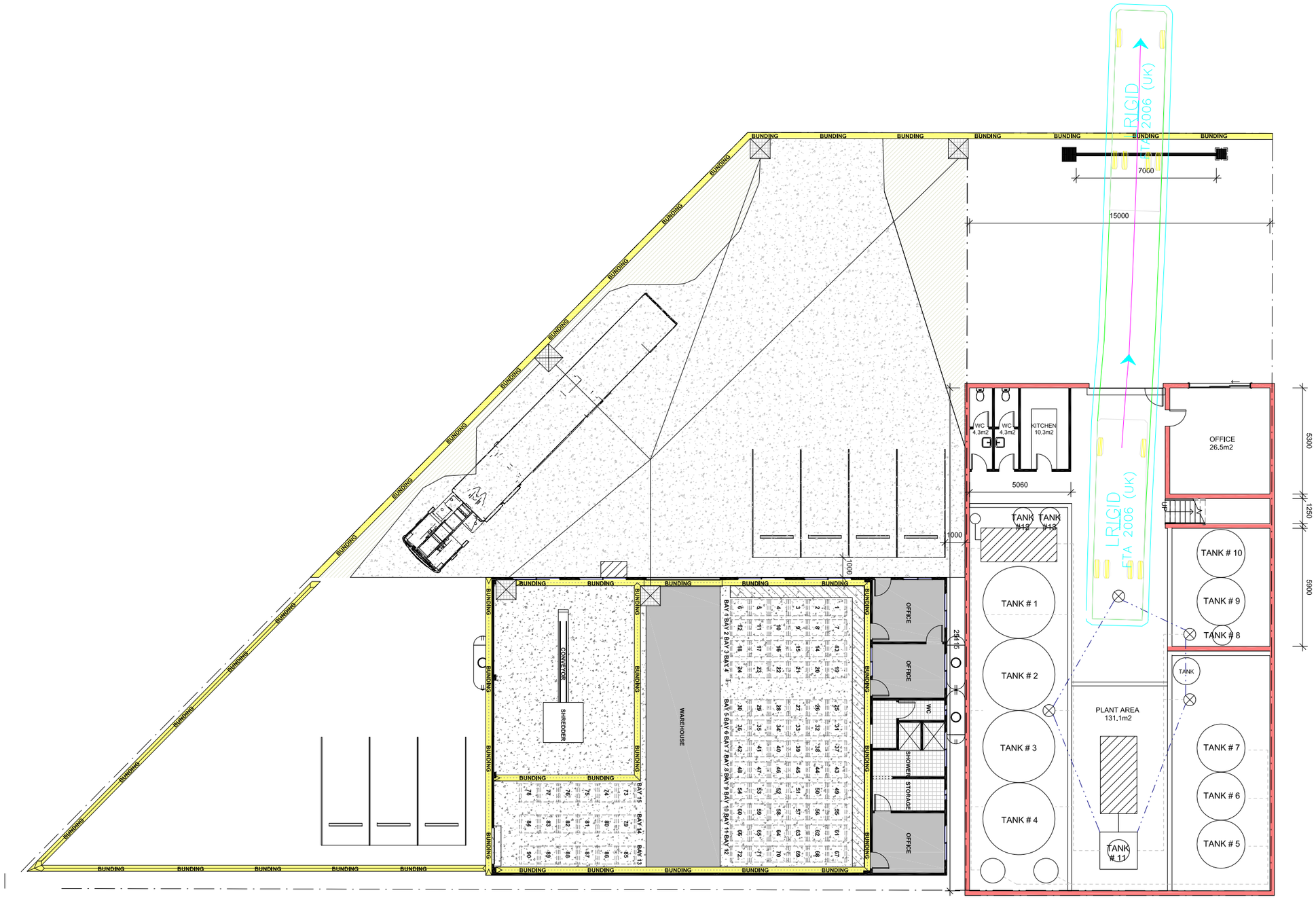

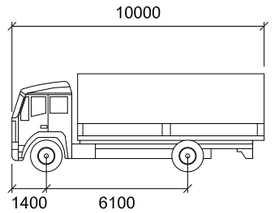

LRIGID

	mm
Width	: 2500
Track	: 2470
Lock to Lock Time	: 6.0
Steering Angle	: 37.6

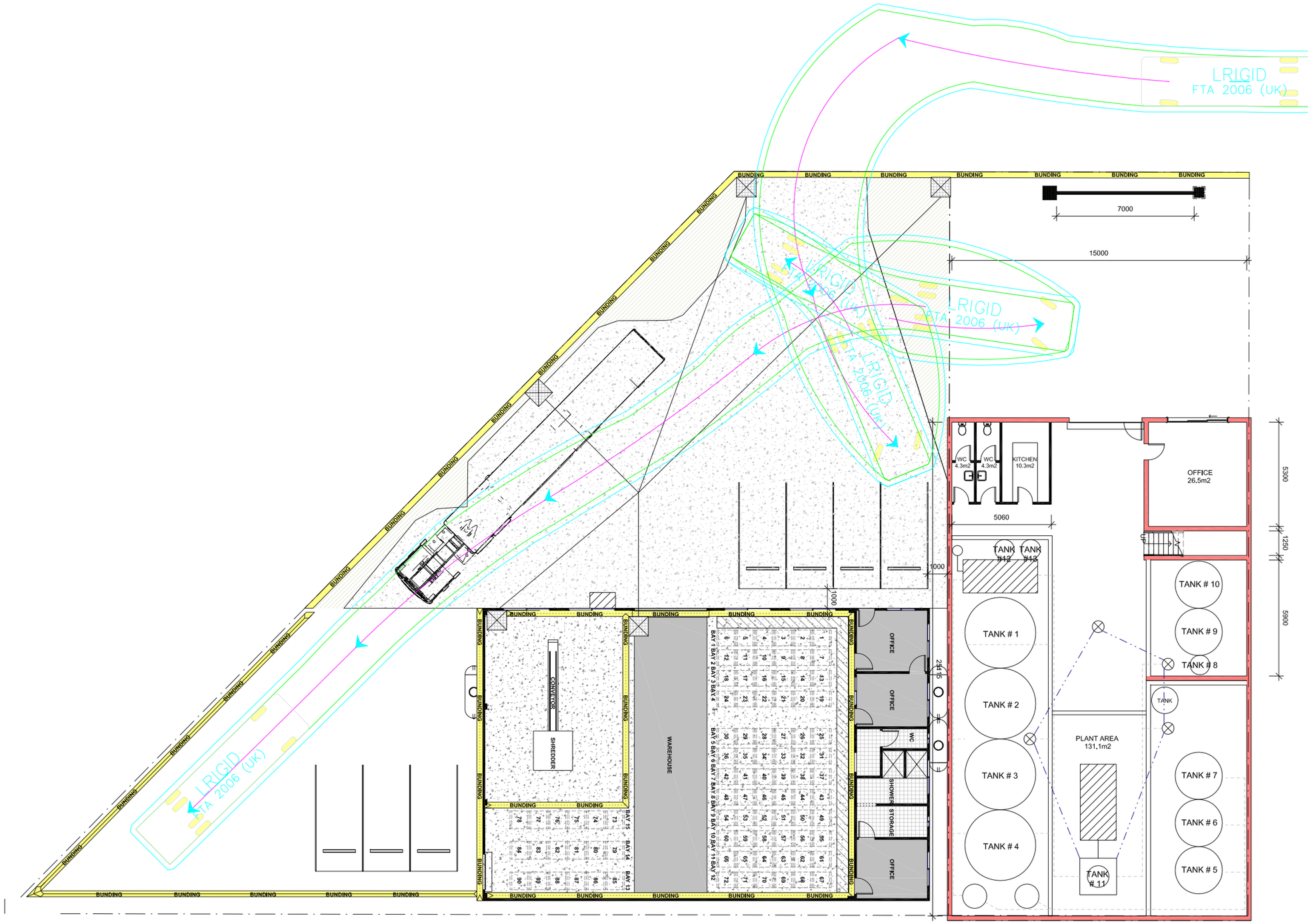

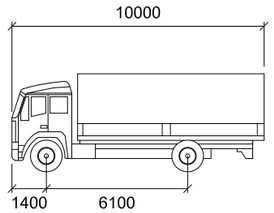

LRIGID

	mm
Width	: 2500
Track	: 2470
Lock to Lock Time	: 6.0
Steering Angle	: 37.6

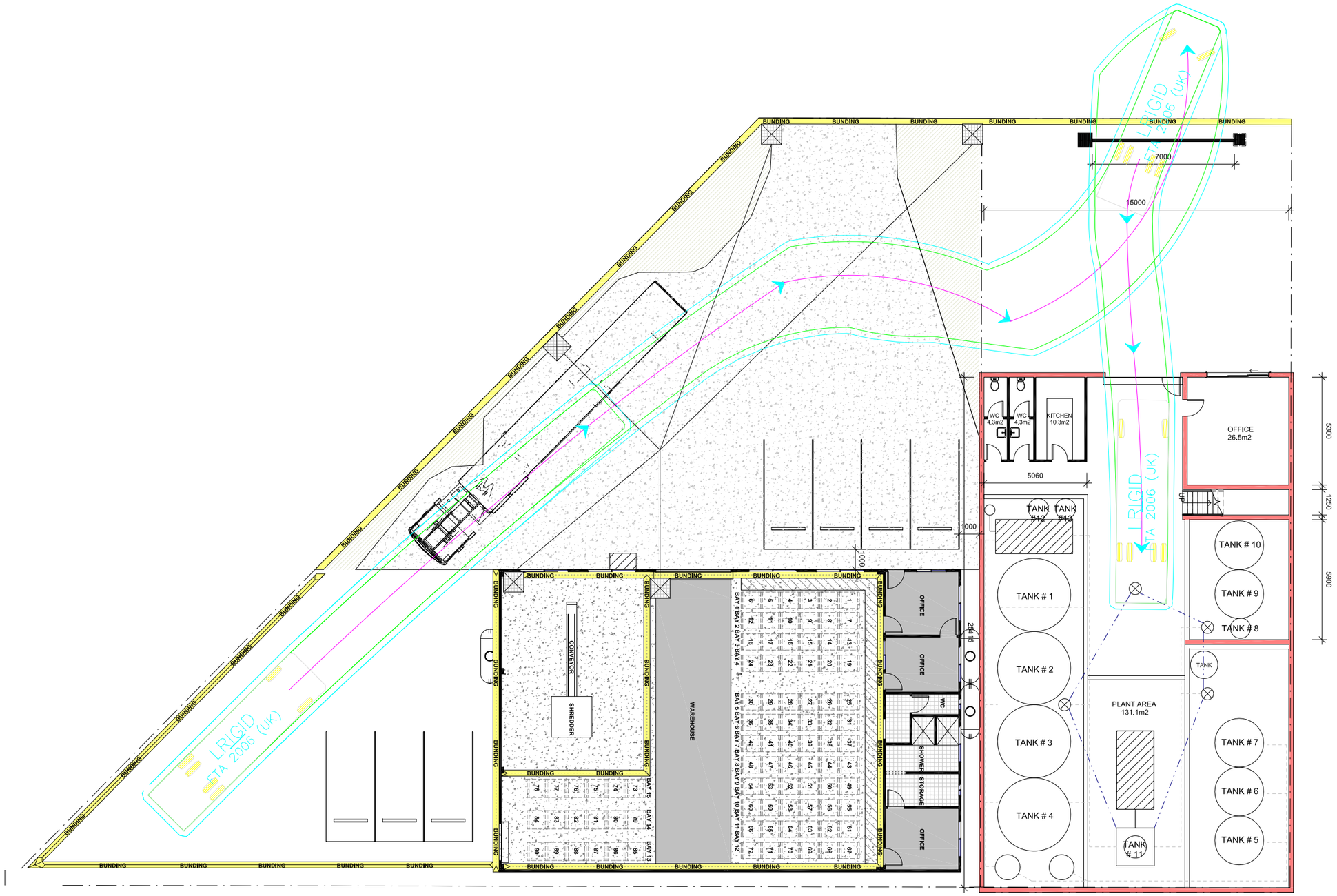

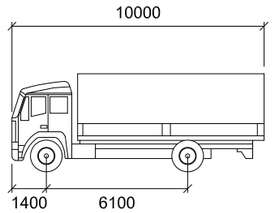

LRIGID

		mm
Width	:	2500
Track	:	2470
Lock to Lock Time	:	6.0
Steering Angle	:	37.6

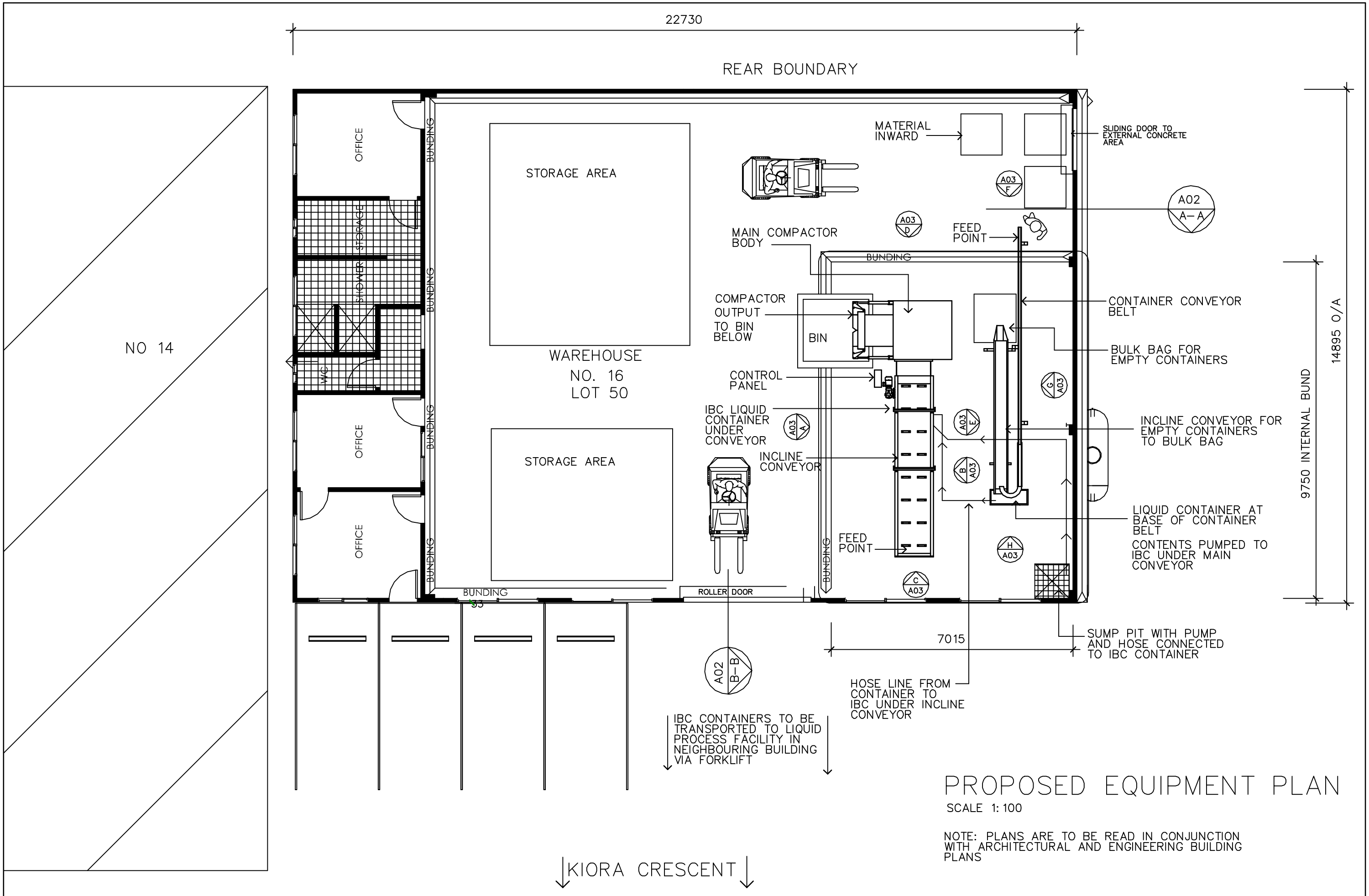

PROPOSED EQUIPMENT PLAN

SCALE 1: 100

NOTE: PLANS ARE TO BE READ IN CONJUNCTION WITH ARCHITECTURAL AND ENGINEERING BUILDING PLANS

ISSUE	BY	DESCRIPTION	DATE
A	GR	ISSUE FOR APPROVAL	22–10–20

envirowaste services group pty ltd

COPYRIGHT: THIS DESIGN AND THE ASSOC. DOCUMENTATION IS SUBJECT TO COPYRIGHT LAWS AND MAY NOT BE REPRODUCED IN ANY FORM WITHOUT WRITTEN CONSENT FROM STYLE DEVELOPMENTS

NORTH

DIAL BEFORE YOU DIG www.TWOcall.au

GENERAL NOTES:
1. ALL DIMENSIONS AND FLOOR AREAS ARE TO BE VERIFIED BY THE BUILDER PRIOR TO THE COMMENCEMENT OF ANY BUILDING WORKS. ANY DISCREPANCIES ARE TO BE BROUGHT TO THE ATTENTION OF THE DESIGNER
2. LEVELS SHOWN ARE APPROXIMATE UNLESS ACCOMPANIED BY REDUCED LEVELS FROM A DETAILED SURVEY
3. FIGURED DIMENSIONS MUST BE TAKEN IN PREFERENCE TO SCALING
4. ALL BOUNDARY CLEARANCES MUST BE VERIFIED BY THE SURVEYOR PRIOR TO COMMENCEMENT OF ANY BUILDING WORK
5. WHERE ENGINEERING DRAWINGS ARE REQUIRED SUCH MUST TAKE PRECEDENT OVER THIS DRAWING
6. STORMWATER TO BE DISCHARGED TO COUNCILS'S REQUIREMENTS AND AS 3500.3–2003
7. ALL SERVICES TO BE LOCATED AND VERIFIED BY THE BUILDER WITH RELEVANT AUTHORITIES BEFORE ANY BUILDING WORK COMMENCES
8. ALL WORKS TO BE COMPLETED IN ACCORDANCE WITH THE AUSTRALIAN STANDARDS
9. TERMITE PROTECTION TO BE INSTALLED IN ACCORDANCE WITH AS3660.1–1995 PART 1 NEW BUILDINGS
10. SMOKE ALARMS TO BE INSTALLED BY A LICENSED ELECTRICIAN IN ACCORDANCE WITH THE

STYLE DEVELOPMENTS PTY LTD
2051–2053 THE NORTHERN ROAD
GLENMORE PARK NSW 2745
M: +61 2 419 404 103
E: info@styledevelopments.com.au
W: www.Styledevelopments.com.au
ARCHITECTURAL DESIGN | ENGINEERING
CONSTRUCTION | PROJECT MANAGEMENT

styledevelopments
DESIGN | PROJECT MANAGEMENT | PROPERTY DEVELOPMENT | CONSTRUCTION

PROJECT	EQUIPMENT DETAILS 16 KIORA CRESCENT YENNORA LOT 50 DP18211		PROJECT NO. 2005
CLIENT	ENVIROWASTE SERVICES GROUP		SCALE 1: 100
TITLE	FLOOR PLAN	JOB NO. 1020/20	SHEET NO. A01 / ISSUE A

A3 SHEET

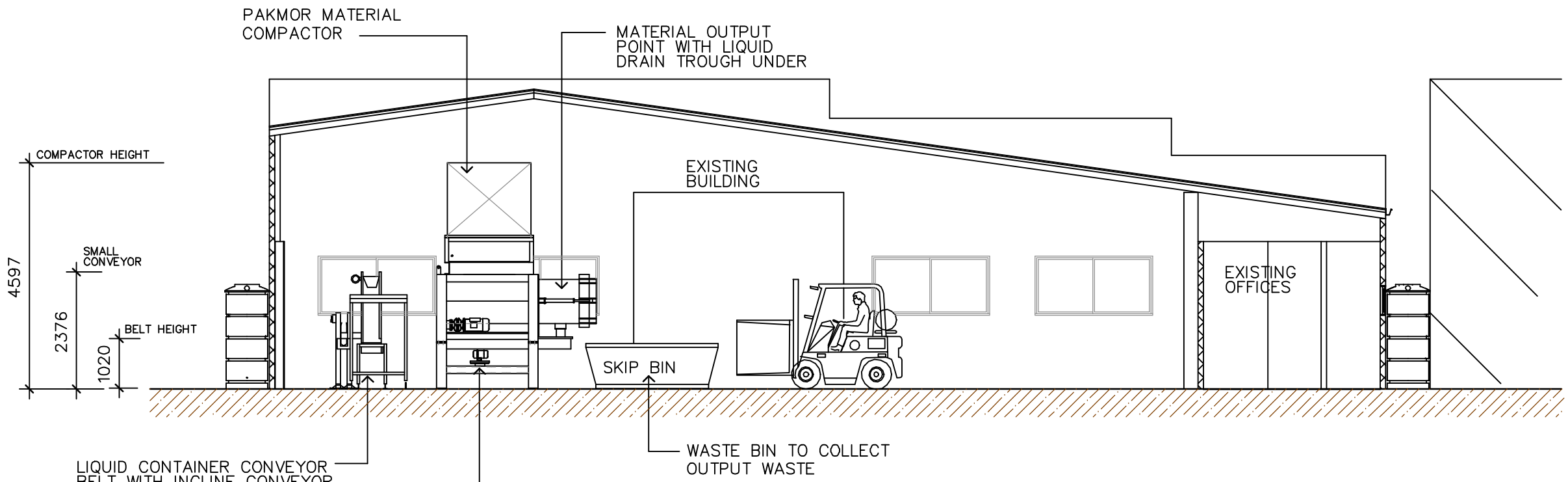

SECTION A–A / A01
SCALE 1: 100

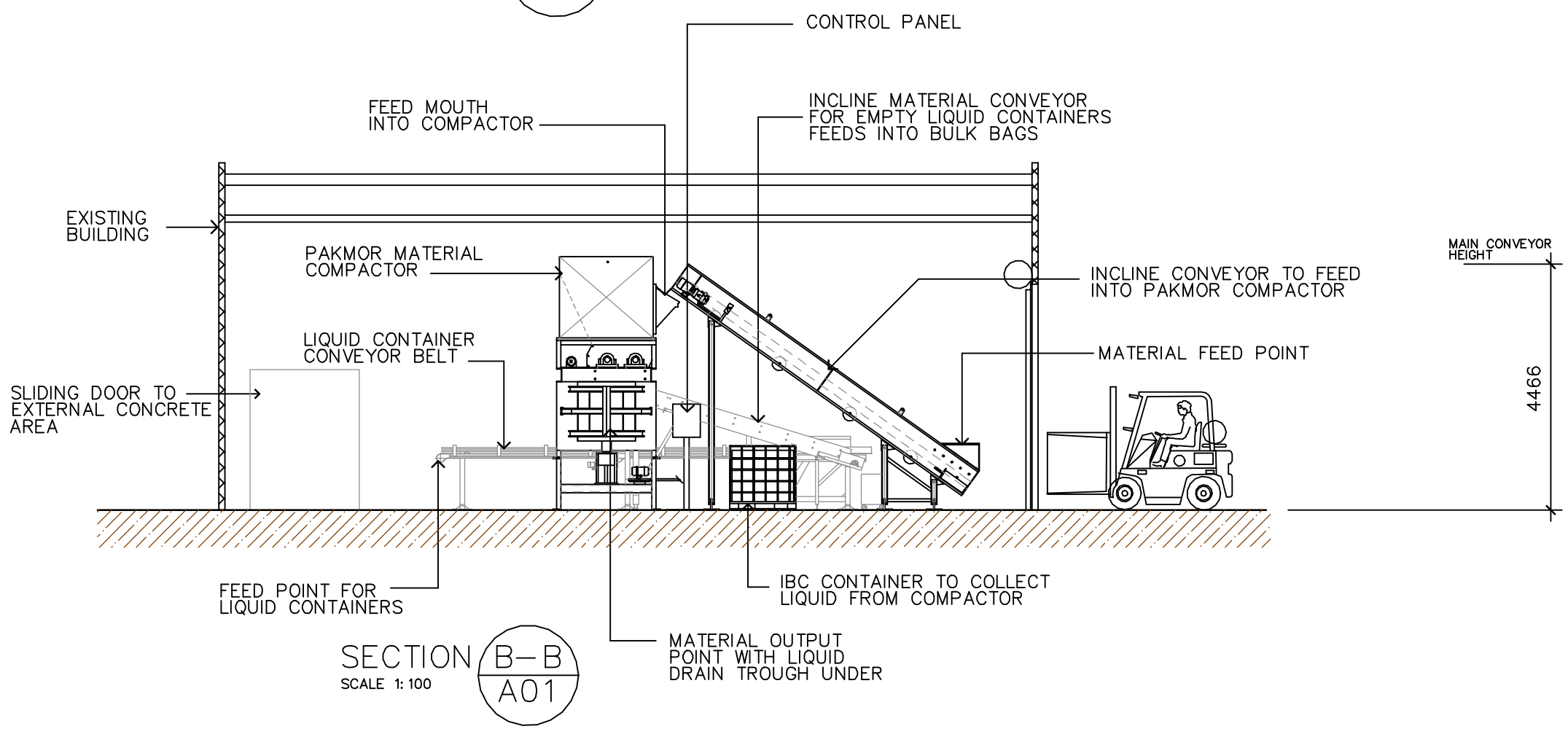

SECTION B–B / A01
SCALE 1: 100

ISSUE	BY	DESCRIPTION	DATE
A	GR	FOR CDC	15–8–20

envirowaste services group pty ltd

COPYRIGHT: THIS DESIGN AND THE ASSOC. DOCUMENTATION IS SUBJECT TO COPYRIGHT LAWS AND MAY NOT BE REPRODUCED IN ANY FORM WITHOUT WRITTEN CONSENT FROM STYLE DEVELOPMENTS

DIAL BEFORE YOU DIG www.1100.com.au

GENERAL NOTES:
1. ALL DIMENSIONS AND FLOOR AREAS ARE TO BE VERIFIED BY THE BUILDER PRIOR TO THE COMMENCEMENT OF ANY BUILDING WORKS. ANY DISCREPANCIES ARE TO BE BROUGHT TO THE ATTENTION OF THE DESIGNER
2. LEVELS SHOWN ARE APPROXIMATE UNLESS ACCOMPANIED BY REDUCED LEVELS FROM A DETAILED SURVEY
3. FIGURED DIMENSIONS MUST BE TAKEN IN PREFERENCE TO SCALING
4. ALL BOUNDARY CLEARANCES MUST BE VERIFIED BY THE SURVEYOR PRIOR TO COMMENCEMENT OF ANY BUILDING WORK
5. WHERE ENGINEERING DRAWINGS ARE REQUIRED SUCH MUST TAKE PRECEDENT OVER THIS DRAWING
6. STORMWATER TO BE DISCHARGED TO COUNCILS'S REQUIREMENTS AND AS 3500.3–2003
7. ALL SERVICES TO BE LOCATED AND VERIFIED BY THE BUILDER WITH RELEVANT AUTHORITIES BEFORE ANY BUILDING WORK COMMENCES
8. ALL WORKS TO BE COMPLETED IN ACCORDANCE WITH THE AUSTRALIAN STANDARDS
9. TERMITE PROTECTION TO BE INSTALLED IN ACCORDANCE WITH AS3660.1–1995 PART 1 NEW BUILDINGS
10. SMOKE ALARMS TO BE INSTALLED BY A LICENSED ELECTRICIAN IN ACCORDANCE WITH THE

STYLE DEVELOPMENTS PTY LTD
2051–2053 THE NORTHERN ROAD
GLENMORE PARK NSW 2745
M: +61 2 419 404 103
E: info@styledevelopments.com.au
W: www.Styledevelopments.com.au
ARCHITECTURAL DESIGN | ENGINEERING
CONSTRUCTION | PROJECT MANAGEMENT
styledevelopments
DESIGN · PROJECT MANAGEMENT · PROPERTY DEVELOPMENT · CONSTRUCTION

PROJECT	EQUIPMENT DETAILS 16 KIORA CRESCENT YENNORA LOT 50 DP18211
PROJECT NO.	2005
CLIENT	ENVIROWASTE SERVICES GROUP
SCALE	1: 100
TITLE	SECTIONS
JOB NO.	1020/20
SHEET NO.	A02
ISSUE	A

A3 SHEET

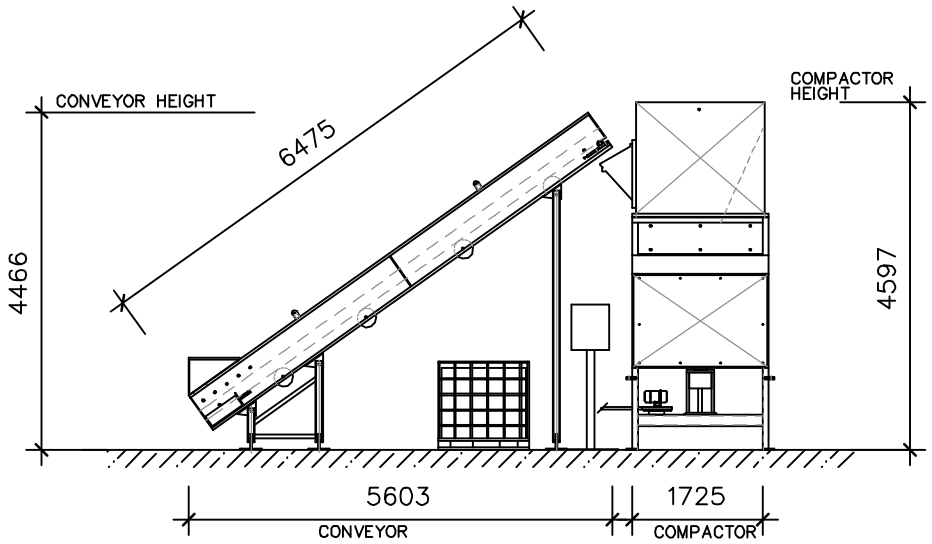

COMPACTOR AND CONVEYOR EQUIPMENT ELEVATION (B / A01)
SCALE 1: 100

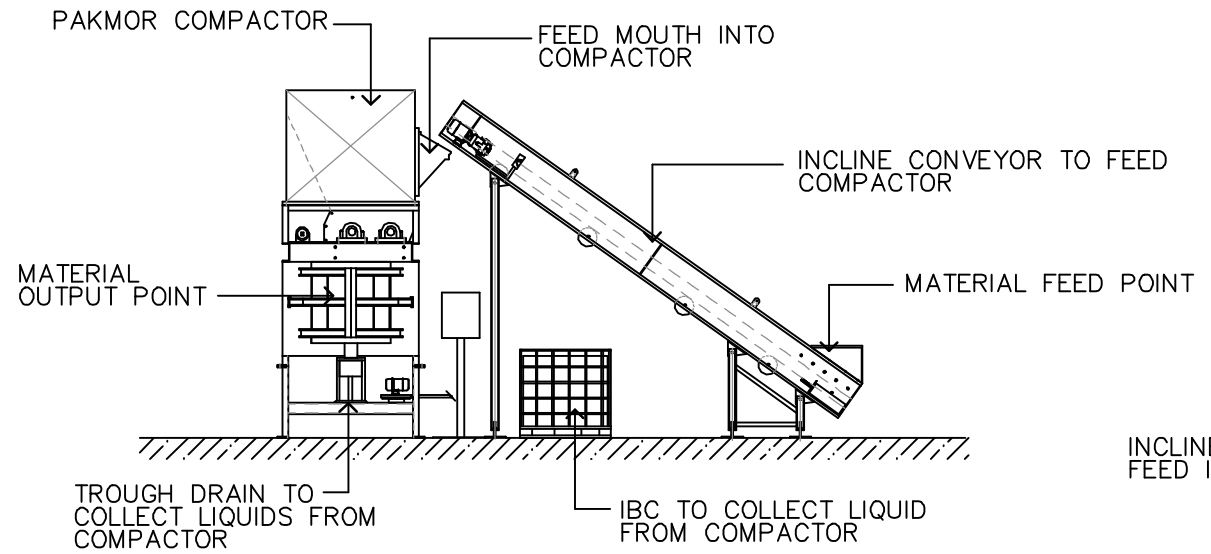

COMPACTOR AND CONVEYOR EQUIPMENT ELEVATION (A / A01)
SCALE 1: 100

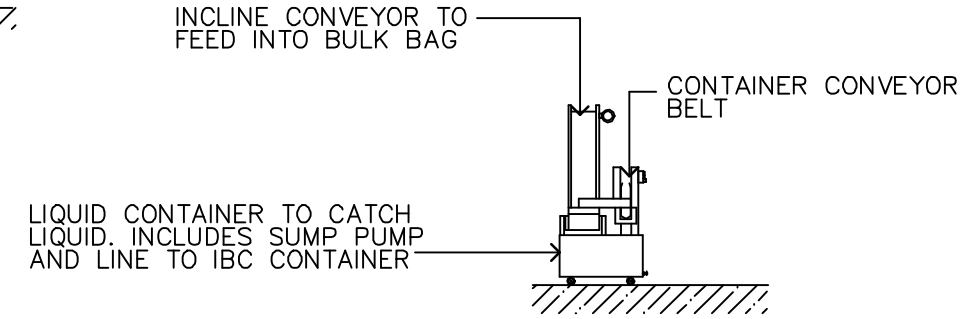

EQUIPMENT ELEVATION (H / A01)
SCALE 1: 100

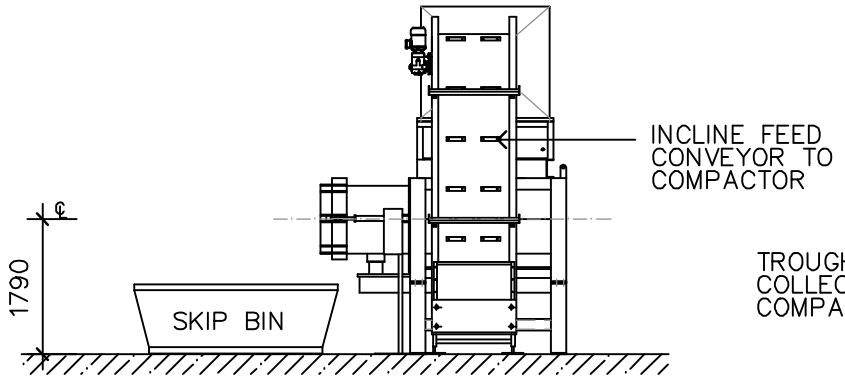

COMPACTOR AND CONVEYOR EQUIPMENT ELEVATION (C / A01)
SCALE 1: 100

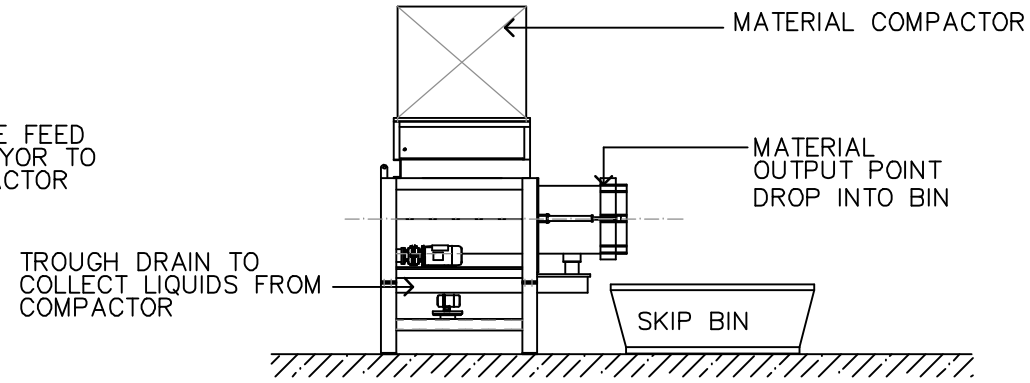

COMPACTOR AND CONVEYOR EQUIPMENT ELEVATION (D / A01)
SCALE 1: 100

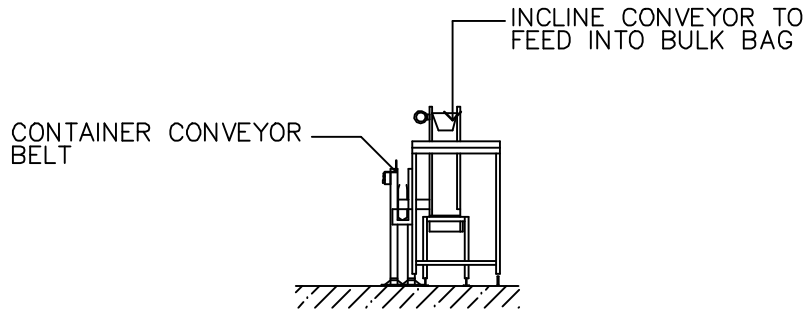

EQUIPMENT ELEVATION (F / A01)
SCALE 1: 100

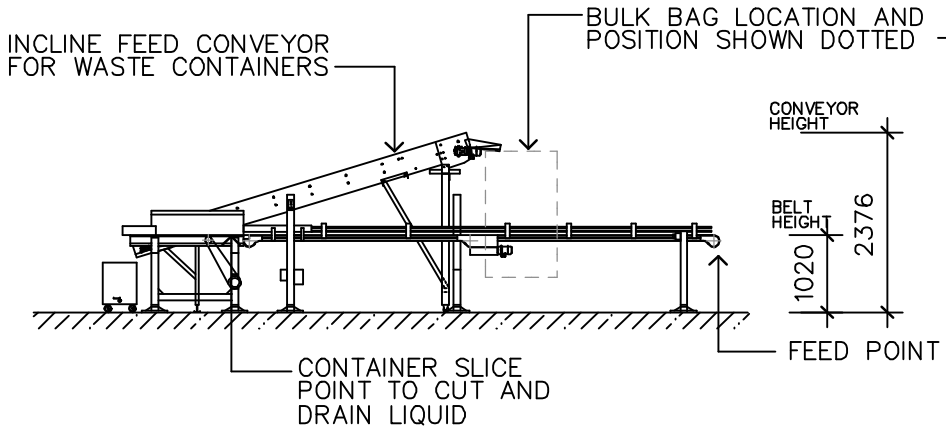

EQUIPMENT ELEVATION (G / A01)
SCALE 1: 100

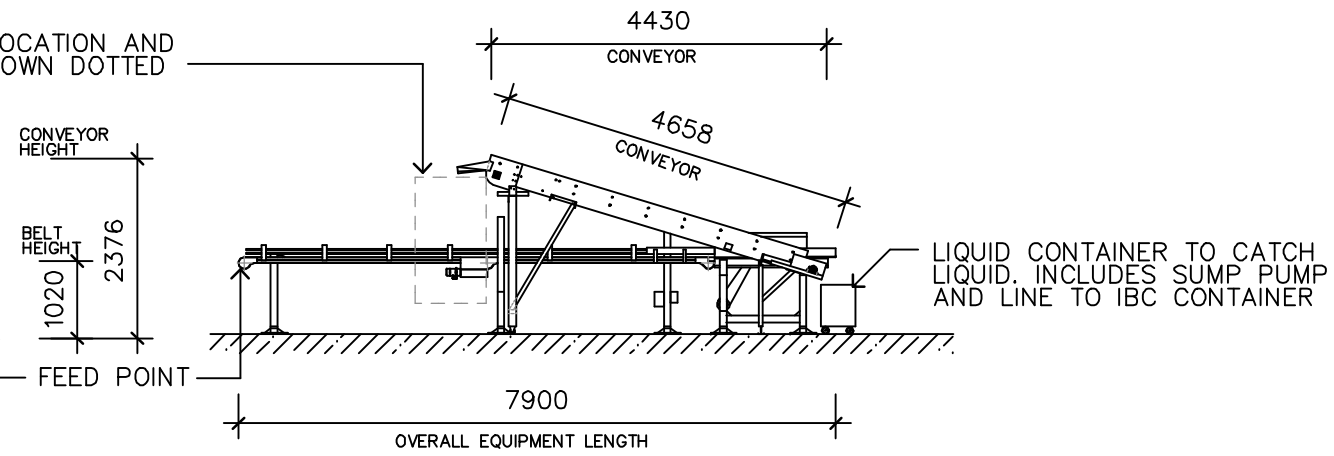

EQUIPMENT ELEVATION (E / A01)
SCALE 1: 100

ISSUE	BY	DESCRIPTION	DATE
A	GR	ISSUE FOR APPROVAL	22-10-20

envirowaste services group pty ltd

COPYRIGHT: THIS DESIGN AND THE ASSOC. DOCUMENTATION IS SUBJECT TO COPYRIGHT LAWS AND MAY NOT BE REPRODUCED IN ANY FORM WITHOUT WRITTEN CONSENT FROM STYLE DEVELOPMENTS

DIAL BEFORE YOU DIG www.1100.com.au

GENERAL NOTES:
1. ALL DIMENSIONS AND FLOOR AREAS ARE TO BE VERIFIED BY THE BUILDER PRIOR TO THE COMMENCEMENT OF ANY BUILDING WORKS. ANY DISCREPANCIES ARE TO BE BROUGHT TO THE ATTENTION OF THE DESIGNER
2. LEVELS SHOWN ARE APPROXIMATE UNLESS ACCOMPANIED BY REDUCED LEVELS FROM A DETAILED SURVEY
3. FIGURED DIMENSIONS MUST BE TAKEN IN PREFERENCE TO SCALING
4. ALL BOUNDARY CLEARANCES MUST BE VERIFIED BY THE SURVEYOR PRIOR TO COMMENCEMENT OF ANY BUILDING WORK
5. WHERE ENGINEERING DRAWINGS ARE REQUIRED SUCH MUST TAKE PRECEDENT OVER THIS DRAWING
6. STORMWATER TO BE DISCHARGED TO COUNCILS'S REQUIREMENTS AND AS 3500.3-2003
7. ALL SERVICES TO BE LOCATED AND VERIFIED BY THE BUILDER WITH RELEVANT AUTHORITIES BEFORE ANY BUILDING WORK COMMENCES
8. ALL WORKS TO BE COMPLETED IN ACCORDANCE WITH THE AUSTRALIAN STANDARDS
9. TERMITE PROTECTION TO BE INSTALLED IN ACCORDANCE WITH AS3660.1-1995 PART 1 NEW BUILDINGS
10. SMOKE ALARMS TO BE INSTALLED BY A LICENSED ELECTRICIAN IN ACCORDANCE WITH THE

STYLE DEVELOPMENTS PTY LTD
2051-2053 THE NORTHERN ROAD
GLENMORE PARK NSW 2745
M: +61 2 419 404 103
E: info@styledevelopments.com.au
W: www.Styledevelopments.com.au
ARCHITECTURAL DESIGN | ENGINEERING
CONSTRUCTION | PROJECT MANAGEMENT

styledevelopments
DESIGN | PROJECT MANAGEMENT | PROPERTY DEVELOPMENT | CONSTRUCTION

PROJECT	EQUIPMENT DETAILS 16 KIORA CRESCENT YENNORA LOT 50 DP18211		PROJECT NO. 2005
CLIENT	ENVIROWASTE SERVICES GROUP		SCALE 1: 100
TITLE	EQUIPMENT ELEVATIONS	JOB NO. 1020/20	SHEET NO. A03 / ISSUE A

A3 SHEET