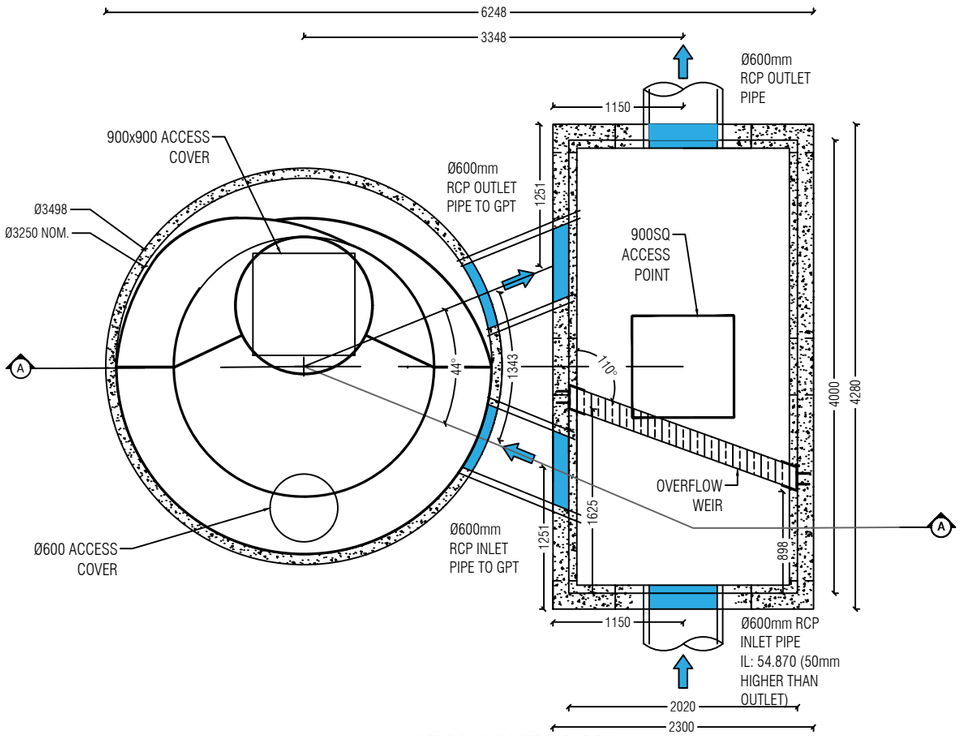

OCEANSAVE PLAN

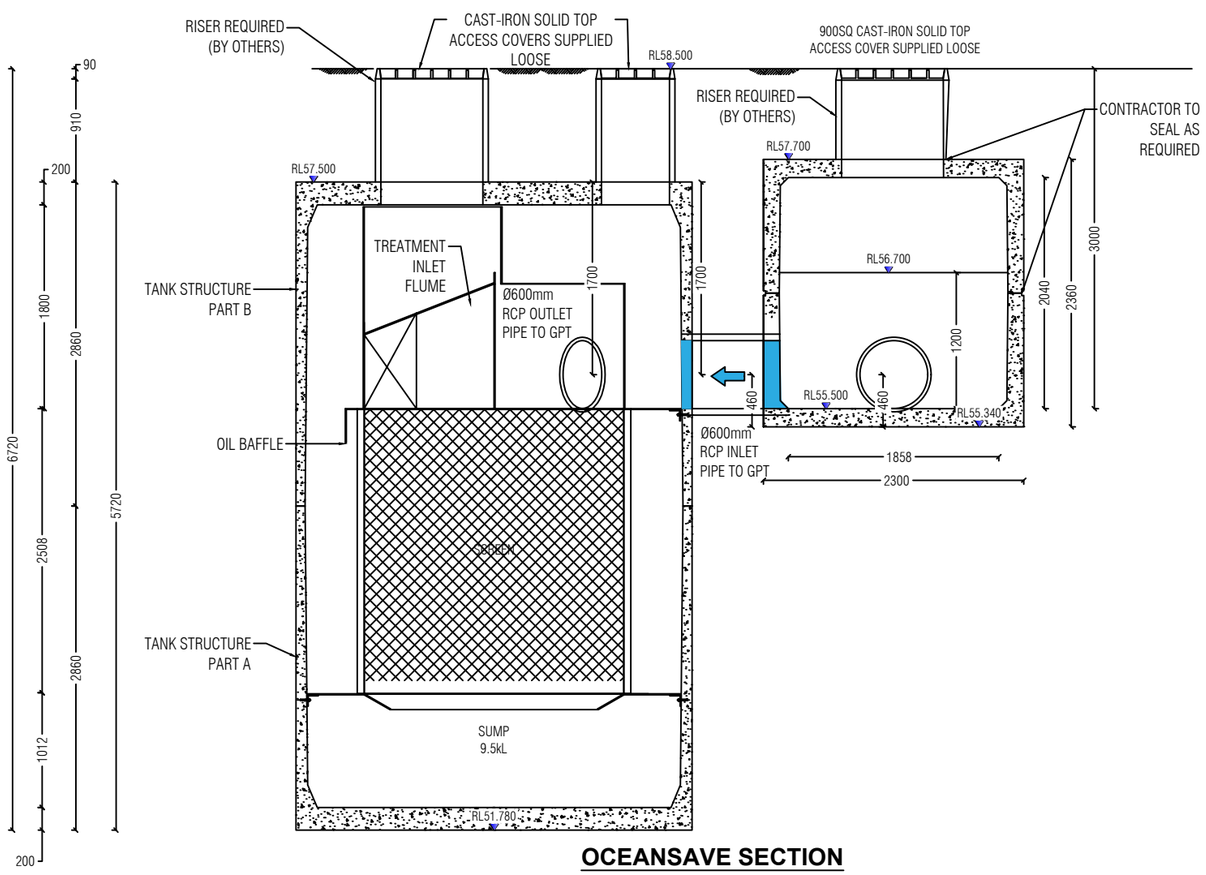

OCEANSAVE SECTION

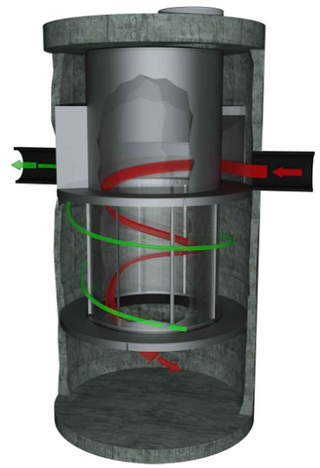

SITE SPECIFIC DATA REQUIREMENTS

PIPE DATA:	I.L.	MATERIAL	DIAMETER
INLET PIPE	SHOWN	SHOWN	SHOWN
OUTLET PIPE	SHOWN	SHOWN	SHOWN
OUTLET PIPE TO OS			

UPPER TANK WEIGHT	TBC
LOWER TANK WEIGHT	TBC
UPPER DIVERSION TANK WEIGHT	TBC
LOWER DIVERSION TANK WEIGHT	TBC

NOTE: TANK SUPPLIED IN TWO PARTS; PARTS A & B TO BE JOINED ON SITE

GENERAL NOTES

1. OCEANSAVE WATER QUALITY STRUCTURE SHALL BE IN ACCORDANCE WITH ALL DESIGN DATA AND INFORMATION CONTAINED IN THIS DRAWING. CONTRACTOR TO CONFIRM STRUCTURE MEETS REQUIREMENTS OF THE PROJECT.
2. INLET AND OUTLET PIPING SHALL BE SPECIFIED BY CERTIFYING ENGINEER. PRECAST STRUCTURE SUPPLIED WITH CORE HOLES TO SUIT OUTER DIAMETER OF NOMINATED PIPE SIZE / MATERIAL.
3. PRECAST STRUCTURE SHALL MEET W80 WHEEL LOAD RATING ASSUMING A MAXIMUM EARTH COVER OF 2.0m AND A GROUND WATER ELEVATION AT, OR BELOW, THE OUTLET PIPE INVERT ELEVATION. ENGINEER TO CONFIRM ACTUAL GROUNDWATER ELEVATION.PRECAST STRUCTURE SHALL BE IN ACCORDANCE WITH AS3600.
4. ALL WATER QUALITY TREATMENT DEVICES REQUIRE PERIODIC MAINTENANCE. REFER TO OPERATION AND MAINTENANCE MANUAL FOR GUIDELINES AND ACCESS REQUIREMENTS.
5. DRAWING NOT TO SCALE.

INSTALLATION NOTES

A. ANY SUB-BASE, BACKFILL DEPTH, AND/OR ANTI-FLOTATION PROVISIONS ARE SITE SPECIFIC DESIGN CONSIDERATION AND SHALL BE SPECIFIED BY THE SITE CIVIL ENGINEER.

B. CONTRACTOR TO PROVIDE ALL EQUIPMENT WITH SUFFICIENT LIFTING AND REACH CAPACITY TO LIFT AND SET THE STRUCTURE (LIFTING DETAIL PROVIDED SEPARATELY).

C. CONTRACTOR TO INSTALL AND LEVEL THE STRUCTURE, APPLY SEALANT TO ALL JOINTS AND TO PROVIDE, INSTALL AND GROUT INLET AND OUTLET PIPES.

D. CONTRACTOR TO TAKE APPROPRIATE MEASURES TO PROTECT SCREEN & SEPARATION CYLINDER COMPONENTS DURING INSTALLATION

PRODUCTION DRAWING SIGN OFF

ALL DETAILS ON THIS PRODUCTION DRAWING HAVE BEEN REVIEWED AND MEET SITE SPECIFIC REQUIREMENTS. UPON RECEIPT OF SIGN-OFF, PRODUCTION WILL COMMENCE IN ACCORDANCE WITH THIS SITE SPECIFIC DRAWING. ALTERATIONS TO THE UNITS DESIGN AFTER RECEIPT OF SIGNED SITE SPECIFIC PRODUCTION DRAWING MAY INCUR ADDITIONAL CHARGES.

APPROVED BY	
SIGNATURE	
DATE	

OCEAN PROTECT
PHONE: 1300 354 722
www.oceanprotect.com.au

14447 - 44 Clunies Ross St, Greystanes

OCEANSAVE OS2324-D - DEVICE 2

SITE SPECIFIC PRODUCTION DRAWING

DRAWING 2 B

DATE: 17-02-2022 | DRAWN:L.C | CHECKED:W.J