ESR HORSLEY LOGISTIC PARK

327-335 BURLEY ROAD, HORSLEY PARK

LOT 204 CIVIL WORKS DRAWINGS FOR SSDA MOD

DRAWING LIST

DRAWING NO.	DRAWING TITLE
CO12990.05-SSDAMOD10	DRAWING LIST & LOCALITY PLAN
CO12990.05-SSDAMOD20	EROSION SEDIMENT CONTROL PLAN
CO12990.05-SSDAMOD25	EROSION SEDIMENT CONTROL PLAN DETAILS
CO12990.05-SSDAMOD30	LOT 204 BULK EARTHWORKS PLAN
CO12990.05-SSDAMOD43	LOT 204 STORMWATER DRAINAGE PLAN
CO12990.05-SSDAMOD45	STORMWATER DRAINAGE DETAILS - SHEET 1
CO12990.05-SSDAMOD46	STORMWATER DRAINAGE DETAILS - SHEET 2
CO12990.05-SSDAMOD47	STORMWATER DRAINAGE DETAILS - SHEET 3
CO12990.05-SSDAMOD53	LOT 204 FINISHED LEVELS PLAN
CO12990.05-SSDAMOD55	RETAINING WALL DETAILS AND TYPICAL SECTIONS

GENERAL NOTES:

1. THESE DRAWINGS SHALL BE READ IN CONJUNCTION WITH ALL ARCHITECTURAL AND OTHER CONSULTANT'S DRAWINGS AND SPECIFICATIONS AND WITH SUCH OTHER WRITTEN INSTRUCTIONS AS MAY BE ISSUED DURING THE COURSE OF THE CONTRACT. ANY DISCREPANCY SHALL BE REFERRED TO THE ENGINEER BEFORE PROCEEDING WITH THE WORK.
2. ALL MATERIALS AND WORKMANSHIP SHALL BE IN ACCORDANCE WITH THE RELEVANT AND CURRENT STANDARDS AUSTRALIA CODES AND WITH THE BY-LAWS AND ORDINANCES OF THE RELEVANT BUILDING AUTHORITIES EXCEPT WHERE VARIED BY THE PROJECT SPECIFICATION.
3. ALL DIMENSIONS SHOWN SHALL BE VERIFIED BY THE BUILDER ON SITE.
   ENGINEER'S DRAWINGS SHALL NOT BE SCALED FOR DIMENSIONS.
   ENGINEER'S DRAWINGS ISSUED IN ANY ELECTRONIC FORMAT MUST NOT BE USED FOR DIMENSIONAL SETOUT.
   REFER TO THE ARCHITECT'S DRAWINGS FOR ALL DIMENSIONAL SETOUT INFORMATION.
4. DURING CONSTRUCTION THE STRUCTURE SHALL BE MAINTAINED IN A STABLE CONDITION AND NO PART SHALL BE OVERSTRESSED. TEMPORARY BRACING SHALL BE PROVIDED BY THE BUILDER TO KEEP THE WORKS AND EXCAVATIONS STABLE AT ALL TIMES.
5. UNLESS NOTED OTHERWISE ALL LEVELS ARE IN METRES AND ALL DIMENSIONS ARE IN MILLIMETRES.
6. ALL WORKS SHALL BE UNDERTAKEN IN ACCORDANCE WITH ACCEPTABLE SAFETY STANDARDS & APPROPRIATE SAFETY SIGNS SHALL BE INSTALLED AT ALL TIMES DURING THE PROGRESS OF THE JOB.

ELECTRONIC INFORMATION NOTES:

1. THE ISSUED DRAWINGS IN HARD COPY OR PDF FORMAT TAKE PRECEDENCE OVER ANY ELECTRONICALLY ISSUED INFORMATION, LAYOUTS OR DESIGN MODELS.
2. THE CONTRACTOR'S DIRECT AMENDMENT OR MANIPULATION OF THE DATA OR INFORMATION THAT MIGHT BE CONTAINED WITHIN AN ENGINEER-SUPPLIED DIGITAL TERRAIN MODEL AND ITS SUBSEQUENT USE TO UNDERTAKE THE WORKS WILL BE SOLELY AT THE DISCRETION OF AND THE RISK OF THE CONTRACTOR.
3. THE CONTRACTOR IS REQUIRED TO HIGHLIGHT ANY DISCREPANCIES BETWEEN THE DIGITAL TERRAIN MODEL AND INFORMATION PROVIDED IN THE CONTRACT AND/OR DRAWINGS AND IS REQUIRED TO SEEK CLARIFICATION FROM THE SUPERINTENDENT.
4. THE ENGINEER WILL NOT BE LIABLE OR RESPONSIBLE FOR THE POSSIBLE ON-GOING NEED TO UPDATE THE DIGITAL TERRAIN MODEL, SHOULD THERE BE ANY AMENDMENTS OR CHANGES TO THE DRAWINGS OR CONTRACT INITIATED BY THE CONTRACTOR.

LOCALITY PLAN
NTS

FOR APPROVAL

AMENDMENTS	DATE	ISSUE
ISSUED FOR APPROVAL	16.11.21	D
ISSUED FOR INFORMATION ONLY	17.09.21	C
ISSUED FOR PRELIMINARY ONLY	03.09.21	B
ISSUED FOR PRELIMINARY ONLY	20.08.21	A

ARCHITECT

CLIENT: ESR

PROJECT: ESR HORSLEY LOGISTICS PARK
LOT 204
327-335 BURLEY ROAD, HORSLEY PARK, 2175

DESIGNED	DRAWN	DATE	CHECKED	SIZE	SCALE	CAD REF:
TF	JB	MAR 19	XC	A0	AS SHOWN	CO12990.05-SSDAMOD10

Costin Roe Consulting Pty Ltd.
Consulting Engineers ACN 003 696 448
Level 1, 8 Windmill Street
Walsh Bay, Sydney NSW 2000
Tel: (02) 9251-7699 Fax: (02) 9241-3721
email: mail@costinroe.com.au

Costin Roe Consulting

PRECISION | COMMUNICATION | ACCOUNTABILITY

DRAWING TITLE: DRAWING LIST & LOCALITY PLAN

DRAWING No: Co12990.05-SSDAMOD10 ISSUE: D

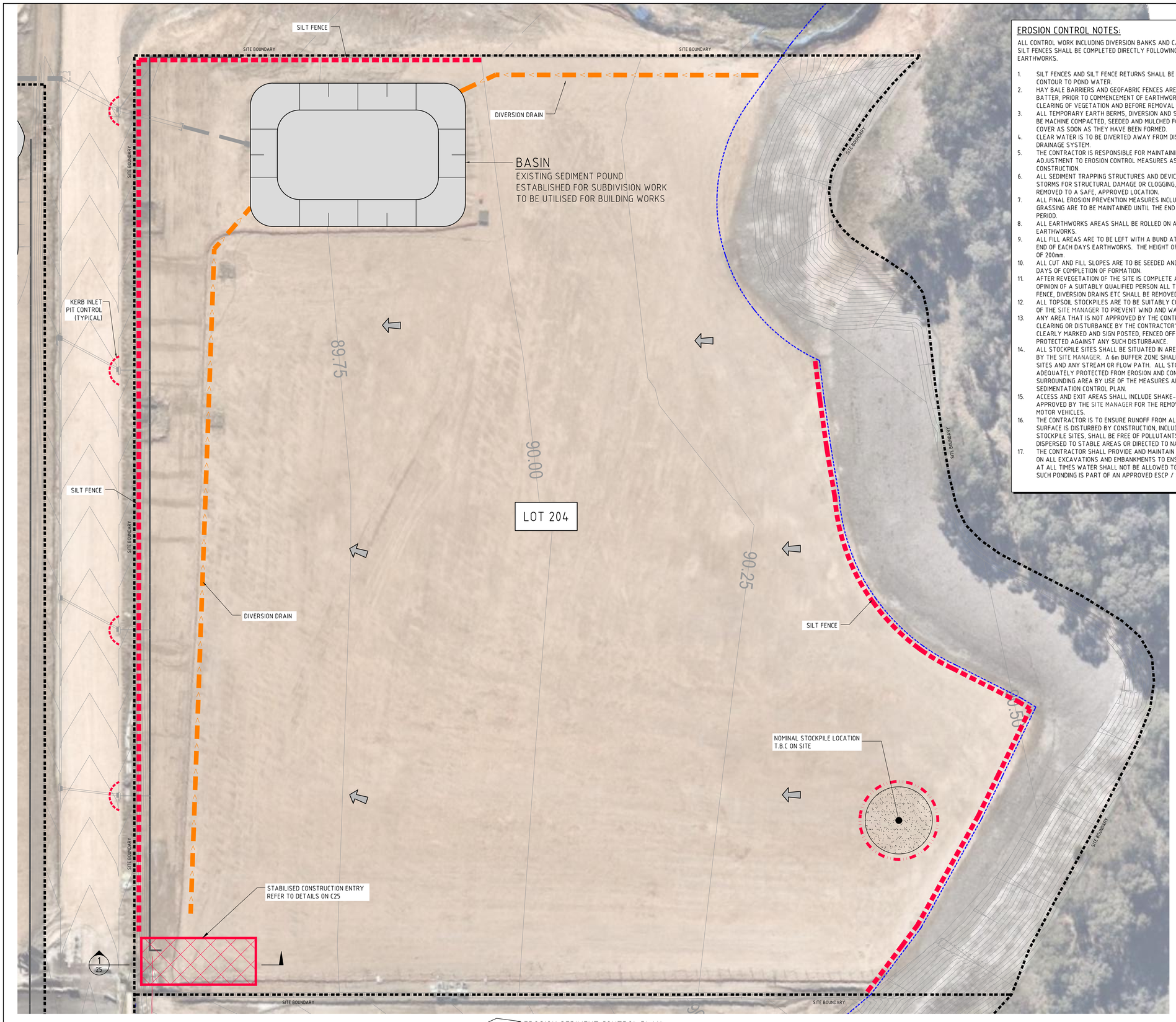

EROSION SEDIMENT CONTROL PLAN
SCALE 1:300

EROSION CONTROL NOTES:

ALL CONTROL WORK INCLUDING DIVERSION BANKS AND CATCH DRAINS, V-DRAINS AND SILT FENCES SHALL BE COMPLETED DIRECTLY FOLLOWING THE COMPLETION OF THE EARTHWORKS.

1. SILT FENCES AND SILT FENCE RETURNS SHALL BE ERECTED CONVEX TO THE CONTOUR TO POND WATER.
2. HAY BALE BARRIERS AND GEOFABRIC FENCES ARE TO BE CONSTRUCTED TO TOE OF BATTER, PRIOR TO COMMENCEMENT OF EARTHWORKS, IMMEDIATELY AFTER CLEARING OF VEGETATION AND BEFORE REMOVAL OF TOP SOIL.
3. ALL TEMPORARY EARTH BERMS, DIVERSION AND SILT DAM EMBANKMENTS ARE TO BE MACHINE COMPACTED, SEEDED AND MULCHED FOR TEMPORARY VEGETATION COVER AS SOON AS THEY HAVE BEEN FORMED.
4. CLEAR WATER IS TO BE DIVERTED AWAY FROM DISTURBED GROUND AND INTO THE DRAINAGE SYSTEM.
5. THE CONTRACTOR IS RESPONSIBLE FOR MAINTAINING AND PROVIDING ON GOING ADJUSTMENT TO EROSION CONTROL MEASURES AS REQUIRED DURING CONSTRUCTION.
6. ALL SEDIMENT TRAPPING STRUCTURES AND DEVICES ARE TO BE INSPECTED AFTER STORMS FOR STRUCTURAL DAMAGE OR CLOGGING, TRAPPED MATERIAL IS TO BE REMOVED TO A SAFE, APPROVED LOCATION.
7. ALL FINAL EROSION PREVENTION MEASURES INCLUDING THE ESTABLISHMENT OF GRASSING ARE TO BE MAINTAINED UNTIL THE END OF THE DEFECTS LIABILITY PERIOD.
8. ALL EARTHWORKS AREAS SHALL BE ROLLED ON A REGULAR BASIS TO SEAL THE EARTHWORKS.
9. ALL FILL AREAS ARE TO BE LEFT WITH A BUND AT THE TOP OF THE SLOPE AT THE END OF EACH DAYS EARTHWORKS. THE HEIGHT OF THE BUND SHALL BE A MINIMUM OF 200mm.
10. ALL CUT AND FILL SLOPES ARE TO BE SEEDED AND HYDROMULCHED WITHIN 10 DAYS OF COMPLETION OF FORMATION.
11. AFTER REVEGETATION OF THE SITE IS COMPLETE AND THE SITE IS STABLE IN THE OPINION OF A SUITABLY QUALIFIED PERSON ALL TEMPORARY WORK SUCH AS SILT FENCE, DIVERSION DRAINS ETC SHALL BE REMOVED.
12. ALL TOPSOIL STOCKPILES ARE TO BE SUITABLY COVERED TO THE SATISFACTION OF THE SITE MANAGER TO PREVENT WIND AND WATER EROSION.
13. ANY AREA THAT IS NOT APPROVED BY THE CONTRACT ADMINISTRATOR FOR CLEARING OR DISTURBANCE BY THE CONTRACTOR'S ACTIVITIES SHALL BE CLEARLY MARKED AND SIGN POSTED, FENCED OFF OR OTHERWISE APPROPRIATELY PROTECTED AGAINST ANY SUCH DISTURBANCE.
14. ALL STOCKPILE SITES SHALL BE SITUATED IN AREAS APPROVED FOR SUCH USE BY THE SITE MANAGER. A 6m BUFFER ZONE SHALL EXIST BETWEEN STOCKPILE SITES AND ANY STREAM OR FLOW PATH. ALL STOCKPILES SHALL BE ADEQUATELY PROTECTED FROM EROSION AND CONTAMINATION OF THE SURROUNDING AREA BY USE OF THE MEASURES APPROVED IN THE EROSION AND SEDIMENTATION CONTROL PLAN.
15. ACCESS AND EXIT AREAS SHALL INCLUDE SHAKE-DOWN OR OTHER METHODS APPROVED BY THE SITE MANAGER FOR THE REMOVAL OF SOIL MATERIALS FORM MOTOR VEHICLES.
16. THE CONTRACTOR IS TO ENSURE RUNOFF FROM ALL AREAS WHERE THE NATURAL SURFACE IS DISTURBED BY CONSTRUCTION, INCLUDING ACCESS ROADS, DEPOT AND STOCKPILE SITES, SHALL BE FREE OF POLLUTANTS BEFORE IT IS EITHER DISPERSED TO STABLE AREAS OR DIRECTED TO NATURAL WATERCOURSES.
17. THE CONTRACTOR SHALL PROVIDE AND MAINTAIN SLOPES, CROWNS AND DRAINS ON ALL EXCAVATIONS AND EMBANKMENTS TO ENSURE SATISFACTORY DRAINAGE AT ALL TIMES WATER SHALL NOT BE ALLOWED TO POND ON THE WORKS UNLESS SUCH PONDING IS PART OF AN APPROVED ESCP / SWMP.

SEDIMENTATION BASIN NOTE:

FOR SEDIMENT & EROSION CONTROL DETAILS REFER TO DRAWING C012990.05-SSDAMOD25.

SEDIMENTATION BASIN SIZING BASED ON RECOMMENDATIONS OF 'SOILS AND CONSTRUCTION, MANAGING URBAN STORMWATER-THE BLUE BOOK'. CAPACITY BASED UPON 5 DAY RAINFALL DEPTH AT 85th PERCENTILE INTENSITY FOR FAIRFIELD (31.5mm).

SEDIMENT BASIN:

CATCHMENT AREA	= 4.03ha
REQUIRED BASIN VOLUME	= 1,270m³
BASE DIMENSION (LxB)	= 20.0m x 36.0m
TOP DIMENSION (LxB)	= 32.0m x 48.0m
MAX SIDE SLOPE	= 1V:3H
DEPTH	= 2.0m
PROVIDED BASIN VOLUME	= 2,205m³

SEDIMENTATION BASINS TO COLLECT RUN-OFF IN EXTREME RAINFALL EVENTS. COLLECTED RUN-OFF TO BE ASSESSED BY A QUALIFIED LABORATORY FOR DOUSING RATES OF ALUM OR GYPSUM TO ENSURE COAGULATION OF SEDIMENTS PRIOR TO WATER BEING DISCHARGED TO COUNCIL STORMWATER SYSTEM.

EACH BASIN IS TO HAVE A MARKER PLACED AS PER THE DETAIL TO INDICATE WHEN SEDIMENT IS TO BE REMOVED. REMOVED SEDIMENT IS TO BE CLASSED AND DEWATERED PRIOR TO REMOVAL FROM SITE.

ALLOWANCE TO BE MADE DURING BENCHING OF SITE TO ENSURE RUN-OFF IS DIRECTED TO SEDIMENTATION BASINS.

NOTES:

1. ASSUME TYPE D SOIL (CLAY/SILTY CLAY)
2. ASSUME GROUP D SOIL (HIGH PLASTICITY AND SHRINK/SWELL PROPERTIES)
3. Cv = 0.5 & LENGTH TO WIDTH RATIO OF 2 (MIN.)

SOIL TYPE TO BE ASSESSED BY A GEOTECHNICAL ENGINEER

POND DEWATERING NOTES:

1. DRAIN PONDS OF WATER & DISCHARGE CLEAN WATER TO STORMWATER DRAINAGE SYSTEM (AS PER NOTES 2 & 3) - REFER TO STORMWATER PLAN FOR LOCATIONS.
2. DEWATERING TO BE PERFORMED IN SUCH A MANNER AS TO REMOVE CLEAN WATER WITHOUT REMOVING OR DISTURBING SILT, SEDIMENT OR OTHER ORGANIC MATERIAL FROM THE BASE OF THE PONDS.
3. DISCHARGE OF WATER FROM PONDS TO HAVE A PH RANGE OF 6.5-8.5 AND TSS < 50mg/L. PONDS TO BE DOSED WITH GYPSUM (APPROX. 30mg PER CUBIC METRE) TO ACCELERATE SETTLEMENT OF SUSPENDED SOLIDS.
4. REMOVE ALL SILT, ORGANIC AND WATER LOGGED MATERIAL FROM BASE OF POND (NOM. DEPTH 0.5-1.0m) AND DISPOSE OF IN ACCORDANCE WITH THE ACCEPTABLE PRACTICE.
5. EXPOSE NATURAL SITE SOILS AND COMPACT SUBGRADE IN ACCORDANCE WITH THE SITE PREPARATION NOTES (REFER DRG. SSDA10) REMOVING ANY SOFT ZONES AS REQ'D.
6. PLACE AND COMPACT FILL AS PER SITE PREPARATION NOTES ON DRAWING SSDA10.
7. INFORMATION PROVIDED ON THIS DRAWING SHALL BE USED TO GUIDE THE DEVELOPMENT OF THE CONSTRUCTION ENVIRONMENTAL MANAGEMENT PLAN THAT SHALL BE IMPLEMENTED DURING CONSTRUCTION

LEGEND:

PROVIDE 1m RETURNS TO SILT FENCE AT 30m MAX. INTERVALS.
TYPICAL (N.S.O.P.)

- DENOTES DIVERSION DRAIN
- DENOTES SILT FENCE WITH CATCH DRAIN
- DENOTES SILT FENCE ONLY
- DENOTES ENVIRONMENTAL ZONE
- DENOTES OVERLAND FLOW PATH
- DENOTES CONSTRUCTION ENTRY

3m 0 5 10 15 20 25 30m
SCALE 1:300 AT A0 SIZE SHEET

FOR APPROVAL

AMENDMENTS	DATE	ISSUE
ISSUED FOR APPROVAL	16.11.21	D
ISSUED FOR INFORMATION ONLY	17.09.21	C
ISSUED FOR PRELIMINARY ONLY	03.09.21	B
ISSUED FOR PRELIMINARY ONLY	20.08.21	A

ARCHITECT

CLIENT: ESR

PROJECT: ESR HORSLEY LOGISTICS PARK
LOT 204
327-335 BURLEY ROAD, HORSLEY PARK, 2175

DESIGNED	DRAWN	DATE	CHECKED	SIZE	SCALE	CAD REF
TF	JB	MAR 19	XC	A0	AS SHOWN	C012990.05-SSDAMOD20

Costin Roe Consulting Pty Ltd.
Consulting Engineers ACN 003 696 448
Level 1, 8 Windmill Street
Walsh Bay, Sydney NSW 2000
Tel: (02) 9251-7699 Fax: (02) 9241-3721
email: mail@costinroe.com.au

Costin Roe Consulting
PRECISION | COMMUNICATION | ACCOUNTABILITY

DRAWING TITLE: EROSION SEDIMENT CONTROL PLAN
DRAWING No: Co12990.05-SSDAMOD20
ISSUE: D

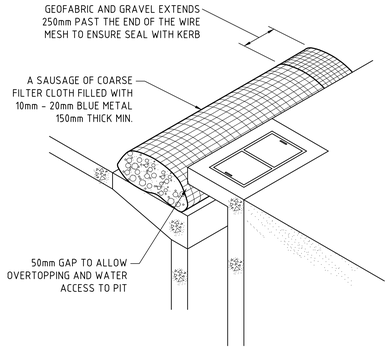

KERB INLET CONTROL

N.T.S

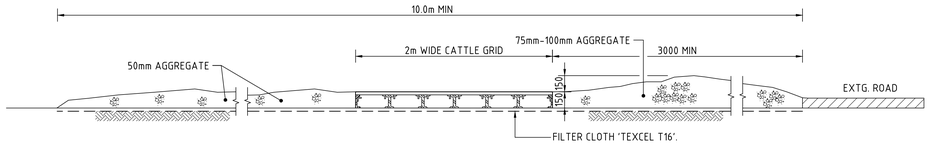

SECTION 1:20 1 - : STABILISED CONSTRUCTION ENTRANCE 'TRUCK SHAKER'

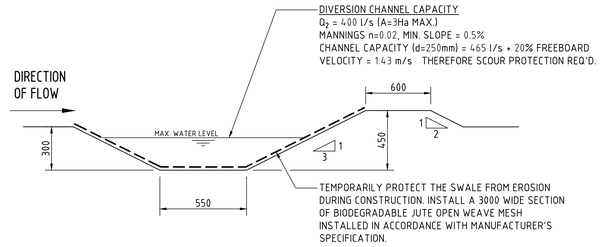

DIVERSION DRAIN SECTION

SCALE 1:20

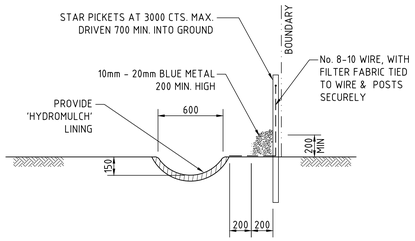

TYPICAL OPEN DRAIN & SILT FENCE

SCALE 1:20

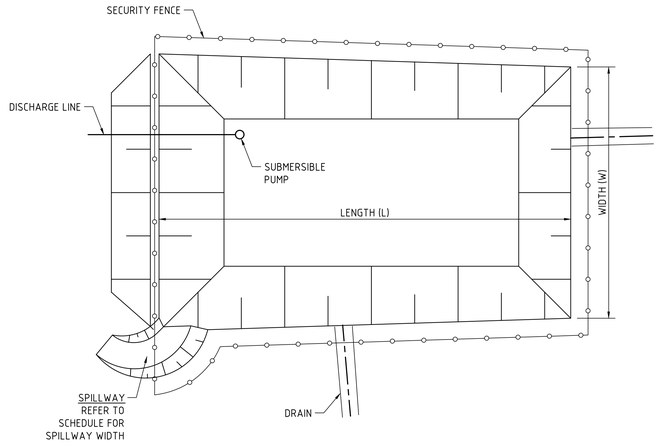

TYPICAL SEDIMENT CONTROL POND PLAN

SCALE 1:250

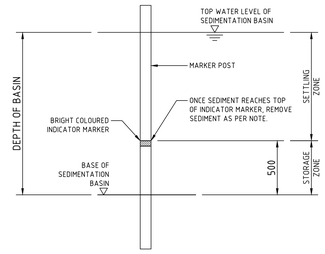

SEDIMENT STORAGE MARKER

SCALE 1:20

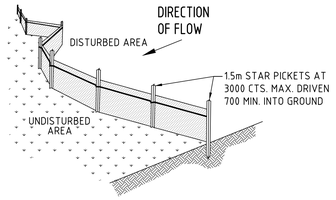

TYPICAL SILT FENCE DETAIL

N.T.S

NOTE: PROVIDE 1m RETURNS AT 30m INTERVALS. TYPICAL

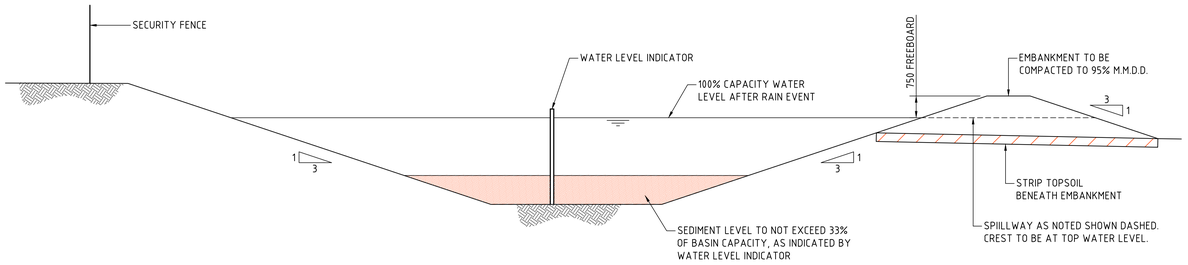

TYPICAL SEDIMENT CONTROL BASIN SECTION

SCALE 1:50

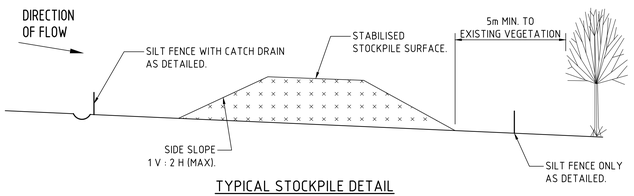

TYPICAL STOCKPILE DETAIL

N.T.S

STOCKPILE NOTES

1. PLACE ALL STOCKPILES IN LOCATIONS MORE THAN 5m FROM EXISTING VEGETATION, ROADS & HAZARD AREAS.
2. CONSTRUCT ON THE CONTOUR AS LOW, FLAT ELONGATED MOUNDS. SIDE SLOPE TO BE 1 V: 2 H MAX.
3. WHERE THERE IS SUFFICIENT AREA, TOPSOIL STOCKPILES SHALL BE LESS THAN 2m IN HEIGHT.
4. WHERE STOCKPILES ARE TO BE IN PLACE FOR MORE THAN 10 DAYS, STABILISE USING WOOD CHIP MULCH - 16 TONNE/Ha.
5. CONSTRUCT SILT FENCE WITH CATCH DRAIN ON UPSLOPE SIDE TO DIVERT WATER AROUND STOCKPILES & SILT FENCE ONLY 1 TO 2m DOWNSLOPE AS SHOWN.

SPILLWAY DETAIL & SCHEDULE

CATCHMENT (Ha)	FLOW (m^3/s)	WIDTH (mm)	FLOW DEPTH (mm)	ROCK SIZE (mm)	BUND HEIGHT ABOVE SPILLWAY (mm)
0.20	0.14	1000	200	-	600
0.5	0.2	2000	200	-	600
1	0.3	2000	200	-	700
2	0.6	4000	200	200	700
5	1.4	5000	300	200	800

2m 0 5 10 15 20 25m
SCALE 1:250 AT A0 SIZE SHEET

500mm 0 1 2 3 4 5m
SCALE 1:50 AT A0 SIZE SHEET

200mm 0 500 1000 1500 2000mm
SCALE 1:20 AT A0 SIZE SHEET

FOR APPROVAL

AMENDMENTS	DATE	ISSUE
ISSUED FOR APPROVAL	16.11.21	D
ISSUED FOR INFORMATION ONLY	17.09.21	C
ISSUED FOR PRELIMINARY ONLY	03.09.21	B
ISSUED FOR PRELIMINARY ONLY	20.08.21	A

ARCHITECT

CLIENT ESR

PROJECT
ESR HORSLEY LOGISTICS PARK
LOT 204
327-335 BURLEY ROAD, HORSLEY PARK, 2175

DESIGNED	DRAWN	DATE	CHECKED	SIZE	SCALE	CAD REF:
TF	JB	MAR 19	XC	A0	AS SHOWN	C012990.05-SSDAMOD25

Costin Roe Consulting Pty Ltd.
Consulting Engineers ACN 003 696 448
Level 1, 8 Windmill Street
Walsh Bay, Sydney NSW 2000
Tel: (02) 9251-7699 Fax: (02) 9241-3721
email: mail@costinroe.com.au ©

Costin Roe Consulting

PRECISION | COMMUNICATION | ACCOUNTABILITY

DRAWING TITLE
EROSION SEDIMENT CONTROL PLAN DETAILS

DRAWING No. Co12990.05-SSDAMOD25 ISSUE D

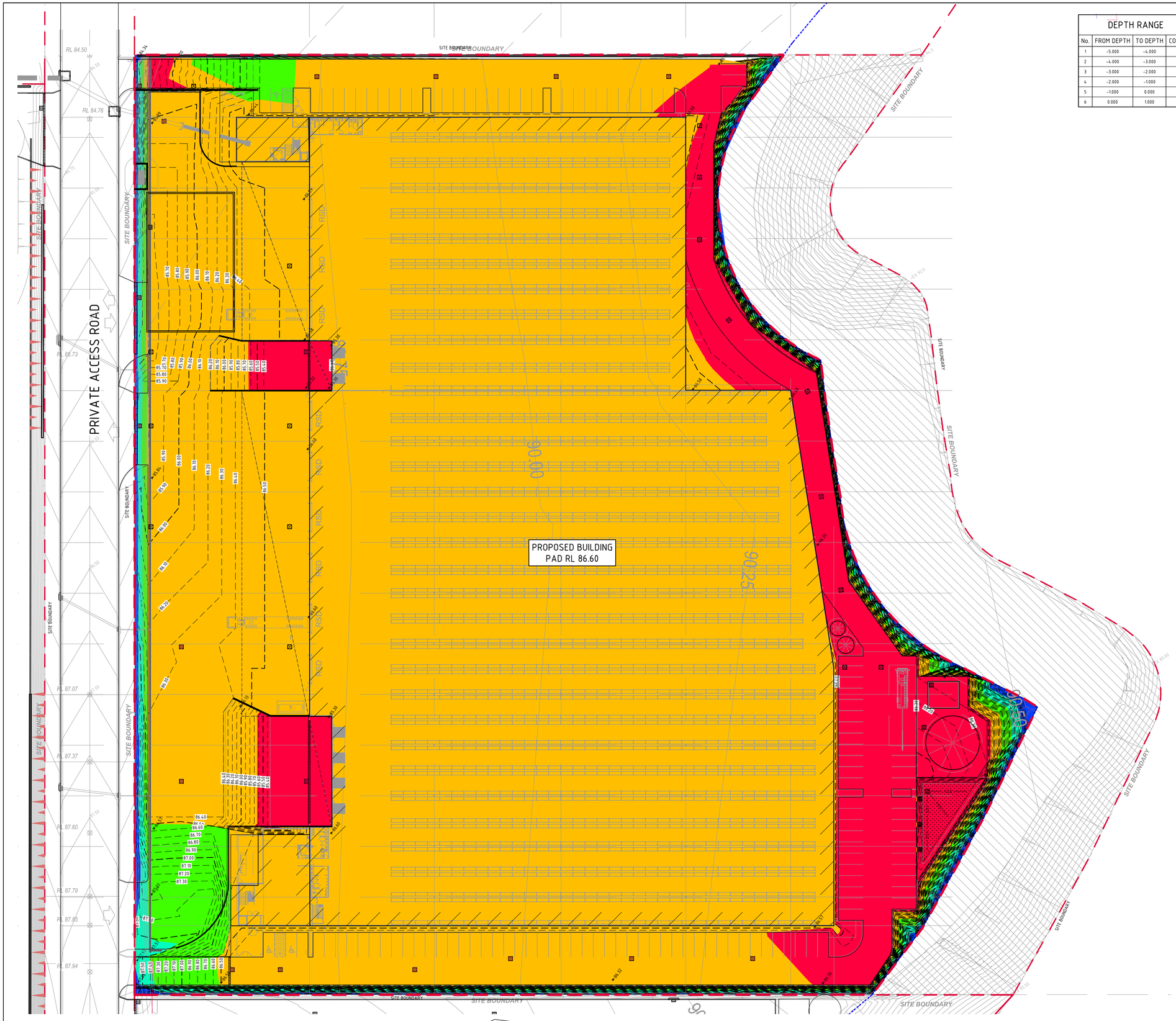

DEPTH RANGE

No.	FROM DEPTH	TO DEPTH	COLOUR
1	-5.000	-4.000	
2	-4.000	-3.000	
3	-3.000	-2.000	
4	-2.000	-1.000	
5	-1.000	0.000	
6	0.000	1.000	

SITE PREPARATION NOTES:

1. ALL EARTHWORKS SHALL BE COMPLETED GENERALLY IN ACCORDANCE WITH THE GUIDELINES SPECIFIED BY THE GEOTECHNICAL REPORT UNDER LEVEL 1 SUPERVISION.
2. EXISTING LEVELS ARE BASED ON INFORMATION PROVIDED BY CALIBRE GROUP TITLED SITE REGRADING PLAN- CSR HORSLEY PARK-STAGE 2A&2B SUBDIVISION DESIGN DATED 24.07.19.
3. STRIP ANY TOP SOIL OR DELETERIOUS MATERIAL AND DISPOSE OF FROM SITE OR STORE AS DIRECTED.
4. COMPLETE CUT TO FILL EARTHWORKS TO ACHIEVE THE REQUIRED LEVELS AS INDICATED ON THE DRAWINGS WITHIN A TOLERANCE OF +0mm/-10mm THROUGH BUILDING PADS/PAVEMENTS AND +0mm/-20mm ELSEWHERE.
5. PREPARE STEEP BATTERS TO RECEIVE FILL BY CONSTRUCTING BENCHING TO FACILITATE FILL PLACEMENT AND COMPACTION.
6. AREAS TO RECEIVE FILL (THAT ARE NOT ON BENCHED BATTERS) AND AREAS IN CUT SHALL BE PROOF ROLLED TO IDENTIFY ANY SOFT HEAVING MATERIAL. SOFT MATERIAL SHALL BE BOXED OUT AND REMOVED PRIOR TO FILL PLACEMENT. PROOF ROLLING TO BE INSPECTED BY A GEOTECHNICAL ENGINEER OR THE EARTHWORKS DESIGNER.
7. SITE WON FILL SHALL BE COMPACTED IN MAXIMUM 300mm LAYERS AND TO DRY OR HILF DENSITY RATIOS (STANDARD COMPACTION) OF BETWEEN 98% AND 103%. THE PLACEMENT MOISTURE VARIATION OR HILF MOISTURE VARIATION SHALL BE CONTROLLED TO BE BETWEEN 2% DRY AND 2% WET.
8. IMPORTED FILL SHALL BE COMPACTED IN MAXIMUM 300mm LAYERS AND TO DRY OR HILF DENSITY RATIOS (STANDARD COMPACTION) OF BETWEEN 98% AND 103%. THE PLACEMENT MOISTURE VARIATION OR HILF MOISTURE VARIATION SHALL BE CONTROLLED TO BE BETWEEN 2% DRY AND 2% WET.
9. ALL ENGINEERED FILL PARTICLES SHALL BE ABLE TO BE INCORPORATED WITHIN A SINGLE LAYER. FURTHER, LESS THAN 30% OF PARTICLES SHALL BE RETAINED ON THE 37.5 mm SIEVE. ENGINEERED FILL SHALL BE ABLE TO BE TESTED IN ACCORDANCE WITH THE STANDARD COMPACTION METHOD (AS1289.5.4.1) OR HILF TEST METHOD (AS1289.5.7.1). THESE METHODS REQUIRE LESS THAN 20% RETAINED ON THE 37.5 mm SIEVE. WHERE BETWEEN 20% AND 30% OF PARTICLES ARE RETAINED ON THE 37.5 mm SIEVE THE ABOVE TEST METHODS SHALL STILL BE ADOPTED AND TEST REPORTS ANNOTATED APPROPRIATELY. THESE REQUIREMENTS SHOULD BE MET BY THE MATERIAL AFTER PLACEMENT AND COMPACTION
10. ALL THE EARTHWORKS UNDERTAKEN AND THE SUBGRADE CONDITION IN THE CUT AREAS (IN THE STATED PERIOD) ARE DOCUMENTED IN THE REPORTS AND HAVE BEEN UNDERTAKEN IN ACCORDANCE WITH THE SPECIFICATION
11. PRIOR TO ANY EARTHWORKS, EROSION CONTROL AS OUTLINED IN THE EROSION AND SEDIMENTATION CONTROL PLAN SHALL BE COMPLETED.
12. EXISTING ROCK, IF ANY, SHALL BE REMOVED BY HEAVY ROCK BREAKING OR RIPPING.
13. MATCH EXISTING LEVELS AT BATTER INTERFACE.
14. CONTRACTOR TO MATCH EXISTING LEVELS AT THE INTERFACE OF EARTHWORKS AND EXISTING SURFACE AT BATTER LOCATIONS OR WHERE NO RETAINING WALLS ARE PRESENT. ANY DISCREPANCY BETWEEN DESIGN AND EXISTING LEVELS TO BE REFERRED TO THE ENGINEER FOR DIRECTION OR ADJUSTMENTS TO DESIGN LEVELS.
15. DURING EARTHWORKS THE CONTRACTOR IS TO ENSURE ALL AREAS ARE FREE DRAINING & WILL NOT RETAIN WATER DURING RAINFALL. PROVIDE TEMPORARY MEASURES AS REQUIRED TO ENSURE FREE FLOWING RUNOFF THROUGH MANAGED DRAINAGE PATHS, DIVERSION DRAINS OR OTHER SUITABLE DISPOSAL METHOD AS AGREED DURING THE WORKS. REFER ANY CONCERNS TO THE ENGINEER. REFER TO EROSION AND SEDIMENT CONTROL DRAWINGS AND NOTES.

LEGEND

LEVELS DATUM IS AHD.

- EXISTING CONTOUR
- B.E.L. CONTOUR (MAJOR 0.5m)
- B.E.L. CONTOUR (MINOR 0.1m)
- MAJOR GRID MARKER (20m)
- MINOR GRID MARKER (10m)
- DENOTES ENVIRONMENTAL ZONE

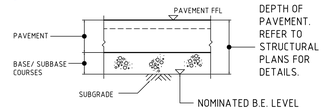

NOMINATED B.E.L. DETAIL
N.T.S.

EARTHWORKS VOLUMES

VOLUMES:

CUT	= - 115,600m³
FILL	= + 0 m³
FUTURE DETAILED EXCAVATION (1250m³/Ha over 3.38Ha)	= - 4,230m³
FUTURE OSD TANK	= -1,160m³
BALANCE	= -120,990m³ (CUT OVER FILL)

EARTHWORKS VOLUMES ARE APPROXIMATE ONLY.
THE VOLUMES ABOVE REPRESENT THE COMPARISON BETWEEN THE DESIGN BULK EARTHWORKS SURFACE AND THE EXISTING PAD ACROSS THE SITE.

EARTHWORKS WITHIN THE PROPOSED SITE AREA ARE BASED ON THE PROPOSED FINISHED FLOOR LEVELS MINUS A PAVEMENT ALLOWANCE OF 300mm UNLESS NOTED OTHERWISE. FINAL DETAILED BULK EARTHWORKS LEVELS ARE TO BE CONFIRMED DURING FUTURE DETAILED DESIGN.

NO ALLOWANCE HAS BEEN MADE IN THE ABOVE VOLUMES FOR EROSION & SEDIMENT CONTROL BACKFILLING, BULKING OR COMPACTION OF FILLED SOILS, THE REMOVAL OF UNCONTROLLED OR CONTAMINATED MATERIAL, TEMPORARY DRAINAGE SWALES WITHIN BUILDING PADS, OR ANY OTHER UNSPECIFIED EXCAVATION RELATED TO FUTURE WAREHOUSE CONSTRUCTION. CONTRACTOR TO MAKE ALLOWANCE FOR FUTURE WAREHOUSE DETAILED EXCAVATION.

LOT 204 BULK EARTHWORKS PLAN
SCALE 1:300

3m 0 5 10 15 20 25 30m
SCALE 1:300 AT A1 SIZE SHEET

FOR APPROVAL

AMENDMENTS	DATE	ISSUE
ISSUED FOR APPROVAL	16.11.21	E
ISSUED FOR INFORMATION ONLY	17.09.21	D
ISSUED FOR PRELIMINARY ONLY	03.09.21	C
ISSUED FOR PRELIMINARY ONLY	28.08.21	B
ISSUED FOR PRELIMINARY ONLY	04.08.21	A

AMENDMENTS DATE ISSUE | AMENDMENTS DATE ISSUE | AMENDMENTS DATE ISSUE

ARCHITECT

CLIENT: ESR

PROJECT: ESR HORSLEY LOGISTICS PARK
LOT 204
327-335 BURLEY ROAD, HORSLEY PARK, 2175

DESIGNED	DRAWN	DATE	CHECKED	SIZE	SCALE	CAD REF:
TF	JB	MAR 19	XC	A0	AS SHOWN	C012990.05-SSDAM00D30

Costin Roe Consulting Pty Ltd.
Consulting Engineers ACN 003 696 448
Level 1, 8 Windmill Street
Walsh Bay, Sydney NSW 2000
Tel: (02) 8251-7699 Fax: (02) 8241-3731
email: mail@costinroe.com.au

Costin Roe Consulting
PRECISION | COMMUNICATION | ACCOUNTABILITY

DRAWING TITLE: LOT 204 BULK EARTHWORKS PLAN

DRAWING No: C012990.05-SSDAM00D30 ISSUE: E

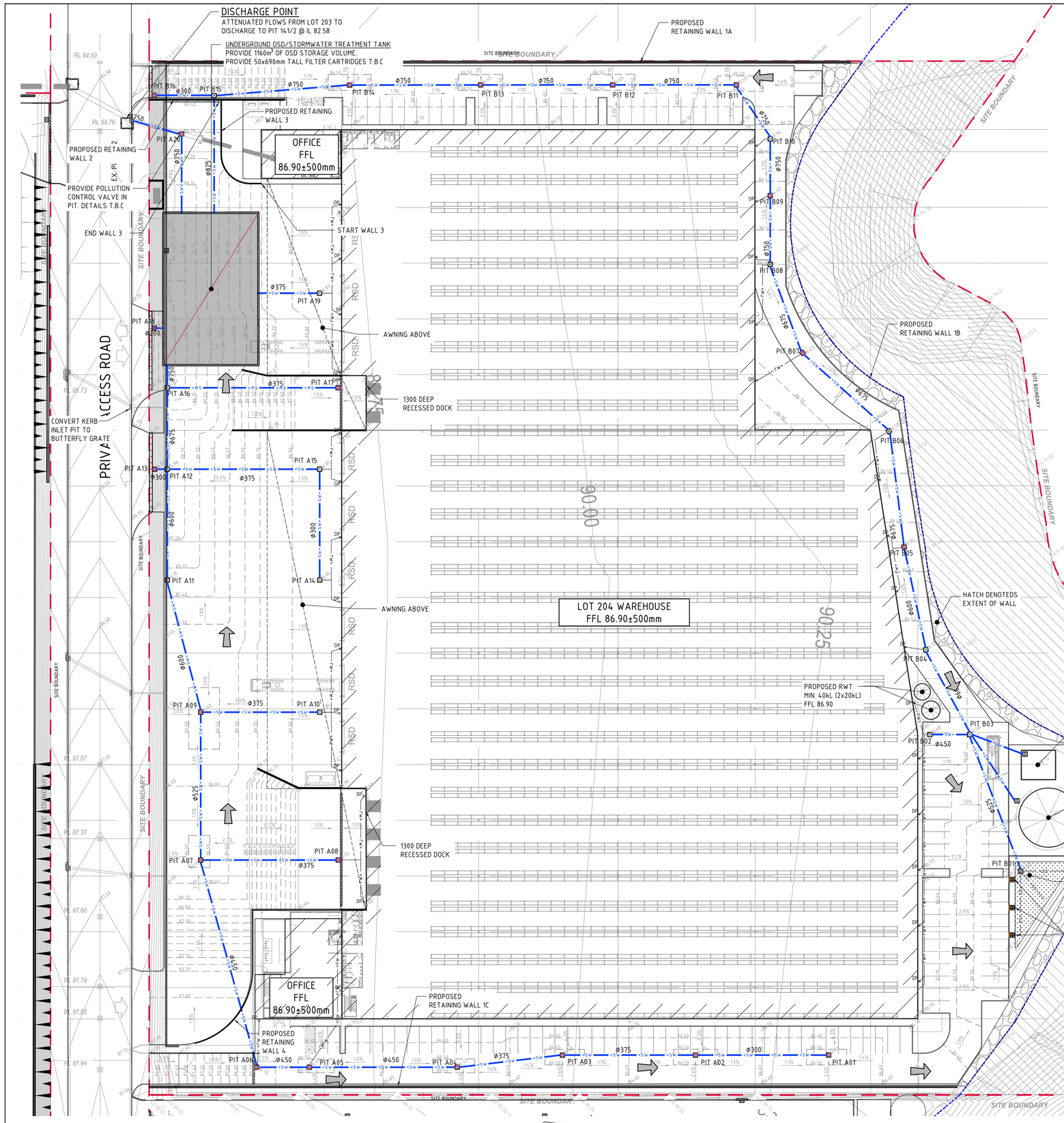

LOT 203 STORMWATER DRAINAGE PLAN
SCALE 1:300

PIT SCHEDULE- NETWORK A				
PIT No.	GRATE RL	TYPE	SIZE	COMMENT
PIT A01	86.45	SGGP	900x900	◇
PIT A02	86.45	SGGP	900x900	◇
PIT A03	86.45	SGGP	900x900	◇
PIT A04	86.45	SGGP	900x900	◇
PIT A05	86.45	SGGP	900x900	◇
PIT A06	86.70	SGGP	900x900	GD ◇
PIT A07	86.45	SGGP	900x900	◇
PIT A08	85.55	SGGP	900x900	GD ◇
PIT A09	86.40	SGGP	900x900	◇
PIT A10	86.85	SJP	900x900	
PIT A11	86.10	SJP	900x900	
PIT A12	85.98	SJP	900x900	◇
PIT A13	86.00	SJP	900x900	GD
PIT A14	86.85	SJP	900x900	
PIT A15	86.85	SGGP	900x900	◇
PIT A16	85.83	SJP	900x900	
PIT A17	85.55	SGGP	900x900	◇
PIT A18	85.60	SGGP	900x900	◇
PIT A19	87.31	SJP	900x900	
PIT A20	86.30	SGGP	900x900	◇

PIT SCHEDULE - NETWORK B				
PIT No.	GRATE RL	TYPE	SIZE	COMMENT
PIT B01	86.00	SGGP	900x900	
PIT B02	86.68	SJP	900x900	
PIT B03	86.58	SJP	900x900	
PIT B04	86.55	SJP	900x900	
PIT B05	86.35	SGGP	900x900	◇
PIT B06	86.58	SJP	900x900	
PIT B07	86.65	SGGP	900x900	◇
PIT B08	86.70	SJP	900x900	
PIT B09	86.65	SGGP	900x900	◇
PIT B10	87.16	SJP	900x900	
PIT B11	86.45	SGGP	900x900	◇
PIT B12	86.45	SGGP	900x900	◇
PIT B13	86.45	SGGP	900x900	◇
PIT B14	86.45	SGGP	900x900	◇
PIT B15	85.33	SJP	900x900	
PIT B16	84.75	SGGP	900x900	GD ◇

NOTE:

ALL SURFACE INLET PITS DENOTED WITH ◇ PITS TO BE FITTED WITH OCEANGUARD OG200 PIT INSERTS.

WATER QUALITY NOTE:

STORMWATER QUALITY REQUIREMENTS HAVE BEEN BASED ON THE STORMWATER CONCEPT PLAN PREPARED BY BROWN CONSULTING.
REF No: X13044.
THE FOLLOWING REDUCTION PARAMETERS HAVE BEEN SET FOR THE PROPOSED DEVELOPMENT:

- GP 90%
- TSS 93%
- TP 74%
- TN 48%

STORMWATER MANAGEMENT NOTE:

STORMWATER MANAGEMENT REQUIREMENTS ARE BASED ON THE STORMWATER CONCEPT PLAN PREPARED BY BROWN CONSULTING.
REF No: X13044

NOTE:

REFER TO DRAWING C012990.05-SSDAMOD10 FOR STORMWATER NOTES.

STORMWATER DRAINAGE NOTES:

1. ALL STORMWATER WORKS TO BE COMPLETED IN ACCORDANCE WITH AUSTRALIAN STANDARD AS3500.3:2018 PLUMBING AND DRAINAGE, PART 3: STORMWATER DRAINAGE.
2. THE MINOR (PIPED) SYSTEM HAS BEEN DESIGNED FOR THE 1 IN 20 YEAR ARI STORM EVENT AND THE MAJOR (OVERLAND) SYSTEM HAS BEEN DESIGNED FOR THE 1 IN 100 YEAR ARI STORM EVENT.
3. ALL FINISHED PAVEMENT LEVELS SHALL BE AS INDICATED ON FINISHED LEVELS PLANS C012990.05-SSDA MOD53.
4. PIT SIZES SHALL BE AS INDICATED IN THE SCHEDULE WHILE PIPE SIZES AND DETAILS ARE PROVIDED ON PLAN.
5. EXISTING STORMWATER PIT LOCATIONS AND INVERT LEVELS TO BE CONFIRMED BY SURVEY PRIOR TO COMMENCING WORKS ON SITE.
6. ALL STORMWATER PIPES Ø375 OR GREATER SHALL BE CLASS 2 (WITH HS2 SUPPORT) REINFORCED CONCRETE WITH RUBBER RING JOINTS UNLESS NOTED OTHERWISE.
7. ALL PIPES UP TO AND INCLUDING Ø300 TO BE uPVC GRADE SN8 UNO.
8. PIPE CLASS NOMINATED ARE FOR IN-SERVICE LOADING CONDITIONS ONLY. CONTRACTOR IS TO MAKE ANY NECESSARY ADJUSTMENTS REQUIRED FOR CONSTRUCTION CONDITIONS.
9. ALL CONCRETE PITS GREATER THAN 1000mm DEEP SHALL BE REINFORCED USING N12-200 EACH WAY CENTERED IN WALL AND BASE. LAP MINIMUM 300mm WHERE REQUIRED. ALL CONCRETE FOR PITS SHALL BE F'c=25 MPa. PRECAST PITS MAY BE USED WITH THE APPROVAL OF THE ENGINEER.
10. IN ADDITION TO ITEM 6 ABOVE, ALL CONCRETE PITS GREATER THAN 3000mm DEEP SHALL HAVE WALLS AND BASE THICKNESS INCREASED TO 200mm.
11. PIPES SHALL BE LAID AS PER PIPE LAYING DETAILS. PARTICULAR CARE SHALL BE TAKEN TO ENSURE THAT THE PIPE IS FULLY AND EVENLY SUPPORTED. RAM AND PACK FILLING AROUND AND UNDER BACK OF PIPES AND PIPE FAUCETS, WITH NARROW EDGED RAMMERS OR OTHER SUITABLE TAMPING DETAILS.
12. CONCRETE PIPES UNDER, OR WITHIN THE ZONE OF INFLUENCE OF PAVED AREAS SHALL BE LAID USING HS2 TYPE SUPPORT, AS A MINIMUM, IN ACCORDANCE WITH AS 3725. AGGREGATE BACKFILL SHALL NOT BE USED FOR PIPE BEDDING AND OR HAUNCH/SIDE SUPPORT.
13. WHERE PIPE LINES ENTER PITS, PROVIDE 2m LENGTH OF STOCKING WRAPPED SLOTTED Ø100 uPVC TO EACH SIDE OF PIPE.
14. ALL SUBSOIL DRAINAGE LINES SHALL BE Ø100 SLOTTED uPVC WITH APPROVED FILTER WRAP LAID IN 300mm WIDE GRANULAR FILTER UNLESS NOTED OTHERWISE. LAY SUBSOIL LINES TO MATCH FALLS OF LAND AND/OR 1 IN 200 MINIMUM. PROVIDE CAPPED CLEANING EYE (RODDING POINT) AT UPSTREAM END OF LINE AND AT 30m MAX. CTS. PROVIDE SUBSOIL LINES TO ALL PAVEMENT/ LANDSCAPED INTERFACES, TO REAR OF RETAINING WALLS (AS NOMINATED BY STRUCTURAL ENGINEER) AND AS SHOWN ON PLAN.
15. ALL PIPE GRADES 1 IN 200 MINIMUM UNO.
16. PROVIDE STEP IRONS IN PITS DEEPER THAN 1000mm.
17. MIN. 600 COVER TO PIPE OBVERT BENEATH ROADS & MIN. 400 COVER BENEATH LANDSCAPED AND PEDESTRIAN AREAS.
18. PIT COVERS IN TRAFFICABLE PAVEMENT SHALL BE CLASS D 'HEAVY DUTY', THOSE LOCATED IN NON-TRAFFICABLE AREAS SHALL BE CLASS B 'MEDIUM DUTY' U.N.O.
19. PROVIDE CLEANING EYES (RODDING POINTS) TO PIPES AT ALL CORNERS AND T-JUNCTIONS WHERE NO PITS ARE PRESENT.
20. DOWN PIPES (DP) TO BE AS PER HYDRAULIC ENGINEERS DETAILS WITH CONNECTOR TO MATCH DP SIZE U.N.O. ON PLAN. PROVIDE CLEANING EYE AT GROUND LEVEL.
21. PIPE LENGTHS NOMINATED ON PLAN OR LONGSECTIONS ARE MEASURED FROM CENTER OF PITS TO THE NEAREST 0.5m AND DO NOT REPRESENT ACTUAL LENGTH. THE CONTRACTOR IS TO ALLOW FOR THIS.
22. WHERE CONNECTION TO EXISTING INGROUND DRAINAGE SYSTEMS, OPEN SWALES, CHANNELS OR ANY OTHER EXISTING SYSTEM, IT IS THE RESPONSIBILITY OF THE CONTRACTOR TO VERIFY THE LOCATION AND INVERT ON SITE AT THE BEGINNING OF THE CONSTRUCTION PERIOD. REFER ANY VARIANCE FROM DOCUMENTATION OR SURVEYS TO THE ENGINEER FOR CLARIFICATION.

LEGEND:

LEVELS DATUM IS AHD.

EXISTING SITE LEVELS AND DETAILS BASED ON SURVEY INFORMATION PROVIDED BY CALIBRE CONSULTING DATED 10.11.17.

- SGGP – SGGP, SINGLE GRATED GULLY PIT
- SJP – SJP, SEALED JUNCTION PIT
- KIP – KIP, KERB INLET PIT
- GD – GD, GRATED DRAIN (300W x 225D UNO)
- SW – PROPOSED DRAINAGE LINE
- EXISTING DRAINAGE LINE
- DP – ROOFWATER DOWNPIPE (INDICATIVE)
- RW – ROOFWATER LINE
- SS – SUBSOIL LINE
- OVERLAND FLOW DIRECTION
- 50.60 – FINISHED PAVEMENT CONTOUR (MAJOR) 0.5m INTERVALS
- 50.10 – FINISHED PAVEMENT CONTOUR (MINOR) 0.1m INTERVALS
- ASSET PROTECTION ZONE BOUNDARY

LEVELS NOTE:

LEVELS SHOWN TO BE ±500mm FROM THOSE SHOWN.
FINAL LEVELS SUBJECT TO FINAL GEOTECHNICAL INVESTIGATIONS, ARCHITECTURAL LAYOUT AND ACHIEVING A CUT TO FILL EARTHWORKS BALANCE OVER THE PROPERTY AND LAND AND ENVIRONMENT COURT ASSESSMENT.

3m 0 5 10 15 20 25 30m
SCALE 1:300 AT A1 SIZE SHEET

FOR APPROVAL

AMENDMENTS	DATE	ISSUE
ISSUED FOR APPROVAL	16.11.21	E
ISSUED FOR INFORMATION ONLY	17.09.21	D
ISSUED FOR PRELIMINARY ONLY	03.09.21	C
ISSUED FOR PRELIMINARY ONLY	20.08.21	B
ISSUED FOR PRELIMINARY ONLY	04.08.21	A

ARCHITECT

CLIENT: ESR

PROJECT: ESR HORSLEY LOGISTICS PARK LOT 204
327-335 BURLEY ROAD, HORSLEY PARK, 2175

DESIGNED	DRAWN	DATE	CHECKED	SIZE	SCALE	CAD REF
TF	JB	MAR 19	XC	A0	AS SHOWN	C012990.05-SSDAMOD43

Costin Roe Consulting Pty Ltd.
Consulting Engineers ACN 003 696 448
Level 1, 8 Windmill Street
Walsh Bay, Sydney NSW 2000
Tel: (02) 9251-7699 Fax: (02) 9241-3721
email: mail@costinroe.com.au

Costin Roe Consulting

PRECISION | COMMUNICATION | ACCOUNTABILITY

DRAWING TITLE: LOT 204 STORMWATER DRAINAGE PLAN

DRAWING No: Co12990.05-SSDAMOD43 ISSUE: E

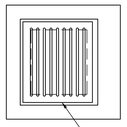

PLAN
SCALE 1:20

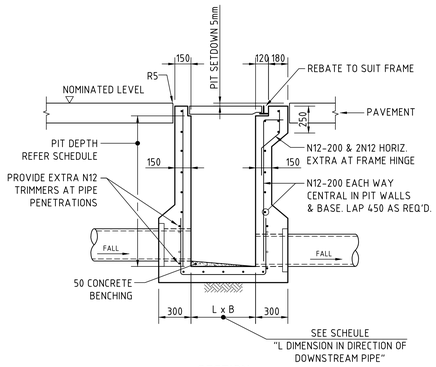

SECTION
SCALE 1:20

SINGLE GRATED GULLY PIT - SGGP

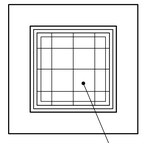

PLAN
SCALE 1:20

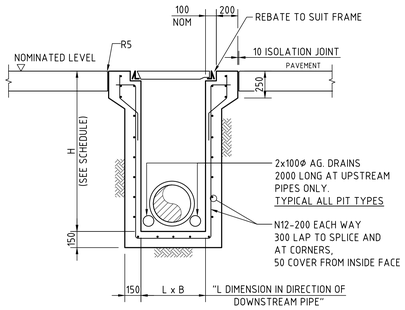

SECTION
SCALE 1:20

SEALED PIT - SP

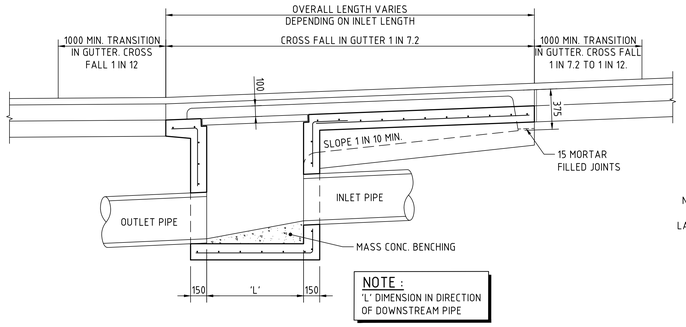

NOTE :
'L' DIMENSION IN DIRECTION
OF DOWNSTREAM PIPE

LONG SECTION
SCALE 1:20

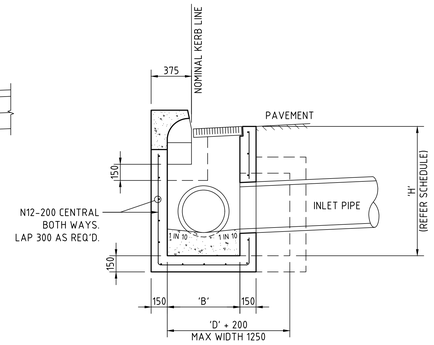

CROSS SECTION
SCALE 1:20

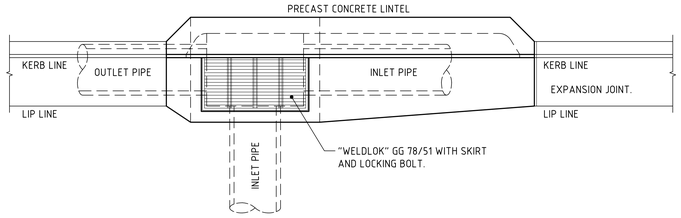

PLAN
SCALE 1:20

KERB INLET PIT - KIP

CONCRETE QUALITY					
ELEMENT	SLUMP	AGGREGATE (MAX. SIZE)	CEMENT TYPE	ADMIXTURE	F'c (MPa)
PIT	80	20	GP	NIL	32

NOTE :

1. WHERE GULLY PIT IS LOCATED ON KERB RETURNS OR BULB OF CUL-DE-SACS PROVIDE CURVED PRECAST CONCRETE LINTELS.
2. SAG PITS SHALL HAVE LINTEL PLACED CENTRALLY ABOUT THE GRATE.
3. ALL REINFORCING TO HAVE 30 MIN. CLAER CONCRETE COVER.
4. FOR PITS DEEPER THAN 1200mm CLIMB RAILS SHALL BE PROVIDED.

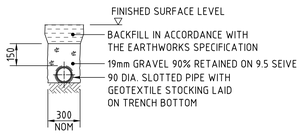

SUPPORT TO AGRICULTURAL DRAIN
SCALE 1:20

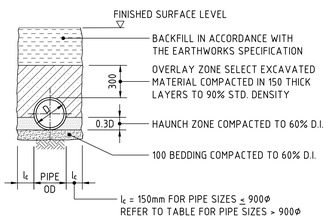

TYPE H1 SUPPORT TO CONCRETE PIPES AT LANDSCAPED AREAS
SCALE 1:20

BEDDING & HAUNCH MATERIAL GRADING	
SIEVE SIZE (mm)	WEIGHT PASSING (%)
19.0	100
2.36	100 TO 50
0.60	90 TO 50
0.30	60 TO 10
0.15	20 TO 0

SIDE ZONE WIDTH	
PIPE SIZE (mm)	l_c (mm)
≤ 900Φ	150
1050Φ	175
1200Φ	200
1350Φ	225
1500Φ	250
1650Φ	275
1800Φ	300
ENGINEER TO SPECIFY TRENCH WIDTHS FOR PIPE SIZES GREATER THAN 1800Φ	

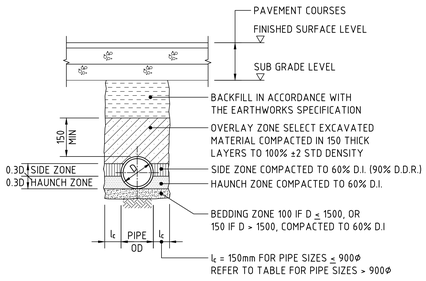

TYPE HS2 SUPPORT TO CONCRETE PIPES UNDER PAVEMENT
SCALE 1:20
D ≤ 1350, MAX FILL = 4.0m
D > 1350, MAX FILL = 3.0m

BEDDING & HAUNCH MATERIAL GRADING	
SIEVE SIZE (mm)	WEIGHT PASSING (%)
19.0	100
2.36	100 TO 50
0.60	90 TO 50
0.30	60 TO 10
0.15	25 TO 0
0.075	10 TO 0

SIDE ZONE WIDTH	
PIPE SIZE (mm)	l_c (mm)
≤ 900Φ	150
1050Φ	175
1200Φ	200
1350Φ	225
1500Φ	250
1650Φ	275
1800Φ	300
ENGINEER TO SPECIFY TRENCH WIDTHS FOR PIPE SIZES GREATER THAN 1800Φ	

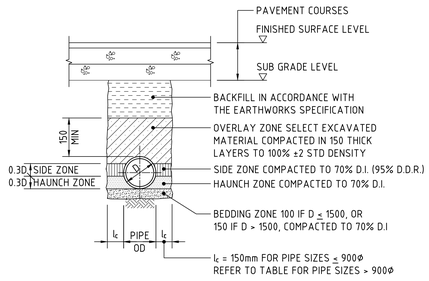

TYPE HS3 SUPPORT TO CONCRETE PIPES UNDER PAVEMENT
SCALE 1:20
D ≤ 1050, MAX FILL = 6.0m
D > 1050, MAX FILL = 4.8m

SIDE ZONE MATERIAL GRADING	
SIEVE SIZE (mm)	WEIGHT PASSING (%)
19.0	100
9.5	100 TO 50
2.6	100 TO 30
0.60	50 TO 15
0.075	25 TO 0
SELECT FILL MATERIAL IN ACCORDANCE WITH TABLE 1 AS 3725	

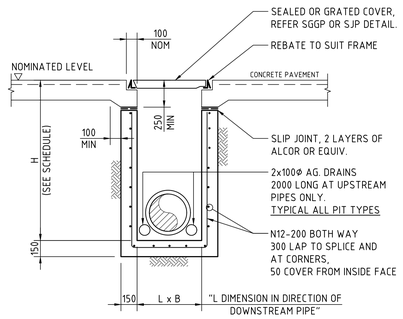

SECTION
SCALE 1:20

SJP/CIS & SGGP/CIS (CAST IN SLAB) PIT DETAIL GRATE/COVER SUPPORT CAST-INTO PAVEMENT SLAB

(ADOPT IN CONCRETE PAVEMENTS FOR SGGP's & SJP's, WHERE JOINTS ARE NOT LOCATED WITHIN PROXIMITY OF THE GRATE)

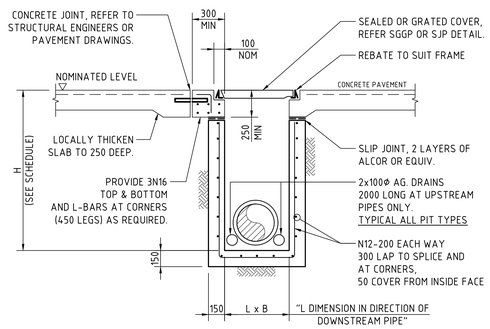

SECTION
SCALE 1:20

SJP/CIS & SGGP/CIS (CAST IN SLAB) PIT DETAIL GRATE/COVER SUPPORT CAST-INTO PAVEMENT SLAB

(ADOPT IN CONCRETE PAVEMENT FOR SGGP's & SJP's, WHERE PITS ARE LOCATED IN THE CORNER OF SLAB PANELS OR ADJACENT TO SLAB PANEL JOINTS)

200mm 0 500 1000 1500 2000mm
SCALE 1:20 AT A0 SIZE SHEET

FOR APPROVAL

AMENDMENTS	DATE	ISSUE
ISSUED FOR APPROVAL	16.11.21	D
ISSUED FOR INFORMATION ONLY	17.09.21	C
ISSUED FOR PRELIMINARY ONLY	03.09.21	B
ISSUED FOR PRELIMINARY ONLY	20.08.21	A

ARCHITECT

CLIENT: ESR

PROJECT: ESR HORSLEY LOGISTICS PARK
LOT 204
327-335 BURLEY ROAD, HORSLEY PARK, 2175

DESIGNED	DRAWN	DATE	CHECKED	SIZE	SCALE	CAD REF:
TF	JB	MAR 19	XC	A0	AS SHOWN	C012990.05-SSDAM0D45

Costin Roe Consulting Pty Ltd.
Consulting Engineers ACN 003 548 642
Level 1, 8 Windmill Street
Walsh Bay, Sydney NSW 2000
Tel: (02) 9251-7699 Fax: (02) 9241-3731
email: mail@costinroe.com.au

Costin Roe Consulting
PRECISION | COMMUNICATION | ACCOUNTABILITY

DRAWING TITLE: STORMWATER DRAINAGE DETAILS SHEET 1

DRAWING No: Co12990.05-SSDAM0D45 ISSUE: D

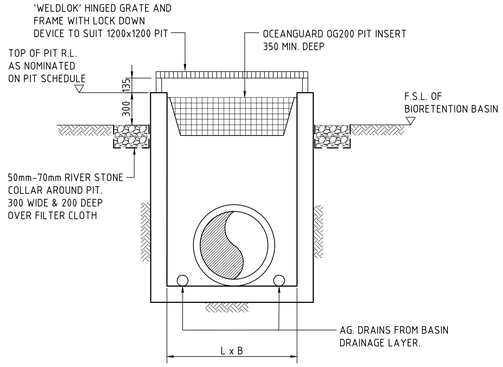

REFER TO TYPICAL SGGP DETAIL FOR PIT DIMENSIONS AND REINFORCEMENT DETAILS

TYPICAL SECTION
SCALE 1:20

BASIN INLET PIT - BIP

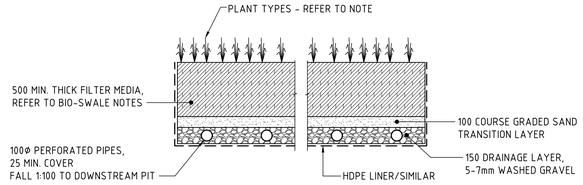

TYPICAL BIO-RETENTION DETAIL
SCALE 1:20

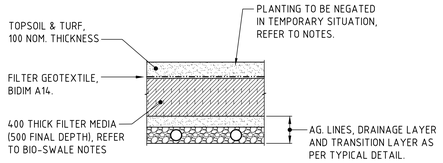

TEMPORARY BIO-RETENTION PROTECTION DETAIL
SCALE 1:20
TEMPORARY CONSTRUCTION REQUIREMENT DETAIL - REFER TO NOTES FOR IMPLEMENTATION PERIODS.

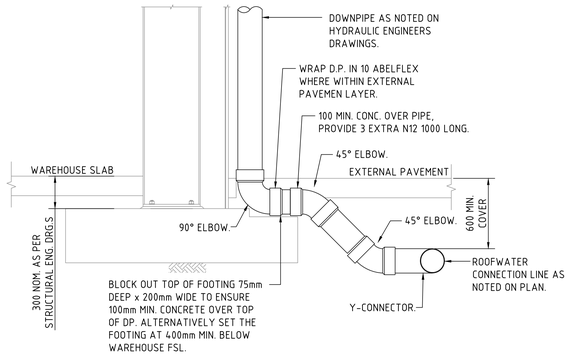

DOWNPIPE TURN-UP DETAIL A
(AT FOOTING LOCATION)
SCALE 1:20

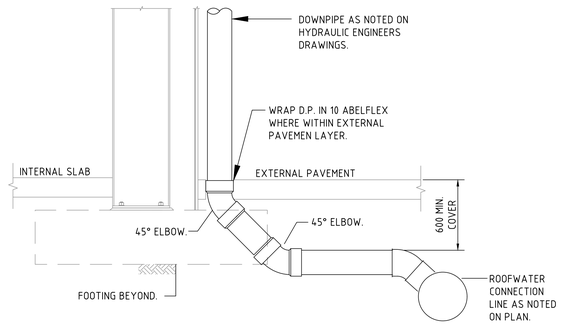

DOWNPIPE TURN-UP DETAIL B
(CLEAR OF FOOTING)
SCALE 1:20

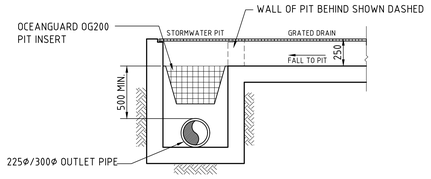

GRATED DRAIN/STORMWATER PIT WITH ENVIROPOD CONFIGURATION
SCALE 1:20

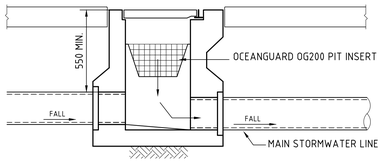

STORMWATER PIT WITH ENVIROPOD CONFIGURATION
SCALE 1:20

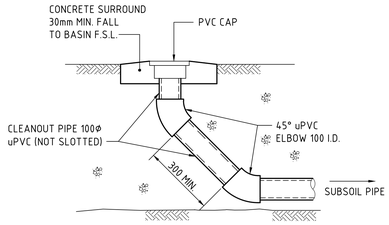

BIORETENTION CLEANOUT EYE ELEVATION
SCALE 1:20
DENOTED C.E. ON PLAN

BIO-RETENTION BASIN DETAILS

BIO-RETENTION NOTES :

FILTER MEDIA TO BE LOAMY SAND WITH A PERMEABILITY NOT LESS THAN 200mm/hr. FILTER MEDIA TO BE FREE OF RUBBISH, DELETERIOUS MATERIAL, TOXICANTS, DECLARED PLANTS AND LOCAL WEEDS, AND IS TO NOT BE HYDROPHOBIC.

FILTER MEDIA TO HAVE THE FOLLOWING COMPOSITION RANGE:

CLAY & SILT (<0.05mm)	<3%
VERY FINE SAND (0.05-0.15mm)	5-30%
FINE SAND (0.15-0.25mm)	10-30%
MEDIUM TO COARSE SAND (0.25-1.00mm)	40-60%
COARSE SAND (1.0-2.0mm)	7-10%
FINE GRAVEL (2.0-3.4mm)	<3%

FILTER MEDIA THAT DOES NOT MEET THE FOLLOWING CRITERIA SHALL BE REJECTED:

a. ORGANIC MATTER CONTENT TO BE IDEALLY WITHIN 1% TO 3% (W/W) AND TO BE NO GREATER THAN 5%(W/W).
b. PH TO BE BETWEEN 5.5 AND 7.5
c. PHOSPHOROUS CONTENT TO BE NO GREATER THAN 35mg/kg

FILTER MEDIA TO BE ASSESSED BY QUALIFIED HORTICULTURALIST TO ENSURE CAPABILITY OF SUPPORTING PLANT LIFE.

DRAINAGE LAYER TO BE CLEAN GRAVEL 5-7mm.

PLANTS TO BE IN ACCORDANCE WITH COUNCIL WSUD HANDBOOK PART 5 - VEGETATION SELECTION GUIDE, WITH A MINIMUM OF SIX DIFFERENT SPECIES.

PROVIDE 100mm TOPSOIL AND TEMPORARY EROSION PROTECTION (JUTEMASTER OR EQUIV) TO SWALE BATTER SLOPES AND ADJACENT LANDSCAPED AREAS. NOTE THAT NO TOPSOIL IS TO BE PLACED OVER FILTRATION MEDIA. PROVIDE SILT FENCE TO TOP OF BANK UNTIL SUCH TIME AS THIS STABILISING AND VEGETATION HAS BEEN COMPLETED.

BIO-RETENTION TO BE PARTIALLY INSTALLED, FOLLOWING COMPLETION OF THE ROAD, WITH THE TOP 75-100mm OF FILTER MEDIA REPLACED WITH A FINE TO COARSE SAND UNDERLAIN WITH A GEOTEXTILE LAYER (REFER TO DETAIL). FOLLOWING COMPLETION OF THE UPSTREAM DEVELOPMENT AND SITE STABILISATION, THE SAND IS TO BE REMOVED, REPLACED WITH FILTER MATERIAL AND PLANTED OUT. REFER TO TEMPORARY BIO-BASIN DETAIL

PRIOR TO PLANTING, THE TOP 100mm OF THE BIORETENTION FILTER MEDIA IS TO BE AMELIORATED WITH APPROPRIATE ORGANIC MATTER, FERTILISER AND TRACE ELEMENTS TO AID PLANT ESTABLISHMENT AS PER THE TABLE BELOW:

TABLE: RECIPE FOR AMELIORATING TOP 100mm OF BIORETENTION FILTER MEDIA

CONSTITUENT	QUANTITY (kg/m2 OF FILTER AREA)
GRANULATED POULTRY MANURE FINES	50
SUPERPHOSPHATE	2
MAGNESIUM SULPHATE	3
POTASSIUM SULPHATE	2
TRACE ELEMENT MIX	1
FERTILISER NPK (16.4.14)	4
LIME	20

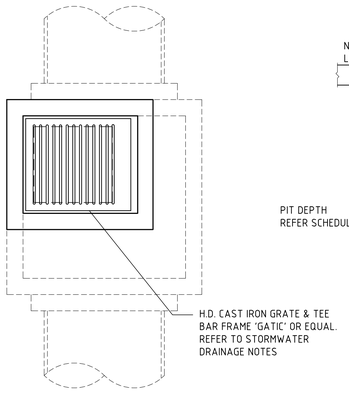

PLAN
SCALE 1:20

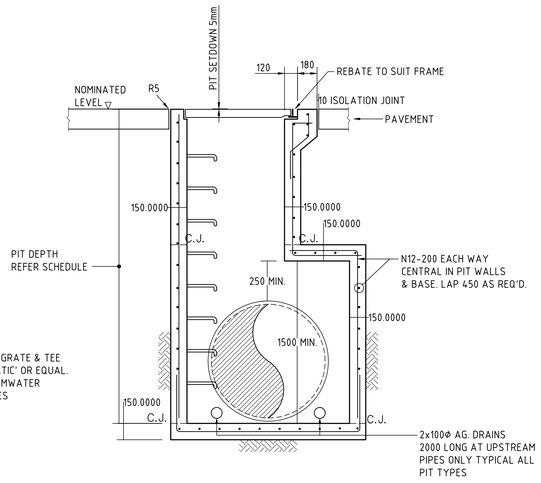

SECTION
SCALE 1:20

TAPERED SINGLE GRATED GULLY PIT - SGGP

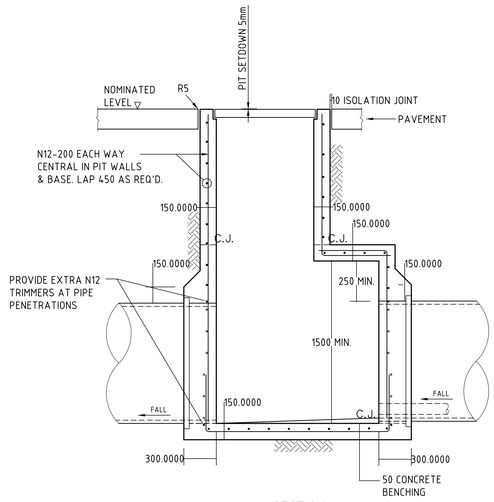

SECTION
SCALE 1:20

TAPERED SINGLE GRATED GULLY PIT - SGGP

200mm 0 500 1000 1500 2000mm
SCALE 1:20 AT A0 SIZE SHEET

FOR APPROVAL

AMENDMENTS	DATE	ISSUE
ISSUED FOR APPROVAL	16.11.21	D
ISSUED FOR INFORMATION ONLY	17.09.21	C
ISSUED FOR PRELIMINARY ONLY	03.09.21	B
ISSUED FOR PRELIMINARY ONLY	20.08.21	A

ARCHITECT

CLIENT: ESR

PROJECT: ESR HORSLEY LOGISTICS PARK LOT 204
327-335 BURLEY ROAD, HORSLEY PARK, 2175

DESIGNED	DRAWN	DATE	CHECKED	SIZE	SCALE	CAD REF:
TF	JB	MAR 19	XC	A0	AS SHOWN	C012990.05-SSDAMOD46

Costin Roe Consulting Pty Ltd.
Consulting Engineers
Level 1, 8 Windmill Street
Walsh Bay, Sydney NSW 2000
Tel: (02) 9251-7699 Fax: (02) 8241-3731
email: mail@costinroe.com.au

Costin Roe Consulting
PRECISION | COMMUNICATION | ACCOUNTABILITY

DRAWING TITLE: STORMWATER DRAINAGE DETAILS SHEET 2

DRAWING No: Co12990.05-SSDAMOD46 ISSUE: D

OSD TANK DETAILS

SITE AREA
TOTAL SITE AREA — 40,295m²

TOTAL SITE AREA DRAINING TO STORAGE (95% IMPERVIOUS) — 33,830m²

STORAGE

VOLUME PROVIDED — 1160m³

INTERNAL TANK DIMENSIONS (INC. HIGH FLOW CHAMBERS)

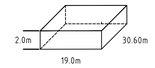

NOTE:
TANK TO BE DESIGNED BY STRUCTURAL ENGINEER

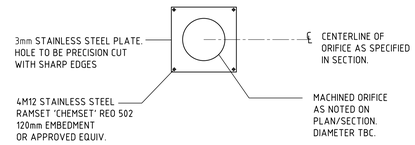

ORIFICE PLATE DETAIL
1:20

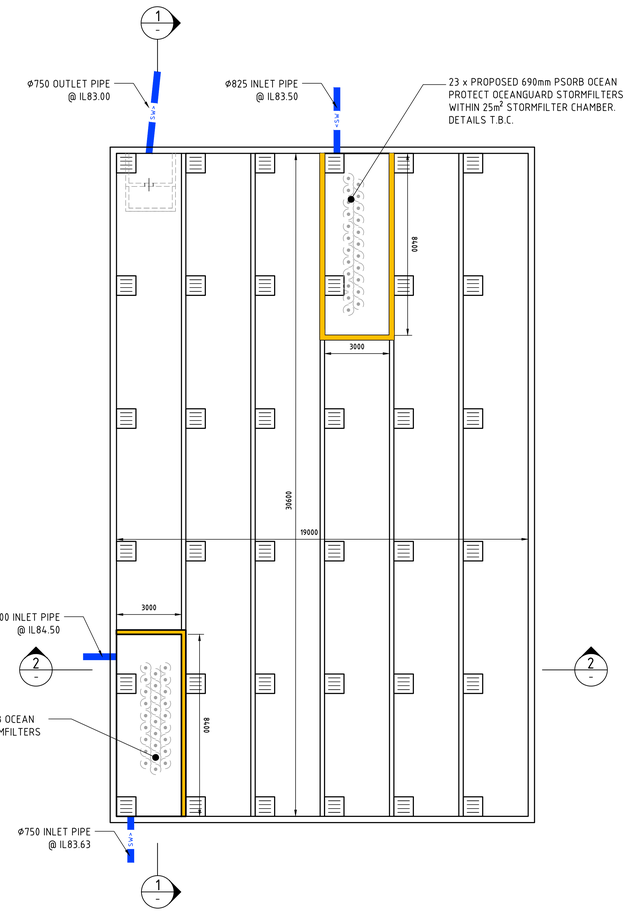

LOT 204 OSD TANK PLAN
1:100

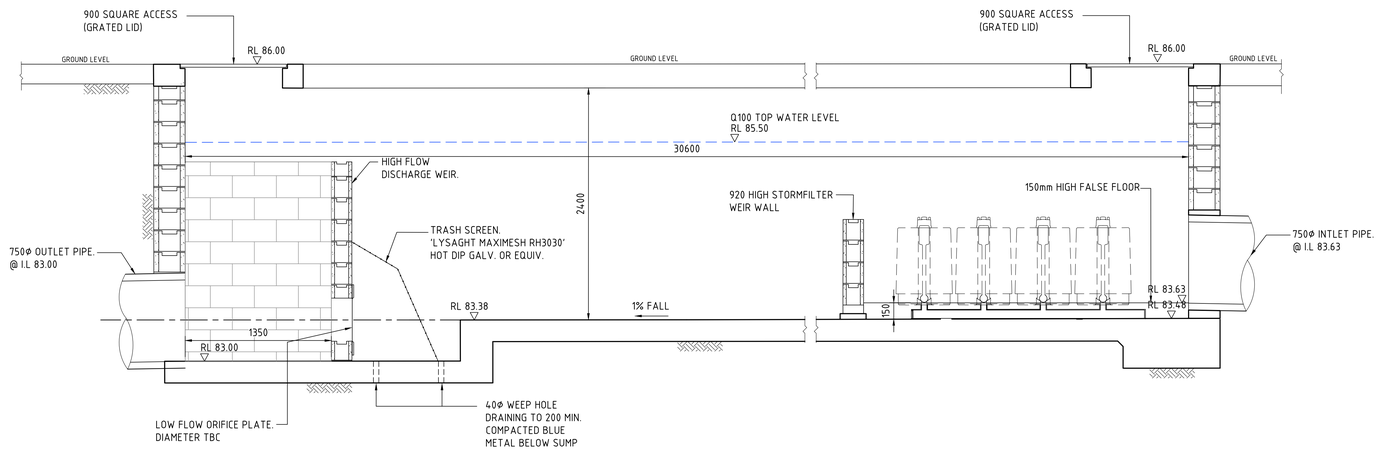

SECTION 1:20 (1) : TYPICAL THRU' TANK

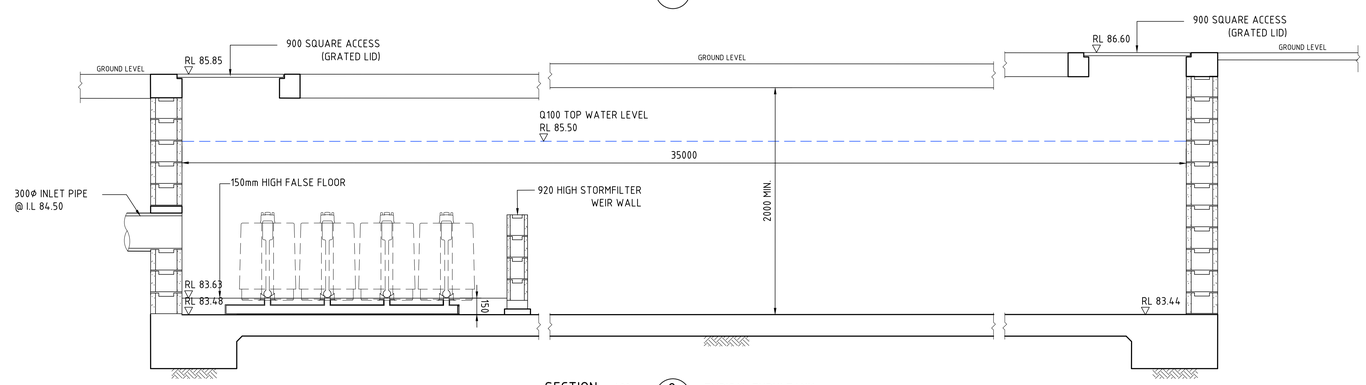

SECTION 1:20 (2) : TYPICAL THRU' TANK

1m 0 1 2 3 4 5 6 7 8 9 10m
SCALE 1:100 AT A0 SIZE SHEET

200mm 0 500 1000 1500 2000mm
SCALE 1:20 AT A0 SIZE SHEET

FOR APPROVAL

AMENDMENTS	DATE	ISSUE
ISSUED FOR APPROVAL	16.11.21	C
ISSUED FOR INFORMATION ONLY	17.09.21	B
ISSUED FOR PRELIMINARY ONLY	03.09.21	A

AMENDMENTS | DATE | ISSUE | AMENDMENTS | DATE | ISSUE

ARCHITECT

CLIENT: ESR

PROJECT: ESR HORSLEY LOGISTICS PARK LOT 204
327-335 BURLEY ROAD, HORSLEY PARK, 2175

DESIGNED	DRAWN	DATE	CHECKED	SIZE	SCALE	CAD REF.
TF	JB	MAR 19	XC	A0	AS SHOWN	Co12990.05-SSDAM0D47

Costin Roe Consulting Pty Ltd.
Consulting Engineers ACN 003 696 448
Level 1, 8 Windmill Street
Walsh Bay, Sydney NSW 2000
Tel: (02) 9251-7699 Fax: (02) 9241-3731
email: mail@costinroe.com.au

Costin Roe Consulting

PRECISION | COMMUNICATION | ACCOUNTABILITY

DRAWING TITLE: STORMWATER DRAINAGE DETAILS SHEET 3

DRAWING No: Co12990.05-SSDAM0D47 ISSUE: C

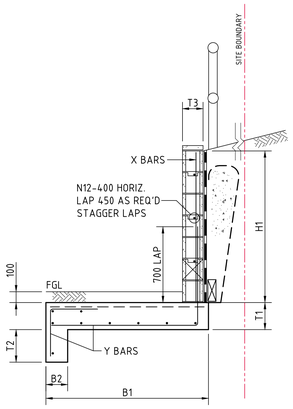

WALL WITH SINGLE STEM OF 190 BLOCK
SCALE 1:20

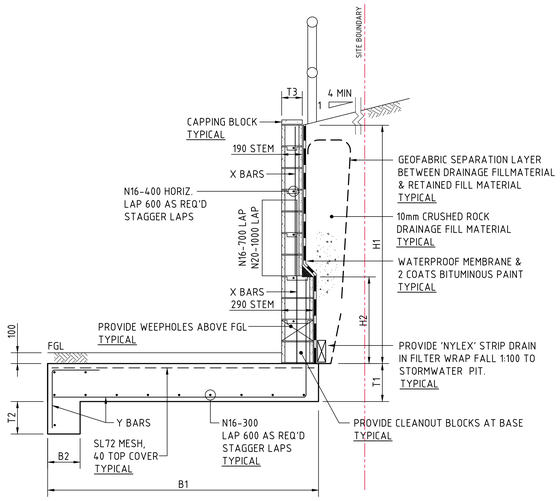

WALL WITH THIN STEM OF 190 BLOCK AND THICK STEM OF 290 BLOCK
SCALE 1:20

CANTILEVER BLOCKWORK RETAINING WALL
SCALE 1:20

RETAINING WALL STRUCTURAL DESIGN TO D+C CONTRACTOR

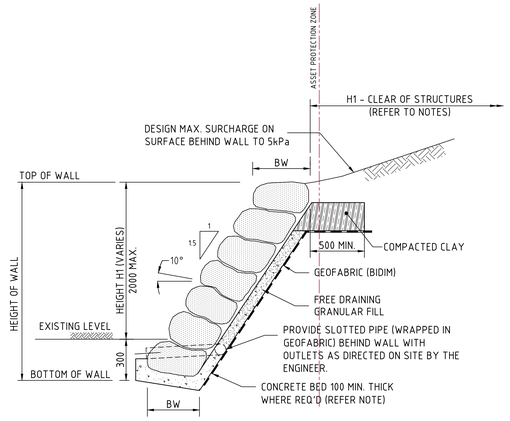

RETAINING WALL
(BOULDER RETAINING WALL)
SCALE 1:20

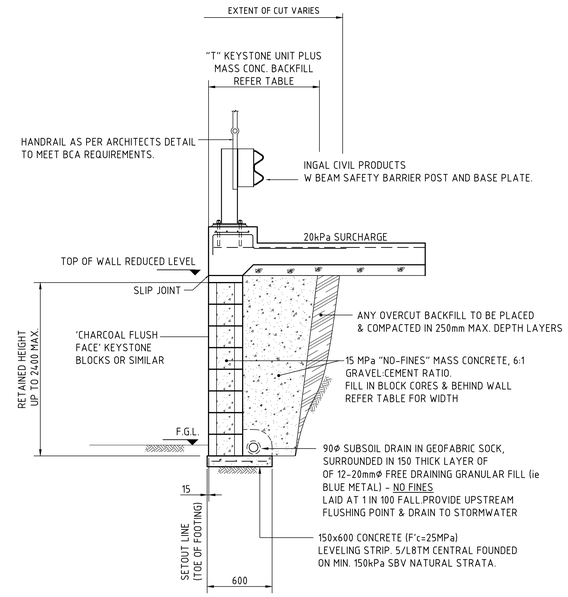

'NO-FINES' MASS CONCRETE KEYSTONE RETAINING WALL
(1000 TO 1800 MAXIMUM RETAINED HEIGHT)
SCALE 1:20

RETAINING WALL NOTES:

1. ALL COMPONENTS AND INSTALLATION SHALL COMPLY WITH AS4678 AND THE STANDARDS REFERRED TO THEREIN.
2. MINIMUM BEARING CAPACITY OF FOUNDATION TO BE AS FOLLOWS :
   a. H MAX. 2.0m = 100 kPa
   b. H MAX. 3.5m = 150 kPa
   c. H MAX. 5.0m = 200 kPa
   BEFORE COMMENCEMENT OF CONSTRUCTION THE FOUNDATION SHALL BE INSPECTED AND VERIFIED BY A QUALIFIED GEOTECHNICAL ENGINEER.
3. WHERE MINIMUM BEARING IS NOT ACHIEVABLE OR NOT MEETING DESIGN REQUIREMENT, THE FOUNDATION MATERIAL IS TO BE EXCAVATED AND REPLACED WITH APPROVED MATERIAL PLACED IN ACCORDANCE WITH THE FILLING SPECIFICATION TO A MINIMUM COMPACTION OF 100% SMDD AND PLACED WITHIN 2% OF OMC.
4. MINIMUM SURCHARGE LOADS TO BE APPLIED AS FOLLOWS U.N.O.
5. ON PLAN :
   a. LIVE LOAD = 20 kPa
   b. DEAD LOAD = 5 kPa
   c. CONSTRUCTION TRAFFIC LIVE LOAD = 10 kPa
6. MINIMUM WALL EMBEDMENT AT THE TOE OF THE WALL TO BE 300mm MINIMUM UNLESS NOTED OTHERWISE.
7. DESIGN LIFE OF STRUCTURE IS TO BE 100 YEARS.
8. TIED WALLS ARE TO BE TEMPORARILY PROPPED AT TOP UNTIL SUCH TIME THE TOP OF WALL IS TIED TO THE SLAB AND 28-DAY CONCRETE STRENGTH HAS BEEN ACHIEVED.
9. CONSTRUCTION EQUIPMENT WEIGHING MORE THAN 500KG STATIC WEIGHT IS TO BE KEPT BACK 1.5m FROM THE REAR FACE OF THE WALL FACING UNITS. COMPACTION OF THE SELECT FILL MATERIAL WITHIN THE 1.5m STRIP ADJACENT TO THE WALL SHALL BE ACHIEVED BY LIGHT MECHANICAL TAMPERS (VIBRATING PLATE, TRENCH COMPACTOR OR SIMILAR) TO GIVE THE SAME DENSITY AS IN THE REMAINDER OF THE SELECT FILL.
10. ALL DESIGN AND CONSTRUCT WALL SYSTEM TO BE COMPLETED IN ACCORDANCE WITH THESE NOTES.
11. WALL ELEVATIONS ALLOW FOR NOMINAL EMBEDMENT DEPTHS. WHERE DESIGN AND CONSTRUCT (D+C) WALL SYSTEMS ARE PROPOSED IT IS THE CONTACTORS RESPONSIBILITY TO ALLOW FOR THE FINAL EMBEDMENT DEPTHS AS PER THE D+C DESIGN. ALLOWANCE FOR OVERALL WALL AREAS TO CONSIDER THE FINAL EMBEDMENT DEPTH.
12. WALL ELEVATIONS AND AREAS ARE BASED ON THE VERTICAL PLAN AREA. CONTRACTOR TO ALLOW ADDITIONAL SURFACE AREA WHERE WALLS ARE NOT VERTICAL OR HAVE BACKSLOPES.

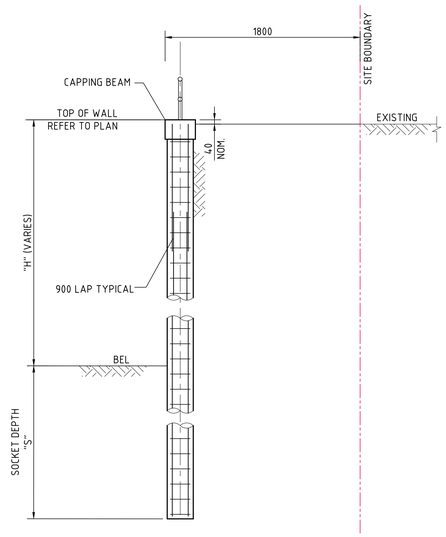

CONTIGUOUS PILE WALL TYPICAL SECTION
SCALE 1:50

NOTE:
SOCKET DEPTH NOTED IS MINIMUM INTO CLASS IV ROCK OR HIGHER. THIS IS TO BE CONFIRMED BY GEOTECHNICAL ENGINEER DURING INSTALLATION. IF SOFTER ROCK IS ENCOUNTERED, ENGINEER TO BE NOTIFIED IMMEDIATELY AND WILL ADVICE OF ADJUSTED SOCKET DEPTH.

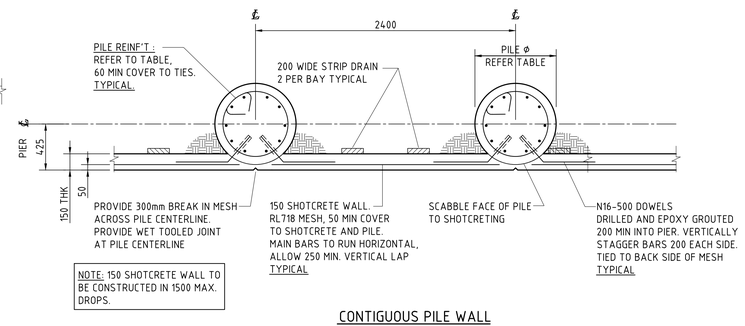

NOTE: 150 SHOTCRETE WALL TO BE CONSTRUCTED IN 1500 MAX. DROPS.

CONTIGUOUS PILE WALL
SCALE 1:20

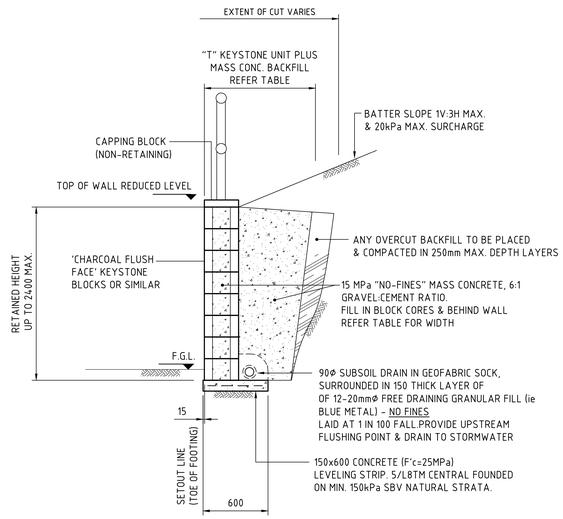

'NO-FINES' MASS CONCRETE KEYSTONE RETAINING WALL
(1000 TO 1800 MAXIMUM RETAINED HEIGHT)
SCALE 1:20

'NO FINES' KEYSTONE WALL DETAILS

KEYSTONE WALL SPECIFICATIONS :

RETAINED HEIGHT (mm)	OVERALLTHICKNESS "T" (mm)
UP TO 1200	TO D&C CONTRACTOR
1200 TO 1600	TO D&C CONTRACTOR
1600 TO 2000	TO D&C CONTRACTOR

NOTE :
INDICATIVE REINFORCEMENT LENGTHS SHOWN. DESIGN TO BE CONFIRMED / PROVIDED BY D+C CONTRACTOR.

KEYSTONE RETAINING WALL NOT BE USED IN TIERED CONFIGURATION.

200mm 0 500 1000 1500 2000mm
SCALE 1:20 AT A0 SIZE SHEET

FOR INFORMATION

AMENDMENTS	DATE	ISSUE
ISSUED FOR APPROVAL	16.11.21	A

ARCHITECT

CLIENT: ESR

PROJECT: ESR HORSLEY LOGISTICS PARK LOT 204
327-335 BURLEY ROAD, HORSLEY PARK, 2175

DESIGNED	DRAWN	DATE	CHECKED	SIZE	SCALE	CAD REF:
TF	JB	MAR 19	XC	A0	AS SHOWN	Co12990.05-SSDAMOD55

Costin Roe Consulting Pty Ltd.
Consulting Engineers ACN 003 548 642
Level 1, 8 Windmill Street
Walsh Bay, Sydney NSW 2000
Tel: (02) 9251-7699 Fax: (02) 9241-3731
email: mail@costinroe.com.au ©

Costin Roe Consulting
PRECISION | COMMUNICATION | ACCOUNTABILITY

DRAWING TITLE: RETAINING WALL DETAILS & TYPICAL SECTIONS

DRAWING No: Co12990.05-SSDAMOD55 ISSUE: A