ENVIRONMENTAL EARTH SCIENCES
CONTAMINATION RESOLVED

REMEDIATION ACTION PLAN PROPOSED LIGHTHORSE INTERCHANGE BUSINESS HUB [SSD 9667]

WESTERN SYDNEY PARKLANDS TRUST

7 APRIL 2020
119104
VERSION 4

ENVIRONMENTAL EARTH SCIENCES
CONTAMINATION RESOLVED

7 April 2020

Western Sydney Parkland Trust
PO Box 3064
Parramatta NSW 2124

Attention: **Luke Wilson**
Project Manager

Remediation Action Plan, Light Horse Interchange Business Hub, Eastern Creek NSW

Please find enclosed a copy of our report entitled as above. We appreciate the opportunity to undertake this work. This Remediation Action Plan (RAP) has been prepared to provide options for the remediation of identified areas of concern (AOC) so that the site can be made suitable for the proposed light industrial use.

The RAP has been prepared based upon the information gathered from contaminated land investigations completed to date and includes an Unexpected Finds Protocol (UFP) to assist in managing any unexpected finds that were not identified previously (if any).

It is recommended that by following the RAP, all identified and unexpected finds can be managed and remediated to ensure that no unacceptable risks to site construction workers, future site employees and future site visitors remains, and that the site is suitable for the proposed development.

Should you have any queries, please do not hesitate to contact us on (02) 9922 1777.

For and on behalf of
Environmental Earth Sciences NSW

Project Manager
Sam Goldsmith
Environmental Scientist

Project Director / Internal Reviewer
Chris Newland
Principal

Internal Reviewer
Mark Stuckey
Senior Principal Scientist and Risk Assessor

119104_RAP_V4

ENVIRONMENTAL EARTH SCIENCES
CONTAMINATION RESOLVED

TABLE OF CONTENTS

1 INTRODUCTION 1

2 STATUTORY OBLIGATIONS 1

2.1 SEARS REQUIREMENTS 1
2.2 GUIDELINES AND INFORMATION 1
2.3 STANDARDS 3
2.4 CODES OF PRACTICE 3

3 BACKGROUND 4

3.1 ZOIC (2017) 4
3.1.1 Investigation 4
3.1.2 Potential areas of concern identified 6
3.2 ENVIRONMENTAL EARTH SCIENCES (2019A) 6
3.2.1 Investigation 6
3.2.2 Findings and results 8
3.2.3 Recommendations 8
3.3 ENVIRONMENTAL EARTH SCIENCES (2019B) 9
3.3.1 Investigation 9
3.3.2 Findings and results 9
3.3.3 Recommendations 10

4 OBJECTIVES 10

4.1 TECHNICAL OBJECTIVE 10
4.2 DATA QUALITY OBJECTIVES 10

5 SITE IDENTIFICATION AND SETTING 12

5.1 LOCATION AND PROPERTY DESCRIPTION 12
5.2 SITE SURROUNDS 13
5.3 PHYSICAL SETTING 13
5.3.1 Topography and drainage 14
5.3.2 Hydrology 14
5.3.3 Regional geology 14
5.3.4 Hydrogeology 14
5.3.5 Salinity 14

6 SITE HISTORY 15

7 REMEDIATION CRITERIA 15

7.1 SOIL INVESTIGATION LEVELS 16
7.1.1 Health investigation levels (HILs) 16

7.1.2 Ecological investigation levels (EILs) 17
7.2 SOIL SCREENING LEVELS 18
7.2.1 Health screening levels (HSLs) 18
7.2.2 Ecological screening levels (ESLs) 18
7.2.3 Management limits for hydrocarbon fractions 19
7.2.4 Asbestos 19

8 CURRENT CONCEPTUAL SITE MODEL 20

8.1 EXTENT OF SOIL CONTAMINATION 20
8.1.1 Chemical contamination 20
8.1.2 Asbestos 21
8.2 CHEMICALS OF CONCERN 22
8.3 POTENTIAL RECEPTORS 22
8.4 EXPOSURE PATHWAYS 23

9 REMEDIATION OPTIONS EVALUATON 23

9.1 REMEDIATION HIERARCHY 23
9.2 OPTIONS EVALUATION AND SELECTION 24
9.2.1 Evaluation components 24
9.2.2 Evaluation and selection process 24

10 REMEDIATION ACTION PLAN 27

10.1 REMEDIATION OF UPSS (AOC-1) 27
10.2 MANAGEMENT OF ACM IN STRUCTURES AND UPON SURFACE SOIL (AOC-1 AND AOC-3) 28
10.3 MANAGEMENT OF ACM IN STOCKPILES (AOC-3 AND AOC-4) 29

11 OFFSITE MATERIAL MANAGEMENT 31

11.1 BENEFICIAL REUSE OPTION 31
11.1.1 Beneficial reuse offsite as VENM 31
11.1.2 Beneficial reuse offsite as ENM 32
11.2 DISPOSAL TO LANDFILL 34
11.2.1 Classification 34
11.2.2 Sampling frequency 35
11.2.3 Criteria 36
11.2.4 Reporting 39

12 VALIDATION METHODOLOGY 39

12.1 SOIL ASSESSMENT 39
12.1.1 Field assessment 39
12.1.2 Sampling 40
12.2 VALIDATION RATIONALE 40

12.2.1 Walls of UST pit excavation 40
12.2.2 Base of UST pit excavation 40
12.2.3 Confirmatory UST pit wall assessment 41
12.2.4 Stockpiles 41
12.3 ASBESTOS 41

13 ASBESTOS MANAGEMENT PLAN 41

13.1 MANAGEMENT AND CONTROL OF ASBESTOS RISK 42
13.2 ESTABLISHMENT OF EXCLUSION ZONE 42
13.3 PPE MEASURES AND DETERMINATION 43
13.4 INVENTORY OF PPE 44
13.5 STRUCTURE AND RESPONSIBILITY 45
13.5.1 Construction project manager 45
13.5.2 Licensed asbestos removalist (LAR) 45
13.5.3 Licensed Asbestos Assessor (LAA) / competent person 46
13.6 ASBESTOS REMOVAL 46
13.6.1 General 46
13.6.2 Licensed asbestos removalist 47
13.6.3 Safe Work Method Statement 48
13.6.4 Asbestos Removal Control Plan (ARCP) 48
13.6.5 Clearance inspection 49
13.6.6 Clearance report 49
13.7 NOTIFICATIONS FOR ANY ASBESTOS REMOVAL WORK 49
13.8 PLANT AND MACHINERY 50
13.9 AIRBORNE FIBRE MONITORING 50
13.10 DECONTAMINATION PROCEDURES 51
13.10.1 Cleaning 51
13.10.2 Disposal of PPE 51
13.10.3 Vehicle decontamination 52
13.10.4 General waste disposal 52
13.10.5 AF / FA Waste Disposal 52
13.11 REPORTING REQUIREMENTS 53
13.12 ENVIRONMENTAL TRAINING 53
13.13 EMERGENCY CONTACTS & RESPONSE 53
13.14 INCIDENT REPORTING 53
13.15 REVIEW, CORRECTIVE ACTION & CONTINUAL IMPROVEMENT 54

14 ENVIRONMENTAL CONTROLS 54

14.1 DRAINAGE CONTROL 54
14.2 DEWATERING CONTROL 57
14.3 EROSION AND SEDIMENT CONTROL 59

14.4 DUST CONTROL 61
14.5 ABORIGINAL HERITAGE MANAGEMENT 62

15 SALINITY 63

16 UNEXPECTED FINDS PROTOCOL (UFP) 65

17 UNEXPLODED ORDINANCE 66

18 QUALITY ASSURANCE AND QUALITY CONTROL 68

18.1 MEASUREMENT DATA QUALITY OBJECTIVES 68
18.2 MEASUREMENT DATA QUALITY INDICATORS 69
18.2.1 Repeatability (Field collected intra-and inter-laboratory duplicates) 69
18.2.2 Precision 70
18.2.3 Accuracy 70
18.2.4 Representativeness 71
18.2.5 Completeness 71
18.2.6 Comparability 71
18.2.7 Sensitivity 74
18.2.8 Blanks 74
18.2.9 Holding times 74
18.2.10 Procedures for anomalous samples and confirmation checking 74

19 DELIVERABLES 75

19.1 CONSTRUCTION ENVIRONMENTAL MANAGEMENT PLAN (CEMP) 75
19.2 MATERIAL CERTIFICATION ADVICE 75
19.2.1 Waste classification 75
19.2.2 Natural material certification 76
19.3 VALIDATION REPORT 76

20 LIMITATIONS 77

21 REFERENCES 77

22 GLOSSARY OF TERMS 80

Table of Figures

Figure 1: Site Locality Map
Figure 2: Site Layout and Features
Figure 3a: Area A – Investigation Locations
Figure 3b: Area B – Investigation Locations
Figure 4: Soil Exceedances and Areas of Concern

Tables

Table 1: Potential areas of concern (Zoic, 2017)
Table 2: Data Quality Objectives
Table 3: Site identification
Table 4: Health investigation levels for soil contaminants
Table 5: Site specific EILS
Table 6: Management limits, ESLs, and HSLs (mg/kg dry soil)
Table 7: Health screening levels for asbestos in soil
Table 8: Summary of exceedances
Table 9: Summary of asbestos detections within development boundary
Table 10: Options evaluation and screening matrix
Table 11: ENM sampling for stockpiled material
Table 12: ENM sampling for in situ material
Table 13: ENM chemical and material requirements
Table 14: Sample frequency for chemical characterisation
Table 15: Waste disposal criteria without TCLP – Contaminant Threshold
Table 16: Waste disposal criteria with TCLP
Table 17: PPE Minimum requirements
Table 18: Airborne Asbestos fibre management
Table 19: Drainage control plan
Table 20: Dewatering control plan
Table 21: Erosion and sediment control plan
Table 22: Dust control plan
Table 23: Measurement data quality indicators (MDQIS)
Table 24: Analytical methods and holding times

Appendices

APPENDIX A: Results Summary Tables
APPENDIX B: Historical Bore and Material Logs
APPENDIX C: Development Design Drawings
APPENDIX D: VENM Certificate Form
APPENDIX E: SSROC Fact Sheets
APPENDIX F: UFP Proforma
APPENDIX G: UXO Information

1 INTRODUCTION

Environmental Earth Sciences NSW was commissioned by Western Sydney Parklands Trust (the "Trust") to prepare a Stage 3 remediation action plan (RAP) to manage known and potentially unforeseen contamination at the proposed Light Horse Interchange Business Hub, junction of motorways No.4 and No.7, Eastern Creek, NSW (the "site"). The site comprises the development boundary which is formally identified by the following property identifiers:

- Part of Lot 10 in Deposited Plan (DP) 1061237; and
- Part of Lot 5 in DP 804051.

This Stage 3 RAP has been prepared in accordance with requirements on NSW Office of Environment and Heritage (OEH) (2011) – *Guidelines for Consultants Reporting on Contaminated Sites*. This plan should also be read in conjunction with the limitations (**Section 20**) and General and Specific Limitations included at the rear of this document. Refer to **Figure 1**: for site locality details, and **Figure 2**: for development boundary details.

2 STATUTORY OBLIGATIONS

2.1 SEARS requirements

Contamination management at the site is being undertaken to address the following key issues in accordance with State Significant Development (SSD) – Planning Secretary's Environmental Assessment Requirements (SEARs) (SSD9667):

- A detailed assessment of the extent and nature of any contamination of the soil, groundwater and soil vapour.
- An assessment of potential risks to human health and environmental receptors in the vicinity of the site.
- A description and appraisal of any mitigation and monitoring measures, and consideration of whether the site is suitable for the proposed development.

Contamination investigations undertaken thus far inform that remediation works must take place to render the suite suitable for proposed use. Both contamination investigation findings and RAP requirements will inform the overarching environmental impact statement (EIS) for the site to a standard suitable for inclusion in the State Significant Development (SSD) Application.

2.2 Guidelines and information

This Stage 3 RAP has been prepared with reference to the NSW OEH (2011) guideline requirements and details site characteristics, the location of the areas requiring remediation, remedial strategy and works undertaken, prescribed validation process and data quality assessment. The following other guidance or requirements have been referred to:

- Australian & New Zealand Environment & Conservation Council / Agriculture & Resource Management Council of Australia & New Zealand (2000) — Australian and New Zealand guidelines for fresh and marine water quality. National Water Quality Management Strategy (ANZECC & ARMCANZ, 2000).
- Australian and New Zealand Governments (ANZG) (2018) — Australian and New Zealand Guidelines for Fresh and Marine Water Quality.
- Cooperative Research Centre for Contamination Assessment and Remediation of the Environment (2017) – Technical Report No.39, Risk-based Management and Remediation Guidance for Benzo(a)pyrene (CRC Care, 2017).
- National Environment Protection Council (NEPC) (1999) — National Environment Protection (Assessment of Site Contamination) Amendment Measure 2013 (ASC NEPM, 2013).
- NEPC (1988) - National Environmental Protection (Ambient Air Quality) Measure.
- National Health and Medical Research Council and Natural Resource Management Ministerial Council (2011) — Australian drinking water guidelines, National Water Quality Management Strategy (NHMRC/ NRMMC, 2011).
- NSW Department of Environment and Conservation (DEC) (2007) — Guidelines for the assessment and management of groundwater contamination.
- NSW Department of Environment Climate Change and Water (DECCW) (2009) — Guidelines for Implementing the POEO (Underground Petroleum Storage Systems) Regulation 2008.
- NSW Department of Environment, Climate Change and Water (DECCW) (2010) — Vapour Intrusion: Technical Practice Note (DECCW, 2010a)
- NSW DECCW (2010b) — UPSS Technical Note: Decommissioning, Abandonment and Removal of UPSS.
- NSW DECCW (2010c) — UPSS Technical Note: Site Validation Reporting.
- NSW Environment Protection Authority (EPA) (1995) — Contaminated sites: sampling design guidelines.
- NSW EPA (2014a) — Waste Classification Guidelines – Part 1: Classifying Waste (the “Waste Guidelines”).
- NSW EPA (2014b) — Technical Note: Investigation of Service Station Sites.
- NSW EPA (2015) — Guidelines on the Duty to Report Contamination Under the Contaminated Land Management Act 1997.
- NSW EPA (2017) — Contaminated Sites: Guidelines for the NSW Site Auditor Scheme 3rd Edition.

- NSW Department of Urban Affairs and Planning (DUAP) (1998) — Managing Land Contamination, Planning Guidelines SEPP 55–Remediation of Land.
- Western Australia Department of Health (WA DoH) (2009) — Guidelines for the Assessment, Remediation and Management of Asbestos-Contaminated Sites in Western Australia (WA DoH, 2009).
- WA DoH (2018) — Guidelines for the Assessment, Remediation and Management of Asbestos-Contaminated Sites in Western Australia – Summary Update 2018 (WA DoH, 2018).

2.3 Standards

The following standards have been considered for remediation and validation planning:

- Australian Standard 4361.2-1998 — Guide to Lead Paint Management, Part 2: Residential and Commercial Buildings.
- Australian Standard 1141.3.1–2012 — Methods for sampling and testing aggregates.
- Australian Standard AS4482.1:2005 — Guide to the Investigation and Sampling of Sites with Potentially Contaminated Soil. Part 1: Non-volatile and Semi-volatile Compounds.
- Australian Standard AS4482.2:1999 — Guide to the Sampling and Investigation of Potentially Contaminated Soil. Part 2: Volatile Substances.

2.4 Codes of practice

The following state and national codes of practice have been considered for remediation planning:

- Safe Work Australia (2018) — Model Code of Practice: How to safely remove asbestos.
- SafeWork NSW (2014) — Managing Asbestos in or on Soil (March 2014).
- SafeWork NSW (2019a) — How to Safely Remove Asbestos (August 2019).
- SafeWork NSW (2019b) — How to Manage and Control Asbestos in the Workplace (August 2019).
- SafeWork NSW (2019c) — Construction Work (August 2019).
- SafeWork NSW (2019d) — Demolition Work (August 2019).
- SafeWork NSW (2019e) — Excavation Work (August 2019).
- SafeWork NSW (2019f) — Work Health and Safety Consultation, Cooperation and Coordination (August 2019).

3 BACKGROUND

The site/ development area has been the subject of the following known contamination investigations which pertained to the entire Lot 10 in DP 1061237 and Lot 5 in DP 804051 boundaries, and a summary of each assessment is provided in the following subsections:

- Zoic Environmental Pty Ltd (Zoic) (2017) — *Draft Preliminary Site Investigation, Proposed Lighthorse Business Hub, Corner of M4 and M7 Motorways, Eastern Creek NSW* (ref: 17105, August 2017).
- Environmental Earth Sciences (2019a) — *Proposed Light Horse Interchange Business Hub (SSD 9667) – Contamination Assessment for Area-A* (ref: 117102_V4, March 2019).
- Environmental Earth Sciences (2019b) — *Area B - Proposed Light Horse Interchange Business Hub (SSD 9667) – Contamination Assessment at Ferrers Road, Eastern Creek NSW* (ref: 118069_V3, March 2019).

3.1 Zoic (2017)

3.1.1 Investigation

Zoic completed a Phase 1 Preliminary Site Investigation (PSI) for the 'Area A' portion on the western side of Eastern Creek only, which included the following components:

- A desktop review of available site history, aerial imagery and NSW Environment Protection Authority (EPA) records;
- Review of other available historic information provided by the Trust;
- Review of the site environmental setting; and
- Site walkover inspection.

Key findings of the Zoic (2017) report investigation included:

- Entire Lot 10 / DP1061237 (Area A) portion is approximately 72 hectares in area;
- Site was used for defence purposes since circa 1943 to the 1990s. Following identified land uses for the 'Area A' portion included:
- Former Wallgrove Army Base used the site as a camp and training facility since c.1943;
- Signal transmission station from circa 1960s to the 1990s;
- Staging camp for post-WWII migrants;

- Former site infrastructure associated with the Wallgrove Army Base included the camp compound and wastewater treatment plant (WWTP);
- Two underground storage tanks (USTs) were noted adjacent the transmission building which represented a potential primary source of petroleum hydrocarbon impact contamination;
- Areas of soil disturbance identified included construction of man-made drainage channels and use of uncontrolled fill material;
- Following cessation of use by Defence the Lot 10 DP 1061237 (Area A) portion was predominantly used for agricultural / grazing purposes (approximately over the last 10 5years);
- The inspection identified fragments of bonded fibre-cement material (potential asbestos containing material (PACM)), and potentially lead paint upon the ground surface in footprints of demolished Wallgrove Army Base camp buildings, and PACM used in some existing buildings;
- Moderate to high salinity potential was identified based upon desktop information. Depth to groundwater was expected to be shallow around the watercourses and monitoring wells were observed on site.
- A SafeWork NSW search of dangerous goods or review of Council planning certificate (under Section 149 (2) and (5)) was not undertaken as part of the PSI. The site was not shown to be listed on the NSW EPA's register of contaminated sites, with there being no other listed or notified sites on the register within a one-kilometre radius of site;

According to the NSW Protection of Environment Operation Act 1997 (POEO Act) public register, there were eight POEO Act licensed activities operating within a one-kilometre radius of the site:

- Roads and Maritime Services — road construction at the M4 Motorway to the north of the site;
- Waste Assets Management Corporation — Eastern Creek Waste Management Centre to the immediate south of the site;
- LMS Energy Pty Ltd — Two gas utilisation facilities to the immediate southeast of the site;
- Aluminium Specialities Group Pty Ltd — Metal waste generation facility approximately 175m southwest of the site;
- Suez Recycling & Recovery Pty Ltd — compositing facility approximately 540m south of the site;
- EDL LFG (NSW) Pty Ltd — Generation of electrical power from gas facility approximately 550m south of the site;

- Eastern Creek Operations Pty Ltd — Waste recovery, composting and nonthermal treatment of general waste facility approximately 960m south of the site;
- No sites were listed as being part of the NSW EPA per- and polyfluoroalkyl substances (PFAS) investigation program within a 2 km radius of the site.

3.1.2 Potential areas of concern identified

Main areas of potential areas of concern (PAOC) identified in the Zoic (2017) report are summarised in **Table 1:** .

Table 1: Potential areas of concern (Zoic, 2017)

Area of Concern	Property	Details
PAOC-1	Former army compound & transmission area	• Identified uncontrolled fill introducing potential chemical contamination and potential asbestos containing materials (PACMs). • Former transmission area antenna with potential use of grease / heavy oils, and heavy metals associated with use of copper matting. • Two underground storage tanks (USTs) adjacent to the main compound building being primary source of petroleum hydrocarbon impact to soil and/or groundwater.
PAOC-2	Former army camp	• Remnant soil mounds of unknown material introducing potential chemical contamination and PACM. • Footprint of former buildings for potential uncontrolled filing and PACM. • Potential for buried waste, noted to be a common practice on military bases immediately following WWII, by introducing potential chemical contamination and PACM.
PAOC-3	WWTP	• Discharge channels and effluent discharge area present location where effluent would have been released upon the ground surface introducing potential biological impact and elevated nitrogen. • Potential that biosolids from the WWTP were buried onsite as per previous practices.
PAOC-4	General disturbance	• Potential for buried waste as noted to be a common practice on military bases immediately following world war II
PAOC-5	Surface waters	• Potential impact to groundwater and surface water (two creek lines in the southern portion of site including Eastern Creek

3.2 Environmental Earth Sciences (2019a)

3.2.1 Investigation

Environmental Earth Sciences (2019a) documents a Stage 2 Detailed Site Investigation (DSI) undertaken for Lot 10 in DP 1061237 (Area A). This Stage 2 DSI was prepared to address SSD – Planning Secretary's Environmental Assessment Requirements (SEARs) (SSD-9667) key issues which included:

- A detailed assessment of the extent and nature of any contamination of the soil, groundwater and soil vapour.

- An assessment of potential risks to human health and environmental receptors in the vicinity of the site.
- A description and appraisal of any mitigation and monitoring measures.
- Consideration of whether the site is suitable for the proposed development.
- The general scope of works to address requirements of the SEARs included:
- Assess the potential for site contamination through the identification of potential sources and potential contaminants of concern;
- Undertake a limited intrusive soil assessment to ascertain general soil contamination conditions of fill materials and associated risk profile;
- Provide recommendations for any additional Stage 2 DSI works to further delineate suspected soil and/ or groundwater contamination to ascertain if any unacceptable risk exists for future users of the site and the environment.

Environmental Earth Sciences (2019a) conducted the following detailed assessment of the PAOCs identified by Zoic (2017). A summary of Environmental Earth Sciences (2019a) investigation program is provided below with **Figure 3a** providing an illustration of investigation locations pertaining to the site / development boundary:

- PAOC-1 – Former Army compound and transmission area:
  - Eight test pits (IDs: DP1, TP1-TP6 and TP12);
- PAOC-2 – Former Army camp:
  - Four test pits (IDs: TP17-TP20);
  - Two surface sample locations (IDs: SS5 and SS6);
- PAOC-3 – WWTP including effluent discharge area:
  - Two test pits (IDs: TP13 and TP14);
  - Three surface sample locations (IDs: SS1, SS2 and SS4);
- PAOC-4 – General areas of soil disturbance / stockpiles:
  - Twelve test pits (IDs: TP7-TP11, TP15, TP16 and TP21-TP25);
  - One stockpile sample (ID: SS3).

The following surface water grab samples were collected to ascertain chemical quality and nutrient conditions:

- One from Eastern Creek (PAOC-5);

- Two from the WWTP (PAOC-3) (including testing for biological pathogens);
- One sample of ingress water (perched) encountered within the bedding sand adjacent to the two identified USTs at the transmission building (PAOC-1).

3.2.2 Findings and results

Following receipt of laboratory results for soil, there were exceedances of applicable interim criteria for human health and the environment for the proposed commercial/ industrial land use. Refer to **Table 8:** (**Section 8.1**) for a summary of these exceedances. A full results summary of Environmental Earth Sciences (2019a) is included in **Tables A1 – A2** (**APPENDIX A:**).

Bonded asbestos was identified in both Transmission Building and WWTP structures and upon the surface in close vicinity (AOC-1), and also within two stockpiles (AOC-4). Refer to **Table 9:** (**Section 8.1**) for a summary of these detections.

Results of surface water quality testing and analyses reported chemicals and geochemical parameters within acceptable thresholds for both drinking water (NHMRC/ NRMMC, 2011), and freshwater ecosystems (95% species protection level) (ANZECC / ARMCANZ, 2000).

Two water samples collected from the WWTP were analysed for total coliforms (including faecal coliforms and *E.coli*) and salmonella. Results indicated that the coliform levels in the water stored at these tanks were relatively low (< 8 cfu/ 100ml for faecal coliforms and *E.coli*). Salmonella was noted to be absent in both samples analysed.

3.2.3 Recommendations

The following actual areas of concern (AOCs) were confirmed following detailed assessment, with recommendations provided for the management of identified contamination (refer to **Figure 3a** for illustration of identified AOCs):

- AOC-1 – Former Army Compound and transmission area:
  - *Ex situ* decommissioning of the two identified primary sources of petroleum hydrocarbon impact (namely the two USTs adjacent to the transmission Building) with remediation of any secondary impacts (namely tank pit walls / base, bedding sands and/or perched water.
  - Removal of identified ACM within buildings/ structures by a licenced asbestos removalist (LAR).
  - Emu picking of surface soils impacted by bonded ACM with clearance by a licensed asbestos assessor (LAA) or competent person.
- AOC-3 – WWTP:
  - Discharge of stored water after assessing settled solids to ensure no treatment is required prior to discharge.
  - Minimising disturbance of settled solids as far as practicable.

  - Ensuring appropriate discharge permits have been received from relevant authorities (i.e. NSW EPA for discharge to environment or Sydney Water for discharge to sewer under a Trade Waste Agreement (TWA)).

- AOC-4 – Stockpiles:

  - Two stockpiles (IDs: STP7 and SP5) contained bonded ACM fragments which were recommended to be emu picked so that material can be validated for onsite reuse.

3.3 Environmental Earth Sciences (2019b)

3.3.1 Investigation

Environmental Earth Sciences (2019b) documented findings of a Stage 2 DSI undertaken for Lot 5 in DP 804051 (Area B). Assessment was undertaken in the following areas:

- Strip of land adjacent M4 corridor (proposed new access road).
- Eastern Creek riparian corridor.
- Western verge of Ferrers Road corridor.
- Assessment generally comprised the following:
- Limited desktop assessment.
- Assessment for potential sources of contamination.
- Targeted intrusive soil assessment to ascertain general soil contamination conditions and establish risk profile.
- Provision of recommendations for any additional intrusive investigations to further delineate identified soil contamination (and suspected groundwater contamination).

3.3.2 Findings and results

A desktop search was undertaken including review of historical aerial imagery and land titles which indicated the site had been used for grazing purposes and material had been stockpiled likely derived from works on the adjacent F4/ M4 works. No primary sources of contamination or gross surficial soil contamination was identified during fieldworks. A full results summary of Environmental Earth Sciences (2019b) is included in **Tables B1 – B2** (**APPENDIX A:**).

- Desktop review and field investigations identified the following AOCs:
- Seven stockpiles of material adjacent to Eastern Creek riparian corridor.
- Area/ stockpile of apparently illegal dumping on west shoulder of Ferrers Road (ACM fragments noted).

- Area of controlled filling (reworked natural material).
- Surface water within Farm Dam No.1.

3.3.3 Recommendations

Based upon findings and results the following recommendations were made for the management of contamination in this portion:

- Further detailed investigation for asbestos in identified tipped rubble upon the western verge of Ferrers Road if the proposed development extended to this area.
- Assessment of sediments at the bottom of the two farm dams if the proposed development extended to these areas.
- Conduct leachability testing using the toxicity characteristic leaching procedure (TCLP) to potentially revise-down initial waste classification if offsite disposal of stockpiled materials is required.

Note: As only part of Lot 5 DP 804051 is included within the proposed development boundary (**Figure 2**:) the only AOC from Area B that is relevant are the seven stockpiles adjacent to the Eastern Creek riparian corridor. As such this has been defined as AOC5 (**Table 8**:). Refer to **Figure 3b** for illustration of identified AOCs.

4 OBJECTIVES

4.1 Technical objective

This RAP has been prepared to document the procedure for appropriate management of contamination to soil deriving from historic uses of the site, such that following remediation works and associated validation there are no unacceptable risks to human health in a commercial/ industrial land use scenario or the environment.

4.2 Data quality objectives

The Data Quality Objectives (DQOs) have been set to ensure that the data collected is sufficiently reliable for validation purposes. The Quality Assurance (QA)/ Quality Control (QC) should be in accordance with the ASC NEPM (2013) guidelines and Australian Standard AS4482.1-2005. DQOs for the remediation are detailed in **Table 2**.

Table 2: Data Quality Objectives

Step	Description	Comment	Location in Plan
1	State the problem	The site requires remediation to manage reported soil contamination as a result of various historical use(s), in particular use by Defence on Lot 10, and miscellaneous stockpiling on both Lots (Environmental Earth Sciences 2019a and 2019b).	Section 3
2	Identify the decision	Remediation/ management of identified contamination and any unexpected findings of contamination is required to ensure that no unacceptable risk remains to future users of the site and the environment in a commercial/ industrial land use scenario.	Section 8 Section 9 Section 10
3	Identify the inputs for the decision	Findings from Zoic (2017) PSI assessment with review of their initial PAOCs. Observations from the site walkover and soil / water sampling undertaken by Environmental Earth Sciences (2019a and 2019b). Selection of appropriate criteria and procedures for offsite management of material in accordance with the POEO Act. Selection of appropriate validation criteria for soil and groundwater in accordance with ASC NEPM (2013). Collection and laboratory analysis of soil samples for validation purposes.	Section 3.1 Section 3.2 Section 3.3 Section 11 Section 7 Section 12.1
4	Define the boundaries for the study	The site is located at the junction of the M4 and M7 motorways and comprises part of Lot 10 DP 1061237 and part of Lot 5 DP 804051.	Section 5.1 Figure 2:
5	Develop a decision rule	For contaminant concentrations in soil to be considered acceptable for any land use criteria, the data set must conform to the following requirements: • 95% upper confidence limit (UCL) of the arithmetic mean of analytical results is below the site criteria; • Standard deviation is less than 50% of the site criteria; and • No single sample analytical result > 250% of criteria. For the purposes of validation, a site or sampling area cannot be considered uncontaminated or successfully remediated if the 95% UCL of the arithmetic average concentration exceeds guideline limits, and any chemical failing either of the abovementioned tests would require consideration of additional remediation and/or alternative management. Acceptable limits for QA/QC parameters have been adopted in **Section 17** and the ASC NEPM (2013) will be followed.	Section 12 Section 14
6	Specify tolerable limits on decision error	Most of the procedures in the NSW EPA (1995) *Sampling Design Guidelines* and ASC NEPM (2013) have risk probabilities associated with allowable error margins incorporated into them.	Section 18

Step	Description	Comment	Location in Plan
		Tolerable limits on decision error as discussed in USEPA (2006), NSW EPA (1995) and NSW EPA (2017) for Type I and Type II errors for hypothesis testing, and also determining if a suitable number of samples has been collected. Tolerable limits on decision error are 0.05 (alpha) for Type I errors, and 0.2 (beta) for Type II errors. To determine if a suitable number of samples have been collected the 'Procedure B' calculation (NSW EPA, 1995) should be considered. Qualitative and quantitative measures of quality attributes typically involve Data Quality Indicators (DQIs). The principal DQIs are precision, bias (accuracy), representativeness, completeness, comparability, and sensitivity.	
7	Optimise the design for obtaining data	The optimum design for obtaining data in order to achieve the Data Quality Objectives is as follows: • Only NATA-accredited environmental testing laboratories will be commissioned to analyse soil and groundwater samples conforming to the ASC NEPM (2013) - Schedule B(3) Guidelines on Laboratory Analysis of Potentially Contaminated Soils. • Review of previous contaminated land reports relevant to the site and the surrounding area where is available. • An assessment of the Data Quality Indicators to determine if the field procedures and laboratory analytical results are reliable. • Validation assessment will be undertaken by an experienced and qualified Environmental Scientist. Collection of QA/QC samples at frequencies prescribed in the ASC NEPM (2013).	Section 3 Section 10 Section 12 Section 18

5 SITE IDENTIFICATION AND SETTING

5.1 Location and property description

Site identification details are provided in **Table 3:** .

Table 3: Site identification

Item	Details
Owner	Western Sydney Parklands Trust
Addresses	Junction of M4 and M7 Motorways; Ferrers Road, Eastern Creek, NSW
Developable Area	~29.4 hectares (ha)
Limit of works area	~35 ha
Property identifiers	Part Lot 10 in DP 1061237; and, Part Lot 5 in DP 804051
Current zoning	State Environmental Planning Policy (Western Sydney Parklands) 2009
Proposed land use	Commercial / Industrial
Regulatory Authority	Western Sydney Parklands Trust
Site Location and Layout	**Figure 1**: (Site Locality); **Figure 2**: (Site layout and features).

Development design drawings have been provided displaying the proposed sub-division lot boundaries and the proposed development boundary in **APPENDIX C:**.

5.2 Site surrounds

The following adjacent land uses were observed at the time of the site inspection:

- North – Vehicular thoroughfare of M4 motorway immediately adjacent. Rural residential and commercial / industrial land uses beyond. Eastern Creek flows downstream in a northerly direction from site.
- South – Eastern Creek Waste Management Centre immediately to the south. Newly developed commercial properties beyond. A former brick pit is located offsite to the south. Upstream reaches of Eastern Creek are situated south of site.
- East – Vehicular thoroughfare of Ferrers Road immediately adjacent, with Sydney Motor Sport Park Raceway property further afield. Water supply catchment of Prospect Reservoir located approximately 1.3 kilometres east of site.
- West – Vehicular thoroughfare of M7 motorway immediately adjacent, commercial / industrial properties beyond.

5.3 Physical setting

The following information on site physical setting has been summarised from the Zoic (2017) assessment.

5.3.1 Topography and drainage

The site generally slopes downward toward the northeast (in the direction of Eastern Creek), with elevations at the site ranging from 54 metres above Australian Height Datum (mAHD) to 42 mAHD. Given the majority of the site is currently unsealed and covered with vegetation it is expected that the great majority of precipitation would infiltrate into the underlying soil and recharge the upper aquifer, or infiltrate into creeks onsite.

5.3.2 Hydrology

Surface water flows onsite occur in two natural channels which run generally southwest to northeast (Reedy Creek and Eskdale Creek). Both of these creeks flow into Eastern Creek which constitutes the eastern site boundary.

5.3.3 Regional geology

Based on NSW Department of Minerals and Energy (1991) - *1:100,000 Penrith Geological Series Sheet 9030*, the majority of the site is underlain by Quaternary deposits of fine-grained sand, silt and clay.

The north-western corner of the site is underlain by Bringelly Shale of Wianamatta Group, consisting of shale, carbonaceous claystone, claystone, laminate, fine to medium grained lithic sandstone, rare coal and tuff.

5.3.4 Hydrogeology

The Zoic (2017) assessment undertook a review of Department of Primary Industries (DPI) Office of Water registered groundwater wells. Findings indicated there were seven registered bores within a 2 km radius of the site, with the closest registered well located approximately 1.4 km south of the site. All seven wells were registered for monitoring uses. The depth to standing water was not reported, but the wells were drilled to depths ranging between 12 – 27 metres below ground level (mBGL).

With the site situated over alluvial floodplain deposits, it is likely that the uppermost aquifer has a hydrogeologic connection with Eastern Creek, and therefore the standing water level (SWL) of groundwater would be at a commensurate elevation.

Given the presence of creeks within the site, it is anticipated that the groundwater beneath the site is relatively shallow near the water courses and would be expected to increase with distance from the watercourses.

5.3.5 Salinity

A review of NSW DIPNR (2002) – *Map of Salinity Potential in Western Sydney* indicated that the site is situated in an area of moderate to high salinity potential. In general salinity is most likely to occur on lower slopes, foot-slopes and along creek lines.

6 SITE HISTORY

Historical use of the site was comprehensively reported in Zoic (2017), with the following key feature on land use mentioned:

- Site predominately used by defence since 1943. Anecdotal information indicates that the site was part of the Wallgrove Army Base which was utilised as a staging and training area during World War II.
- The army camp operated as a wireless chain and as a migrant hostel after the end of World War II. The camp was occupied by various army units until circa 1970s, after which the Royal Australian Air Force (RAAF) took over the site.
- Based upon historical aerial photography, the army camp was operated until the 1980s. Radio transmission and antenna operated from the 1960s until the 1990s.
- No manufacturing or industrial processes are known to have been undertaken at the site, with the exception of wastewater treatment plant (WWTP) in the central portion. The site has been used for cattle grazing for at least the last 10 years.

7 REMEDIATION CRITERIA

In accordance with current legislation, Environmental Earth Sciences defers to the ASC NEPM (2013) for adopted remediation criteria. Typically for contaminant concentration to be considered acceptable for the respective land use criteria, the data set must conform to the following requirements:

- the 95% upper confidence limit (UCL) of the arithmetic mean of analytical results is below the site criteria;
- the arithmetic (or geometric in cases where the data is log normally distributed) mean is below the site criteria;
- the standard deviation is less than 50% of the site criteria; and
- no single sample analytical result is greater than 250% of the site criteria.

A range of threshold guidelines will be adopted from ASC NEPM (2013) as interim remediation criteria for the assessment of acceptable concentrations of contaminants in soils and groundwater. For soil, these investigation levels are derived from toxicity of substances and estimated exposure of humans under various land use scenarios.

As there were no indications from historical information that the site was ever used for bulk storage and/or use of aqueous fire-fighting foams (AFFFs), investigation for per- and polyfluoroalkyl substances (PFAS) chemicals was not required.

7.1 Soil investigation levels

7.1.1 Health investigation levels (HILs)

Remediation criteria for soils have been adopted from ASC NEPM (2013) to be protective of human and ecological receptors for the commercial/ industrial scenario. Appropriate health-based investigation levels (HILs) will be applied to the developed areas of site used commercial / industrial purposes. These HILs are taken from the ASC NEPM (2013) and are presented for reference in **Table 4:** .

Table 4: Health investigation levels for soil contaminants

Chemical	Health-based investigation levels (mg/kg) [1]
	Commercial / industrial [2] D
Metals and Inorganics	
Arsenic [3]	3,000
Cadmium	900
Chromium (VI)	3,600
Copper	240,000
Lead [4]	1,500
Mercury (inorganic)	730
Nickel	6,000
Zinc	400,000
Polycyclic Aromatic Hydrocarbons (PAHs)	
Carcinogenic PAHs (as BaP TEQ) [5]	40
Total PAHs [6]	4,000

Notes:

1. Generic land uses are described in detail in Schedule B7 (Section 3) of ASC NEPM (2013)
2. HIL D – Commercial / industrial land use scenario.
3. Arsenic: HIL assumes 70% oral bioavailability. Site-specific bioavailability may be important and should be considered where appropriate (refer to *Schedule B7* of ASC NEPM (2013)).
4. Lead: HIL is based on blood lead models (IEUBK for HILs A, B and C and adult lead model for HIL D where 50% oral bioavailability has been considered. Site-specific bioavailability may be important and should be considered where appropriate.
5. Carcinogenic PAHs: HIL is based on the 8 carcinogenic PAHs and their TEFs (potency relative to B(a)P) adopted by CCME 2008 (refer Schedule B7 of ASC NEPM (2013)). The B(a)P TEQ is calculated by multiplying the concentration of each carcinogenic PAH in the sample by its B(a)P TEF, given below, and summing these products.

PAH species	TEF	PAH species	TEF
Benzo(a)anthracene	0.1	Benzo(g,h,i)perylene	0.01
Benzo(a)pyrene	1	Chrysene	0.01
Benzo(b+j)fluoranthene	0.1	Dibenz(a,h)anthracene	1
Benzo(k)fluoranthene	0.1	Indeno(1,2,3-c,d)pyrene	0.1

Total PAHs: HIL is based on the sum of the 16 PAHs most commonly reported for contaminated sites (WHO 1998). The application of the total PAH HIL should consider the presence of carcinogenic PAHs and naphthalene (the most volatile PAH). Carcinogenic PAHs reported in the total PAHs should meet the B(a)P TEQ HIL. Naphthalene reported in the total PAHs should meet the relevant HSL.

7.1.2 Ecological investigation levels (EILs)

The ecological investigation levels (EILs) assigned by the ASC NEPC (2013*) Schedule B5a - Guideline on Ecological Risk Assessment* are adopted for this assessment. This guideline presents the methodology for deriving terrestrial EILs using both fresh and aged (i.e. > 2 years old) contamination for soil with in a commercial/ industrial land use scenario.

The methodology been developed to protect soil processes, soil biota (flora and fauna) and terrestrial invertebrates and vertebrates. The proposed land use on the site is commercial / industrial and hence these EILs have been adopted for this assessment.

The values presented for zinc, chromium (III), copper and lead are added contaminant limits (ACLs) based on added concentrations. The EIL is calculated from summing the ACL and the ambient background concentration (ABC) to derive the site-specific soil quality guideline (SQG) taking into account the effect caused by pH, exchangeable cations, iron and total organic carbon in soil that can affect concentration toxicity data.

No samples were analysed for cation exchange capacity (CEC) or iron content which are required to calculate site specific EILs. For this reason, conservative values have been used instead.

Values presented for arsenic, naphthalene and DDT are generic EILs based on total concentrations and fresh contaminants. The EIL for lead has been calculated using the most conservative SQG value based upon the reported pH and exchangeable cation values. A summary of the EILs for aged contamination in soil (>2 years) for the adopted land use are resented in **Table 5:** .

Table 5: Site specific EILS

Analyte	Ambient background concentration (mg/kg) [1]	Added contaminant limit (mg/kg) [2]	EIL – commercial / industrial (mg/kg)
Arsenic	----	----	160
Naphthalene	----	----	370
Chromium III	10	310	320
Copper	30	85	115
Lead	----	1,800	1,800
Nickel	5	55	60
Zinc	120	110	330

Notes:

1. Ambient background concentrations (ABC) were calculated as per Olszowy *et al* (1995) for NSW old suburbs / low traffic.
2. Added contaminant limits determined using most sensitive value for CEC and pH

7.2 Soil screening levels

7.2.1 Health screening levels (HSLs)

For petroleum hydrocarbons, health screening levels (HSLs) have been derived in ASC NEPM (2013) based upon fraction ranges of hydrocarbons together with soil texture classes. The actual soil texture class applied will be determined during description of soil in the field assessment.

The HSL criteria, whilst non-limiting (NL) for vapour intrusion, are provided to prevent the occurrence of phase-separated hydrocarbons (PSH). The soil texture for applications of HSLs at the site will be "clay". Fractions F3 (>C_{16}-C_{34}) and F4 (>C_{34}-C_{40}) are semi-volatile and are not of concern for vapour intrusion, however, exposure to human receptors can occur via direct pathways such as dermal contact.

Health screening levels for HSL-D for clay soil were used to screen petroleum hydrocarbons in soil for potential vapour intrusion risk. Values for clay with depth criterion to four metres was used. The HSL criteria are summarised in **Table 6:** .

7.2.2 Ecological screening levels (ESLs)

For petroleum hydrocarbons, ESLs have been derived in ASC NEPM (2013) based upon fraction ranges of hydrocarbons, BTEXN component and benzo(a)pyrene (BaP) together with soil texture classes. These ESLs are of low reliability except for the volatile and semi-volatile hydrocarbon fractions which are of moderate reliability. Nonetheless the ESLs will be adopted for the investigation to be protective of soils in a commercial / industrial land use scenario.

The adopted ESLs are designed to be protective of soil fauna, soil processes plants. The ASC NEPM (2013) states that these factors only apply within the rhizome (i.e. zone in the top two metres of soil) and as such ESL criteria need not be applied to chemical results below this depth. ESL threshold criteria are summarised in **Table 6:** .

It should be noted that the ASC NEPM (2013) ESL for benzo(a)pyrene are low-reliability values and as such are considered over conservative. To develop the ESL thresholds in ASC NEPM (2013), a review of Canadian soil quality guidelines was undertaken for BTEX and benzo(a)pyrene, with the Australian methodology applied to the ecotoxicological data as far as possible to derive equivalent ESLs.

It is recognised that the bioavailability of B(a)P and hence toxicity can reduce through sorption to organic material in the soil, with ageing, and with certain soil properties and other factors. However, methods have not yet been developed that can reliably measure the bioavailability of B(a)P and using bioavailability or bio-accessibility measures to derive site-specific criteria for organic contaminants is not well established in Australia (CRC Care, 2017).

With respect to the ESLs, the ASC NEPM (2013) did not consider bioavailability, and therefore there is a concern that the value for benzo(a)pyrene may be overly conservative, hence the CRC Care (2017) threshold value of 33 mg/kg has been adopted.

7.2.3 Management limits for hydrocarbon fractions

Management limits for F1 and F2 are applied after consideration of relevant ESL and HSL criteria and are generally to be protective for dermal contact risk. The adopted management limits threshold criteria are summarised in **Table 6:** .

Table 6: Management limits, ESLs, and HSLs (mg/kg dry soil)

Analyte	Soil Texture	Management Limits	ESLs	HSL D Clay Soils
Commercial / industrial land-use				
F1 (C_6- C_{10})	Coarse	700	215 **	310 (0 - < 1m) 480 (1 - < 2m)
	Fine	800		
F2 (>C_{10}-C_{16})	Coarse	1,000	170 **	NL
	Fine	1,000		
F3 (>C_{16}-C_{34})	Coarse	2,500	1,700	----
	Fine	3,500	2,500	
F4 (>C_{34}-C_{40})	Coarse	10,000	3,300	----
	Fine	10,000	6,600	
Benzene	Coarse	----	75	4 (0 - < 1m) 6 (1 - < 2m) 9 (2 - < 4m) 20 (> 4m)
	Fine	----	95	
Toluene	Coarse	----	135	NL
	Fine	----	135	
Ethylbenzene	Coarse	----	165	NL
	Fine	----	185	
Xylenes	Coarse	----	180	NL
	Fine	----	95	
Naphthalene	Coarse	----	----	NL
	Fine	----		
Benzo(a)pyrene	Coarse	----	33	----

Notes:

** Moderate reliability criteria

NL No risk-based limits are required to be assessed

7.2.4 Asbestos

Asbestos validation criteria for soil impact in a commercial / industrial land use scenario (ASC NEPM, 2013) are summarised in **Table 7:** .

Table 7: Health screening levels for asbestos in soil

HSL D concentration (%w/w)	
Bonded asbestos (impacted volume)	0.05 %w/w
Fibrous asbestos (FA) / asbestos fines (AF)	0.001 %w/w
No visible asbestos on surface soils.	

Notes:

%w/w Percentage weight for weight

8 CURRENT CONCEPTUAL SITE MODEL

8.1 Extent of soil contamination

8.1.1 Chemical contamination

The identified extent of contamination within soil as indicated within Environmental Earth Sciences (2019a and 2019b) are summarised in **Table 8:** . Refer to **Tables A1 – B2** (**APPENDIX A:**) for a summary of investigation results from Environmental Earth Sciences (2019a and 2019b) assessments. Refer to **Figure 3a** and **Figure 3b** for corresponding locations of soil exceedances.

Table 8: Summary of exceedances

AOC ID	Sample ID	Analyte	Concentration (mg/kg)	Criteria Exceeded
Area A				
AOC-1	TP3_1.2-1.3m	TRH >C_{10}-C_{16}	5,600	MLs; ESL
		TRH >C_{16}-C_{34}	2,720	ESL
	TP4_0-0.2m	Cu	87	EIL
	TP12_0-0.2m	Cu	158	EIL
		Zn	2,590	EIL
AOC-3	TP14_0-0.2m	Cu	394	EIL
		TRH >C_{16}-C_{34}	6,460	MLs
AOC-4	TP7_0.1-0.2m	Ni	114	EIL
	TP21_0.1-0.3m	Cu	371	EIL
		Ni	84	EIL
		Zn	4,120	EIL
	TP21_0.8-0.9m	Zn	648	EIL
	TP22_0.2-0.3m	Cu	258	EIL
		Zn	3,950	EIL
Area B				
AOC-5	SBH2	Cu	65	EIL
	SBH5	Cu	72	EIL

Notes:

mg/kg	Milligrams per kilogram
TRH	Total recoverable hydrocarbons (carbon fraction range)
EIL	Ecological Investigation Level for commercial / industrial land use (ASC NEPM, 2013)
ESL	Ecological Screening Level for commercial / industrial land use (ASC NEPM, 2013)
MLs	Management Limits for petroleum hydrocarbons in commercial / industrial land use scenario (ASC NEPM, 2013)

8.1.2 Asbestos

During the Environmental Earth Sciences (2019a) assessment of Lot 10 in DP 1061237 asbestos was identified within buildings and structures associated with the former Army Compound and transmission area (AOC-1) and WWTP (AOC-3) structures. Further to the identification of asbestos within structures, bonded ACM fragments were observed on the surface of soils in the general vicinity of these structures.

During the Environmental Earth Sciences (2019b) assessment of Lot 5 in DP804051 bonded ACM fragments were identified in stockpiles of materials (soil and building rubble) however, the stockpile containing this material was outside the development boundary. It is noted that stockpiles within the development boundary were not observed to contain bonded ACM

fragments, however care should be taken to remain vigilant for potential ACM when excavating stockpiles. The detections of asbestos are summarised below in **Table 9**: .

Table 9: Summary of asbestos detections within development boundary

AOC ID	Sample ID/ Sample Location	Asbestos (Y/N)	Asbestos Type
AOC-1	PACM1/ TP1	Yes	Chrysotile
AOC-1	PACM2/ Army compound	Yes	Chrysotile, amosite and crocidolite
AOC-4	PACM3/ TP11	Yes	Chrysotile, amosite and crocidolite
AOC-4	PACM4/ TP21	Yes	Chrysotile

Refer to **Figure 3a** and **Figure 3b** for corresponding locations of confirmed asbestos during the Environmental Earth Sciences (2019a and 2019b) respectively.

8.2 Chemicals of concern

The findings from the completed investigations and historic site uses, potential contaminants of concern in soils are considered to be:

- Heavy metals: copper (Cu), nickel (Ni) and zinc (Zn).
- Total recoverable hydrocarbons (TRHs) (Fractions >C10).
- Naphthalene.
- ACM in the form of bonded cement sheeting.

8.3 Potential receptors

Potential receptors include, persons, structures, utilities, ecological receptors and water supply wells that may or may not be adversely affected by contamination. Potential receptors identified for the site include the following:

- Human:
  - Future onsite construction workers.
  - Future onsite maintenance contractors (within subsurface trenches or pits).
  - Future onsite employees and visitors.

- Ecological:
    - Soil processes, soil fauna and flora;
    - Groundwater environments;
    - Freshwater environment of Eastern Creek (aquatic organisms and fauna).

8.4 Exposure pathways

Receptors identified include both human and ecological. For humans, there must be a mechanism for the people to contact groundwater or to be exposed to contaminants from the groundwater. Soil impact may also be present as a potential exposure pathway. Pathways considered potentially complete are:

- Potential ingestion and dermal contact with contaminants in soil.
- Potential inhalation of asbestos fibres in soil.
- Potential inhalation of volatile petroleum hydrocarbon vapours from impacted soil, with possible intrusion into future indoor airspaces.

Groundwater is considered to be an incomplete pathway due to:

- Underlying geology (i.e. clay and shale) of weathered Bringelly shale acting as an aquitard as evident by noted perched water within UST bedding sands (Environmental Earth Sciences, 2019a); and
- Anticipated depth to groundwater expected to be < 8 mBGL based upon registered bore information (Zoic, 2017).

9 REMEDIATION OPTIONS EVALUATON

9.1 Remediation hierarchy

The preferred remediation strategy is provided taking into consideration the desired environmental outcome. The preferred hierarchy for remediation as outlined within ASC NEPM (2013) is:

- Onsite treatment of the contamination so that it is destroyed, or the associated risk is reduced to an acceptable level;
- Offsite treatment of excavated soil, so that the contamination is destroyed, or the associated risk is reduced to an acceptable level, after which soil is returned to the site;
- Consolidation and isolation of the soil onsite by containment with a properly designed barrier;

- Removal of contaminated material to an approved site of facility, followed, where necessary, by replacement with appropriate material;
- Where the assessment indicates remediation would have no net environmental benefit or would have a net adverse environmental effect, implementation of an appropriate management strategy.

9.2 Options evaluation and selection

9.2.1 Evaluation components

The following criteria have been used to determine the most suitable methodology for management of impacted fill material:

- **Regulatory acceptance** – compliance to meet regulatory and other stakeholder expectations;
- **Technical suitability** – whether the method chosen is capable of meeting the stated objectives;
- **Practicality** – refers to the practicality of applying the option given site- specific constraints such as access availability, geology etc;
- **Cost** – refers to the initial financial outlay of the remedial technique and associated level of risk reduction;
- **Timeframe** – refers to the duration required to deliver remedial goals; and
- **Sustainability** – including greenhouse gases, energy consumption, collateral environmental damage and the overall (net) benefit considering the entire project (e.g., safety of workers, effect on neighbours, transportation, movement of wastes, etc).

9.2.2 Evaluation and selection process

In accordance with common industry practice, potential remediation options have been presented and evaluated for project suitability on the basis of the hierarchy presented (**Section 9.1**) and the ability to address the above criteria.

The options are then ranked relative to the other options to indicate which ones are most appropriate for the site. This qualitative scoring / ranking system uses a score of ‘0’ to ‘2’ for each criterion being assessed; with ‘0’ corresponding to the lowest score and ‘2’ as the highest. The remedial options evaluation and screening matrix and the scoring system that has been applied for suitability considerations at this site are presented in **Table 10:** .

Based on the above evaluation, from technical perspective targeted excavation with bioremediation is selected as the most effective remedial option, along with potentially needing to dispose of an amount of impacted soil offsite (if required). Options for remediation of the identified AOCs fell generally into two categories:

- those with low total scores between ‘0’ and ‘8’; and
- those with total scores between ‘9’ and ‘12’.

Those with the low scores are considered inappropriate for application at the site due to issues related to practicality, cost, or technical suitability. Conversely, methods which score between ‘10’ and ‘12’ are considered to be potentially applicable (in certain cases).

Table 10: Options evaluation and screening matrix

	Selection Criteria						
Issue / Potential Options	**Regulatory Acceptance**	**Technical Suitability**	**Practicality**	**Cost**	**Timeframe**	**Sustainability**	**Total score**
AOC-1: Remediation of UPSS							
Removal of UPSS; excavation of any TRH impacted material; onsite encapsulation.	1	0	0	1	2	2	**6**
Removal of UPSS; excavation of TRH impacted bedding material; offsite disposal to landfill	2	2	2	0	2	0	**8**
Removal of UPSS; excavation of TRH impacted bedding material; onsite bioremediation; onsite reuse.	2	2	2	2	2	2	**12**
AOC-1 and AOC-3: Management of ACM upon surficial soils							
Emu pick; clearance; onsite management in containment cell; ongoing management through LTEMP.	2	0	0	2	2	1	**7**
Emu pick; clearance; offsite disposal to landfill	2	2	2	1	2	0	**9**
AOC-1 and AOC-3: Management of bonded ACM in structures							
Onsite management in containment cell; ongoing management through LTEMP.	2	0	0	2	1	2	**7**
Offsite disposal to landfill	2	2	2	0	1	0	**8**
AOC-3 and AOC-4: Management of ACM impacted stockpiles							
Treatment for visible asbestos; onsite reuse under a barrier (e.g. road seal)	2	1	2	2	0	2	**10**
Onsite management in containment cell; ongoing management through LTEMP.	2	2	1	1	0	2	**8**
Offsite disposal to landfill	2	2	1	0	2	0	**7**

10 REMEDIATION ACTION PLAN

10.1 Remediation of UPSS (AOC-1)

Due to the proximity of the USTs to the existing Transmission Building structure, it is recommended that remediation of the UPSS be undertaken following demolition. This will enable tracking-out of any impacted soil that may extend beneath this building's footprint.

The following points outline the recommended procedure for remediation of the existing UPSS and associated tank pit bedding materials adjacent to the Transmission Building:

1. It is recommended that the Trust are informed of the intent to decommission and remove the UPSS at least 30 days prior to commencement of remediation.

2. Pumping of any residual contents from the two USTs, with disposal of liquids in accordance with the Waste Guidelines, appropriate transportation by a liquid waste contractor and disposal to an appropriately licensed facility.

3. Excavation of UPSS infrastructure (including two known 5,000 L USTs, suction lines, ventilation pipes).

4. Decommissioning, destruction and offsite disposal of USTs and other UPSS infrastructure in accordance NSW DECCW (2009 and 2010b) procedures. A tank destruction and degas certificate should be produced by a qualified tank removal contractor for each UST to confirm appropriate management has been undertaken.

5. Establish a pad for temporary stockpiling of tank pit bedding material with appropriate bunding and drainage. Prior to setting up stockpiling pad, collect surface baseline soil samples to ascertain baseline surface soil quality.

   Excavation of tank pit bedding materials upon stockpile pad. Upon excavation, where a clear visual / olfactory distinction can be made to differential clean material against impacted material, separate stockpiles will be generated, and these will be managed separately.

   It is anticipated that the excavation will not require significant pump-out of water during remediation works, as the excavation is not likely to intersect the water table. Perched water is likely to be present in limited quantities, and it is recommended that a sump be excavated and to the extent practicable all impacted groundwater be removed and disposed accordingly.

6. Conduct assessment of stockpiled tank pit bedding material to initially ascertain suitability for onsite reuse, or alternatively assess baseline conditions for bioremediation. If tank pit bedding material is considered suitable, keep stockpiled until validation assessment of the walls / base of the tank pit excavation can be completed.

7. Conduct validation assessment of soil quality conditions of the walls / base of tank pit excavation. Soils which are identified as impacted should be excavated and added to the treatment stockpile. All impacted soils will be chased-out to the extent practicable with

the excavation broadened / deepened until either there is no further evidence of impact, or site constraints prevent further excavation.

8. Pending that tank pit bedding materials are initially unsuitable for onsite reuse, subject to a program of enhanced bioremediation with associated regular aeriation / turning and process monitoring.

9. When process monitoring indicated that the stockpiles material is suitable for onsite reuse, the most suitable option would be to reinstate this material back into the tan pit excavation.

10.2 Management of ACM in structures and upon surface soil (AOC-1 and AOC-3)

Due to observed bonded ACM in buildings/ structures at both the Transmission Building (AOC-1) and WWTP (AOC-3), the following procedures are recommended during demolition:

1. Establish exclusion zone around area(s) where bonded ACM fragments have been identified. Appropriately signpost to communicate “asbestos hazard” and “asbestos removal works.

2. Licensed Asbestos Assessor (LAA) / appropriately qualified person to set-up static or positional asbestos fibre monitoring pumps (with placement pending prevailing wind conditions and with consideration to residences, site offices or other such sensitive receptors). Samples are recommended to be collected on a daily basis for the duration of removal works.

3. Control measures to suppress dust are recommended, such as wetting down ACM-impacted material (note: the use of high-pressure hoses is not permitted).

4. A SafeWork NSW licensed ‘Class B’ (non-friable) asbestos removalist (LAR) should be commissioned. The LAR removalist should initiate notification to remove bonded asbestos with SafeWork NSW (this process takes five working days from the date of notification).

5. All waste ACM collected as part of the demolition and visible fragments ACM emu-picked from the surface should be stored in appropriate receptacles that are double-lined LDPE plastic, sealed, and appropriately labelled as “asbestos waste”.

6. Waste bonded ACM can either be:

    a. Disposed offsite by the licensed ‘Class B’ removalist, and taken to a waste facility that it licensed to accept asbestos waste; or

    b. Managed onsite in a specially constructed encapsulation cell and managed in accordance with a Long-term Environmental Management Plan (LTEMP).

7. If disposal if opted, a waste classification / advice letter must be produced by the Class B LAR for submission to the facility licensed to accept asbestos waste prior to it leaving site. All asbestos waste > 10 m^2 must be tracked using the NSW EPA online *WasteLocate* service [https://wastelocate.epa.nsw.gov.au].

8. Once the LAA / competent person is satisfied that all visible broken fragments of bonded ACM have been removed, the LAA / competent person should then conduct visual clearance of the exclusion zone area involved in the demolition and asbestos removal.

9. Following clearance inspection, validation soil assessment should be undertaken. This will require gravimetric sampling over the footprints of remediation by collecting 10L composite samples and grading them through a 7 mm gauge sieve to obtain a 500 mL sample in accordance with ASC NEPM (2013) and WA DoH (2009) requirements.

   Each sample will be subjected to asbestos weight for weight (%w/w) percentage analysis at a NATA accredited laboratory with the results compared to asbestos w/w % commercial / industrial criteria outlined in ASC NEPM (2013).

10. An Asbestos Clearance Certificate (ACC) will then be prepared for the subject treated material and the original ACM impacted surface. This will include:

    a. SafeWork NSW Licence details of the 'Class B' removalist as well as evidence of the SafeWork NSW *Notification to Remove Bonded Asbestos*.

    b. Documentation of asbestos remediation/ removal works undertaken.

    c. Estimation of bonded ACM impacted areas / volumes and final volume / weight of bonded waste ACM collected for disposal.

    d. Results of daily air monitoring for airborne Asbestos fibres, including provision of laboratory certificates.

    e. Results of asbestos quantification analysis assessed against applicable %w/w criteria in ASC NEPM (2013).

    f. Conclusion on suitability for use of the remediated AOCs.

10.3 Management of ACM in stockpiles (AOC-3 and AOC-4)

Due to observed bonded ACM in stockpiles at AOC-3 (WWTP) and AOC-4 the following procedures are recommended for management:

1. Establish exclusion zone around stockpile(s) where bonded ACM fragments have been identified and where treatment is to be undertaken. Appropriately signpost to communicate "asbestos hazard" and "asbestos removal works.

2. Licensed Asbestos Assessor (LAA) / appropriately qualified person to set-up static or positional asbestos fibre monitoring pumps (with placement pending prevailing wind conditions and with consideration to residences, site offices or other such sensitive receptors). Samples are recommended to be collected on a daily basis for the duration of removal works.

3. Control measures to suppress dust are recommended, such as wetting down ACM-impacted material (note: the use of high-pressure hoses is not permitted).

4. Within the exclusion zone / treatment area, each stockpile should be spread-out into 100mm layers, with the LAR then subjecting the layer to an emu-pick to remove all visible asbestos. The LAA / competent person will then provide advice to the LAR either that:

    a. each layer is free of visible asbestos and another 100mm layer can be spread-out for inspection; or

    b. the layer still has visible asbestos and further picking in required.

5. All waste ACM collected as part of the demolition and visible fragments ACM emu-picked from the surface should be stored in appropriate receptacles that are double-lined LDPE plastic, sealed, and appropriately labelled as “asbestos waste”.

6. Waste bonded ACM can either be:

    a. Disposed offsite by the licensed ‘Class B’ LAR, and taken to a waste facility that it licensed to accept asbestos waste; or

    b. Managed onsite in a specially constructed encapsulation cell and managed in accordance with a Long-term Environmental Management Plan (LTEMP).

7. If disposal if opted, a waste classification / advice letter must be produced by the Class B LAR for submission to the facility licensed to accept asbestos waste prior to it leaving site. All asbestos waste > 10 m^2 must be tracked using the NSW EPA online *WasteLocate* service [https://wastelocate.epa.nsw.gov.au/].

8. Once the LAA / competent person is satisfied that all stockpile(s) have ben suitable treated for visible bonded ACM, the LAA / competent person should then conduct visual clearance of each stockpile.

9. Following clearance inspection, validation soil assessment should be undertaken for each stockpile. This will require gravimetric sampling by collecting 10L composite samples and grading them through a 7 mm gauge sieve to obtain a 500 mL sample in accordance with ASC NEPM (2013) and WA DoH (2009) requirements.

    Each sample will be subjected to asbestos weight for weight (%w/w) percentage analysis at a NATA accredited laboratory with the results compared to asbestos w/w % commercial / industrial criteria outlined in ASC NEPM (2013).

10. An ACC will then be prepared for the subject treated material and the original ACM impacted surface. This will include:

    a. SafeWork NSW Licence details of the ‘Class B’ removalist as well as evidence of the SafeWork NSW *Notification to Remove Bonded Asbestos*.

    b. Documentation of asbestos remediation / removal works undertaken.

    c. Estimation of bonded ACM impacted areas / volumes and final volume / weight of bonded waste ACM collected for disposal.

d. Results of daily air monitoring for airborne Asbestos fibres, including provision of laboratory certificates.

e. Results of asbestos quantification analysis assessed against applicable %w/w criteria in ASC NEPM (2013).

f. Conclusion on suitability for use of the remediated AOCs.

11. Material that it treated and cleared to be free of visible asbestos can then be beneficially reused onsite under a barrier (preferable a hardstand seal such as an asphalt road).

12. Following removal/ reuse of treated stockpile material elsewhere onsite, a clearance inspection should be undertaken by the LAA / competent person, with gravimetric sampling should be undertaken to validate the base footprints of each stockpile / treatment area. Following this the LAA / competent person should issue a separate ACC.

11 OFFSITE MATERIAL MANAGEMENT

Should material onsite be surplus to requirements, the following offsite management options are available:

- Beneficial reuse as virgin excavated natural material (VENM) in accordance with the definition set in the POEO Act (refer to **Section 11.1.1**); or
- Beneficial reuse of excavated natural material (ENM) with a resource recovery exemption (RRE) under Part 9, Clauses 91 and 92 of the Protection of the Environment Operations (Waste) Regulation 2014 - the excavated natural material exemption 2014 (ENM General Exemption) (refer to **Section 11.1.2**); or
- Disposal offsite as either waste material to a suitably licensed landfill of disposal site in accordance with the Waste Guidelines (refer to **Section 11.2**).

11.1 Beneficial reuse option

11.1.1 Beneficial reuse offsite as VENM

The Protection of the Environment Operations Act 1997 (POEO Act) defines virgin excavated natural material (VENM) as natural material (such as clay, gravel, sand, soil or rock fines):

- that has been excavated or quarried from areas that are not contaminated with manufactured chemicals, or with process residues, as a result of industrial, commercial, mining or agricultural activities; and
- that does not contain any sulfidic ores or soils or any other waste; and
- includes excavated natural material that meets such criteria for VENM as may be approved for the time being pursuant to a NSW EPA Gazettal notice.

Assessment and characterisation of subject material as VENM must be undertaken by a suitable qualified Environmental Consultant of Geotechnical Engineer. A NSW EPA VENM certificate must be filled-out to accompany subject material to detail the determination as VENM (refer to **APPENDIX D:** for a template VENM certification form).

For VENM Classification of excavated material as VENM requires certainty that all aspects of the definition are met. Chemical testing may be required to ascertain whether an excavated material is contaminated with manufactured chemicals or process residues, or whether it contains sulfidic ores or soils. VENM is also considered a waste that has been pre-classified as GSW (non-putrescible) for the option of straight disposal.

11.1.2 Beneficial reuse offsite as ENM

Where it can be demonstrated that a specific type of waste can safely be used for another purpose, rather than being disposed of in accordance with the Waste Guidelines, NSW EPA may grant permission for that waste to be used for the specified purpose, subject to strict conditions.

The Resource Recovery Order under Part 9, Clause 93 of the Protection of the Environment Operations (Waste) Regulation 2014 - the excavated natural material order 2014 (ENM Order) applies to ENM only. In this order, ENM means naturally occurring rock and soil (including but not limited to materials such as sandstone, shale, clay and soil) that has:

- been excavated from the ground; and
- contains at least 98% (by weight) natural material.

Stockpile sampling for ENM requirements must be undertaken in accordance with Australian Standard 1141.3.1–2012 Methods for sampling and testing aggregates (or equivalent), with collection of the number of samples listed in **Table 11:** .

Table 11: ENM sampling for stockpiled material

Quantity (*ex-situ* tonnes)	Number of Samples
< 500	3
500 – 1,000	4
1,000 – 2,000	5
2,000 – 3,000	7
3,000 – 4,000	10

Systematic *in-situ* sampling at the surface can be undertaken using a minimum sampling frequency based upon the diameter of the hot spot that can be detected with 95% confidence (m) in accordance with the NSW EPA (1995) *Sample Design Guidelines* (NSW EPA, 1995). The minimum sampling points required for characterisation of an area is detailed in **Table 12:** .

Table 12: ENM sampling for in situ material

Size of Area (m^2)	Number of Sample Points	Distance between two sampling points (m)	Diameter of the hot spot that can be detected with 95% confidence (m)
500	5	10.0	11.8
1,000	6	12.9	15.2
2,000	7	16.9	19.9

For *in-situ* sampling at depth to one sample must be collected at 1.00 mBGL, followed by one sample point every 0.5 m interval thereafter, and followed by one sample point at the base of the excavation.

The chemical concentration or other attribute of any sample collected and tested as part of the characterisation for ENM must not exceed the absolute maximum concentration or other value listed in **Table 13:** .

Table 13: ENM chemical and material requirements

Chemical	Maximum average concentration for characterisation	Absolute maximum concentration
	mg/kg 'dry weight' unless otherwise specified	mg/kg 'dry weight' unless otherwise specified
Mercury	0.5	1
Cadmium	0.5	1
Lead	50	100
Arsenic	20	40
Chromium (total)	75	150
Copper	100	200
Nickel	30	60
Zinc	150	300
Electrical conductivity	1.5 dS/m	3 dS/m
pH	5 – 9	4.5 – 10
Total PAH	20	40
Benzo(a)pyrene	0.5	1
Benzene	N/A	0.5
Toluene	N/A	65
Ethylbenzene	N/A	25

Chemical	Maximum average concentration for characterisation	Absolute maximum concentration
	mg/kg 'dry weight' unless otherwise specified	mg/kg 'dry weight' unless otherwise specified
Xylenes (total)	N/A	15
Total Petroleum Hydrocarbons C_{10} – C_{36}	250	500
Rubber, plastic, bitumen, paper, cloth, paint and wood	0.05 %	0.1 %

Notes:

3. Totals expressed as mg/kg on a dry weight basis
4. N/A - not applicable as classification based on total concentration (TC)
5. dS/m – Decisemens per metre

11.2 Disposal to landfill

11.2.1 Classification

In accordance with the Waste Guidel*ines* soils requiring offsite disposal from a site have to be classified as either:

- General solid waste (GSW); or
- Restricted solid waste (RSW); or
- Hazardous waste (HAZ); or
- Special waste (for instances where asbestos is present).

Where results were reported below the laboratory limit of reporting (<LOR), the LOR value should be substituted as the concentration to apply a level of conservatism for statistical appraisal. The Waste Guidelines initially require analytical results for contaminants to be compared to the following contaminant threshold (CT) total concentrations for classification:

- value < CT1 = GSW.
- value > CT1, but below CT2 = RSW.
- value > CT2 = HAZ.

If the total concentration for a contaminant exceeds the CT1 or CT2 threshold, the potential leachability of the contaminant (using the toxicity characteristic leaching procedure – TCLP) can be used in conjunction with the specific contaminant concentrations (SCC) to derive a waste classification with regard to potential leachate risk:

- value < SCC1 / TCLP1 = GSW.

- value > SCC1 / TCLP1 but below SCC2 / TCLP2 = RSW.
- value > SCC2 / TCLP2 = HAZ.

The process of classification requires that should any one analyte exceed the GSW criteria (but remain beneath the RSW criteria) then the waste would be classified as RSW. Conversely, if all analytes are below the general solid waste criteria then the waste can be classified as GSW.

Statistical appraisal can be undertaken to assist the derivation of a waste classification in accordance with the Waste Guidelines. Statistical values derived to aid classification can include:

- Maximum, minimum and mean.
- Coefficient of variation;
- Standard deviation.
- 95% upper confidence limit (UCL) of the arithmetic mean (95% UCL).

11.2.2 Sampling frequency

The minimum number of samples recommended by ASC NEPM (2013) for characterisation of stockpiles up to 200 cubic metres (m^3) comprising similar materials is one sample per 25 m^3 of material. A greater number of samples may be required if there is a large range in contaminant concentrations or soil types.

If soil is characterised using the 95% upper confidence limit (UCL) of the arithmetic mean, ASC NEPM (2013) allows collection of fewer samples and defers to the Victorian EPA (2009) - *Environment Protection (Industrial Waste Resource) Regulations 2009* (Publication IWRG702). Recommended minimum sampling frequencies for waste classification are summarised in **Table 14:** .

If only the minimum number of samples is collected and there is a large range in contaminant concentration, then either the maximum concentration should be assumed for disposal purposes or additional samples collected and analysed and the situation re-evaluated.

Table 14: Sample frequency for chemical characterisation

Stockpile Quantity (m^3)	Number of Samples
< 75	3 [1]
75 – <100	4 [1]
100 – < 125	5 [1]
125 – < 150	6 [1]
150 – < 175	7 [1]
175 – < 200	8 [1]
300 – 2,500	10 [2]
3,000	12 [2]
4,000	16 [2]
4,500	18 [2]
5,000	20 [2]
> 5,000	20 [2] (then 1: 250 m^3)

Notes:

1. Minimum number of samples for stockpiles 200 m^3 or less (based upon 1:25 m^3) (NEPM, 2013)
2. Minimum number of samples to provide a sufficient amount of data to calculate the 95%UCLaverage (Vic EPA, 2009 IRWG 702).

11.2.3 Criteria

The waste classification chemical criteria for the selection of contaminants is presented below:

- Total concentration CT only (**Table 15:**); and
- SCC with TCLP testing (**Table 16:**).

Table 15: Waste disposal criteria without TCLP – Contaminant Threshold

Chemical	Maximum values of total concentration for classification without TCLP	
	General Solid waste (CT1)	Restricted Solid Waste (CT2)
	Total Concentration	Total Concentration
Arsenic	100	400
Benzene	10	40
Benzo(a)pyrene	0.8	3.2
Cadmium	20	80
Chromium (VI)	100	400
Carbon tetrachloride	10	40
Chloroform	120	480
Chlorpyrifos	4	16
Ethyl-benzene	600	2,400
Endosulfan	60	240
Lead	100	400
Mercury	4	16
Nickel	40	160
PAHs (total)	200	800
Phenol (non-halogenated)	288	1,152
Polychlorinated biphenyls9	<50	<50
Scheduled chemicals	<50	<50
Styrene (vinyl benzene)	60	240
TPH fraction (C6 – C9)	650	2,600
TPH fraction (C10 – C36)	10,000	40,000
Toluene	288	1,152
Xylenes (total)	1,000	4,000
1,1-Dichloroethylene	14	56
1,1,1,2-Tetrachloroethane	200	800
1,1,2,2-Tetrachloroethane	26	104
1,1,1-Trichloroethane	600	2,400
Tetrachloroethylene (PCE)	14	56
Trichloroethylene	10	40
Vinyl chloride	4	16
Moderately harmful pesticides (total)	250	1,000

Notes:

1. Totals expressed as mg/kg on a dry weight basis;
2. N/A - not applicable as classification based on total concentration (TC).
3. Where waste classifications exceed the restricted solid waste criteria, the waste is classified as hazardous.

Table 16: Waste disposal criteria with TCLP

Chemical	Maximum values for leachable concentration and total concentration when used together			
	General Solid waste		Restricted Solid Waste	
	Total	TCLP	Total	TCLP
Arsenic	500	5	2,000	20
Benzene	18	0.5	72	2
Benzo(a)pyrene	10	0.04	23	0.16
Cadmium	100	1	400	4
Chromium (VI)	1,900	5	7,600	20
Carbon tetrachloride	18	0.5	72	2
Chloroform	216	6	864	24
Chlorpyrifos	7.5	0.2	30	0.
Ethyl-benzene	1,080	30	4,320	120
Endosulfan	108	3	432	12
Lead	1,500	5	6,000	20
Mercury	50	0.2	200	0.8
Nickel	1,050	2	4,200	8
PAHs (total)	200	N/A	800	N/A
Phenol (non-halogenated)	518	14.4	2,073	57.6
Polychlorinated biphenyls	<50	----	<50	----
Scheduled chemicals	<50	----	<50	----
Styrene (vinyl benzene)	108	3	432	12
TPH fraction (C_6 – C_9)	650	N/A	2,600	N/A
TPH fraction (C_{10} – C_{36})	10,000	N/A	40,000	N/A
Toluene	510	14.4	2,073	57.6
Xylenes (total)	1,800	50	7,200	200
1,1,1,2-Tetrachloroethane	360	10	1,440	40
1,1,2,2-Tetrachloroethane	46.8	1.3	187.2	5.2
1,1,1-Trichloroethane	1,080	30	4,320	120
Tetrachloroethylene (PCE)	25.2	0.7	100.8	2.8
Trichloroethylene (TCE)	18	0.5	72	2
Vinyl chloride	7.2	0.2	28.8	0.8
Moderately harmful pesticides (total)	250	----	1,000	----

Notes:

1. Totals expressed as mg/kg, TCLP as mg/L;
2. N/A not applicable as classification based on total concentration (TC).
3. Where waste classifications exceed the restricted solid waste criteria, the waste is classified as hazardous.

11.2.4 Reporting

Once a waste classification is derived advice must be prepared to detail:

- General material description.
- Material volume subject to classification.
- Laboratory results with comparison to criteria in the Waste Guidelines.
- Concluding statement of waste classification for subject material.

An application must then be submitted to the selected landfill / disposal site based upon the waste classification advice. On receipt of approval from the landfill / disposal site that subject material is suitable, it can then be transported offsite in haulage vehicles appropriately designed and licensed to transport specific classes of waste soil.

NO SUBJECT WASTE MATERIAL IS TO BE REMOVED FROM SITE PRIOR TO OBTAINING APPROPRIATE CLASSIFICATION ADVICE.

NO SUBJECT MATERIAL IS TO BE TRANSPORTED FROM SITE PRIOR TO RECEIVING ACCEPTANCE FROM THE RECEIVING FACILITY.

12 VALIDATION METHODOLOGY

12.1 Soil assessment

12.1.1 Field assessment

Field descriptions during all soil validation works should be undertaken by a qualified environmental consultant / engineer, and recorded on detailed material logs that describing soil characteristics such as:

- Lithology / material type;
- Colour;
- Texture;
- Moisture content (dry, moist, wet);
- Inclusions and approximate proportions;
- Indications of visual and/or olfactory contamination (if notable).

Soil gas headspace readings should be collected in the field for representative material using a calibrated photo-ionisation detector (PID) meter, which will provide an indication of presence of volatile organic compounds (VOCs) in soil.

12.1.2 Sampling

Validation soil samples can either be collected by hand, using manual tools (e.g. shovel / trowel) or by mechanical means (e.g. from bucket of excavator). In either scenario the representative sample must be collected by exposing a fresh face of material prior to assessment and sampling.

Samples should be collected ensuring that a fresh pair of nitrile gloves are used for each sample to minimise potential for cross contamination. Selection of samples for laboratory analyses will be based upon visual / olfactory indications of contamination and associated PID head space sample results. Samples for chemical analyses must be placed directly into laboratory supplied clean jars and placed immediately into a chilled esky. Samples must then be transported to the respective laboratory under full chain-of-custody documentation.

For field quality control / quality assurance (QA/QC) purposes intra-laboratory and inter-laboratory duplicate samples should be collected at a rate of 1:20 primary samples. For laboratory QA/QC purposes a trip spike / trip blank pair should be included within the esky and analysed along with the primary samples as a measure of potential loss/ gain of volatile compounds and cross-contamination through transportation.

12.2 Validation rationale

12.2.1 Walls of UST pit excavation

The two identified USTs are relatively small (~5,000 L each) and were noted to installed within sandy bedding material (Environmental Earth Sciences, 2019a). The extents of the bedding material were not completely delineated during investigation, however the base depth of the tank pit is likely to proceed past ~2.40 mBGL (Environmental Earth Sciences, 2019a).

Fill material on the edges of the tank pit excavation extended to a maximum of 1.20 mBGL. Validation wall samples will be collected on each wall of the tank pit at nominal depth intervals of 0.50 m down the profile until the base is reached.

Wall validation sampling should be conducted as a minimum every 5 linear meters along the walls ensuring to collect samples of each encountered material (i.e. fill and natural) from each wall.

12.2.2 Base of UST pit excavation

In accordance with NSW DECCW (2010) - *UPSS Technical Note: Site Validation Reporting*, one validation sample will be collected from the tank pit base in the areas directly underlying each UST.

As impacted water was noted within the bedding sands it is recommended to excavated material underlying the bedding sands to an additional depth of 0.20 - 0.50 m. Field screening should be used as a qualitative assessment to determine if further excavation beyond an additional 0.50 m is require. As a guide, a PID reading of < 50 ppm is potentially indicative of sufficient excavation however, it is noted this can only be confirmed via laboratory analysis.

12.2.3 Confirmatory UST pit wall assessment

In accordance with NSW DECCW (2010b) - *UPSS Technical Note: Site Validation Reporting*, it is not considered appropriate to assess only the base and walls of the tank pit. It is therefore recommended to assess material behind each tank pit wall (approximately one metre past each delineated wall). This is recommended to be undertaken by advancing test pits to the depth of the tank pit and collection of validations samples from both fill (if encountered) and natural material layers.

A natural material sample should be collected commensurate with the identified water strike from Environmental Earth Sciences (2019a) of ~2.00 mBGL to assess for potential of horizontal migration via perched water.

12.2.4 Stockpiles

As stockpiles have been identified as containing elevated concentrations of heavy metals and PAHs, following removal of either onsite reuse (where suitable) or offsite disposal, samples should be collected from the surface within the stockpile footprint. These samples are considered necessary to determine if leaching of contaminants to the underlying surface has occurred such that it may not be suitable to remain onsite. Sampling frequency will be undertaken as per requirements detailed in **Table 12:** .

12.3 Asbestos

As bonded ACM fragments have been noted in several stockpiles as well as in the immediate vicinity of the former Army compound and Transmission Building, following remediation a visual inspection and associated clearance certificate should be issued to certify that no visual asbestos impact remains. Refer to the Asbestos Management Plan (AMP) guidance (Section 13) for details on asbestos sampling and monitoring.

13 ASBESTOS MANAGEMENT PLAN

Asbestos has been identified in bonded ACM form within onsite buildings and structures as well as bonded ACM impacted to soils surrounding buildings and structures and within various stockpiles. Asbestos fines (AF) or friable asbestos (FA) have not been noted within investigations completed (Environmental Earth Sciences, 2019a and 2019b) however, given the age of the buildings there is potential for these to be uncovered. The following subsections detail establishment of exclusion zone and associated management for mitigating potential airborne asbestos fibres.

13.1 Management and control of asbestos risk

Prior to commencement of work, all persons involved in the work shall be inducted onto the appropriate safe work method statement (SWMS) and/or job specific risk assessment (JSRA) which covers:

- Potential health risk associated with asbestos contaminants.
- Control measures used to minimise the risk to health and safety.
- Correct use of methods used to minimise the contamination of employees, other persons and the workplace.
- Correct care and use of personal protective equipment.
- Records of induction shall be maintained by the Construction Project Manager (CPM).

13.2 Establishment of exclusion zone

The area and immediate vicinity where asbestos has been identified will be a zone of specific management and will be referred to as the Exclusion Zone(s). This zone will require specific management and controls that are detailed in this section. Any Exclusion Zones should be constructed to incorporate both the:

- Reported area of asbestos occurrence around buildings/ structures; and
- Any areas of asbestos discovered as an unexpected finding.

The footprint of the recommended Exclusion Zone should extend to the shallow (~0.1 mBGL) subsurface, as there is potential for fragments to have been buried over time. The Exclusion Zone should be clearly demarcated using fencing and/or signage (where practicable) during proposed construction works. Ensure that there is minimal disturbance of the asbestos until the asbestos management procedures have been implemented. Warning signs are to be erected at the boundary to the Exclusion Zone for the duration of the works, including overnight or over weekends if the removal work has not been completed.

SafeWork NSW's Code of Practice "How to Safely Remove Asbestos" (2019a) provides additional information on signage, with examples similar to the following recommended:





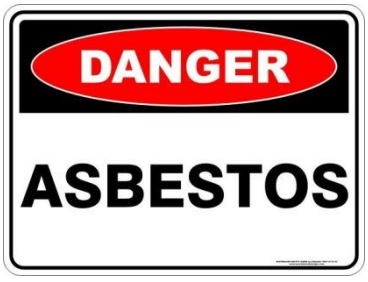

The Exclusion Zone around the site includes secure barriers (by way of enclosed structures and / or fencing) that both secures the site from the general public and inhibits the dispersion of dust from within the site to the outer environment.

13.3 PPE measures and determination

The minimum PPE requirements required for the generic scenario are detailed in **Table 17:** , with generic scenarios and examples listed below:

- Stage 1 measures – low-level non-friable ACM risk work outside of any exclusion zone:
  - setup exclusion zones.
  - inspection of surface prior to excavation.
- Stage 2 measures – high-level risk work involving non-friable ACM:
  - demolition of bonded ACM structures.
  - emu picking, disturbing bonded ACM fragments.
  - excavation of impacted material.
- Stage 3 measures – high-level risk work involving AF / FA and wet decontamination.
  - any work where poor-condition (FA) bonded ACM fragments are observed.

Table 17: PPE Minimum requirements

PPE Item	Stage 1 PPE	Stage 2 PPE	Stage 3 PPE
Steel capped safety boots / steel capped gum boots	**YES**	**YES**	**YES**
Safety hard hat	**YES**	**YES**	**YES**
High-visibility long sleeves / long pants	**YES**	**YES**	**YES**
Disposable boot covers	no	**YES**	**YES**
Disposable gloves	no	**YES**	**YES**
Disposable half-face particulate respirator (P2 rated)	no	**YES**	**YES**
Half-face particulate respirator (P3 rated)	no	no	**YES**
Disposable coveralls	no	**YES**	**YES**
Wet decontamination measures	no	no	**YES**

Within any Exclusion Zone, based on visual observations and validation testing, if the Licensed Asbestos Assessor (LAA) is satisfied that the risk of encountering AF / FA material has been sufficiently reduced, the requirement to remain at Stage 3 measures or de-escalate to Stage 1 or 2 measures may be reconsidered.

13.4 Inventory of PPE

The following is an inventory of personal protective equipment (PPE) required for the project, with certain items only requiring implementation in higher risk work:

- Steel capped safety boots / steel capped gum boots;
- High visibility long sleeves / long pants;
- Disposable gloves;
- Disposable boot cover;
- Safety hard hat;
- Disposable coveralls (type 5, category 3 (EN ISO 13982–1) or equivalent would meet this standard) (if required);
- Coveralls worn should be made from either 100% synthetic material or a mixed natural / synthetic fabric capable of providing adequate protection against fibre penetration. All fabrics must be capable of preventing the penetration of asbestos fibres down to a diameter of 0.5 µm and to a maximum 1% penetration of all airborne asbestos fibres. Once worn, disposable overalls are not to be reused or laundered;
- Disposable half-face particulate respirator (P2 rated). The respirator must conform to the requirements of AS/NZS 1716:2009 - *Selection, Use and Maintenance of Respiratory Protective Devices* or its equivalent. These disposable respirators must be replaced at each decontamination event;
- Half-face P3 rated particulate respirator cartridge conforming to the requirements of AS/NZS 1716:2009 - *Selection, Use and Maintenance of Respiratory Protective Devices* or its equivalent.

NOTE - all disposable PPE will be disposed of as asbestos waste at the completion the removal works.

13.5 Structure and responsibility

13.5.1 Construction project manager

The CPM will delegate responsibility for specific works to appointed subcontractors. The CPM will:

- Ensure that all construction activities on site comply with all relevant environmental obligations and that the site operates in compliance with statutory regulations.
- Commissions 'Class A'/ 'Class B' asbestos removal contractor, who would then be responsible for preparation of ARCP.
- Verify that the AMP is adequate in scope, understood by all site/construction staff and executed in an appropriate manner.
- Administer the environmental controls outlined in this AMP.
- Liaise with relevant statutory authorities and ensure that environmental testing and reporting requirements are met.
- Make certain that all persons involved in on-site activities are aware of the SWMP and its provisions.
- Prepare contingency plans or actions for environmental incidents or non-compliance with the AMP.

In addition, the CPM will be responsible for certifying the that works have been carried out in accordance with the AMP and provide an induction for all site personnel which will include a list of environmental responsibilities and management procedures.

13.5.2 Licensed asbestos removalist (LAR)

The licensed asbestos removalist (LAR) as appointed by the CPM will:

- Prepare ARCP;
- Ensure the AMP and ARCP are implemented and adhered to in an appropriate manner by all Contractor's staff;
- Ensure all waste is appropriately tracked via NSW EPA WasteLocate;
- Maintain and make available copies of all waste consignment details and waste dockets from receiving facilities;
- Ensure no demolition works are undertaken without appropriate controls (i.e. dust suppression, air monitoring etc) in place; and
- Ensure equipment/ plant is decontaminated appropriately prior to leaving the Exclusion Zone.

- Maintaining appropriate SafeWork NSW licenses for asbestos removal and adhering to all relevant guidelines, codes and practice notes relating to the removal of asbestos.

13.5.3 Licensed Asbestos Assessor (LAA) / competent person

The Licenced Asbestos Assessor (LAA) competent person will report directly to the CPM to ensure appropriate management of asbestos in compliance with this AMP. The LAA will undertake air monitoring, full-time supervision of the asbestos remediation works, visual clearance inspections of remediated areas and provide clearance certificates after approval for an area has been given. This includes:

- attending site for prestart/ toolbox talks;
- setting up air monitoring equipment prior to the commencement of works;
- retrieving air monitors at the completion of daily works;
- conducting staged clearance inspections; and
- supervising the removal works to ensure asbestos removal is in accordance with the guidelines.

The LAA/ Environmental Consultant must provide independent verification of the LAR contractor's work practices, implemented controls and standards employed during removal operations.

Supervision by the LAA/ Environmental Consultant will be carried out during any removal works to ensure the works are undertaken in accordance with relevant codes of practice, guidelines and have been completed to a satisfactory standard. The LAA/ Environmental Consultant supervising the removal works must attend all prestart meetings / toolbox talks and ensure all employees working within the area are aware of any safety matters regarding asbestos and/or any asbestos-related works being undertaken in the area.

Where 'Class A' removal is being undertaken (i.e. removal of AF/ FA) only a LAA can provide a clearance certificate. A 'competent person' (i.e. suitably experienced Environmental Consultant) can provide clearance certificates for 'Class B' removal such as removal of > 10 m^2 of bonded ACM.

13.6 Asbestos removal

13.6.1 General

Any asbestos removal works must be performed in accordance with all legislative requirements. The statutory requirements for asbestos removal are prescribed in the *Section 274* of the WHS Act. The following procedure will be adopted where removal of asbestos material is undertaken:

- All contractors are to ensure that they have the correct PPE for the asbestos removal task, including appropriate handling gloves, P2/ P3 respirators and disposable

overalls (all PPE to be sealed in a bag with contaminated material and removed and disposed appropriately).

- Prior to works commencing the SWMS / JSRA shall be reviewed by the CPM.
- The area shall be isolated and barricaded prior to removal works commencing and signage erected.
- Only appropriate licensed and competent contractors will remove/dispose of ACM. In the case of AF / FA, only a SafeWork NSW 'Class A' licensed asbestos removalist may undertake these works. Qualifications of the individuals are to be obtained and checked prior to any removal work commencing.
- The preferred SafeWork NSW 'Class A' licensed asbestos removalist to provide a detailed Asbestos Removal Control Plan (ARCP) for the intended works for review by the CPM prior to commencement.
- All hazardous materials, including PPE, will be sent to a licensed facility as soon as possible with full waste transfer traceability.
- All vehicles and equipment which have (or potentially have) come into contact with asbestos materials will be cleaned down in a designated decontamination area prior to exiting the work zone.
- The waste shall be tracked (i.e. NSW EPA *WasteLocate*) and disposed of at a landfill carrying a license appropriate for the type of waste needed to be disposed of. In accordance with NSW legislation the waste class (type of waste) shall be predetermined through testing prior to disposal. To demonstrate proof of appropriate disposal, copies of waste disposal receipts are to be kept for inspection by SafeWork NSW, NSW EPA, the local council or project team.

Important:

Both the owner of the waste and the transporter are legally responsible for tracking the waste and proving the waste was transported to a facility licensed to accept such waste.

13.6.2 Licensed asbestos removalist

In accordance with the following codes of practice all friable asbestos works are to be undertaken by a licensed 'Class A' asbestos removal contractor (i.e., a contractor holding a business certificate for the prescribed activity of friable or bonded asbestos removal):

- SafeWork NSW (2019a) - How to Safely Remove Asbestos Code of Practice;
- SafeWork NSW (2019b) - How to Manage and Control Asbestos in the Workplace; and
- WorkCover NSW (2014) - Managing Asbestos in or on Soil.

A 'Class B' licensed asbestos removalist can only undertake works involving bonded (non-friable) asbestos. All asbestos removal works must be undertaken using the following mandatory controls:

- delineated asbestos removal work area;
- appropriate PPE;
- suppression techniques (wet and dry);
- decontamination procedures (wet and dry).

Asbestos abatement works must be performed in accordance with all legislative requirements. The statutory requirements for asbestos removal are prescribed in *Section 274* of the WHS Act.

Prior to commencing works the asbestos removalist must ensure consultation with any people who may be affected by the removal works has occurred. The licensed asbestos contractor must also prepare an Asbestos Removal Control Plan (ARCP) and a SWMS. Details of these are included in the following subsections.

13.6.3 Safe Work Method Statement

The LAR must prepare a SWMS to detail the proposed work methodologies that will be used in order to safely and effectively remove, enclose or encapsulate the asbestos-impacted material (in-line with this AMP). The SWMS should be submitted to the CPM, Environment and WH&S representatives and the LAA / competent person for review and approval prior to commencing asbestos removal works.

13.6.4 Asbestos Removal Control Plan (ARCP)

An ARCP is to be developed by the licensed asbestos removalist prior to undertaking any asbestos removal works. The ARCP must identify the specific control measures a license holder will install to ensure workers and other persons are not at risk when asbestos removal work is being conducted.

An ARCP helps ensure the asbestos removal is well planned and undertaken in a safe manner. The ARCP must be prepared before the licensed asbestos removal work commences and include but are not limited to details of:

- How the asbestos removal will be carried out, including the method, tools, equipment and PPE to be used.
- The asbestos to be removed, including the location, type and condition of the asbestos.
- Decontamination procedures and waste disposal.

Please refer to the example Asbestos Removal Control Plan Contents (*Appendix A* within SafeWork NSW (2019a) code of practice for the full list of contents required in an ARCP.

13.6.5 Clearance inspection

After any removal / remediation works have been completed, the area must be inspected to ensure all asbestos materials have been removed to a satisfactory standard. The process for validation should be as follows:

- LAA / competent person to conduct visual inspection / collect clearance soil samples.
- LAA to carry out clearance air monitoring.
- LAA / competent person to conduct clearance that all equipment has been decontaminated.

13.6.6 Clearance report

The visual clearance inspection of the work area should be carried out when the LAA considers that removal works have been satisfactorily completed. Inspections are to be carried out with the asbestos removal contractor in order to confirm appropriate clearance or note areas which require further attention.

An analytical program will be carried out in residual soil surfaces to validate appropriate removal has taken place. This will involve collecting residual soil samples of the appropriate surfaces within excavations / soil removal area and submitting the samples to a NATA accredited laboratory.

In the case of a positive analytical result for asbestos in areas not previously detected, further delineation or removal works may be required.

A Clearance Certificate will be issued to certify that works have been completed satisfactorily and it is safe to resume normal operations. The asbestos removal contractor will provide all waste transfer dockets for all material removed from the works. All results, reporting and Clearance Certificates are to be forwarded directly to the CPM as soon as practical.

13.7 Notifications for any asbestos removal work

The procedures for notification of asbestos removal works are detailed below:

- The LAR contractor must give a minimum five (5) days' notice to SafeWork NSW regarding the removal of either 'Class A' or 'Class B' ensuring to provide all necessary information depending on the type of removal. Further detail on requirements for notification are provided in Section 3.6 of SafeWork NSW (2019a) code of practice.
- The CPM must consult with persons affected by the excavation works, including where necessary speaking with offsite stakeholders. Further guidance can be sort from the Safe Work Australia (2011) - Code of Practice: Work Health and Safety Consultant, Cooperation and Coordination.
- The asbestos contractor must ensure that this consultation has occurred prior to commencing works. Copies of all relevant licenses and plans must be onsite prior to commencing and at all times during scheduled removal.

13.8 Plant and machinery

When excavation plant is used within the Exclusion Zone, suitable cab filters (HEPA, Class H filters) should be used for air protection. It may be necessary to consider a machinery parking area within the Exclusion Zone. Plant or machinery exiting the Exclusion Zone should be decontaminated prior to exit as outlined in the ARCP.

13.9 Airborne Fibre monitoring

As AF/ FA have not been identified, airborne fibre monitoring is not mandatory however given the volume of material to be removed during demolition it is recommended to undertake daily airborne fibre monitoring until the asbestos hazard is satisfactorily mitigated.

If AF / FA are encountered, only an LAA may set-up a minimum of four static or positional asbestos fibre monitoring pumps (with placement pending prevailing wind conditions and with consideration to residences, site offices or other such sensitive receptors). Air monitoring is recommended for any asbestos removal works. Air monitoring samples are recommended to be collected daily and analysed by a NATA accredited laboratory.

For the purposes of monitoring airborne asbestos fibres, only respirable asbestos fibres (those fibres less than 3 µm wide, more than 5 µm long and with a length to width ratio of more than 3:1) are counted.

Air monitoring reports are to be provided as far as practicable within 4 hours of air monitoring pump collection. Satisfactory asbestos air monitoring results are those that measure < 0.01 fibres/mL by a NATA accredited laboratory.

The Code of Practice for the Safe Removal of Asbestos [NOHSC:2002(2005)] provides additional information on control levels. It is recommended that results of air monitoring are displayed on the site's safety notice board for a period of 24-hours. Concentrations of asbestos fibres shall be managed by actions detailed in **Table 18:** . Should air monitoring results report higher concentrations of airborne asbestos fibres, control measures are not considered satisfactory and will trigger more sensitive control measures.

Table 18: Airborne Asbestos fibre management

Action Level (airborne asbestos fibres/ml)	Work method
Less than 0.01	• Continue with control measures
Between 0.01 and 0.02	• Review control measures • Investigate the cause • Implement new controls to prevent further release
More than 0.02	• Immediately cease works • The Licensed Asbestos Contractor to notify the relevant regulator that work has ceased using the notification of respirable fibre levels form WC03589 • Investigate the cause • Extend the isolation area and implement controls to minimise further exposure; and • Do not recommence work until fibre levels are at or below 0.01 fibres/ml.

13.10 Decontamination procedures

13.10.1 Cleaning

After completion of removal works personnel must undertake the following decontamination procedures if they have been involved in removal of asbestos:

- Remove and dispose of all PPE appropriately.
- Wash hands, face and exposed skin areas.
- All machines, tools and equipment are to be decontaminated. All cleaning wipes, materials or water must be disposed of as asbestos waste.

13.10.2 Disposal of PPE

Following removal works, all PPE must be disposed of using the procedures listed below:

- All disposable suits and respirators are to be placed in asbestos waste bags (200 µm thick polyethylene bags) after each decontamination process.
- PPE, excluding respirators, will be removed from the workers person inside the designated decontamination zone.
- Bags should be twisted tightly, folded over and the neck secured in the folded position with adhesive tape, or any other effective method.
- These waste bags should not be used for other waste and should be removed from the work zone and placed in a designated and signposted asbestos waste bin.

- The asbestos waste bags should be disposed of by a licensed asbestos contractor and transported to a licensed waste depot approved to accept asbestos contaminated waste.

- The contractor should have a documented procedure outlined in the SWMS to ensure the vehicles are adequately cleaned and checked prior to leaving the site and landfill.

- Disposal permit(s) or certificates should be sought from the landfill or waste transfer station at the end of the disposal operation. This documentation should be filed with all relevant asbestos documentation for the project, and a copy forwarded to the Consultant Hygienist and the CPM.

13.10.3 Vehicle decontamination

No contaminated vehicle or equipment may leave the Exclusion Zone. Vehicles will not traffic between the Exclusion Zone and other areas / off site until passing satisfactorily through a decontamination area where vehicles and equipment can the washed down. These procedures will be extrapolated in an ARCP.

13.10.4 General waste disposal

All bonded (non-friable) asbestos waste generated on site will be placed in a designated and signposted waste bin. The waste bin will be lined with black 200 µm plastic lining prior to asbestos waste being placed inside. The waste bin will be placed in a secure area and locked outside of working hours.

In the case where asbestos waste is placed in bags, the waste shall be double bagged prior to its removal from the work zone using 200 µm thick polyethylene bags. Asbestos waste shall be bagged once at the workface and a second time away from the workface but prior to leaving the removal area enclosure.

It is recommended that a maximum bag size of 1200 millimetres (length) x 900 millimetres (width) be used. Bags should be filled to no more than 50 percent capacity, and contents should be wet before sealing. Consistent with good manual handling practice, bags should not exceed 16 kilograms in weight.

The disposal of any asbestos materials / products off site will be in accordance with the NSW EPA (2014) – *Waste Classification Guidelines*. Transport and final disposal of asbestos waste material shall be carried out in a manner that will prevent the liberation of asbestos dust to the atmosphere by appropriate licensed contractors. All asbestos waste material shall be disposed of at a licensed landfill approved to accept asbestos contaminated waste and, in a manner, approved by the local and state authorities. All asbestos waste shall be tracked from the source site to the disposal site.

13.10.5 AF / FA Waste Disposal

It is recommended that if AF / FA impacted material is identified, it should be loaded directly onto trucks that can be environmentally sealed with “Enviro-tarp” or equivalent for transport and disposal at a facility licensed to accept the type and concentrations of waste reported.

These procedures should be adequately delineated in the 'Class A' licensed asbestos removalist's ARCP and reviewed prior to commencement of remediation works.

13.11 Reporting requirements

The CPM will be responsible for record keeping. The items kept as environmental management records include (as outlined in the following tables):

- Incident reports.
- Council correspondence.
- Complaints register.
- Staff training.
- Records of environmental issues and/or incident reports.

All records will be retained and will be available to Council, SafeWork NSW, NSW EPA or other regulatory authority upon request.

13.12 Environmental training

The CPM and construction team personnel should be trained in a variety of procedures before commencing work at the site. Training to consider might include, but not limit, safety for team members, the community, and the environment. Training should be undertaken in the form of an over-arching site induction and at daily toolbox talks. The following training is recommended to be undertaken at a minimum, with all records maintained:

- Identification of potential construction hazards to the environment and public / private amenity.
- Identification of ecological impact from discharge of sediment-laden waters.
- Identification of potential health considerations of dust generation.
- Environmental management roles and responsibilities.

13.13 Emergency contacts & response

The point of contact for emergencies for construction and/or of an environmental nature during construction works is the CPM.

13.14 Incident reporting

The CPM will be responsible for reporting any environmental incidents that take place during the construction works at the site. An incident report form should normally be completed within 24-hours of the incident occurring. The CPM will also be responsible for notifying any relevant regulatory bodies, if required (e.g. SafeWork NSW, Council, NSW EPA).

Following any environmental incident, corrective action and/or remediation of impacts (if any) should be implemented and the outcomes also reported. The cause of the incident should be identified, and this AMP modified accordingly.

13.15 Review, corrective action & continual improvement

Under this AMP, the CPM is to identify opportunities for environmental improvement. The complaints handling process has a performance objective of having zero complaints. If a valid complaint does occur, then the system of review and correction action is to be implemented to alleviate the improper conditions and improve procedures to help ensure the conditions causing the complaint are not repeated. The system of review and corrective action includes:

- The CPM inspecting the locality from where the complaint arose and determine the cause of the complaint (review);
- Appropriate studies being undertaken, and mitigation measures implemented if complaints are repeated (corrective action);
- All environmental action shall be recorded in the relevant register as defined by the CPM and the CEMP amended accordingly (improvement); and
- The complainant being advised of the outcome of the investigation and any action taken.

14 ENVIRONMENTAL CONTROLS

Potential impacts resulting from project works, and the location of the applicable management strategy for soil and water to be implemented for the works on site is included the following subsections. These are components of a soil and water management plan (SWMP) and could be used for information purposes during the preparation of an overarching Construction Environmental Management Plan (CEMP) should this be required.

14.1 Drainage control

The objective is to manage water entering drains, inlets and pits as to no effect the usual stormwater quality via increased sediment loads. This is linked to erosion and sediment control as unmanaged sediments in water will affect drainage and subsequently receiving water bodies.

Construction workers and contractors will operate in accordance with the provisions of the POEO Act, Environmental Planning and Assessment Act 1979 (EPA Act) and Council requirements.

The drainage control plan is detailed in **Table 19:** . Refer to the following SSROC fact sheets (attached in **APPENDIX E:**) for further information relating to sediment control, and diagrams showing suggested methods for establishing engineering controls to mitigate erosion based upon Landcom (2004):

- No.1 – Diversion of Upslope Water;
- No.4 – Excavation Pump-out;
- No.8 – Protected Stockpiles;
- No.9 – Protected wash areas;
- No.12 – Protected Gutter and Stormwater Drains; and
- No.13 – Protection for onsite stormwater pits.

Table 19: Drainage control plan

Actions	Responsible	Timing
Identify the relevant street gutters and drains up slope of the site. Decide on diversion methods and install them.	CPM	Beginning
Street gutters - Install gravel sausage or sandbag barrier(s) immediately up-slope street stormwater gutter(s), down-slope from site. A series of pits might need to be installed to further assist sediment to drop out of solution.	CPM Site workers	Throughout
Existing stormwater entry points in the vicinity of the excavation shall be protected from ingress of materials which may be placed or stockpiled in the vicinity of the excavation.	CPM Site workers	Throughout
Stockpile area - Where practicable construction of earth banks or bunds up-slope of the designated stockpiling area(s) should be implemented.	CPM Site workers	Throughout
If water spraying is required for site dust suppression, care will be taken to control the quantities of water sprayed so that run-off is not generated.	CPM	Throughout
Performance Indicators	**Responsible**	**Timing**
No visible evidence of silt exiting site into stormwater drains or nearby water bodies.	CPM	Throughout
No visible evidence of stockpile erosion particularly following rainfall events.	CPM	Throughout
Lack of complaints / requests for attention by site staff.	CPM	Throughout
Monitoring	**Responsible**	**Timing**
CPM (or delegate) should assess the need for temporary kerb sediment traps. Where required, these should be inspected on a regular basis throughout the day.	CPM Site workers	Throughout
Wash down area - the protected wash area and its sediment controls will need to be emptied of solid residues regularly in order for it to have the capacity to catch and detain waste waters. The larger the area the less often this will need to be done. Solids from this process should be disposed of in a bin or taken to a licensed waste depot.	CPM Site workers	Throughout
CPM (or delegate) shall record details of any erosion onsite and immediately take corrective measures to prevent further such occurrence.	CPM Site workers	Throughout
Reporting	**Responsible**	**Timing**
Erosion / sedimentation issues should be reported to the CPM immediately.	CPM Site workers	Throughout
The CPM should record any incidents in a logbook or form and report on corrective actions taken before the recommencement of site work.	PM	Throughout
Corrective Actions	**Responsible**	**Timing**
Sediment trapped by the down slope controls should be removed regularly to maintain effectiveness. This sediment can be re-stockpiled.	CPM Site workers	Throughout
Investigate the cause of the incident.	CPM	Throughout
Restore control measures prior to the recommencement of site works	CPM	Throughout

14.2 Dewatering control

The objective is to comply with the POEO Act in ensuring that construction activities minimise aesthetic impact, health impact and associated nuisance to surrounding areas from airborne dust.

The control plan for dewatering is detailed in **Table 20:** . Refer to the SSROC Fact Sheet No.4 – *Excavation Pump-out* (attached in **APPENDIX E:**). For further information and diagrams showing suggested methods for establishing engineering for settling muddy water.

Table 20: Dewatering control plan

Actions	Responsible	Timing
Depending on the level of contamination it may be possible to: • Pump it after treatment to the stormwater system; or • Discharge to the sewer under a trade waste agreement (TWA); or • Collection by a liquid waste company for disposal at a licensed treatment facility.	CPM Site workers	Throughout
If water within settling tank is too muddy for discharge into stormwater, flocculants (e.g. gypsum) may be added to drop sediments out of solution. This may raise the pH so consider buffering to drop pH to acceptable ranges (if needed).	CPM Site workers	Throughout
If excavation water is suspected as being contaminated contact a suitably qualified Environmental Consultant and/or the NSW EPA. Testing may be required to ascertain the quality of water prior to making a decision on suitable management.	CPM Environmental consultant	Throughout
Performance Indicators	**Responsible**	**Timing**
No visible evidence of silt exiting site into stormwater drains or nearby water bodies.	CPM	Throughout
If the water contains only sediment it can be pumped to the stormwater system after filtering for Total Suspended Solids (i.e. water with no visible cloudiness).	CPM	Throughout
Water must not be cloudy upon discharge. Flocculants can be used to drop sediments out of solution pending pH is within suitable range for fresh waters (ANZECC / ARMCANZ, 2000).	CPM Site workers	Throughout
Monitoring	**Responsible**	**Timing**
Filtering systems / settlement tanks will need to be monitored regularly to remove sediment from the system to ensure its effectiveness.	CPM	Throughout
Assessment of water in settling tank prior to discharge must be undertaken to ensure that it is comparatively clear.	CPM Site workers	Throughout
If water requires testing for contamination it must meet the criteria for fresh waters in accordance with the ANZECC / ARMCANZ (2000) guidelines.	CPM Environmental consultant	Throughout
Reporting	**Responsible**	**Timing**
Record on a discharge register the physical attributes and volume of all liquids discharged into stormwater.	CPM Site workers	Throughout
Record any information on pH buffering that has been undertaken when flocculants have been used.	CPM Site workers	Throughout
Obtain results of any water quality testing undertaken when water in the settling tank is suspected as being contaminated. Statement on the suitability for management in accordance with ANZECC / ARMCANZ (2000) guidelines for freshwater quality should be obtained.	CPM Environmental consultant	Throughout
Corrective Actions	**Responsible**	**Timing**
Filtering system / settlement tanks will need to be cleaned regularly to remove the sediment that it filters out.	CPM Site workers	Throughout
Settled sediments (sludge) can be reused on site or disposed.	CPM Site workers	Throughout

14.3 Erosion and sediment control

The objective is to manage activities that exacerbate erosion and provide on-site controls that reduce general erosion, sedimentation of drainage lines and natural watercourses and manage potential impact from tracking soil / silt offsite onto public areas and roads.

Construction workers and contractors will operate in accordance with the provisions of the POEO Act, Environmental Planning and Assessment Act 1979 (EPA Act) and Council requirements.

The Erosion and Sediment Control Plan (ESCP) for all works is detailed in **Table 21:** . Refer to the following SSROC fact sheets (attached in **APPENDIX E:**) for further information relating to sediment control, and diagrams showing suggested methods for establishing engineering controls to mitigate erosion based upon Landcom (2004):

- No. 2 – Dust control;
- No. 8 – Protected stockpiles;
- No. 9 – Protected wash areas;
- No. 13 – Protection for onsite stormwater pits; and
- No. 14 – Sediment control.

Table 21: Erosion and sediment control plan

Actions	Responsible	Timing
Diversion of uncontaminated runoff around site works as practicable.	CPM	Beginning
Work site area perimeter sediment fence is to be constructed prior to the commencement of works.	CPM	Beginning
Install temporary sediment trap(s) (e.g. gravel sausages / sandbags) around street stormwater gutters. Existing stormwater entry points in the vicinity of the excavation shall be protected from ingress of materials which may be placed or stockpiled in the vicinity of the excavation.	CPM	Throughout
Stockpiles are to be placed in designated areas which can be appropriately bunded using sediment fences, gravel sausages / sandbags or straw bales on at least the down-slope side.	CPM Site workers	Throughout
Stockpiles intended to remain for extended periods, or during inclement weather are to be covered with suitable covering material and anchored with bricks or similar to prevent exposure of the material.	CPM	Throughout
Dust control measures such as wetting of stockpiles and/or covering of stockpiles to be used where required. If water spraying is required for site dust suppression, care will be taken to control the quantities of water sprayed so that run-off is not generated.	CPM	Throughout
Any silt or mud spilled onto road surfaces or public areas from construction activities should be promptly cleaned.	CPM Site workers Haulage	Throughout
Performance Indicators	**Responsible**	**Timing**
No visible evidence of silt exiting site into drains or nearby water bodies.	CPM	Throughout
No visible evidence of stockpile erosion particularly following rainfall events.	CPM	Throughout
No visible evidence of soil / silt material tracked onto public areas and roads.	CPM	Throughout
Lack of complaints / requests for attention by site staff.	CPM	Throughout
Monitoring	**Responsible**	**Timing**
CPM (or delegate) should assess stockpile conditions daily, ensuring they are covered (if necessary).	CPM Site workers	Throughout
CPM (or delegate) shall record details of any erosion onsite and immediately take corrective measures to prevent further such occurrence.	CPM Site workers	Throughout
CPM (or delegate) shall record details of any erosion onsite and immediately take corrective measures to prevent further such occurrence.	CPM Site workers	Throughout
Reporting	**Responsible**	**Timing**
Erosion / sedimentation issues should be reported to the CPM immediately.	CPM Site workers	Throughout
The CPM should record any incidents in a logbook or form and report on corrective actions taken before the recommencement of site work.	CPM	Throughout
Corrective Actions	**Responsible**	**Timing**
Sediment trapped by the down slope controls should be removed regularly to maintain effectiveness. This sediment can be re-stockpiled.	CPM Site workers	Throughout
Investigate the cause of the incident.	CPM	Throughout
Restore control measures prior to the recommencement of site works	CPM	Throughout

14.4 Dust control

The objective is to comply with the POEO Act in ensuring that construction activities minimise aesthetic impact, health impact and associated nuisance to surrounding areas from airborne dust. Emissions of airborne dust will be managed and potentially monitored for compliance with the National Environmental Protection Council (NEPC) - National Environmental Protection (Ambient Air Quality) Measure 1998 (NEPM, 1998).

The NSW Government states that current health advice has not established a threshold for fine particles below which there are no health effects, instead it has issued the following summary of health effects from total suspended particulates (TSP) to guide authorities:

- 24-hour average of 50 micrograms per cubic metre (µg/m^3) for PM10 (24 hour average) as the interim goal; and
- TSP (PM 2.5 and PM10) annual; average of 90µg/m3.

The dust potential of the site must be assessed to decide on actual dust controls. If there is high risk of dust generation then barriers to divert the wind up and over the site can be considered for construction.

The initial dust control plan for all works is detailed in **Table 22:** . Refer to the SSROC Fact Sheet No.2 – *Dust Control* (attached in **APPENDIX E:**) for further information and diagrams showing suggested methods for establishing engineering controls to suppress generation of dust.

Table 22: Dust control plan

Actions	Responsible	Timing
Appropriate dust control of excavations is to be carried out (such as water spraying). Control of runoff from dust suppression shall be carried out in accordance with measures described in Table 4.	CPM Site workers	Beginning
Cover all materials and stockpiles.	CPM Site workers	Throughout
Minimise the amount of the site that is disturbed at any one time.	CPM Site workers	Throughout
Dampen the site slightly during excavation or when dust is being raised. Be careful not to wet the exposed soil to the point of creating too much runoff.	CPM Site workers	Throughout
Performance Indicators	**Responsible**	**Timing**
Visible airborne dust should not reach neighbouring sensitive receptors (such as residential properties, parks or schools).	CPM	Throughout
Actions arising from justifiable complaints should control the cause sufficiently to avoid further complaints.	CPM	Throughout
Monitoring	**Responsible**	**Timing**
CPM (or delegate) should inspect site and nearby area daily for evidence of dust leaving the site.	CPM	Throughout
Reporting	**Responsible**	**Timing**
CPM (or delegate) to record any incidents and actions to mitigate in a site register.	CPM	Throughout
Details of any complaints should be recorded in a site register.	CPM	Throughout
Corrective Actions	**Responsible**	**Timing**
Inspect, and if required, sweep roads at the end of each day and/or when rain is likely.	CPM Site workers	Throughout
Dust collected around sediment controls will need to be removed regularly to maintain effectiveness. Built up material can be re-stockpiled.	CPM Site workers	Throughout
If complaints are received regarding dust, the frequency of water spraying or dry removal will be increased and recorded in the site register.	CPM	Throughout

14.5 Aboriginal heritage management

Remediation works will be subject to the recommendation of the following aboriginal cultural heritage assessment report:

- Extent Pty Ltd (2019) - *Aboriginal Cultural Heritage Assessment Report, Light Horse Business Hub, Eastern Creek NSW* (SSD 9667). Prepared for Western Sydney Parklands Trust (ref: SYD18198; Version 2; 27 March 2019).

Prior to ground disturbance, an Aboriginal heritage management plan (AHMP) must be developed by a heritage specialist in consultation with the registered aboriginal parties (RAPs) and consent authority to provide the post-approval framework for managing Aboriginal and historical heritage within the study area.

15 SALINITY

Salinity can also reduce water quality, threaten fauna and result in the degradation of vegetation and soils, including the loss of productive agricultural land. Salinity occurs when salts, naturally found in soil or groundwater, rise and concentrate at the ground's surface. This is due to changes in the natural water cycle caused by such activities as vegetation removal and replacement with shallow rooted, high water using plants, concentrated stormwater flows, leaking underground water pipes, and over watering of parks and gardens.

This section seeks to ensure that consideration is given to the impact of new development on salinity processes, as well as the impact of salinity on new development. Objectives of salinity management include:

- minimise the damage caused to property and vegetation by existing saline soils, or processes that may create saline soils;
- ensure development will not significantly increase the salt load in existing soils and watercourses;
- prevent degradation of the existing soil and groundwater environment. In particular, to minimise erosion and sediment loss and water pollution due to siltation and sedimentation;
- ensure concrete slabs, brickwork/masonry products, roads, above ground/underground infrastructure is appropriate for the saline conditions as identified.

Engineering controls to minimise the potential effects of salinity include:

- groundwater recharge is to be minimised by directing runoff from paved areas (roads, car parks, domestic paving etc) into lined stormwater drains rather than along grassed channels;
- encouraging onsite detention of roof runoff and use of low water demanding plants; and
- encouraging tree planting, especially adjacent to watercourses.

All development must incorporate soil conservation measures to minimise soil erosion and siltation during construction and following completion of development. All sediment and erosion controls are to be installed prior to the commencement of any construction works and maintained throughout the course of construction until disturbed areas have been revegetated/ established.

Where salinity is identified on the site the following potential impacts must be considered:

- what impact will the development have on existing salinity levels in the soil and groundwater,
- what impact will salinity have on the type of construction proposed which may include the method of construction, water treatment devices, etc:
    - AS 2159 - Piling Design and Installation;
    - AS 3600 - Supp1: Concrete structures;
    - AS 3700 - Masonry Structures;
    - AS 2870 - Residential Slabs and Footings;
    - any other relevant standard or provision referred to for salinity under the DCP.

Where a development site is considered a salinity hazard:

- cut and fill must be minimised, and sub-soil drainage should be installed along both sides of roads.

For service installation within areas identified as a salinity hazard, the following must occur:

- utmost care must be taken to ensure that no leakage occurs from water, sewer and stormwater pipes;
- services should be joint trenched where possible;
- where services crossroads, conduit at least should be laid at the time of the road construction;
- transverse service connections (across roads) must be laid in conduits placed at the time of road construction if the service is not laid out at that time;
- water supply pipes must be copper or a non-metal acceptable to the applicable water utility;
- sewer pipes must be un-plasticised polyvinyl chloride (UPVC) or other material acceptable to the applicable water utility;
- the use of recycled wastewater for the watering of domestic gardens should be minimised and in some cases will not be permitted.

16 UNEXPECTED FINDS PROTOCOL (UFP)

This UFP has been developed for the earthworks associated with remediation of the site. Any material that is uncovered during the earthworks that is deemed to be foreign, be that within imported fill material or building waste, should be scrutinised further. The main features to look for are:

- soil material that differs from the natural soil expected and reported onsite;
- material containing anthropogenic artefacts such as rubble, plastics, metal etc;
- widespread and/or prevalent detections of friable asbestos or bonded asbestos at locations previously not investigated or reported;
- material with an unnatural odour (e.g. fuel or solvent odour) at locations outside of the five remedial areas;
- material that is noticeably stained in colour; and
- any material that has evidently been dumped on site.

Prior to the commencement of bulk earthworks program, an “environmental” induction should be undertaken. This will comprise a meeting with the Principal Contractor / site foreman, CPM and the Environmental Consultant. The purpose of this induction will be to reiterate the aim and importance of the UFP and how it is to be implemented.

Responsibility for its implementation will be assigned. Reporting of unexpected finds potential resulting in environmental issues is recommended to be undertaken on an as-need basis using a standard proforma similar to that included in **APPENDIX F:**. If an unexpected finding is revealed during earthworks, the following protocol is recommended to be followed:

- cease disturbance of the affected site and evacuate the immediate area;
- contact the site foreman or appropriate manager who in turn is to contact CPM and the Environmental Consultant;
- site foreman and Environmental Consultant to conduct an assessment of the location of the unexpected find to determine extent of the suspected contaminated soil;
- if the Environmental Consultant considers that the material warrants further investigation the area is to be barricaded to provide a minimum ten metre diameter exclusion zone. If necessary, environmental controls should be established to minimise the potential for migration of contaminants from the impacted area;
- contaminated soil incident report is to be completed and issued to CPM and the Principal Contractor by the Environmental Consultant;
- further visual assessment and sample collection and analysis if required is to be undertaken by Environmental Consultant. If necessary, samples will be sent to a NATA registered laboratory;

- evaluation of analytical data with respect to site specific remediation criteria should be undertaken;
- contaminated soil incident report to be amended with final classification of soils, including whether the soils satisfy applicable remediation criteria and/or need to be remediated;
- area reopened for earthworks following clearance of site (based on chemical and physical results and visual / olfactory observations) or validation subsequent to remediation.
- To allow for the continuation of remediation works, any foreign material encountered (excluding any ACM) is recommended to be moved to a common location out of the way of any site activities and "quarantined". The location of this site should be discussed with the Principal Contractor and/or representatives.
- Any material that has known or suspected asbestos should be left in place and not disturbed, and the Environmental Consultant should be contacted immediately.

17 UNEXPLODED ORDINANCE

Unexploded Ordnance (UXO) can be found in most States and Territories of Australia associated with Defence sites. Defence has undertaken research to identify and define these locations. Department of Defence defines UXO as:

"*Ammunition which has been fired but has not functioned as designed and can be particularly dangerous as all the normal safety features have been overcome.*"

Department of Defence provide additional information on various types of UXO at the following URL. https://www.defence.gov.au/UXO/What/Types.asp.

A summary of potential UXO examples of includes:

- Land Service Ammunition;
    - Projectiles;
    - Mortars;
    - Pyrotechnics;
    - Antitank; and
    - Grenades.
- Naval Ordnance;
    - Projectiles; and

    - Marine markers.

- Air Delivered Ordnance;
    - Practice bombs;
    - Projectiles; and
    - Rockets.

UXO may have been buried for many years and very little handling may be required to make the item of ammunition function.

Within the site, the Lot 10 in DP 1061237 portion was owned and operated by Defence since the early 1940s to the early 1990s, however available information suggests that use of the site was for accommodation (with associated sewage treatment), and transmission operations. No information is publicly available as to whether the use or storage of land service ammunition (LSA) ever took place (e.g. projectiles, mortars, pyrotechnics, grenades).

The above summation is supported from search results of the Department of Defence UXO register for the Lot 10 in DP1061237 property, indicating that there was no known occurrence of potential UXO in Defence records. As for the Lot 5 in DP804051 portion of site, this was never owned or operated by Defence. Refer to **APPENDIX G:** for results imagery following the UXO search undertaken by Environmental Earth Sciences.

Defence's UXO records are by no means exhaustive and are provided as an indication of the wide variety of ordnance types. These records do not go into a high degree of detail and provide only a generic overview of any ordinance that might occur at a site. The information in these records is provided for interest only, it is not to be used or relied on for any other purpose.

Based on the above discussion, and with particular reference to **Appendix G**, it is concluded that the potential for UXO to be present on the site is remote. Nevertheless, the potential occurrence of UXO has therefore been included as part of the UFP, with a proforma to be developed similar to that included in **Appendix F**.

Although not considered a requirement based upon the current understanding of the site, should any potential UXO be identified during site works, additional consideration should be given to engaging a specialist consultant to complete a sweep for UXO within areas of proposed siteworks and site access.

18 QUALITY ASSURANCE AND QUALITY CONTROL

18.1 Measurement data quality objectives

'Step 7' of the DQO process is a focus on the quality of the information by measurement, that is, measurement data quality objectives (MDQOs). The aim of QA/QC is to deliver data that is representative of what is sampled, precise, accurate and reproducible. As investigations involve both field and laboratory QA/QC, these are similarly divided. The objective of this section is to provide the MDQOs and the measurement data quality indicators (MDQIs), which will be used to establish whether the DQOs have been met.

Measurement data quality is typically discussed in terms of precision, accuracy, representativeness, comparability and completeness. Although not necessarily considered in list order, the following items will form part of the QA/QC data evaluation:

- measured parameters: precision, accuracy, repeatability (comparability), blanks; and
- assessed parameters: completeness, representative of site conditions, sensitivity, and holding times.

The laboratories used will be National Association of Testing Authorities (NATA) accredited for the analytical methods performed. Containers, sample preservation (if necessary) and holding times will be consistent with industry practices as set out in ASC NEPM (2013) (*Schedule B3, section 4.4.1*) and as defined by the applicable Standards Australia procedure. The QA parameters selected, and the criteria used to evaluate the analytical data are defined below and presented in **Table 23:** .

Table 23: Measurement data quality indicators (MDQIS)

Parameter	Procedure	Minimum Frequency	Criteria	
			(5 to 10x LOR[4])	>10x LOR
Repeatability/ Precision	Field Duplicates	1 in 20	<50 RPD	<30 RPD
	Lab Replicate*	1 in 20	<50 RPD	<30 RPD
Accuracy*	Reference Material	1 in 10	60% to 140%R	80% to 120%R
	Matrix spikes			
	Surrogate spikes			
Representativeness*	Reagent Blanks	1 per batch	No detection	
	Holding Times*	Every sample	-	
Blanks**	Trip Blank	1 per batch	No detection	
	Rinsate Blanks			
Spikes	Trip Spike	1 per batch	<20 RPD	
Sensitivity	Limit of Reporting	Every sample	LOR < ½ site criteria	

Notes:

1. RPD – relative percentage difference
2. %R – percent recovery
3. LOR – limit of reporting
4. [4] no limit at <5x LOR
5. * the MDQI is usually specified in the standard method. If not, use the default values set out in this table
6. ** only necessary when measuring dissolved metals and volatile organic compounds in water samples

18.2 Measurement data quality indicators

All measurement data quality indicators (MDQIs) have a field sampling and laboratory analytical component, as discussed below.

18.2.1 Repeatability (Field collected intra-and inter-laboratory duplicates)

These samples provide a check on the analytical performance of the primary laboratory through analysis of 'blind' (intra-laboratory) duplicates at the primary laboratory and 'split' (inter-laboratory) duplicates at a secondary laboratory. At least 5 percent of soil samples (1 in 20) per day are collected in triplicate (one primary, one blind and one split duplicate sample). For comparability of data, it is important that there is little delay in the sample submission (i.e. within specific analyte holding times).

For duplicate samples, because of error associated with field splitting, an RPD of between 80 and 150% (depending on the substance) will be allowed as the MDQI (see **Table 23:**). Soil heterogeneity due to the "nugget effect" could result in significantly greater difference, particularly for metals. Consequently, samples with the most observable field homogeneity are selected. Any value >50% RPD will be noted and discussed, as per Standards Australia requirements, with respect to its acceptability for inclusion in the dataset.

18.2.2 Precision

Precision is a measure of the reproducibility of results, and is assessed on the basis of agreement between a set of replicate results obtained from duplicate analyses. The precision of a duplicate determination can be measured as RPD, and is calculated from the following equation:

$$RPD = \left[\frac{X1 - X2}{\left(\frac{X1 + X2}{2} \right)} \right] \times 100$$

where: X1 is the first duplicate value

X2 is the second duplicate value

The field blind and split duplicate results and calculated RPDs are compared to the criteria presented in **Table 23:** .

18.2.3 Accuracy

Accuracy is a measure of the agreement between an experimental determination and the true value of the parameter being measured. The determination of accuracy can be achieved through the analysis of known reference materials or assessed by the analysis of matrix spikes. Accuracy is measured in terms of percentage recovery as defined by the following equation:

$$\%R = \frac{SSR - SR}{SA} \times 100$$

where: %R = percentage recovery of the spike

SSR = spiked sample result

SR = sample result (native)

SA = spike added

Laboratories calculate percentage recoveries of spiked compounds, which are evaluated against control or acceptance limits taken from the appropriate method or the particular analytical program. If the spike recovery for a sample does not fall within the prescribed control limits, laboratory based corrective action will be sought.

Surrogate spikes consist of spiking non-target compounds into the sample prior to analysis. The spiked compounds are expected to behave during analysis in the same way as the target compounds. Every sample is spiked prior to extraction or analysis with surrogate compounds that are representative of the analysis. If surrogate spike recovery does not meet the prescribed control limits, samples will be reanalysed.

18.2.4 Representativeness

Data Point Evaluation

Representativeness expresses the degree to which sample data accurately and precisely represents a characteristic of a population, parameter variations at a sampling point, or an environmental condition.

Representativeness is primarily dependent on the design and implementation of the sampling program. Representativeness of the data is partially ensured by the avoidance of contamination, adherence to sample handling and analysis protocols, and use of proper chain-of-custody and documentation procedures. Blanks, holding times and field duplicates are all QA parameters that can assist in the analysis of representativeness for data point evaluation and will need to be analysed as part of the measurement data quality assessment.

Data Set Evaluation

Whether the data is representative of the site is checked in part by undertaking an evaluation of the whole data set to establish the data is compatible. Data compatibility is authenticated by confirming that the laws of chemistry are upheld (e.g. nitrate is not present when Eh is -250 mV), that intra-laboratory analysis relationships are consistent (i.e. BTEX is a subset of the TPH C_6-C_9 fraction), that observations and field measurements are in agreement with other field data and the laboratory data and that results are consistent with the geology, history and logic.

18.2.5 Completeness

The following information will be obtained to check for completeness of data sets:

- chain-of-custody forms (completed by Environmental Earth Sciences and the laboratory);
- Sample receipt forms;
- Requested sample results reported;
- Blank data reported;
- Laboratory duplicates reported and relative percent differences (RPDs) calculated;
- Surrogate spike data reported;
- Spike data reported; and
- NATA stamp on reports.

18.2.6 Comparability

Comparability is the evaluation of the similarity of conditions (e.g. sample depth, sample homogeneity, sampling procedures) under which separate sets of data are produced to ensure minimal common error. Data comparability should be demonstrated by the use of

standardised sampling and analysis procedures. Data comparability was maintained by undertaking the investigations as follows:

- sampling during the investigation will be conducted by trained Environmental Earth Sciences field team using Environmental Earth Sciences' standard operating procedures; and

- the same laboratories should be used for all relevant primary and duplicate samples using the same NATA approved analytical methods and holding times briefly summarised in **Table 24:** .

Table 24: Analytical methods and holding times

Analytical Method	Matrix	Method Description
pH	Soil	Measurement of the hydrogen-ion concentration in a soil-water or soil aqueous calcium chloride suspension and is expressed in pH units. ASC NEPM (2013) Schedule B(3). 24 hour holding time recommended (7 days allowed).
Moisture Content	Soil	A gravimetric procedure based on weight loss over a 12 hour drying period at 103-105 °C. This method is compliant with ASC NEPM (2013) Schedule B(3) (14 day holding time).
TPH – Semi-volatile Fraction	Soil	(USEPA SW 846 - 8015A) Sample extracts are analysed by Capillary GC/FID and quantified against alkane standards over the range C10 - C36. This method is compliant with ASC NEPM (2013) Schedule B(3) (Method 506.1) (14 day holding time).
TPH – Semi-volatile Fraction (Silica Gel Clean Up)	Soil / Water	(USEPA SW 846 - 8015A) Sample extracts are analysed by Capillary GC/FID and quantified against alkane standards over the range C10 - C36. This method is compliant with ASC NEPM (2013) Schedule B(3) (Method 506.1) (14 day holding time).
PAH	Soil / Water	(USEPA SW 846 - 8270B) Extracts are analysed by Capillary GC/MS in Selective Ion Mode (SIM) and quantification is by comparison against an established 5 point calibration curve. This method is compliant with ASC NEPM (2013) Schedule B(3) (Method 502 and 507) (14 day holding time).
TPH Volatiles/BTEX	Soil	(USEPA SW 846 - 8260B) Extracts are analysed by Purge and Trap, Capillary GC/MS. Quantification is by comparison against an established 5 point calibration curve. This method is compliant with ASC NEPM (2013) Schedule B(3) (Method 501) (14 day holding time).
Total Metals by ICP-MS	Soil / Water	(APHA 21st ed., 3120; USEPA SW 846 - 6010) (ICPAES) Metals are determined following an appropriate acid digestion of the soil. The ICPAES technique ionises samples in a plasma, emitting a characteristic spectrum based on metals present. Intensities at selected wavelengths are compared against those of matrix matched standards. This method is compliant with ASC NEPM (2013) Schedule B(3) (6 month holding time).
TPH – Semi-volatile Fraction	Water	USEPA SW 846 - 8015A The sample extract is analysed by Capillary GC/FID and quantification is by comparison against an established 5-point calibration curve of n-Alkane standards. This method is compliant with ASC NEPM (2013) Schedule B(3) (14 day holding time).
TPH Volatiles / BTEX	Water	USEPA SW 846 - 8260B Water samples are directly purged prior to analysis by Capillary GC/MS and quantification is by comparison against an established 5-point calibration curve. Alternatively, a sample is equilibrated in a headspace vial and a portion of the headspace determined by GCMS analysis. This method is compliant with ASC NEPM (2013) Schedule B(3) (14 day holding time).

18.2.7 Sensitivity

When interferences are present in the sample, a loss of sensitivity can occur resulting in an increase in the method detection limit. In some instances (e.g. where one or more compounds have particularly high concentrations) the sample must be diluted for analysis. This increases the method detection limit by the dilution factor.

The detection limits achieved by the laboratory, when adjusted for dry weight and interferences from the presence of other chemicals within the sampled matrix, must be less than half the site criteria for all analytes tested (i.e. 2 x LOR <site criteria).

18.2.8 Blanks

To meet the QC acceptance criteria, laboratory blanks should have no detectable concentrations of the target compounds. Trip blanks (taken to and returned from the field) and rinsate blanks (taken in the field) will only be necessary for analysing dissolved metals and volatile organic compounds in water samples where the threshold value is near the detection limit for an individual compound or element.

18.2.9 Holding times

Where standard holding times are exceeded, a discussion, using professional judgement, as to the integrity of the data will be required, taking into account such factors as field storage, laboratory storage and even sample bottle characteristics.

18.2.10 Procedures for anomalous samples and confirmation checking

All results will be checked for discrepancies by Environmental Earth Sciences against the anticipated results and all other results within 8 hours of receipt of the results from the laboratory.

Any result that is considered by the supervising scientist to be unusually high or at variance with other results is automatically reanalysed. A significantly different result requires immediate remedial action on the whole sample batch (retesting or using an alternative analytical method) at the laboratory's expense.

After appropriate checking by laboratories, all sample analysis result work-sheets, including those of duplicates and replicate analyses, will be checked Environmental Earth Sciences. Once confirmation checking is completed the final laboratory report is issued.

For blind duplicates, if one sample has more than two analytes exceeding the data quality objectives, the sample is carefully checked. If the error is not apparent, the sample is rejected. If more than three samples are rejected all the samples collected at that time are rejected. These samples are then re-sampled and reanalysed.

19 DELIVERABLES

19.1 Construction environmental management plan (CEMP)

In NSW, pollution from building and construction sites is regulated under the POEO Act. Under the POEO Act it is an offence to allow substances other than rainwater to enter a waterway or a stormwater system, covering requisite procedures for mitigation of potential erosion, sedimentation and dust generation ensuring potential nuisance, health issues and harm to the environment are appropriately managed throughout the project.

It is recommended that a project-specific CEMP or similar environmental management document be prepared as a condition of consent for development, documenting requisite procedures for:

- mitigating sedimentation of drains and waterways;
- ensuring appropriate physical and chemical quality of discharge waters such that there will be no adverse ecological, aesthetic or recreation impact to nearby receiving water bodies;
- providing advice on the management of general waste; and
- to ensure the effectiveness of environmental controls, and should there be an environmental incident, the emergency contact and response procedure.

19.2 Material certification advice

19.2.1 Waste classification

For reporting of waste classification assessment, at a minimum the following information should be formalised:

- Material source and description.
- Sampling density, pattern, contaminants tested.
- Result summary including comparison to Waste Guidelines threshold criteria.
- Waste classification advice.

Information for offsite disposal works:

- Source location
- Estimated volume (based on excavation size).
- Actual volume of disposal.
- Waste classification advice.

- Name of transporter.
- Final destination and POEO licence details.
- Reconciliation of waste dockets with actual disposal volume.
- Reconciliation of actual disposal volume and the estimated volume of disposal (based on excavation size).

19.2.2 Natural material certification

For certification of natural materials, whether they be imported / exported as part of remediation works, the following information should be formalised:

- Material source and description.
- Sampling density, pattern, contaminants tested in accordance with ENM Order requirements.
- Result summary including comparison to ENM Order threshold criteria.
- Conclusion on suitability of material for beneficial reuse.

19.3 Validation report

At the completion of remediation activities, a Validation Report should be prepared in accordance with the NSW OEH (2011). Validation will confirm either directly or statistically that the remediation of soils and water on site comply with the remediation criteria and have a concluding statement on the suitability of the site for the proposed use.

It is recommended that this Validation Report be submitted to the Trust within 60 days of completion of remediation activities in accordance with SEPP55 requirements.

20 LIMITATIONS

This report has been prepared by Environmental Earth Sciences NSW ACN 109 404 006 in response to and subject to the following limitations:

1. The specific instructions received from Western Sydney Parklands Trust;

2. The specific scope of works set out in PO1192017 issued by Environmental Earth Sciences NSW Pty Ltd;

3. May not be relied upon by any third party not named in this report for any purpose except with the prior written consent of Environmental Earth Sciences NSW (which consent may or may not be given at the discretion of Environmental Earth Sciences NSW);

4. This report comprises the formal report, documentation sections, tables, figures and appendices as referred to in the index to this report and must not be released to any third party or copied in part without all the material included in this report for any reason;

5. The report only relates to the site referred to in the scope of works being part of Lot 10 DP1061237 and part of Lot 5 DP804051 (“the site”);

6. The report relates to the site as at the date of the report as conditions may change thereafter due to natural processes and/or site activities;

7. No warranty or guarantee is made in regard to any other use than as specified in the scope of works and only applies to the depth tested and reported in this report;

8. Fill, soil, groundwater and rock to the depth tested on the site may be fit for the use specified in this report. Unless it is expressly stated in this report, the fill, soil and/or rock may not be suitable for classification as clean fill, excavated natural material (ENM) or virgin excavated natural material (VENM) if deposited off site;

9. This report is not a geotechnical or planning report suitable for planning or zoning purposes; and

10. Our General Limitations set out at the back of the body of this report.

21 REFERENCES

Australian & New Zealand Environment & Conservation Council / Agriculture & Resource Management Council of Australia & New Zealand (2000). *Australian and New Zealand guidelines for fresh and marine water quality. National Water Quality Management Strategy* (ANZECC & ARMCANZ, 2000).

Australian and New Zealand Governments (ANZG) (2018). *Australian and New Zealand Guidelines for Fresh and Marine Water Quality.*

Cooperative Research Centre for Contamination Assessment and Remediation of the Environment (2017). *Technical Report No.39, Risk-based Management and Remediation Guidance for Benzo(a)pyrene* (CRC Care, 2017).

Environmental Earth Sciences NSW (2019a). *Proposed Light Horse Interchange Business Hub (SSD 9667) – Contamination Assessment for Area-A* (ref: 117102_V4, 22 March 2019)

Environmental Earth Sciences NSW (2019b). Area B – *Proposed Light Horse Interchange Business Hub (SSD 9667) – Contamination Assessment at Ferrers Road, Eastern Creek* (ref: 118069_V3, 22 March 2019)

Landcom (2004). *Managing Urban Stormwater: Soils and construction – Volume 1* (the "Blue Book".

National Environment Protection Council (NEPC) (1999). *National Environment Protection (Assessment of Site Contamination) Amendment Measure 2013* (ASC NEPM, 2013).

NEPC (1998). *National Environmental Protection (Ambient Air Quality) Measure 1998* (NEPM, 1998)

NSW Department of Environment, Climate Change and Water (DECCW) (2010). *Vapour Intrusion: Technical Practice Note* (DECCW, 2010b)

NSW Department of Environment and Conservation (DEC) (2007). *Guidelines for the assessment and management of groundwater contamination* (DEC, 2007).

NSW Department of Environment Climate Change and Water (DECCW) (2009). *Guidelines for Implementing the POEO (Underground Petroleum Storage Systems) Regulation 2008*.

NSW DECCW (2010a). *UPSS Technical Note: Decommissioning, Abandonment and Removal of UPSS*.

NSW DECCW (2010b). *UPSS Technical Note: Site Validation Reporting*.

NSW Department of Infrastructure, Planning and Natural Resource (DIPNR) (2002). *Salinity Potential in Western Sydney 2002.*

NSW Environment Protection Authority (EPA) (1995). *Contaminated sites: sampling design guidelines* (NSW EPA, 1995).

NSW EPA (2012). *Guidelines for the Assessment and Management of Sites Impacted by Hazardous Ground Gases*.

NSW EPA (2014a). *Waste Classification Guidelines – Part 1: Classifying Waste* (EPA, 2014) (the "Waste Guidelines").

NSW EPA (2014b). *Technical Note: Investigation of Service Station Sites*.

NSW EPA (2015). *Guidelines on the Duty to Report Contamination Under the Contaminated Land Management Act 1997* (EPA, 2015).

NSW EPA (2017). *Contaminated Sites: Guidelines for the NSW Site Auditor Scheme 3rd Edition* (NSW EPA, 2017).

NSW Department of Minerals and Energy (1991). *1:100 000 Penrith geological series sheet (9030)*

NSW Department of Urban Affairs and Planning (DUAP) (1998). *Managing Land Contamination, Planning Guidelines SEPP 55–Remediation of Land*.

NSW Office of Environment and Heritage (OEH) (2011). *Guidelines for Consultants Reporting on Contaminated Sites*.

National Health and Medical Research Council and Natural Resource Management Ministerial Council (2011). *Australian drinking water guidelines, National Water Quality Management Strategy* (NHMRC/ NRMMC, 2011).

National Water Quality Management Strategy (NWQMS) (2000). *Australian Guidelines for Urban Stormwater Management.*

Olszowy, H., Torr, H. and Imray, P. (1995). *Trace element concentrations in soils from rural and urban areas of Australia*. Contaminated site monograph series no. 4, South Australian Health Commission, Adelaide, Australia.

Safe Work Australia (2018). *Model Code of Practice: How to safely remove asbestos*.

SafeWork NSW (2019a). *How to Safely Remove Asbestos (August 2019)*.

SafeWork NSW (2019b). *How to Manage and Control Asbestos in the Workplace* (August 2019).

SafeWork NSW (2019c). *Construction Work* (August 2019).

SafeWork NSW (2019d). *Demolition Work* (August 2019).

SafeWork NSW (2019e). *Excavation Work* (August 2019).

SafeWork NSW (2019e). *Work Health and Safety Consultation, Cooperation and Coordination* (August 2019).

Western Australia Department of Health (WA DoH) (2009). *Guidelines for the Assessment, Remediation and Management of Asbestos-Contaminated Sites in Western Australia* (WA DoH, 2009).

WA DoH (2018). *Guidelines for the Assessment, Remediation and Management of Asbestos-Contaminated Sites in Western Australia – Summary Update 2018* (WA DoH, 2018).

Zoic Environmental (2017). *Draft Preliminary Site Investigation, Proposed Lighthorse Business Hub, Corner of M4 and M7 Motorways, Eastern Creek NSW* (ref: 17105; August 2017)

22 GLOSSARY OF TERMS

The following descriptions are of terms used in the text of this report.

Alluvial. Describes material deposited by, or in transit in, flowing water.

Anaerobic. Reducing or without oxygen.

Aquifer. A rock or sediment in a formation, group of formations, or part of a formation which is saturated and sufficiently permeable to transmit economic quantities of water to wells and springs.

Aquifer, confined. An aquifer that is overlain by a confining bed with significantly lower hydraulic conductivity than the aquifer.

Aquifer, perched. A region in the unsaturated zone where the soil is locally saturated because it overlies soil or rock of low permeability.

Background. The natural level of a property.

Baseline. An initial value of a measure.

Biodegradation. A biochemical process of microbial oxidation of complex organic compounds, to simpler chemical products. Micro-organisms derive the energy and cell carbon for growth from oxidation of organic compounds.

Bore. A hydraulic structure that facilitates the monitoring of groundwater level, collection of groundwater samples, or the extraction (or injection) of groundwater. Also known as a well, monitoring well or piezometer, although piezometers are typically of small diameter and only used for measuring the groundwater elevation or potentiometric surface.

Borehole. An uncased well drill hole.

Clay. A soil material composed of particles finer than 0.002 mm. When used as a soil texture group such soils contain at least 35% clay.

Colluvial. Unconsolidated soil and rock material moved down-slope by gravity.

Confined Aquifer. An aquifer that is confined between two low-permeability aquitards. The groundwater in these aquifers is usually under hydraulic pressure, i.e. its hydraulic head is above the top of the aquifer.

Confining layer. A layer with low vertical hydraulic conductivity that is stratigraphically adjacent to one or more aquifers. A confining layer is an aquitard. It may lie above or below the aquifer.

Contaminant. Generally, any chemical species introduced into the soil or water. More particularly relates to those species that render soil or water unfit for beneficial use.

Contamination. Is considered to have occurred when the concentration of a specific element or compound is established as being greater than the normally expected (or actually quantified) background concentration.

Discrete sample. Samples collected from different locations and depths that will not be composited but analysed individually.

Electrical Conductivity (EC). The EC of water is a measure of its ability to conduct an electric current. This property is related to the ionic content of the sample, which is in turn a function of the total dissolved (ionisable) solids (TDS) concentration. An estimate of TDS in fresh water can be obtained by multiplying EC by 0.65.

Flow path. The direction in which groundwater is moving.

Fluvial. A material deposited by, or in transit, in streams or watercourses.

Gradient. The rate of inclination of a slope. The degree of deviation from the horizontal; also refers to pressure.

Groundwater. The water held in the pores in the ground below the water table.

Groundwater Elevation. The elevation of the groundwater surface measured relative to a specified datum such as the Australian Height Datum (mAHD) or an arbitrary survey datum onsite, or “reduced level” (mRL).

Head space. The air space at the top of a soil or water sample.

Heavy Metals. All metallic elements whose atomic mass exceeds that of calcium (20) and includes lead (Pb), copper (Cu), Zinc (Zn), cadmium (Cd), and tin (Sn).

Heterogeneous. A condition of having different characteristics in proximate locations. Non-uniform. (Opposite of homogeneous).

Hydraulic Conductivity (K). A coefficient describing the rate at which water can move through a permeable medium. It has units of length per time. The units for hydraulic conductivity are typically m/day.

Hydraulic Gradient (i). The rate of change in total head per unit of distance of flow in a given direction – the direction is that which yields a maximum rate of decrease in head. Hydraulic Gradient is unit less.

Hydraulic Head (h). The sum of the elevation head and the pressure head at a point in an aquifer. This is typically reported as an elevation above a fixed datum, such as sea level.

Hydrocarbon. A molecule consisting of carbon and hydrogen atoms only, such as found in petroleum.

Hydrocarbon, volatile. A hydrocarbon with a low boiling point (high vapour pressure). Normally taken to mean those with ten (or less) carbon atoms per molecule.

Infiltration. The passage of water, under the influence of gravity, from the land surface into the subsurface.

Lithic. Containing large amounts of fragments derived from previously formed rocks.

Organics. Chemical compounds comprising atoms of carbon, hydrogen and others (commonly oxygen, nitrogen, phosphorous, sulfur). Opposite is inorganic, referring to chemical species not containing carbon.

Perched Groundwater. Unconfined groundwater separated from an underlying main body of groundwater by an unsaturated zone. Perched groundwater typically occurs in discontinuous, often ephemeral, lenses, with unsaturated conditions both above and below.

Permeability (k). Property of porous medium relating to its ability to transmit or conduct liquid (usually water) under the influence of a driving force. Where water is the fluid, this is effectively the hydraulic conductivity. A function of the connectivity of pore spaces.

Piezometric or Potentiometric Surface. A surface that represents the level to which water will rise in cased bores. The water table is the potentiometric surface in an unconfined aquifer.

pH. A logarithmic index for the concentration of hydrogen ions in an aqueous solution, which is used as a measure of acidity.

Polycyclic aromatic Hydrocarbons (PAHs). Complex organic molecules which originate typically in the combustion of organic compounds.

Porosity (n). The ratio of the volume of void spaces in a rock or sediment to the total volume of the rock or sediment. Typically given as a percentage.

Porosity, effective (ne). The volume of the void spaces through which water or other fluids can travel in a rock or sediment divided by the total volume of the rock or sediment.

Purge (wells). The pumping out of well water to remove drilling debris or impurities; also conducted to bring fresh groundwater into the casing for sample collection. The later ensures that a more representative sample of an aquifer is taken.

QA/QC. Quality Assurance / Quality Control.

Redox potential (Eh). The oxidation/reduction potential of the soil or water measured as milli-volt.

Reducing Conditions. Can be simply expressed as the absence of oxygen, though chemically the meaning is more complex. For more details refer to OXIDATION.

Remediation. The restoration of land or groundwater contaminated by pollutants, to a state suitable for other, beneficial uses.

Representative Sample. Assumed not to be significantly different than the population of samples available. In many investigations samples are often collected to represent the worst case situation.

Saturated Zone. A zone in which the rock or soil pores are filled (saturated) with water.

Standing Water Level (SWL). The depth to the groundwater surface in a well or bore measured below a specific reference point – usually recorded as metres below the top of the well casing or below the ground surface.

Stratigraphy. A vertical sequence of geological units.

Subsoil. Subsurface material comprising the B and C horizons of soils with distinct profiles. They often have brighter colours and higher clay content than topsoils.

Texture. The size of particles in the soil. Texture is divided into six groups, depending on the amount of coarse sand, fine sand, silt and clay in the soil.

Topsoil. Part of the soil profile, typically the A1 horizon, containing material which is usually darker, more fertile and better structured than the underlying layers.

Total Dissolved Salts (TDS). The total dissolved salts comprise dissociated compounds and undissociated compounds, but not suspended material, colloids or dissolved gases.

Toxicity. The inherent potential or capacity of a material to cause adverse effects in a living organism.

Unsaturated Zone. The zone between the land surface and the water table, in which the rock or soil pores contain both air and water (water in the unsaturated zone is present at less than atmospheric pressure). It includes the root zone, intermediate zone and capillary fringe. Saturated bodies such as perched groundwater may exist in the unsaturated zone. Also referred to as the Vadose Zone.

Volatile. Having a low boiling or subliming pressure (a high vapour pressure).

Water table. Interface between the saturated zone and unsaturated zones. The surface in an aquifer at which pore water pressure is equal to atmospheric pressure.

Well. A hydraulic structure that facilitates the monitoring of groundwater level, collection of groundwater samples, or the extraction (or injection) of groundwater. Also known as a Bore.

ENVIRONMENTAL EARTH SCIENCES
CONTAMINATION RESOLVED

ENVIRONMENTAL EARTH SCIENCES GENERAL LIMITATIONS

Scope of services
The work presented in this report is Environmental Earth Sciences response to the specific scope of works requested by, planned with and approved by the client. It cannot be relied on by any other third party for any purpose except with our prior written consent. Client may distribute this report to other parties and in doing so warrants that the report is suitable for the purpose it was intended for. However, any party wishing to rely on this report should contact us to determine the suitability of this report for their specific purpose.

Data should not be separated from the report
A report is provided inclusive of all documentation sections, limitations, tables, figures and appendices and should not be provided or copied in part without all supporting documentation for any reason, because misinterpretation may occur.

Subsurface conditions change
Understanding an environmental study will reduce exposure to the risk of the presence of contaminated soil and or groundwater. However, contaminants may be present in areas that were not investigated, or may migrate to other areas. Analysis cannot cover every type of contaminant that could possibly be present. When combined with field observations, field measurements and professional judgement, this approach increases the probability of identifying contaminated soil and or groundwater. Under no circumstances can it be considered that these findings represent the actual condition of the site at all points.

Environmental studies identify actual sub-surface conditions only at those points where samples are taken, when they are taken. Actual conditions between sampling locations differ from those inferred because no professional, no matter how qualified, and no sub-surface exploration program, no matter how comprehensive, can reveal what is hidden below the ground surface. The actual interface between materials may be far more gradual or abrupt than an assessment indicates. Actual conditions in areas not sampled may differ from that predicted. Nothing can be done to prevent the unanticipated. However, steps can be taken to help minimize the impact. For this reason, site owners should retain our services.

Problems with interpretation by others
Advice and interpretation is provided on the basis that subsequent work will be undertaken by Environmental Earth Sciences NSW. This will identify variances, maintain consistency in how data is interpreted, conduct additional tests that may be necessary and recommend solutions to problems encountered on site. Other parties may misinterpret our work and we cannot be responsible for how the information in this report is used. If further data is collected or comes to light we reserve the right to alter their conclusions.

Obtain regulatory approval
The investigation and remediation of contaminated sites is a field in which legislation and interpretation of legislation is changing rapidly. Our interpretation of the investigation findings should not be taken to be that of any other party. When approval from a statutory authority is required for a project, that approval should be directly sought by the client.

Limit of liability
This study has been carried out to a particular scope of works at a specified site and should not be used for any other purpose. This report is provided on the condition that Environmental Earth Sciences NSW disclaims all liability to any person or entity other than the client in respect of anything done or omitted to be done and of the consequence of anything done or omitted to be done by any such person in reliance, whether in whole or in part, on the contents of this report. Furthermore, Environmental Earth Sciences NSW disclaims all liability in respect of anything done or omitted to be done and of the consequence of anything done or omitted to be done by the client, or any such person in reliance, whether in whole or any part of the contents of this report of all matters not stated in the brief outlined in Environmental Earth Sciences NSW's proposal number and according to Environmental Earth Sciences general terms and conditions and special terms and conditions for contaminated sites.

To the maximum extent permitted by law, we exclude all liability of whatever nature, whether in contract, tort or otherwise, for the acts, omissions or default, whether negligent or otherwise for any loss or damage whatsoever that may arise in any way in connection with the supply of services. Under circumstances where liability cannot be excluded, such liability is limited to the value of the purchased service.

FIGURES

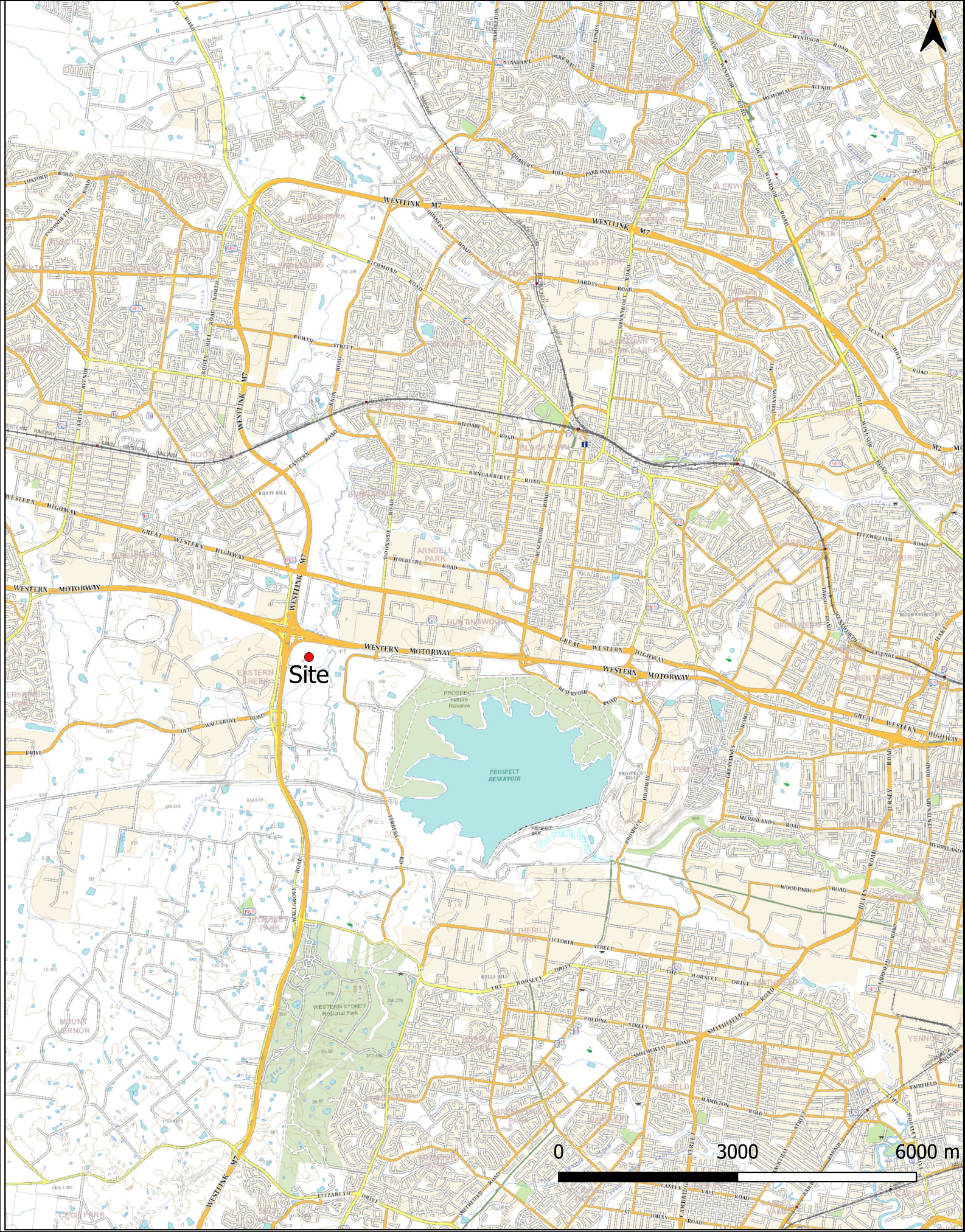

ENVIRONMENTAL EARTH SCIENCES CONTAMINATION RESOLVED	Drawn by: SG	Date: Nov 2019	**Western Sydney Parklands Trust**	Figure No. 1
	Proj. Manager: CN	Scale: As shown	Eastern Creek, NSW	Site Location
	Job No: 119104	Source: Nearmaps		

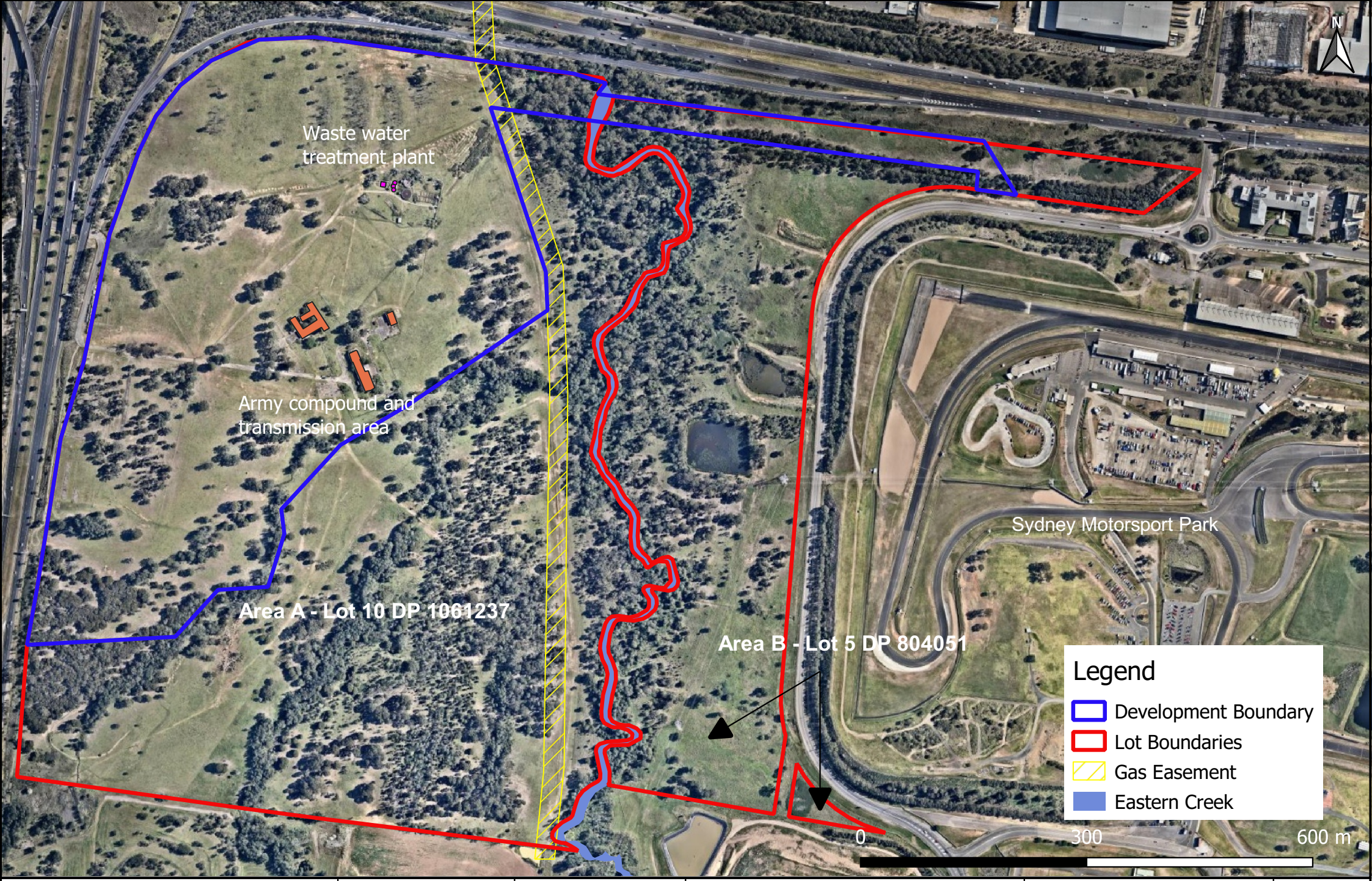

ENVIRONMENTAL EARTH SCIENCES CONTAMINATION RESOLVED	Drawn by: SG	Date: November 2019	**Western Sydney Parklands Trust**	Site Features and Layout	Figure No. 2
	Proj. Manager: CN	Scale: As shown	Eastern Creek, NSW		
	Job No: 119104	Source: Nearmaps			



ENVIRONMENTAL EARTH SCIENCES
CONTAMINATION RESOLVED

Drawn by: SG	Date: November 2019	**Western Sydney Parklands Trust**	Investigation Locations - Area A	Figure No. 3a
Proj. Manager: CN	Scale: As shown	Eastern Creek, NSW		
Job No: 119104	Source: Nearmaps			

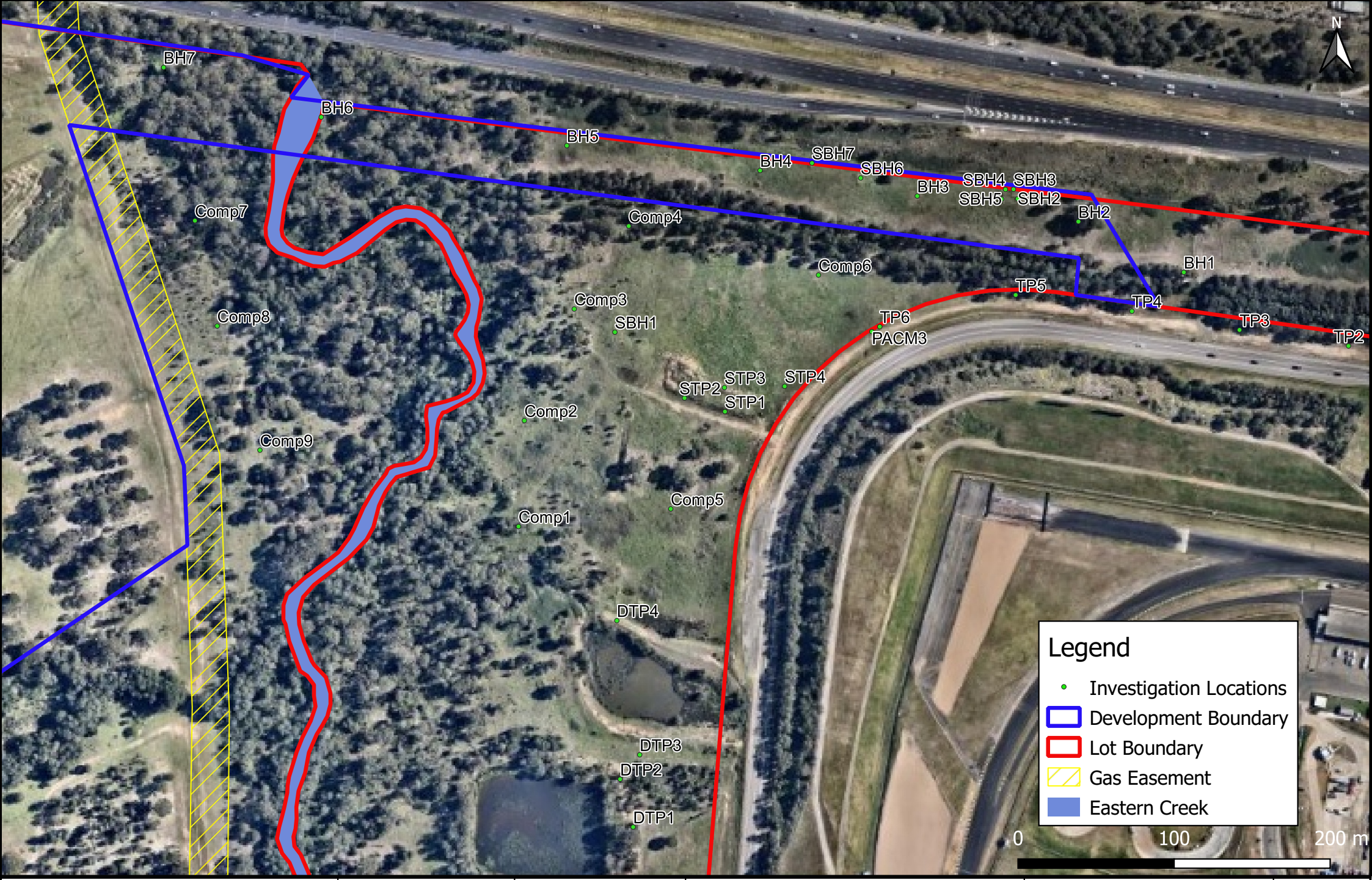

ENVIRONMENTAL EARTH SCIENCES CONTAMINATION RESOLVED	Drawn by: SG	Date: November 2019	**Western Sydney Parklands Trust**	Investigation Locations - Area B	Figure No. 3b
	Proj. Manager: CN	Scale: As shown	Eastern Creek, NSW		
	Job No: 119104	Source: Nearmaps			

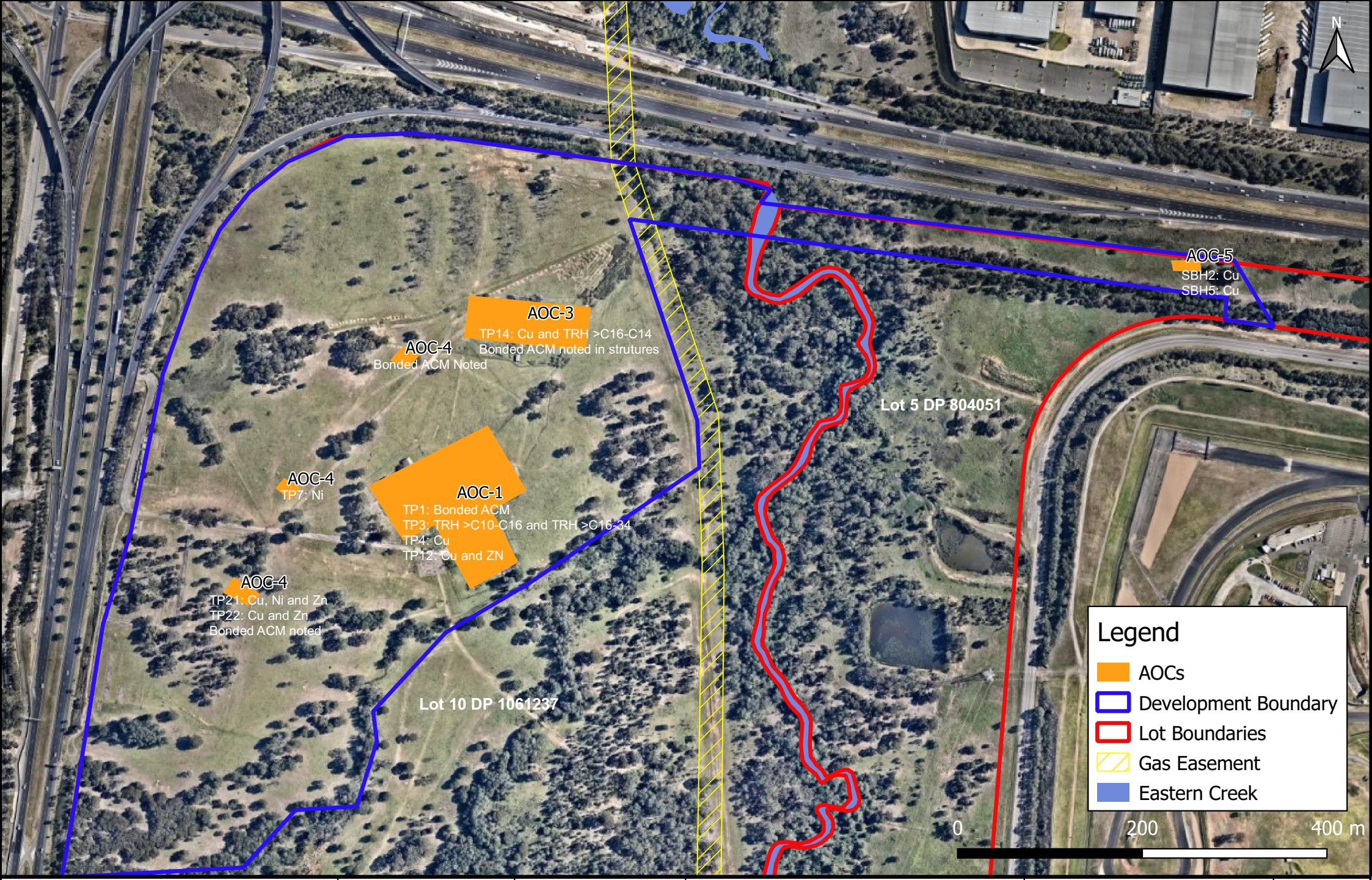

ENVIRONMENTAL EARTH SCIENCES
CONTAMINATION RESOLVED

Drawn by: SG	Date: November 2019	**Western Sydney Parklands Trust**	Areas of Concern and Criteria Exceedances	Figure No. 4
Proj. Manager: CN	Scale: As shown	Eastern Creek, NSW		
Job No: 119104	Source: Nearmaps			

APPENDIX A: RESULTS SUMMARY TABLES

TABLE A1 - RESULTS SUMMARY TABLE SOIL

Analyte	Units	EQL	NEPM 2013 Table 1A(1) HILs Comm/Ind D Soil	NEPM 2013 Table 1A(3) Comm/Ind D Soil HSL for Vapour Intrusion, Clay 0-1m	NEPM 2013 Table 1B(6) ESLs for Comm/Ind, Fine Soil 0-2m	EILs derived according to NEPM 2013 0-2m	NEPM 2013 Table 1B(7) Management Limits Comm / Ind, Fine Soil	NSW 2014 General Solid Waste CT1 (No Leaching)	NSW 2014 Restricted Solid Waste CT2 (No Leaching)	DP1 3.8-4.0	TP1 0.1-0.2	TP1 2.0-2.2	TP2 0.8-1.0	FD1	TP2 4.0-4.2	TP3 1.2-1.3	TP4 0-0.2	TP6 0.2-0.3	TP7 0.1-0.2	TP8 0.8-1.0	TP9 0.1-0.3	TP11 0.1-0.3
Field_ID										DP1	TP1	TP1	TP2		TP2	TP3	TP4	TP6	TP7	TP8	TP9	TP11
LocCode										3.8-4	0.1-0.2	2-2.2	0.8-1		4-4.2	1.2-1.3	0-0.2	0.2-0.3	0.1-0.2	0.8-1	0.1-0.3	0.1-0.3
Sample_Depth_Range										22/11/2017	22/11/2017	22/11/2017	22/11/2017	22/11/2017	22/11/2017	22/11/2017	22/11/2017	22/11/2017	22/11/2017	22/11/2017	22/11/2017	22/11/2017
Sampled_Date-Time																						
Matrix_Description																						
Asbestos Classification and Quantitation																						
Weight Used for % Calculation	kg	0.0001								-	-	-	-	-	-	-	-	-	-	-	-	-
Asbestos (Fines and Fibrous <7mm)	g	0.0004								-	-	-	-	-	-	-	-	-	-	-	-	-
Asbestos (Fines and Fibrous FA+AF)	% (w/w)	0.001								-	-	-	-	-	-	-	-	-	-	-	-	-
Asbestos Containing Material	g	0.1								-	-	-	-	-	-	-	-	-	-	-	-	-
Asbestos Containing Material	% (w/w)	0.01								-	-	-	-	-	-	-	-	-	-	-	-	-
Fibrous Asbestos >7mm	g	0.0004								-	-	-	-	-	-	-	-	-	-	-	-	-
Asbestos Identification in Bulk Solids																						
Asbestos Type	-									-	-	-	-	-	-	-	-	-	-	-	-	-
Asbestos Detected										-	-	-	-	-	-	-	-	-	-	-	-	-
APPROVED IDENTIFIER:	--									-	-	-	-	-	-	-	-	-	-	-	-	-
Unknown Mineral Fibre Detected	g/kg	0.1								-	-	-	-	-	-	-	-	-	-	-	-	-
Asbestos Identification in Soils																						
Asbestos Type	-									-	NA	-	-	-	-	-	NA	NA	NA	NA	NA	NA
Asbestos Detected										-	No	-	-	-	-	-	No	No	No	No	No	No
Asbestos (Trace)	Fibres	5								-	No	-	-	-	-	-	No	No	No	No	No	No
APPROVED IDENTIFIER:	--									-	S.SPOONER	-	-	-	-	-	S.SPOONER	S.SPOONER	S.SPOONER	S.SPOONER	S.SPOONER	S.SPOONER
Moisture Content	%	1								15.3	5.6	22.2	11.4	10.3	16.4	10.9	4.2	14.6	2.4	10.5	5.6	6.2
PAH/Phenols (SIM)																						
Benzo(a)pyrene TEQ (LOR)	mg/kg	0.5								1.2	1.2	1.2	1.2	1.2	1.2	1.2	1.2	1.2	1.2	1.2	3.4	2
Benzo(b+j)fluoranthene	mg/kg	0.5								<0.5	<0.5	<0.5	<0.5	<0.5	<0.5	<0.5	<0.5	<0.5	<0.5	<0.5	2.2	1.2
Benzo(a)pyrene TEQ calc (Half)	mg/kg	0.5								0.6	0.6	0.6	0.6	0.6	0.6	0.6	0.6	0.6	0.6	0.6	3.1	1.8
Benzo(a)pyrene TEQ calc (Zero)	mg/kg	0.5								<0.5	<0.5	<0.5	<0.5	<0.5	<0.5	<0.5	<0.5	<0.5	<0.5	<0.5	2.8	1.5
Acenaphthene	mg/kg	0.5								<0.5	<0.5	<0.5	<0.5	<0.5	<0.5	<0.5	<0.5	<0.5	<0.5	<0.5	<0.5	<0.5
Acenaphthylene	mg/kg	0.5								<0.5	<0.5	<0.5	<0.5	<0.5	<0.5	<0.5	<0.5	<0.5	<0.5	<0.5	<0.5	<0.5
Anthracene	mg/kg	0.5								<0.5	<0.5	<0.5	<0.5	<0.5	<0.5	<0.5	<0.5	<0.5	<0.5	<0.5	<0.5	<0.5
Benzo(a)anthracene	mg/kg	0.5								<0.5	<0.5	<0.5	<0.5	<0.5	<0.5	<0.5	<0.5	<0.5	<0.5	<0.5	1.4	0.9
Benzo(a)pyrene	mg/kg	0.5			0.7			0.8	**3.2**	<0.5	<0.5	<0.5	<0.5	<0.5	<0.5	<0.5	<0.5	<0.5	<0.5	<0.5	2.3	1.2
Benzo(ghi)perylene	mg/kg	0.5								<0.5	<0.5	<0.5	<0.5	<0.5	<0.5	<0.5	<0.5	<0.5	<0.5	<0.5	1.3	0.7
Benzo(k)fluoranthene	mg/kg	0.5								<0.5	<0.5	<0.5	<0.5	<0.5	<0.5	<0.5	<0.5	<0.5	<0.5	<0.5	0.7	<0.5
Chrysene	mg/kg	0.5								<0.5	<0.5	<0.5	<0.5	<0.5	<0.5	<0.5	<0.5	<0.5	<0.5	<0.5	1.5	0.9
Dibenzo(a,h)anthracene	mg/kg	0.5								<0.5	<0.5	<0.5	<0.5	<0.5	<0.5	<0.5	<0.5	<0.5	<0.5	<0.5	<0.5	<0.5
Fluoranthene	mg/kg	0.5								<0.5	<0.5	<0.5	<0.5	<0.5	<0.5	<0.5	<0.5	<0.5	<0.5	<0.5	0.6	3.2	2
Fluorene	mg/kg	0.5								<0.5	<0.5	<0.5	<0.5	<0.5	<0.5	5.1	<0.5	<0.5	<0.5	<0.5	<0.5	<0.5
Indeno(1,2,3-cd)pyrene	mg/kg	0.5								<0.5	<0.5	<0.5	<0.5	<0.5	<0.5	<0.5	<0.5	<0.5	<0.5	<0.5	1	0.5
Naphthalene (Ex SVOC)	mg/kg	0.5								<0.5	<0.5	<0.5	<0.5	<0.5	<0.5	2.3	<0.5	<0.5	<0.5	<0.5	<0.5	<0.5
PAHs (Sum of total)	mg/kg	0.5	4000							<0.5	<0.5	<0.5	<0.5	<0.5	<0.5	11.2	<0.5	<0.5	<0.5	1.3	18.7	10.8
Phenanthrene	mg/kg	0.5								<0.5	<0.5	<0.5	<0.5	<0.5	<0.5	3.8	<0.5	<0.5	<0.5	<0.5	1.5	1.1
Pyrene	mg/kg	0.5								<0.5	<0.5	<0.5	<0.5	<0.5	<0.5	<0.5	<0.5	<0.5	<0.5	0.7	3.6	2.3
Total PAH (NSW Waste 2014)	mg/kg							200	**800**	<8	<8	<8	<8	<8	<8	12.4	<8	<8	<8	4.8	18.25	11.6
Carcinogenic PAHs as B(a)P TPE	mg/kg		40							<1.16	<1.16	<1.16	<1.16	<1.16	<1.16	<1.16	<1.16	<1.16	<1.16	<1.16	2.888	1.631
Heavy Metals																						
Mercury	mg/kg	0.1	730					4	**16**	<0.1	<0.1	<0.1	<0.1	<0.1	<0.1	<0.1	<0.1	<0.1	<0.1	<0.1	<0.1	<0.1
Arsenic	mg/kg	5	3000			160		100	**400**	<5	<5	7	6	5	7	<5	<5	6	<5	<5	<5	<5
Cadmium	mg/kg	1	900					20	**80**	<1	<1	<1	<1	<1	<1	<1	<1	<1	<1	<1	<1	<1
Chromium (III+VI)	mg/kg	2				320				13	11	22	17	15	13	<2	4	25	19	25	42	56
Copper	mg/kg	5	240000			85				10	15	15	14	12	26	<5	87	13	64	28	24	33
Lead	mg/kg	5	1500			1800		100	**400**	11	49	15	22	20	18	<5	<5	23	<5	18	20	22
Nickel	mg/kg	2	6000			60		40	**160**	7	6	6	6	5	6	<2	37	10	114	20	40	46
Zinc	mg/kg	5	400000			330				36	48	17	15	13	30	8	23	16	51	47	46	57
Total Recoverable Hydrocarbons - Semivolatile																						
C10-C16	mg/kg	50					1000			<50	<50	<50	<50	<50	<50	5600	<50	<50	<50	<50	<50	<50
C16-C34	mg/kg	100			2500		3500			<100	<100	<100	<100	<100	<100	2720	<100	<100	<100	<100	150	<100
C34-C40	mg/kg	100			6600		10000			<100	<100	<100	<100	<100	<100	910	<100	<100	<100	<100	110	<100
F2-NAPHTHALENE	mg/kg	50		NL	170					<50	<50	<50	<50	<50	<50	5600	<50	<50	<50	<50	<50	<50
C10 - C14	mg/kg	50								<50	<50	<50	<50	<50	<50	3390	<50	<50	<50	<50	<50	<50
C15 - C28	mg/kg	100								<100	<100	<100	<100	<100	<100	4680	<100	<100	<100	<100	<100	<100
C29-C36	mg/kg	100								<100	<100	<100	<100	<100	<100	680	<100	<100	<100	<100	120	<100
+C10 - C36 (Sum of total)	mg/kg	50						10000	**40000**	<50	<50	<50	<50	<50	<50	8750	<50	<50	<50	<50	120	<50
C10 - C40 (Sum of total)	mg/kg	50								<50	<50	<50	<50	<50	<50	9230	<50	<50	<50	<50	260	<50
TPH C10-C14 Fraction after Silica Clean	mg/kg	50								-	-	-	-	-	-	-	-	-	-	-	-	-
TPH C15-C28 Fraction after Silica Clean	mg/kg	100								-	-	-	-	-	-	-	-	-	-	-	-	-
TPH C29-C36 Fraction after Silica Clean	mg/kg	100								-	-	-	-	-	-	-	-	-	-	-	-	-
TRH >C10-C16 (after silica gel clean-up)	mg/kg	50								-	-	-	-	-	-	-	-	-	-	-	-	-
TRH >C16-C34 (after silica gel clean-up)	mg/kg	100								-	-	-	-	-	-	-	-	-	-	-	-	-
TRH >C34-C40 (after silica gel clean-up)	mg/kg	100								-	-	-	-	-	-	-	-	-	-	-	-	-
TRH C10-C36 (Total) (after silica gel cles	mg/kg	50								-	-	-	-	-	-	-	-	-	-	-	-	-
>C10 - C16 Fraction minus Naphthalene	mg/kg	50								-	-	-	-	-	-	-	-	-	-	-	-	-
>C10 - C40 Fraction (sum) (SG)	mg/kg	50								-	-	-	-	-	-	-	-	-	-	-	-	-
BTEX and volatile TRHs																						
Benzene	mg/kg	0.2		4	95			10	**40**	<0.2	<0.2	<0.2	<0.2	<0.2	<0.2	<0.2	<0.2	<0.2	<0.2	<0.2	<0.2	<0.2
Ethylbenzene	mg/kg	0.5		NL	185			600	**2400**	<0.5	<0.5	<0.5	<0.5	<0.5	<0.5	<0.5	<0.5	<0.5	<0.5	<0.5	<0.5	<0.5
Naphthalene	mg/kg	1		NL	370	370				<1	<1	<1	<1	<1	<1	<1	<1	<1	<1	<1	<1	<1
Toluene	mg/kg	0.5		NL	135			288	**1152**	<0.5	<0.5	<0.5	<0.5	<0.5	<0.5	<0.5	<0.5	<0.5	<0.5	<0.5	<0.5	<0.5
C6 - C9	mg/kg	10						650	**2600**	<10	<10	<10	<10	<10	<10	26	<10	<10	<10	<10	<10	<10
Total BTEX	mg/kg	0.2								<0.2	<0.2	<0.2	<0.2	<0.2	<0.2	<0.2	<0.2	<0.2	<0.2	<0.2	<0.2	<0.2
Xylene (m & p)	mg/kg	0.5								<0.5	<0.5	<0.5	<0.5	<0.5	<0.5	<0.5	<0.5	<0.5	<0.5	<0.5	<0.5	<0.5
Xylene (o)	mg/kg	0.5								<0.5	<0.5	<0.5	<0.5	<0.5	<0.5	<0.5	<0.5	<0.5	<0.5	<0.5	<0.5	<0.5
Xylene Total	mg/kg	0.5		NL	95			1000	**4000**	<0.5	<0.5	<0.5	<0.5	<0.5	<0.5	<0.5	<0.5	<0.5	<0.5	<0.5	<0.5	<0.5
C6-C10 less BTEX (F1)	mg/kg	10		310	215					<10	<10	<10	<10	<10	<10	54	<10	<10	<10	<10	<10	<10
C6-C10	mg/kg	10					800			<10	<10	<10	<10	<10	<10	54	<10	<10	<10	<10	<10	<10

TABLE A1 - RESULTS SUMMARY TABLE SOIL

Analyte	Units	EQL	NEPM 2013 Table 1A(1) HILs Comm/Ind D Soil	NEPM 2013 Table 1A(3) Comm/Ind D Soil HSL for Vapour Intrusion, Clay 0-1m	NEPM 2013 Table 1B(6) ESLs for Comm/Ind, Fine Soil 0-2m	EILs derived according to NEPM 2013 0-2m	NEPM 2013 Table 1B(7) Management Limits Comm / Ind, Fine Soil	NSW 2014 General Solid Waste CT1 (No Leaching)	NSW 2014 Restricted Solid Waste CT2 (No Leaching)	Field_ID	DP1 3.8-4.0	TP11 0.5-0.7	TP12 0-0.2	TP13 0.1-0.2	TP14 0-0.2	TP15 0.1-0.2	TP16 0.2-0.3	TP18 0-0.1	TP19 0.2-0.4	TP20 0.1-0.3	TP21 0.1-0.3	TP21 0.8-0.9	TP21 1.4-1.5	TP22 0.2-0.3	FD2	TP23 0.2-0.3	TP23 1.0-1.2
										LocCode	DP1	TP11	TP12	TP13	TP14	TP15	TP16	TP18	TP19	TP20	TP21	TP21	TP21	TP22	TP22	TP23	TP23
										Sample_Depth_Range	3.8-4	0.5-0.7	0-0.2	0.1-0.2	0-0.2	0.1-0.2	0.2-0.3	0-0.1	0.2-0.4	0.1-0.3	0.1-0.3	0.8-0.9	1.4-1.5	0.2-0.3		0.2-0.3	1-1.2
										Sampled_Date-Time	22/11/2017	22/11/2017	22/11/2017	22/11/2017	22/11/2017	22/11/2017	22/11/2017	22/11/2017	22/11/2017	22/11/2017	22/11/2017	22/11/2017	22/11/2017	22/11/2017	22/11/2017	22/11/2017	22/11/2017
										Matrix_Description																	
Asbestos Classification and Quantitation																											
Weight Used for % Calculation	kg	0.0001									-	-	-	-	-	-	-	-	-	-	0.0246	0.0192	-	-	-	-	-
Asbestos (Fines and Fibrous <7mm)	g	0.0004									-	-	-	-	-	-	-	-	-	-	<0.0004	<0.0004	-	-	-	-	-
Asbestos (Fines and Fibrous FA+AF)	% (w/w)	0.001									-	-	-	-	-	-	-	-	-	-	<0.001	<0.001	-	-	-	-	-
Asbestos Containing Material	g	0.1									-	-	-	-	-	-	-	-	-	-	<0.1	<0.1	-	-	-	-	-
Asbestos Containing Material	% (w/w)	0.01									-	-	-	-	-	-	-	-	-	-	<0.01	<0.01	-	-	-	-	-
Fibrous Asbestos >7mm	g	0.0004									-	-	-	-	-	-	-	-	-	-	<0.0004	<0.0004	-	-	-	-	-
Asbestos Identification in Bulk Solids																											
Asbestos Type	-										-	-	-	-	-	-	-	-	-	-	-	-	-	-	-	-	-
Asbestos Detected											-	-	-	-	-	-	-	-	-	-	-	-	-	-	-	-	-
APPROVED IDENTIFIER:	--										-	-	-	-	-	-	-	-	-	-	-	-	-	-	-	-	-
Unknown Mineral Fibre Detected	g/kg	0.1									-	-	-	-	-	-	-	-	-	-	-	-	-	-	-	-	-
Asbestos Identification in Soils																											
Asbestos Type	-										-	-	-	-	-	-	-	NA	NA	NA	NA	NA	-	NA	-	NA	-
Asbestos Detected											-	-	-	-	-	-	-	No	No	No	No	No	-	No	-	No	-
Asbestos (Trace)	Fibres	5									-	-	-	-	-	-	-	No	No	No	No	No	-	No	-	No	-
APPROVED IDENTIFIER:	--										-	-	-	-	-	-	-	S.SPOONER	S.SPOONER	S.SPOONER	S.SPOONER	S.SPOONER	-	S.SPOONER	-	S.SPOONER	-
Moisture Content	%	1									15.3	7.6	42.4	7.2	23.1	15.8	4.4	11.6	9.3	7.9	9.7	8.4	17.6	6.6	6.7	4.7	9.4
PAH/Phenols (SIM)																											
Benzo(a)pyrene TEQ (LOR)	mg/kg	0.5									1.2	1.2	1.2	1.2	1.2	1.2	1.2	1.2	1.2	1.2	1.2	1.2	1.2	1.2	1.2	1.2	8
Benzo(b+j)fluoranthene	mg/kg	0.5									<0.5	<0.5	<0.5	<0.5	<0.5	<0.5	<0.5	<0.5	<0.5	<0.5	<0.5	<0.5	<0.5	<0.5	<0.5	<0.5	6.4
Benzo(a)pyrene TEQ calc (Half)	mg/kg	0.5									0.6	0.8	0.6	0.6	0.6	0.6	0.6	0.6	0.6	0.6	0.6	0.6	0.6	0.6	0.6	0.6	8
Benzo(a)pyrene TEQ calc (Zero)	mg/kg	0.5									<0.5	0.5	<0.5	<0.5	<0.5	<0.5	<0.5	<0.5	<0.5	<0.5	<0.5	<0.5	<0.5	<0.5	<0.5	<0.5	8
Acenaphthene	mg/kg	0.5									<0.5	<0.5	<0.5	<0.5	<0.5	<0.5	<0.5	<0.5	<0.5	<0.5	<0.5	<0.5	<0.5	<0.5	<0.5	<0.5	<0.5
Acenaphthylene	mg/kg	0.5									<0.5	<0.5	<0.5	<0.5	<0.5	<0.5	<0.5	<0.5	<0.5	<0.5	<0.5	<0.5	<0.5	<0.5	<0.5	<0.5	<0.5
Anthracene	mg/kg	0.5									<0.5	<0.5	<0.5	<0.5	<0.5	<0.5	<0.5	<0.5	<0.5	<0.5	<0.5	<0.5	<0.5	<0.5	<0.5	<0.5	0.9
Benzo(a)anthracene	mg/kg	0.5									<0.5	<0.5	<0.5	<0.5	<0.5	<0.5	<0.5	<0.5	<0.5	<0.5	<0.5	<0.5	<0.5	<0.5	<0.5	<0.5	1.6
Benzo(a)pyrene	mg/kg	0.5			0.7			0.8	**3.2**		<0.5	0.5	<0.5	<0.5	<0.5	<0.5	<0.5	<0.5	<0.5	<0.5	<0.5	<0.5	<0.5	<0.5	<0.5	<0.5	**5.7**
Benzo(ghi)perylene	mg/kg	0.5									<0.5	<0.5	<0.5	<0.5	<0.5	<0.5	<0.5	<0.5	<0.5	<0.5	<0.5	<0.5	<0.5	<0.5	<0.5	<0.5	5.7
Benzo(k)fluoranthene	mg/kg	0.5									<0.5	<0.5	<0.5	<0.5	<0.5	<0.5	<0.5	<0.5	<0.5	<0.5	<0.5	<0.5	<0.5	<0.5	<0.5	<0.5	2.1
Chrysene	mg/kg	0.5									<0.5	<0.5	<0.5	<0.5	<0.5	<0.5	<0.5	<0.5	<0.5	<0.5	<0.5	<0.5	<0.5	<0.5	<0.5	<0.5	2.3
Dibenzo(a,h)anthracene	mg/kg	0.5									<0.5	<0.5	<0.5	<0.5	<0.5	<0.5	<0.5	<0.5	<0.5	<0.5	<0.5	<0.5	<0.5	<0.5	<0.5	<0.5	0.8
Fluoranthene	mg/kg	0.5									<0.5	1.1	<0.5	<0.5	<0.5	<0.5	<0.5	<0.5	<0.5	<0.5	<0.5	<0.5	<0.5	<0.5	<0.5	<0.5	2.9
Fluorene	mg/kg	0.5									<0.5	<0.5	<0.5	<0.5	<0.5	<0.5	<0.5	<0.5	<0.5	<0.5	<0.5	<0.5	<0.5	<0.5	<0.5	<0.5	<0.5
Indeno(1,2,3-cd)pyrene	mg/kg	0.5									<0.5	<0.5	<0.5	<0.5	<0.5	<0.5	<0.5	<0.5	<0.5	<0.5	<0.5	<0.5	<0.5	<0.5	<0.5	<0.5	4.2
Naphthalene (Ex SVOC)	mg/kg	0.5									<0.5	<0.5	<0.5	<0.5	<0.5	<0.5	<0.5	<0.5	<0.5	<0.5	<0.5	<0.5	<0.5	<0.5	<0.5	<0.5	<0.5
PAHs (Sum of total)	mg/kg	0.5	4000								<0.5	3.3	<0.5	<0.5	<0.5	<0.5	<0.5	<0.5	<0.5	<0.5	<0.5	<0.5	<0.5	<0.5	<0.5	<0.5	38.4
Phenanthrene	mg/kg	0.5									<0.5	0.6	<0.5	<0.5	<0.5	<0.5	<0.5	<0.5	<0.5	<0.5	<0.5	<0.5	<0.5	<0.5	<0.5	<0.5	0.6
Pyrene	mg/kg	0.5									<0.5	1.1	<0.5	<0.5	<0.5	<0.5	<0.5	<0.5	<0.5	<0.5	<0.5	<0.5	<0.5	<0.5	<0.5	<0.5	5.2
Total PAH (NSW Waste 2014)	mg/kg							200	**800**		<8	6.3	<8	<8	<8	<8	<8	<8	<8	<8	<8	<8	<8	<8	<8	<8	33.25
Carcinogenic PAHs as B(a)P TPE	mg/kg		40								<1.16	0.83	<1.16	<1.16	<1.16	<1.16	<1.16	<1.16	<1.16	<1.16	<1.16	<1.16	<1.16	<1.16	<1.16	<1.16	7.37
Heavy Metals																											
Mercury	mg/kg	0.1	730					4	**16**		<0.1	<0.1	0.4	0.1	1.7	<0.1	0.4	<0.1	<0.1	<0.1	0.3	<0.1	<0.1	0.4	0.4	<0.1	<0.1
Arsenic	mg/kg	5	3000			160		100	**400**		<5	6	54	6	<5	8	<5	<5	<5	<5	16	12	<5	12	11	7	<5
Cadmium	mg/kg	1	900					20	**80**		<1	<1	3	<1	<1	<1	<1	<1	<1	<1	6	<1	<1	6	6	<1	<1
Chromium (III+VI)	mg/kg	2				320					13	38	28	22	15	19	4	13	20	9	40	36	12	56	53	30	36
Copper	mg/kg	5	240000			85					10	32	158	18	394	32	10	43	21	11	371	76	16	258	249	24	27
Lead	mg/kg	5	1500			1800		100	**400**		11	22	388	24	54	29	7	13	135	35	**557**	222	20	**866**	**799**	21	22
Nickel	mg/kg	2	6000			60		40	**160**		7	36	25	9	10	24	5	22	14	6	84	29	6	49	46	32	33
Zinc	mg/kg	5	400000			330					36	56	2590	47	229	93	36	94	80	37	4120	648	37	3950	4050	73	71
Total Recoverable Hydrocarbons - Semivolatile																											
C10-C16	mg/kg	50					1000				<50	<50	<50	<50	110	<50	<50	<50	<50	<50	<50	<50	<50	<50	<50	<50	<50
C16-C34	mg/kg	100			2500		3500				<100	<100	1220	<100	6460	<100	<100	<100	<100	<100	<100	<100	<100	<100	<100	<100	1600
C34-C40	mg/kg	100			6600		10000				<100	<100	560	<100	320	<100	<100	<100	<100	<100	<100	<100	<100	<100	<100	<100	850
F2-NAPHTHALENE	mg/kg	50		NL	170						<50	<50	<50	<50	110	<50	<50	<50	<50	<50	<50	<50	<50	<50	<50	<50	<50
C10 - C14	mg/kg	50									<50	<50	<50	<50	<50	<50	<50	<50	<50	<50	<50	<50	<50	<50	<50	<50	<50
C15 - C28	mg/kg	100									<100	<100	600	<100	5730	<100	<100	<100	<100	<100	<100	<100	<100	<100	<100	<100	780
C29-C36	mg/kg	100									<100	<100	880	<100	960	<100	<100	<100	<100	<100	<100	<100	<100	<100	<100	<100	1180
+C10 - C36 (Sum of total)	mg/kg	50						10000	**40000**		<50	<50	1480	<50	6690	<50	<50	<50	<50	<50	<50	<50	<50	<50	<50	<50	1960
C10 - C40 (Sum of total)	mg/kg	50									<50	<50	1780	<50	6890	<50	<50	<50	<50	<50	<50	<50	<50	<50	<50	<50	2450
TPH C10-C14 Fraction after Silica Clean	mg/kg	50									-	-	<50	-	<50	-	-	-	-	-	-	-	-	-	-	-	-
TPH C15-C28 Fraction after Silica Clean	mg/kg	100									-	-	<100	-	400	-	-	-	-	-	-	-	-	-	-	-	-
TPH C29-C36 Fraction after Silica Clean	mg/kg	100									-	-	220	-	<100	-	-	-	-	-	-	-	-	-	-	-	-
TRH >C10-C16 (after silica gel clean-up)	mg/kg	50									-	-	<50	-	<50	-	-	-	-	-	-	-	-	-	-	-	-
TRH >C16-C34 (after silica gel clean-up)	mg/kg	100									-	-	270	-	450	-	-	-	-	-	-	-	-	-	-	-	-
TRH >C34-C40 (after silica gel clean-up)	mg/kg	100									-	-	140	-	<100	-	-	-	-	-	-	-	-	-	-	-	-
TRH C10-C36 (Total) (after silica gel cles	mg/kg	50									-	-	220	-	400	-	-	-	-	-	-	-	-	-	-	-	-
>C10 - C16 Fraction minus Naphthalene	mg/kg	50									-	-	<50	-	<50	-	-	-	-	-	-	-	-	-	-	-	-
>C10 - C40 Fraction (sum) (SG)	mg/kg	50									-	-	410	-	450	-	-	-	-	-	-	-	-	-	-	-	-
BTEX and volatile TRHs																											
Benzene	mg/kg	0.2		4	95			10	**40**		<0.2	<0.2	<0.2	<0.2	<0.2	<0.2	<0.2	<0.2	<0.2	<0.2	<0.2	<0.2	<0.2	<0.2	<0.2	<0.2	<0.2
Ethylbenzene	mg/kg	0.5		NL	185			600	**2400**		<0.5	<0.5	<0.5	<0.5	<0.5	<0.5	<0.5	<0.5	<0.5	<0.5	<0.5	<0.5	<0.5	<0.5	<0.5	<0.5	<0.5
Naphthalene	mg/kg	1		NL	370	370					<1	<1	<1	<1	<1	<1	<1	<1	<1	<1	<1	<1	<1	<1	<1	<1	<1
Toluene	mg/kg	0.5		NL	135			288	**1152**		<0.5	<0.5	<0.5	<0.5	<0.5	<0.5	<0.5	<0.5	<0.5	<0.5	<0.5	<0.5	<0.5	<0.5	<0.5	<0.5	<0.5
C6 - C9	mg/kg	10						650	**2600**		<10	<10	<10	<10	<10	<10	<10	<10	<10	<10	<10	<10	<10	<10	<10	<10	<10
Total BTEX	mg/kg	0.2									<0.2	<0.2	<0.2	<0.2	<0.2	<0.2	<0.2	<0.2	<0.2	<0.2	<0.2	<0.2	<0.2	<0.2	<0.2	<0.2	<0.2
Xylene (m & p)	mg/kg	0.5									<0.5	<0.5	<0.5	<0.5	<0.5	<0.5	<0.5	<0.5	<0.5	<0.5	<0.5	<0.5	<0.5	<0.5	<0.5	<0.5	<0.5
Xylene (o)	mg/kg	0.5									<0.5	<0.5	<0.5	<0.5	<0.5	<0.5	<0.5	<0.5	<0.5	<0.5	<0.5	<0.5	<0.5	<0.5	<0.5	<0.5	<0.5
Xylene Total	mg/kg	0.5		NL	95			1000	**4000**		<0.5	<0.5	<0.5	<0.5	<0.5	<0.5	<0.5	<0.5	<0.5	<0.5	<0.5	<0.5	<0.5	<0.5	<0.5	<0.5	<0.5
C6-C10 less BTEX (F1)	mg/kg	10		310	215						<10	<10	<10	<10	<10	<10	<10	<10	<10	<10	<10	<10	<10	<10	<10	<10	<10
C6-C10	mg/kg	10					800				<10	<10	<10	<10	<10	<10	<10	<10	<10	<10	<10	<10	<10	<10	<10	<10	<10

TABLE A1 - RESULTS SUMMARY TABLE SOIL

Analyte	Units	EQL	NEPM 2013 Table 1A(1) HILs Comm/Ind D Soil	NEPM 2013 Table 1A(3) Comm/Ind D Soil HSL for Vapour Intrusion, Clay 0-1m	NEPM 2013 Table 1B(6) ESLs for Comm/Ind, Fine Soil 0-2m	EILs derived according to NEPM 2013 0-2m	NEPM 2013 Table 1B(7) Management Limits Comm / Ind, Fine Soil	NSW 2014 General Solid Waste CT1 (No Leaching)	NSW 2014 Restricted Solid Waste CT2 (No Leaching)	DP1 3.8-4.0	TP24 0.2-0.4	TP25 0.1-0.3	PACM1	PACM2	PACM3	PACM4	PACM5	SS1	SS2	SS3	SS4	SS5	SS6
Field_ID										DP1 3.8-4.0	TP24 0.2-0.4	TP25 0.1-0.3	PACM1	PACM2	PACM3	PACM4	PACM5	SS1	SS2	SS3	SS4	SS5	SS6
LocCode										DP1	TP24	TP25	PACM1	PACM2	PACM3	PACM4	PACM5	SS1	SS2	SS3	SS4	SS5	SS6
Sample_Depth_Range										3.8-4	0.2-0.4	0.1-0.3											
Sampled_Date-Time										22/11/2017	22/11/2017	22/11/2017	22/11/2017	22/11/2017	22/11/2017	22/11/2017	22/11/2017	22/11/2017	22/11/2017	22/11/2017	22/11/2017	23/11/2017	22/11/2017
Matrix_Description																							
Asbestos Classification and Quantitation																							
Weight Used for % Calculation	kg	0.0001								-	-	-	-	-	-	-	-	-	-	-	-	-	-
Asbestos (Fines and Fibrous <7mm)	g	0.0004								-	-	-	-	-	-	-	-	-	-	-	-	-	-
Asbestos (Fines and Fibrous FA+AF)	% (w/w)	0.001								-	-	-	-	-	-	-	-	-	-	-	-	-	-
Asbestos Containing Material	g	0.1								-	-	-	-	-	-	-	-	-	-	-	-	-	-
Asbestos Containing Material	% (w/w)	0.01								-	-	-	-	-	-	-	-	-	-	-	-	-	-
Fibrous Asbestos >7mm	g	0.0004								-	-	-	-	-	-	-	-	-	-	-	-	-	-
Asbestos Identification in Bulk Solids																							
Asbestos Type	-									-	-	-	Ch	Ch + Am + C	Ch + Am + Cr	Ch	-	-	-	-	-	-	-
Asbestos Detected										-	-	-	Yes	Yes	Yes	Yes	-	-	-	-	-	-	-
APPROVED IDENTIFIER:	--									-	-	-	G.Morgan	G.Morgan	G.Morgan	G.Morgan	G.Morgan	-	-	-	-	-	-
Unknown Mineral Fibre Detected	g/kg	0.1								-	-	-	-	-	-	-	Yes	-	-	-	-	-	-
Asbestos Identification in Soils																							
Asbestos Type	-									-	-	-	-	-	-	-	-	-	-	-	-	-	-
Asbestos Detected										-	-	-	-	-	-	-	-	-	-	-	-	-	-
Asbestos (Trace)	Fibres	5								-	-	-	-	-	-	-	-	-	-	-	-	-	-
APPROVED IDENTIFIER:	--									-	-	-	-	-	-	-	-	-	-	-	-	-	-
Moisture Content	%	1								15.3	11.1	8.6	-	-	-	-	-	<1	1.2	9.3	26.2	9.7	11.6
PAH/Phenols (SIM)																							
Benzo(a)pyrene TEQ (LOR)	mg/kg	0.5								1.2	1.2	1.2	-	-	-	-	-	1.2	1.2	1.2	1.2	1.2	1.2
Benzo(b+j)fluoranthene	mg/kg	0.5								<0.5	<0.5	<0.5	-	-	-	-	-	<0.5	<0.5	<0.5	<0.5	<0.5	<0.5
Benzo(a)pyrene TEQ calc (Half)	mg/kg	0.5								0.6	0.6	0.6	-	-	-	-	-	0.6	0.6	0.6	0.6	0.6	0.6
Benzo(a)pyrene TEQ calc (Zero)	mg/kg	0.5								<0.5	<0.5	<0.5	-	-	-	-	-	<0.5	<0.5	<0.5	<0.5	<0.5	<0.5
Acenaphthene	mg/kg	0.5								<0.5	<0.5	<0.5	-	-	-	-	-	<0.5	<0.5	<0.5	<0.5	<0.5	<0.5
Acenaphthylene	mg/kg	0.5								<0.5	<0.5	<0.5	-	-	-	-	-	<0.5	<0.5	<0.5	<0.5	<0.5	<0.5
Anthracene	mg/kg	0.5								<0.5	<0.5	<0.5	-	-	-	-	-	<0.5	<0.5	<0.5	<0.5	<0.5	<0.5
Benzo(a)anthracene	mg/kg	0.5								<0.5	<0.5	<0.5	-	-	-	-	-	<0.5	<0.5	<0.5	<0.5	<0.5	<0.5
Benzo(a)pyrene	mg/kg	0.5			0.7			0.8	**3.2**	<0.5	<0.5	<0.5	-	-	-	-	-	<0.5	<0.5	<0.5	<0.5	<0.5	<0.5
Benzo(ghi)perylene	mg/kg	0.5								<0.5	<0.5	<0.5	-	-	-	-	-	<0.5	<0.5	<0.5	<0.5	<0.5	<0.5
Benzo(k)fluoranthene	mg/kg	0.5								<0.5	<0.5	<0.5	-	-	-	-	-	<0.5	<0.5	<0.5	<0.5	<0.5	<0.5
Chrysene	mg/kg	0.5								<0.5	<0.5	<0.5	-	-	-	-	-	<0.5	<0.5	<0.5	<0.5	<0.5	<0.5
Dibenzo(a,h)anthracene	mg/kg	0.5								<0.5	<0.5	<0.5	-	-	-	-	-	<0.5	<0.5	<0.5	<0.5	<0.5	<0.5
Fluoranthene	mg/kg	0.5								<0.5	<0.5	<0.5	-	-	-	-	-	<0.5	<0.5	<0.5	<0.5	<0.5	<0.5
Fluorene	mg/kg	0.5								<0.5	<0.5	<0.5	-	-	-	-	-	<0.5	<0.5	<0.5	<0.5	<0.5	<0.5
Indeno(1,2,3-cd)pyrene	mg/kg	0.5								<0.5	<0.5	<0.5	-	-	-	-	-	<0.5	<0.5	<0.5	<0.5	<0.5	<0.5
Naphthalene (Ex SVOC)	mg/kg	0.5								<0.5	<0.5	<0.5	-	-	-	-	-	<0.5	<0.5	<0.5	<0.5	<0.5	<0.5
PAHs (Sum of total)	mg/kg	0.5	4000							<0.5	<0.5	<0.5	-	-	-	-	-	<0.5	<0.5	<0.5	<0.5	<0.5	<0.5
Phenanthrene	mg/kg	0.5								<0.5	<0.5	<0.5	-	-	-	-	-	<0.5	<0.5	<0.5	<0.5	<0.5	<0.5
Pyrene	mg/kg	0.5								<0.5	<0.5	<0.5	-	-	-	-	-	<0.5	<0.5	<0.5	<0.5	<0.5	<0.5
Total PAH (NSW Waste 2014)	mg/kg							200	**800**	<8	<8	<8	-	-	-	-	-	<8	<8	<8	<8	<8	<8
Carcinogenic PAHs as B(a)P TPE	mg/kg		40							<1.16	<1.16	<1.16	-	-	-	-	-	<1.16	<1.16	<1.16	<1.16	<1.16	<1.16
Heavy Metals																							
Mercury	mg/kg	0.1	730					4	**16**	<0.1	<0.1	<0.1	-	-	-	-	-	1.8	0.1	<0.1	0.4	<0.1	<0.1
Arsenic	mg/kg	5	3000			160		100	**400**	<5	5	5	-	-	-	-	-	<5	<5	6	5	6	7
Cadmium	mg/kg	1	900					20	**80**	<1	<1	<1	-	-	-	-	-	<1	<1	<1	<1	<1	<1
Chromium (III+VI)	mg/kg	2				320				13	18	12	-	-	-	-	-	3	4	18	16	20	19
Copper	mg/kg	5	240000			85				10	19	18	-	-	-	-	-	10	13	16	93	21	25
Lead	mg/kg	5	1500			1800		100	**400**	11	18	15	-	-	-	-	-	9	16	20	24	87	28
Nickel	mg/kg	2	6000			60		40	**160**	7	14	8	-	-	-	-	-	3	3	7	11	10	10
Zinc	mg/kg	5	400000			330				36	48	31	-	-	-	-	-	42	31	24	95	95	47
Total Recoverable Hydrocarbons - Semivolatile																							
C10-C16	mg/kg	50					1000			<50	<50	<50	-	-	-	-	-	<50	<50	<50	<50	<50	<50
C16-C34	mg/kg	100			2500		3500			<100	<100	<100	-	-	-	-	-	<100	<100	<100	200	<100	<100
C34-C40	mg/kg	100			6600		10000			<100	<100	<100	-	-	-	-	-	<100	<100	<100	<100	<100	<100
F2-NAPHTHALENE	mg/kg	50		NL	170					<50	<50	<50	-	-	-	-	-	<50	<50	<50	<50	<50	<50
C10 - C14	mg/kg	50								<50	<50	<50	-	-	-	-	-	<50	<50	<50	<50	<50	<50
C15 - C28	mg/kg	100								<100	<100	<100	-	-	-	-	-	<100	<100	<100	<100	<100	<100
C29-C36	mg/kg	100								<100	<100	<100	-	-	-	-	-	<100	<100	<100	140	<100	<100
+C10 - C36 (Sum of total)	mg/kg	50						10000	**40000**	<50	<50	<50	-	-	-	-	-	<50	<50	<50	140	<50	<50
C10 - C40 (Sum of total)	mg/kg	50								<50	<50	<50	-	-	-	-	-	<50	<50	<50	200	<50	<50
TPH C10-C14 Fraction after Silica Clean	mg/kg	50								-	-	-	-	-	-	-	-	-	-	-	-	-	-
TPH C15-C28 Fraction after Silica Clean	mg/kg	100								-	-	-	-	-	-	-	-	-	-	-	-	-	-
TPH C29-C36 Fraction after Silica Clean	mg/kg	100								-	-	-	-	-	-	-	-	-	-	-	-	-	-
TRH >C10-C16 (after silica gel clean-up)	mg/kg	50								-	-	-	-	-	-	-	-	-	-	-	-	-	-
TRH >C16-C34 (after silica gel clean-up)	mg/kg	100								-	-	-	-	-	-	-	-	-	-	-	-	-	-
TRH >C34-C40 (after silica gel clean-up)	mg/kg	100								-	-	-	-	-	-	-	-	-	-	-	-	-	-
TRH C10-C36 (Total) (after silica gel cles	mg/kg	50								-	-	-	-	-	-	-	-	-	-	-	-	-	-
>C10 - C16 Fraction minus Naphthalene	mg/kg	50								-	-	-	-	-	-	-	-	-	-	-	-	-	-
>C10 - C40 Fraction (sum) (SG)	mg/kg	50								-	-	-	-	-	-	-	-	-	-	-	-	-	-
BTEX and volatile TRHs																							
Benzene	mg/kg	0.2		4	95			10	**40**	<0.2	<0.2	<0.2	-	-	-	-	-	<0.2	<0.2	<0.2	<0.2	<0.2	<0.2
Ethylbenzene	mg/kg	0.5		NL	185			600	**2400**	<0.5	<0.5	<0.5	-	-	-	-	-	<0.5	<0.5	<0.5	<0.5	<0.5	<0.5
Naphthalene	mg/kg	1		NL	370	370				<1	<1	<1	-	-	-	-	-	<1	<1	<1	<1	<1	<1
Toluene	mg/kg	0.5		NL	135			288	**1152**	<0.5	<0.5	<0.5	-	-	-	-	-	<0.5	<0.5	<0.5	<0.5	<0.5	<0.5
C6 - C9	mg/kg	10						650	**2600**	<10	<10	<10	-	-	-	-	-	<10	<10	<10	<10	<10	<10
Total BTEX	mg/kg	0.2								<0.2	<0.2	<0.2	-	-	-	-	-	<0.2	<0.2	<0.2	<0.2	<0.2	<0.2
Xylene (m & p)	mg/kg	0.5								<0.5	<0.5	<0.5	-	-	-	-	-	<0.5	<0.5	<0.5	<0.5	<0.5	<0.5
Xylene (o)	mg/kg	0.5								<0.5	<0.5	<0.5	-	-	-	-	-	<0.5	<0.5	<0.5	<0.5	<0.5	<0.5
Xylene Total	mg/kg	0.5		NL	95			1000	**4000**	<0.5	<0.5	<0.5	-	-	-	-	-	<0.5	<0.5	<0.5	<0.5	<0.5	<0.5
C6-C10 less BTEX (F1)	mg/kg	10		310	215					<10	<10	<10	-	-	-	-	-	<10	<10	<10	<10	<10	<10
C6-C10	mg/kg	10					800			<10	<10	<10	-	-	-	-	-	<10	<10	<10	<10	<10	<10

TABLE A2 - RESULTS SUMMARY TABLE WATER

										Field_ID	TP3	WS1	FD1	WS2	WS4
										LocCode	TP3	WS1	WS1	WS2	WS4
										WellCode					
										Sampled_Date-Time	22/11/2017	22/11/2017	22/11/2017	22/11/2017	23/11/2017
				ANZECC 2000 FW 95%	NEPM 2013 Table 1A(4) Comm/Ind HSL D GW for Vapour Intrusion, Silt				NEPM 2013 Table 1C GILs, Drinking Water	NEPM 2013 Table 1C GILs, Fresh Waters					
Method_Type	ChemName	Units	EQL		2-4m	4-8m	>8m								
Metals, Ions and Cations	Exchangeable Magnesium	mg/L		-	-	-	-	-	-	3.5	8 - 8.3	-	-	14
	Sulfate as SO4 - Turbidimetric	mg/L	2	-	-	-	-	500	-	15	<2	-	-	7
	Ammonia	mg/L	0.1	0.9	-	-	-	-	0.9	1.1	<0.1	-	-	<0.1
	Arsenic	mg/L	0.01	-	-	-	-	0.01	-	<0.01	<0.01	-	-	<0.01
	Bicarbonate	mg/L	1	-	-	-	-	-	-	130	170	-	-	165
	BOD	mg/L	2	-	-	-	-	-	-	-	<2 - 2	-	-	2
	Cadmium	mg/L	0.0002	0.0002	-	-	-	0.002	0.0002	<0.0002	<0.0002	-	-	<0.0002
	Calcium	mg/L	0.1	-	-	-	-	-	-	2.9	39 - 40	-	-	22
	Chloride	mg/L	1	-	-	-	-	-	-	12	59 - 62	-	-	105
	Chromium (III+VI)	mg/L	0.01	-	-	-	-	-	-	<0.01	<0.01	-	-	<0.01
	Copper	mg/L	0.001	0.0014	-	-	-	2	0.0014	<0.001	<0.001	-	-	<0.001
	Fluoride	mg/L	0.01	-	-	-	-	1.5	-	0.13	0.22 - 0.23	-	-	0.45
	Iron	mg/L	0.01	-	-	-	-	-	-	0.01	0.02 - 0.03	-	-	0.1
	Lead	mg/L	0.001	0.0034	-	-	-	0.01	0.0034	<0.001	<0.001	-	-	<0.001
	Manganese	mg/L	0.01	1.9	-	-	-	0.5	1.9	0.03	<0.01	-	-	<0.01
	Mercury	mg/L	0.0001	0.0006	-	-	-	0.001	0.00006	<0.0001	<0.0001	-	-	<0.0001
	Nitrate (as NO3-)	mg/L	0.1	0.7	-	-	-	50	-	<0.1	<0.1	-	-	<0.1
	Nitrite (as NO2-)	mg/L	0.1	-	-	-	-	3	-	-	<0.1	-	-	<0.1
	Phosphate	µg/L	100	-	-	-	-	-	-	4600	<100	-	-	3300
	Potassium	mg/L	0.1	-	-	-	-	-	-	7.1	6.4 - 6.5	-	-	13
	Sodium	mg/L	1	-	-	-	-	-	-	53	40 - 43	-	-	78
	TDS	mg/L	1	-	-	-	-	-	-	160	245 - 250	-	-	310
	TOC	mg/L	1	-	-	-	-	-	-	115	8	-	-	11
	Zinc	mg/L	0.001	0.008	-	-	-	-	0.008	0.006	0.002 - 0.003	-	-	0.002
TRH - Semivolatile Fraction	C10-C16	mg/L	0.1	-	-	-	-	-	-	72.7	2	<0.1	-	<0.1
	C16-C34	mg/L	0.1	-	-	-	-	-	-	47.6	1.4	0.2	-	<0.1
	C34-C40	mg/L	0.1	-	-	-	-	-	-	1.95	<0.1	<0.1	-	<0.1
	F2-NAPHTHALENE	mg/L	0.1	-	NL	NL	NL	-	-	72.6	2	<0.1	-	<0.1
	C10 - C14	µg/L	50	-	-	-	-	-	-	45,600	1060	<50	-	<50
	C15 - C28	µg/L	100	-	-	-	-	-	-	74,300	2200	140	-	<100
	C29-C36	µg/L	50	-	-	-	-	-	-	2800	60	120	-	<50
	+C10 - C36 (Sum of total)	µg/L	50	-	-	-	-	-	-	123,000	3320	260	-	<50
	C10 - C40 (Sum of total)	µg/L	100	-	-	-	-	-	-	122,000	3400	200	-	<100
TRH - Total Recoverable Hydrocarbons - Silica Gel	TPH C10-C14 Fraction after Silica Cleanup	mg/L	0.05	-	-	-	-	-	-	-	0.48	-	-	-
	TPH C15-C28 Fraction after Silica Cleanup	mg/L	0.1	-	-	-	-	-	-	-	0.83	-	-	-
	TPH C29-C36 Fraction after Silica Cleanup	mg/L	0.05	-	-	-	-	-	-	-	<0.05	-	-	-
	TRH >C10-C16 (after silica gel clean-up)	mg/L	0.1	-	-	-	-	-	-	-	0.82	-	-	-
	TRH >C16-C34 (after silica gel clean-up)	mg/L	0.1	-	-	-	-	-	-	-	0.47	-	-	-
	TRH >C34-C40 (after silica gel clean-up)	mg/L	0.1	-	-	-	-	-	-	-	<0.1	-	-	-
	TRH C10-C36 (Total) (after silica gel clean-up)	mg/L	0.05	-	-	-	-	-	-	-	1.31	-	-	-
TRH Volatiles/BTEX	Benzene	µg/L	1	950	30000	30000	30000	1	950	<1	<1	<1	-	<1
	Ethylbenzene	µg/L	2	-	NL	NL	NL	300	-	6	<2	<2	-	<2
	Naphthalene	mg/L	0.005	0.016	NL	NL	NL	-	0.016	0.048	<0.005	<0.005	-	<0.005
	Toluene	µg/L	2	-	NL	NL	NL	800	-	11	<2	<2	-	<2
	C6 - C9	µg/L	20	-	-	-	-	-	-	160	<20	<20	-	<20
	Total BTEX	mg/L	0.001	-	-	-	-	-	-	0.079	<0.001	<0.001	-	<0.001
	Xylene (m & p)	µg/L	2	-	-	-	-	-	-	47	<2	<2	-	<2
	Xylene (o)	µg/L	2	350	-	-	-	-	350	15	<2	<2	-	<2
	Xylene Total	µg/L	2	-	NL	NL	NL	600	-	62	<2	<2	-	<2
	C6-C10 less BTEX (F1)	mg/L	0.02	-	NL	NL	NL	-	-	0.26	<0.02	<0.02	-	<0.02
	C6-C10	mg/L	0.02	-	-	-	-	-	-	0.34	<0.02	<0.02	-	<0.02

TABLE B1 - RESULTS SUMMARY FOR REUSE (SOIL)

Environmental Earth Sciences Sample ID:									TP1-1	TP2-1	TP2-2	TP3-1	TP4-1	TP5-1	TP6-1	STP1-1	STP2-1	STP2-2	STP3-2	STP4-1	DTP2-1	DTP4-1	SBH1	SBH2	SBH3	SBH4	SBH5	SBH6	SBH7	BH1	BH2	BH3	BH4	BH5
Sample Depth (m):									0.6m	0.1m	0.25m	0.30m	0.30m	0.30m	0.20m	Stockpile	Stockpile	Stockpile	Stockpile	Stockpile	Levee wall	Levee wall	Stockpile	Stockpile	Stockpile	Stockpile	Stockpile	Stockpile	Stockpile	Access road	Access road	Access road	Access road	Access road
Lab Batch ID:									195714	195714	195714	195714	195714	195714	195714	195714	195714	195714	195714	195714	195714	195714	195714	195714	195714	195714	195714	195714	195714	195714	195714	195714	195714	195714
Sample date:									29-Jun-18	29-Jun-18	29-Jun-18	29-Jun-18	29-Jun-18	29-Jun-18	29-Jun-18	29-Jun-18	29-Jun-18	29-Jun-18	29-Jun-18	29-Jun-18	29-Jun-18	29-Jun-18	02-Jul-18	02-Jul-18	02-Jul-18	02-Jul-18	02-Jul-18	02-Jul-18	02-Jul-18	02-Jul-18	02-Jul-18	02-Jul-18	02-Jul-18	02-Jul-18
Analyte grouping/Analyte	**Units**	**LOR**	**HIL-D**	**HSL D 0 - <1m**	**HSL D 1 - <2m**	**ML**	**ESL**	**EIL**																										
Moisture Content																																		
Moisture content	%	0.1	----	----	----	----	----	----	**8.4**	12	14	10	13	14	9.1	10	11	7.7	5.9	12	13	12	12	14	12	14	14	16	9.2	9.3	9	10	13
Heavy Metals																																		
Arsenic	mg/kg	4	3,000	----	----	----	----	40	5	<4	5	5	<4	<4	6	5	6	5	<4	5	5	5	5	6	6	7	6	<4	6	<4	9	5	6	4
Cadmium	mg/kg	0.4	900	----	----	----	----	----	<0.4	<0.4	<0.4	<0.4	<0.4	<0.4	<0.4	<0.4	<0.4	<0.4	<0.4	<0.4	<0.4	<0.4	<0.4	**0.8**	<0.4	**0.8**	<0.4	<0.4	<0.4	<0.4	<0.4	<0.4	<0.4	<0.4
Chromium (total) **	mg/kg	1	3,600	----	----	----	----	75	**15**	**9**	**9**	**9**	**8**	15	**10**	**15**	**22**	**14**	**9**	**18**	**13**	**13**	**15**	**23**	**17**	**21**	**21**	**14**	**19**	**12**	**16**	**15**	**15**	**17**
Copper	mg/kg	1	240,000	----	----	----	----	50	**19**	**25**	**39**	**30**	**30**	**26**	**15**	**23**	**21**	**23**	**85**	**30**	**24**	**25**	**27**	65	**24**	**49**	72	**12**	**12**	**17**	**11**	**11**	**26**	**11**
Lead	mg/kg	1	1.5	----	----	----	----	630	**25**	**31**	**17**	**12**	**12**	**13**	**17**	**15**	**19**	**24**	**9**	**41**	**14**	**16**	**27**	**280**	**130**	**210**	**160**	**24**	**42**	**16**	**15**	**18**	**19**	**13**
Nickel	mg/kg	1	6,000	----	----	----	----	35	**12**	**10**	**18**	**15**	**12**	**17**	**8**	**11**	**11**	**15**	**10**	**20**	**12**	**12**	**18**	**18**	**7**	**12**	**11**	**6**	**4**	**10**	**8**	**7**	**16**	**5**
Zinc	mg/kg	1	400,000	----	----	----	----	135	**68**	**58**	**62**	**52**	**43**	**43**	**48**	**42**	**49**	**38**	**36**	**50**	**40**	**39**	**48**	**360**	**130**	**340**	**270**	**17**	**41**	**37**	**30**	**28**	**48**	**12**
Mercury	mg/kg	0.1	730	----	----	----	----	----	<0.1	<0.1	<0.1	<0.1	<0.1	<0.1	<0.1	<0.1	<0.1	<0.1	<0.1	<0.1	<0.1	<0.1	<0.1	**0.2**	<0.1	**0.2**	**0.2**	<0.1	<0.1	<0.1	<0.1	<0.1	<0.1	<0.1
Polycyclic Aromatic Hydrocarbons																																		
Naphthalene	mg/kg	0.1	----	NL	NL	----	----	10	<0.1	<0.1	<0.1	<0.1	<0.1	<0.1	<0.1	<0.1	<0.1	<0.1	<0.1	<0.1	<0.1	<0.1	<0.1	**0.3**	**0.1**	**0.2**	**0.4**	<0.1	<0.1	<0.1	<0.1	<0.1	<0.1	<0.1
Acenaphthylene	mg/kg	0.1	----	----	----	----	----	----	<0.1	<0.1	<0.1	<0.1	<0.1	<0.1	<0.1	<0.1	<0.1	<0.1	<0.1	<0.1	<0.1	<0.1	<0.1	**0.8**	**0.4**	**0.9**	**1.1**	<0.1	<0.1	<0.1	<0.1	<0.1	<0.1	<0.1
Acenaphthene	mg/kg	0.1	----	----	----	----	----	----	<0.1	<0.1	<0.1	<0.1	<0.1	<0.1	<0.1	<0.1	<0.1	<0.1	<0.1	<0.1	<0.1	<0.1	<0.1	<0.1	<0.1	<0.1	<0.1	<0.1	<0.1	<0.1	<0.1	<0.1	<0.1	<0.1
Fluorene	mg/kg	0.1	----	----	----	----	----	----	<0.1	<0.1	<0.1	<0.1	<0.1	<0.1	<0.1	<0.1	<0.1	<0.1	<0.1	<0.1	<0.1	<0.1	<0.1	**0.2**	<0.1	**0.2**	**0.3**	<0.1	<0.1	<0.1	<0.1	<0.1	<0.1	<0.1
Phenanthrene	mg/kg	0.1	----	----	----	----	----	----	<0.1	<0.1	<0.1	<0.1	<0.1	<0.1	<0.1	<0.1	<0.1	**0.1**	<0.1	<0.1	<0.1	<0.1	**0.3**	**4.1**	**1.7**	**4.8**	**6.6**	**0.2**	**0.1**	**0.1**	<0.1	<0.1	**0.1**	<0.1
Anthracene	mg/kg	0.1	----	----	----	----	----	----	<0.1	<0.1	<0.1	<0.1	<0.1	<0.1	<0.1	<0.1	<0.1	<0.1	<0.1	<0.1	<0.1	<0.1	<0.1	**1**	**0.3**	**1.1**	**1.7**	<0.1	<0.1	<0.1	<0.1	<0.1	<0.1	<0.1
Fluoranthene	mg/kg	0.1	----	----	----	----	----	----	<0.1	<0.1	<0.1	<0.1	<0.1	<0.1	<0.1	**0.1**	**0.1**	**0.2**	<0.1	**0.1**	<0.1	<0.1	**0.7**	**10**	**3.8**	**12**	**18**	**0.5**	**0.4**	**0.3**	**0.3**	<0.1	**0.3**	<0.1
Pyrene	mg/kg	0.1	----	----	----	----	----	----	<0.1	<0.1	<0.1	<0.1	<0.1	<0.1	<0.1	**0.1**	<0.1	**0.2**	<0.1	<0.1	<0.1	<0.1	**0.6**	**11**	**3.9**	**13**	**19**	**0.5**	**0.5**	**0.2**	**0.2**	<0.1	**0.3**	<0.1
Benz(a)anthracene	mg/kg	0.1	----	----	----	----	----	----	<0.1	<0.1	<0.1	<0.1	<0.1	<0.1	<0.1	<0.1	<0.1	**0.1**	<0.1	<0.1	<0.1	<0.1	**0.2**	**6.5**	**2**	**7.5**	**12**	**0.3**	**0.2**	**0.1**	**0.1**	<0.1	**0.1**	<0.1
Chrysene	mg/kg	0.1	----	----	----	----	----	----	<0.1	<0.1	<0.1	<0.1	<0.1	<0.1	<0.1	<0.1	<0.1	**0.1**	<0.1	<0.1	<0.1	<0.1	**0.3**	**4.7**	**1.8**	**5.8**	**8.6**	**0.3**	**0.3**	**0.1**	**0.1**	<0.1	**0.1**	<0.1
Benzo(b+j+k)fluoranthene	mg/kg	0.2	----	----	----	----	----	----	<0.2	<0.2	<0.2	<0.2	<0.2	<0.2	<0.2	<0.2	<0.2	**0.3**	<0.2	<0.2	<0.2	<0.2	**0.6**	**9.8**	**3.5**	**12**	**16**	**0.5**	**0.5**	**0.3**	**0.3**	<0.2	**0.2**	<0.2
Benzo(a)pyrene	mg/kg	0.05	----	----	----	----	1.4	----	<0.05	<0.05	<0.05	<0.05	<0.05	<0.05	<0.05	**0.06**	<0.05	**0.1**	<0.05	<0.05	<0.05	<0.05	**0.3**	**6.5**	**2.3**	**8.3**	**11**	**0.3**	**0.3**	**0.1**	**0.1**	<0.05	**0.1**	<0.05
Indeno(1.2.3.cd)pyrene	mg/kg	0.1	----	----	----	----	----	----	<0.1	<0.1	<0.1	<0.1	<0.1	<0.1	<0.1	<0.1	<0.1	**0.1**	<0.1	<0.1	<0.1	<0.1	**0.2**	**2.8**	**1**	**3.4**	**4.5**	**0.2**	**0.2**	**0.1**	<0.1	<0.1	**0.1**	<0.1
Dibenz(a.h)anthracene	mg/kg	0.1	----	----	----	----	----	----	<0.1	<0.1	<0.1	<0.1	<0.1	<0.1	<0.1	<0.1	<0.1	<0.1	<0.1	<0.1	<0.1	<0.1	<0.1	**0.6**	**0.2**	**0.7**	**0.9**	<0.1	<0.1	<0.1	<0.1	<0.1	<0.1	<0.1
Benzo(g.h.i)perylene	mg/kg	0.1	----	----	----	----	----	----	<0.1	<0.1	<0.1	<0.1	<0.1	<0.1	<0.1	<0.1	<0.1	**0.2**	<0.1	<0.1	<0.1	<0.1	**0.3**	**3.4**	**1.3**	**4.1**	**5.3**	**0.2**	**0.2**	**0.2**	**0.1**	<0.1	**0.1**	<0.1
BaP TEQ	mg/kg	----	40	----	----	----	----	----	<0.5	<0.5	<0.5	<0.5	<0.5	<0.5	<0.5	<0.5	<0.5	<0.5	<0.5	<0.5	<0.5	<0.5	<0.5	**9.1**	**3.2**	**11**	**16**	<0.5	<0.5	<0.5	<0.5	<0.5	<0.5	<0.5
Sum of PAHs	mg/kg	----	4,000	----	----	----	----	----	<LOR	<LOR	<LOR	<LOR	<LOR	<LOR	<LOR	**0.26**	**0.1**	**1.4**	<LOR	**0.1**	<LOR	<LOR	**3.5**	**61.7**	**22.3**	**74**	**105.4**	**3**	**2.7**	**1.5**	**1.2**	<LOR	**1.4**	<LOR
Organochlorine Pesticides																																		
HCB	mg/kg	0.1	80	----	----	----	----	----	<0.1	<0.1	<0.1	<0.1	<0.1	<0.1	<0.1	<0.1	<0.1	<0.1	<0.1	<0.1	<0.1	<0.1	<0.1	<0.1	<0.1	<0.1	<0.1	<0.1	<0.1	<0.1	<0.1	<0.1	<0.1	<0.1
alpha-BHC	mg/kg	0.1	----	----	----	----	----	----	<0.1	<0.1	<0.1	<0.1	<0.1	<0.1	<0.1	<0.1	<0.1	<0.1	<0.1	<0.1	<0.1	<0.1	<0.1	<0.1	<0.1	<0.1	<0.1	<0.1	<0.1	<0.1	<0.1	<0.1	<0.1	<0.1
gamma-BHC	mg/kg	0.1	----	----	----	----	----	----	<0.1	<0.1	<0.1	<0.1	<0.1	<0.1	<0.1	<0.1	<0.1	<0.1	<0.1	<0.1	<0.1	<0.1	<0.1	<0.1	<0.1	<0.1	<0.1	<0.1	<0.1	<0.1	<0.1	<0.1	<0.1	<0.1
beta-BHC	mg/kg	0.1	----	----	----	----	----	----	<0.1	<0.1	<0.1	<0.1	<0.1	<0.1	<0.1	<0.1	<0.1	<0.1	<0.1	<0.1	<0.1	<0.1	<0.1	<0.1	<0.1	<0.1	<0.1	<0.1	<0.1	<0.1	<0.1	<0.1	<0.1	<0.1
Heptachlor	mg/kg	0.1	50	----	----	----	----	----	<0.1	<0.1	<0.1	<0.1	<0.1	<0.1	<0.1	<0.1	<0.1	<0.1	<0.1	<0.1	<0.1	<0.1	<0.1	<0.1	<0.1	<0.1	<0.1	<0.1	<0.1	<0.1	<0.1	<0.1	<0.1	<0.1
delta-BHC	mg/kg	0.1	----	----	----	----	----	----	<0.1	<0.1	<0.1	<0.1	<0.1	<0.1	<0.1	<0.1	<0.1	<0.1	<0.1	<0.1	<0.1	<0.1	<0.1	<0.1	<0.1	<0.1	<0.1	<0.1	<0.1	<0.1	<0.1	<0.1	<0.1	<0.1
Aldrin	mg/kg	0.1	----	----	----	----	----	----	<0.1	<0.1	<0.1	<0.1	<0.1	<0.1	<0.1	<0.1	<0.1	<0.1	<0.1	<0.1	<0.1	<0.1	<0.1	<0.1	<0.1	<0.1	<0.1	<0.1	<0.1	<0.1	<0.1	<0.1	<0.1	<0.1
Heptachlor Epoxide	mg/kg	0.1	----	----	----	----	----	----	<0.1	<0.1	<0.1	<0.1	<0.1	<0.1	<0.1	<0.1	<0.1	<0.1	<0.1	<0.1	<0.1	<0.1	<0.1	<0.1	<0.1	<0.1	<0.1	<0.1	<0.1	<0.1	<0.1	<0.1	<0.1	<0.1
gamma-Chlordane	mg/kg	0.1	530	----	----	----	----	----	<0.1	<0.1	<0.1	<0.1	<0.1	<0.1	<0.1	<0.1	<0.1	<0.1	<0.1	<0.1	<0.1	<0.1	<0.1	<0.1	<0.1	<0.1	<0.1	<0.1	<0.1	<0.1	<0.1	<0.1	<0.1	<0.1
alpha-chlordane	mg/kg	0.1		----	----	----	----	----	<0.1	<0.1	<0.1	<0.1	<0.1	<0.1	<0.1	<0.1	<0.1	<0.1	<0.1	<0.1	<0.1	<0.1	<0.1	<0.1	<0.1	<0.1	<0.1	<0.1	<0.1	<0.1	<0.1	<0.1	<0.1	<0.1
pp-DDE	mg/kg	0.1	----	----	----	----	----	----	<0.1	<0.1	<0.1	<0.1	<0.1	<0.1	<0.1	<0.1	<0.1	<0.1	<0.1	<0.1	<0.1	<0.1	<0.1	<0.1	<0.1	<0.1	<0.1	<0.1	<0.1	<0.1	<0.1	<0.1	<0.1	<0.1
Dieldrin	mg/kg	0.1	----	----	----	----	----	----	<0.1	<0.1	<0.1	<0.1	<0.1	<0.1	<0.1	<0.1	<0.1	<0.1	<0.1	<0.1	<0.1	<0.1	<0.1	<0.1	<0.1	<0.1	<0.1	<0.1	<0.1	<0.1	<0.1	<0.1	<0.1	<0.1
Endrin	mg/kg	0.1	100	----	----	----	----	----	<0.1	<0.1	<0.1	<0.1	<0.1	<0.1	<0.1	<0.1	<0.1	<0.1	<0.1	<0.1	<0.1	<0.1	<0.1	<0.1	<0.1	<0.1	<0.1	<0.1	<0.1	<0.1	<0.1	<0.1	<0.1	<0.1
pp-DDD	mg/kg	0.1	----	----	----	----	----	----	<0.1	<0.1	<0.1	<0.1	<0.1	<0.1	<0.1	<0.1	<0.1	<0.1	<0.1	<0.1	<0.1	<0.1	<0.1	<0.1	<0.1	<0.1	<0.1	<0.1	<0.1	<0.1	<0.1	<0.1	<0.1	<0.1
Endosulfan I	mg/kg	0.1	2,000	----	----	----	----	----	<0.1	<0.1	<0.1	<0.1	<0.1	<0.1	<0.1	<0.1	<0.1	<0.1	<0.1	<0.1	<0.1	<0.1	<0.1	<0.1	<0.1	<0.1	<0.1	<0.1	<0.1	<0.1	<0.1	<0.1	<0.1	<0.1
Endosulfan II	mg/kg	0.1		----	----	----	----	----	<0.1	<0.1	<0.1	<0.1	<0.1	<0.1	<0.1	<0.1	<0.1	<0.1	<0.1	<0.1	<0.1	<0.1	<0.1	<0.1	<0.1	<0.1	<0.1	<0.1	<0.1	<0.1	<0.1	<0.1	<0.1	<0.1
Endosulfan Sulphate	mg/kg	0.1		----	----	----	----	----	<0.1	<0.1	<0.1	<0.1	<0.1	<0.1	<0.1	<0.1	<0.1	<0.1	<0.1	<0.1	<0.1	<0.1	<0.1	<0.1	<0.1	<0.1	<0.1	<0.1	<0.1	<0.1	<0.1	<0.1	<0.1	<0.1
pp-DDT	mg/kg	0.1	----	----	----	----	----	----	<0.1	<0.1	<0.1	<0.1	<0.1	<0.1	<0.1	<0.1	<0.1	<0.1	<0.1	<0.1	<0.1	<0.1	<0.1	<0.1	<0.1	<0.1	<0.1	<0.1	<0.1	<0.1	<0.1	<0.1	<0.1	<0.1
Endrin Aldehyde	mg/kg	0.1	----	----	----	----	----	----	<0.1	<0.1	<0.1	<0.1	<0.1	<0.1	<0.1	<0.1	<0.1	<0.1	<0.1	<0.1	<0.1	<0.1	<0.1	<0.1	<0.1	<0.1	<0.1	<0.1	<0.1	<0.1	<0.1	<0.1	<0.1	<0.1
Methoxychlor	mg/kg	0.1	2,500	----	----	----	----	----	<0.1	<0.1	<0.1	<0.1	<0.1	<0.1	<0.1	<0.1	<0.1	<0.1	<0.1	<0.1	<0.1	<0.1	<0.1	<0.1	<0.1	<0.1	<0.1	<0.1	<0.1	<0.1	<0.1	<0.1	<0.1	<0.1
Total +ve Aldrin + Dieldrin	mg/kg	0.1	45	----	----	----	----	----	<LOR	<LOR	<LOR	<LOR	<LOR	<LOR	<LOR	<LOR	<LOR	<LOR	<LOR	<LOR	<LOR	<LOR	<LOR	<LOR	<LOR	<LOR	<LOR	<LOR	<LOR	<LOR	<LOR	<LOR	<LOR	<LOR
Total +ve DDT+DDD+DDE	mg/kg	0.1	3,600	----	----	----	----	----	<LOR	<LOR	<LOR	<LOR	<LOR	<LOR	<LOR	<LOR	<LOR	<LOR	<LOR	<LOR	<LOR	<LOR	<LOR	<LOR	<LOR	<LOR	<LOR	<LOR	<LOR	<LOR	<LOR	<LOR	<LOR	<LOR
Organophosphorous Pesticides																																		
Azinphos-methyl (Guthion)	mg/kg	0.1	----	----	----	----	----	----	<0.1	<0.1	<0.1	<0.1	<0.1	<0.1	<0.1	<0.1	<0.1	<0.1	<0.1	<0.1	<0.1	<0.1	<0.1	<0.1	<0.1	<0.1	<0.1	<0.1	<0.1	<0.1	<0.1	<0.1	<0.1	<0.1
Bromophos-ethyl	mg/kg	0.1	----	----	----	----	----	----	<0.1	<0.1	<0.1	<0.1	<0.1	<0.1	<0.1	<0.1	<0.1	<0.1	<0.1	<0.1	<0.1	<0.1	<0.1	<0.1	<0.1	<0.1	<0.1	<0.1	<0.1	<0.1	<0.1	<0.1	<0.1	<0.1
Chlorpyriphos	mg/kg	0.1	2,000	----	----	----	----	----	<0.1	<0.1	<0.1	<0.1	<0.1	<0.1	<0.1	<0.1	<0.1	<0.1	<0.1	<0.1	<0.1	<0.1	<0.1	<0.1	<0.1	<0.1	<0.1	<0.1	<0.1	<0.1	<0.1	<0.1	<0.1	<0.1
Chlorpyriphos-methyl	mg/kg	0.1	----	----	----	----	----	----	<0.1	<0.1	<0.1	<0.1	<0.1	<0.1	<0.1	<0.1	<0.1	<0.1	<0.1	<0.1	<0.1	<0.1	<0.1	<0.1	<0.1	<0.1	<0.1	<0.1	<0.1	<0.1	<0.1	<0.1	<0.1	<0.1
Diazinon	mg/kg	0.1	----	----	----	----	----	----	<0.1	<0.1	<0.1	<0.1	<0.1	<0.1	<0.1	<0.1	<0.1	<0.1	<0.1	<0.1	<0.1	<0.1	<0.1	<0.1	<0.1	<0.1	<0.1	<0.1	<0.1	<0.1	<0.1	<0.1	<0.1	<0.1
Dichlorvos	mg/kg	0.1	----	----	----	----	----	----	<0.1	<0.1	<0.1	<0.1	<0.1	<0.1	<0.1	<0.1	<0.1	<0.1	<0.1	<0.1	<0.1	<0.1	<0.1	<0.1	<0.1	<0.1	<0.1	<0.1	<0.1	<0.1	<0.1	<0.1	<0.1	<0.1
Dimethoate	mg/kg	0.1	----	----	----	----	----	----	<0.1	<0.1	<0.1	<0.1	<0.1	<0.1	<0.1	<0.1	<0.1	<0.1	<0.1	<0.1	<0.1	<0.1	<0.1	<0.1	<0.1	<0.1	<0.1	<0.1	<0.1	<0.1	<0.1	<0.1	<0.1	<0.1
Ethion	mg/kg	0.1	----	----	----	----	----	----	<0.1	<0.1	<0.1	<0.1	<0.1	<0.1	<0.1	<0.1	<0.1	<0.1	<0.1	<0.1	<0.1	<0.1	<0.1	<0.1	<0.1	<0.1	<0.1	<0.1	<0.1	<0.1	<0.1	<0.1	<0.1	<0.1
Fenitrothion	mg/kg	0.1	----	----	----	----	----	----	<0.1	<0.1	<0.1	<0.1	<0.1	<0.1	<0.1	<0.1	<0.1	<0.1	<0.1	<0.1	<0.1	<0.1	<0.1	<0.1	<0.1	<0.1	<0.1	<0.1	<0.1	<0.1	<0.1	<0.1	<0.1	<0.1
Malathion	mg/kg	0.1	----	----	----	----	----	----	<0.1	<0.1	<0.1	<0.1	<0.1	<0.1	<0.1	<0.1	<0.1	<0.1	<0.1	<0.1	<0.1	<0.1	<0.1	<0.1	<0.1	<0.1	<0.1	<0.1	<0.1	<0.1	<0.1	<0.1	<0.1	<0.1
Parathion	mg/kg	0.1	----	----	----	----	----	----	<0.1	<0.1	<0.1	<0.1	<0.1	<0.1	<0.1	<0.1	<0.1	<0.1	<0.1	<0.1	<0.1	<0.1	<0.1	<0.1	<0.1	<0.1	<0.1	<0.1	<0.1	<0.1	<0.1	<0.1	<0.1	<0.1
Ronnel	mg/kg	0.1	----	----	----	----	----	----	<0.1	<0.1	<0.1	<0.1	<0.1	<0.1	<0.1	<0.1	<0.1	<0.1	<0.1	<0.1	<0.1	<0.1	<0.1	<0.1	<0.1	<0.1	<0.1	<0.1	<0.1	<0.1	<0.1	<0.1	<0.1	<0.1
BTEX																																		
Benzene	mg/kg	0.2	----	4	6	----	95	----	<0.2	<0.2	<0.2	<0.2	<0.2	<0.2	<0.2	<0.2	<0.2	<0.2	<0.2	<0.2	<0.2	<0.2	<0.2	<0.2	<0.2	<0.2	<0.2	<0.2	<0.2	<0.2	<0.2	<0.2	<0.2	<0.2
Toluene	mg/kg	0.5	----	NL	NL	----	135	----	<0.5	<0.5	<0.5	<0.5	<0.5	<0.5	<0.5	<0.5	<0.5	<0.5	<0.5	<0.5	<0.5	<0.5	<0.5	<0.5	<0.5	<0.5	<0.5	<0.5	<0.5	<0.5	<0.5	<0.5	<0.5	<0.5
Ethylbenzene	mg/kg	1	----	NL	NL	----	185	----	<1	<1	<1	<1	<1	<1	<1	<1	<1	<1	<1	<1	<1	<1	<1	<1	<1	<1	<1	<1	<1	<1	<1	<1	<1	<1
meta- & para-Xylene	mg/kg	2	----	----	----	----	----	----	<2	<2	<2	<2	<2	<2	<2	<2	<2	<2	<2	<2	<2	<2	<2	<2	<2	<2	<2	<2	<2	<2	<2	<2	<2	<2
ortho-Xylene	mg/kg	1	----	----	----	----	----	----	<1	<1	<1	<1	<1	<1	<1	<1	<1	<1	<1	<1	<1	<1	<1	<1	<1	<1	<1	<1	<1	<1	<1	<1	<1	<1
Total Xylenes	mg/kg	----	----	NL	NL	----	95	----	<LOR	<LOR	<LOR	<LOR	<LOR	<LOR	<LOR	<LOR	<LOR	<LOR	<LOR	<LOR	<LOR	<LOR	<LOR	<LOR	<LOR	<LOR	<LOR	<LOR	<LOR	<LOR	<LOR	<LOR	<LOR	<LOR
Total Petroleum Hydrocarbons																																		
TRH C6 - C10	mg/kg	25	----	----	----	700	215	----	<25	<25	<25	<25	<25	<25	<25	<25	<25	<25	<25	<25	<25	<25	<25	<25	<25	<25	<25	<25	<25	<25	<25	<25	<25	<25
TPH C6 - C10 less BTEX (F1)	mg/kg	25	----	260	370	----	----	----	<25	<25	<25	<25	<25	<25	<25	<25	<25	<25	<25	<25	<25	<25	<25	<25	<25	<25	<25	<25	<25	<25	<25	<25	<25	<25
TRH > C10-C16	mg/kg	50	----	----	----	1,000	170	----	<50	<50	<50	<50	<50	<50	<50	<50	<50	<50	<50	<50	<50	<50	<50	<50	<50	<50	<50	<50	<50	<50	<50	<50	<50	<50
TRH > C10 - C16 less Naphthalene (F2)	mg/kg	50	----	NL	NL	----	----	----	<50	<50	<50	<50	<50	<50	<50	<50	<50	<50	<50	<50	<50	<50	<50	<50	<50	<50	<50	<50	<50	<50	<50	<50	<50	<50
TRH > C16-C34	mg/kg	100	----	----	----	5,000	2,500	----	<100	<100	<100	<100	<100	<100	<100	<100	<100	<100	<100	<100	<100	<100	<100	**220**	<100	**250**	**370**	<100	<100	<100	<100	<100	<100	<100
TRH > C34-C40	mg/kg	100	----	----	----	10,000	6,600	----	<100	<100	<100	<100	<100	<100	<100	<100	<100	<100	<100	<100	<100	<100	<100	<100	<100	<100	<100	<100	<100	<100	<100	<100	<100	<100

Notes:

LOR	Laboratory limit of reporting
mg/kg	Milligrams per kilogram
HIL	Health Investigation Level for commercial / industrial land use scenario 'D' (ASC NEPM, 2013)
HSL	Health Screening Level for commercial / industrial land use scenario 'D' (ASC NEPM, 2013) (sand matrix)
ESL	Ecological screening level in commercial / industrial land use scenario. Coarse textured soils (ASC NEPM, 2013)
EIL	Ecological investigation level in commercial / industrial land use scenario (ASC NEPM, 2013)
ML	Management limit in commercial / industrial land use scenario (ASC NEPM, 2013)
NL	No risk-based limits derived for this contaminant
**	Criteria for Chomium VI adopted for total chromium
	Shaded results equal exceedance of particular criteria

TABLE B1 - RESULTS SUMMARY FOR REUSE (SOIL)

Environmental Earth Sciences Sample ID:									BH6	BH7	COMP-1	COMP-2	COMP-3	COMP-4	COMP-5	COMP-6	COMP-7	COMP-8	COMP-9
Sample Depth (m):									Access road	Access road	East offset	East offset	East offset	East offset	East offset	East offset	West offset	West offset	West offset
Lab Batch ID:									195714	195714	195714	195714	195714	195714	195714	195714	195714	195714	195714
Sample date:									02-Jul-18	02-Jul-18	02-Jul-18	02-Jul-18	02-Jul-18	02-Jul-18	02-Jul-18	02-Jul-18	02-Jul-18	02-Jul-18	02-Jul-18
Analyte grouping/Analyte	**Units**	**LOR**	**HIL-D**	**HSL D 0 - <1m**	**HSL D 1 - <2m**	**ML**	**ESL**	**EIL**											
Moisture Content																			
Moisture content	%	0.1	----	----	----	----	----	----	**9.4**	**15**	**30**	**18**	**12**	**21**	**13**	**14**	**13**	**20**	**20**
Heavy Metals																			
Arsenic	mg/kg	4	3,000	----	----	----	----	40	<4	**4**	**4**	**5**	**5**	**4**	<4	**5**	**4**	**6**	**5**
Cadmium	mg/kg	0.4	900	----	----	----	----	----	<0.4	<0.4	<0.4	<0.4	<0.4	<0.4	<0.4	<0.4	<0.4	<0.4	<0.4
Chromium (total) **	mg/kg	1	3,600	----	----	----	----	75	**10**	**13**	**12**	**16**	**15**	**17**	**10**	**16**	**15**	**17**	**16**
Copper	mg/kg	1	240,000	----	----	----	----	50	**10**	**18**	**26**	**7**	**8**	**17**	**6**	**27**	**10**	**14**	**18**
Lead	mg/kg	1	1.5	----	----	----	----	630	**11**	**18**	**17**	**14**	**22**	**17**	**11**	**19**	**26**	**19**	**16**
Nickel	mg/kg	1	6,000	----	----	----	----	35	**6**	**7**	**12**	**5**	**5**	**8**	**5**	**16**	**6**	**6**	**7**
Zinc	mg/kg	1	400,000	----	----	----	----	135	**13**	**36**	**59**	**11**	**16**	**23**	**10**	**47**	**18**	**29**	**28**
Mercury	mg/kg	0.1	730	----	----	----	----	----	<0.1	<0.1	<0.1	<0.1	<0.1	<0.1	<0.1	<0.1	<0.1	<0.1	<0.1
Polycyclic Aromatic Hydrocarbons																			
Naphthalene	mg/kg	0.1	----	NL	NL	----	----	10	<0.1	<0.1	<0.1	<0.1	<0.1	<0.1	<0.1	<0.1	<0.1	<0.1	<0.1
Acenaphthylene	mg/kg	0.1	----	----	----	----	----	----	<0.1	<0.1	<0.1	<0.1	<0.1	<0.1	<0.1	<0.1	<0.1	<0.1	<0.1
Acenaphthene	mg/kg	0.1	----	----	----	----	----	----	<0.1	<0.1	<0.1	<0.1	<0.1	<0.1	<0.1	<0.1	<0.1	<0.1	<0.1
Fluorene	mg/kg	0.1	----	----	----	----	----	----	<0.1	<0.1	<0.1	<0.1	<0.1	<0.1	<0.1	<0.1	<0.1	<0.1	<0.1
Phenanthrene	mg/kg	0.1	----	----	----	----	----	----	<0.1	<0.1	<0.1	<0.1	<0.1	<0.1	<0.1	**0.3**	<0.1	<0.1	<0.1
Anthracene	mg/kg	0.1	----	----	----	----	----	----	<0.1	<0.1	<0.1	<0.1	<0.1	<0.1	<0.1	<0.1	<0.1	<0.1	<0.1
Fluoranthene	mg/kg	0.1	----	----	----	----	----	----	<0.1	<0.1	<0.1	<0.1	<0.1	<0.1	<0.1	**0.5**	<0.1	<0.1	<0.1
Pyrene	mg/kg	0.1	----	----	----	----	----	----	<0.1	<0.1	<0.1	<0.1	<0.1	<0.1	<0.1	**0.5**	<0.1	<0.1	<0.1
Benz(a)anthracene	mg/kg	0.1	----	----	----	----	----	----	<0.1	<0.1	<0.1	<0.1	<0.1	<0.1	<0.1	**0.2**	<0.1	<0.1	<0.1
Chrysene	mg/kg	0.1	----	----	----	----	----	----	<0.1	<0.1	<0.1	<0.1	<0.1	<0.1	<0.1	**0.2**	<0.1	<0.1	<0.1
Benzo(b+j+k)fluoranthene	mg/kg	0.2	----	----	----	----	----	----	<0.2	<0.2	<0.2	<0.2	<0.2	<0.2	<0.2	**0.3**	<0.2	<0.2	<0.2
Benzo(a)pyrene	mg/kg	0.05	----	----	----	----	1.4	----	<0.05	<0.05	<0.05	<0.05	<0.05	<0.05	<0.05	**0.2**	<0.05	<0.05	<0.05
Indeno(1.2.3.cd)pyrene	mg/kg	0.1	----	----	----	----	----	----	<0.1	<0.1	<0.1	<0.1	<0.1	<0.1	<0.1	**0.1**	<0.1	<0.1	<0.1
Dibenz(a.h)anthracene	mg/kg	0.1	----	----	----	----	----	----	<0.1	<0.1	<0.1	<0.1	<0.1	<0.1	<0.1	<0.1	<0.1	<0.1	<0.1
Benzo(g.h.i)perylene	mg/kg	0.1	----	----	----	----	----	----	<0.1	<0.1	<0.1	<0.1	<0.1	<0.1	<0.1	**0.1**	<0.1	<0.1	<0.1
BaP TEQ	mg/kg	----	40	----	----	----	----	----	<0.5	<0.5	<0.5	<0.5	<0.5	<0.5	<0.5	<0.5	<0.5	<0.5	<0.5
Sum of PAHs	mg/kg	----	4,000	----	----	----	----	----	<LOR	<LOR	<LOR	<LOR	<LOR	<LOR	<LOR	**2.4**	<LOR	<LOR	<LOR
Organochlorine Pesticides																			
HCB	mg/kg	0.1	80	----	----	----	----	----	<0.1	<0.1	<0.1	<0.1	<0.1	<0.1	<0.1	<0.1	<0.1	<0.1	<0.1
alpha-BHC	mg/kg	0.1	----	----	----	----	----	----	<0.1	<0.1	<0.1	<0.1	<0.1	<0.1	<0.1	<0.1	<0.1	<0.1	<0.1
gamma-BHC	mg/kg	0.1	----	----	----	----	----	----	<0.1	<0.1	<0.1	<0.1	<0.1	<0.1	<0.1	<0.1	<0.1	<0.1	<0.1
beta-BHC	mg/kg	0.1	----	----	----	----	----	----	<0.1	<0.1	<0.1	<0.1	<0.1	<0.1	<0.1	<0.1	<0.1	<0.1	<0.1
Heptachlor	mg/kg	0.1	50	----	----	----	----	----	<0.1	<0.1	<0.1	<0.1	<0.1	<0.1	<0.1	<0.1	<0.1	<0.1	<0.1
delta-BHC	mg/kg	0.1	----	----	----	----	----	----	<0.1	<0.1	<0.1	<0.1	<0.1	<0.1	<0.1	<0.1	<0.1	<0.1	<0.1
Aldrin	mg/kg	0.1	----	----	----	----	----	----	<0.1	<0.1	<0.1	<0.1	<0.1	<0.1	<0.1	<0.1	<0.1	<0.1	<0.1
Heptachlor Epoxide	mg/kg	0.1	----	----	----	----	----	----	<0.1	<0.1	<0.1	<0.1	<0.1	<0.1	<0.1	<0.1	<0.1	<0.1	<0.1
gamma-Chlordane	mg/kg	0.1	530	----	----	----	----	----	<0.1	<0.1	<0.1	<0.1	<0.1	<0.1	<0.1	<0.1	<0.1	<0.1	<0.1
alpha-chlordane	mg/kg	0.1		----	----	----	----	----	<0.1	<0.1	<0.1	<0.1	<0.1	<0.1	<0.1	<0.1	<0.1	<0.1	<0.1
pp-DDE	mg/kg	0.1	----	----	----	----	----	----	<0.1	<0.1	<0.1	<0.1	<0.1	<0.1	<0.1	<0.1	<0.1	<0.1	<0.1
Dieldrin	mg/kg	0.1	----	----	----	----	----	----	<0.1	<0.1	<0.1	<0.1	<0.1	<0.1	<0.1	<0.1	<0.1	<0.1	<0.1
Endrin	mg/kg	0.1	100	----	----	----	----	----	<0.1	<0.1	<0.1	<0.1	<0.1	<0.1	<0.1	<0.1	<0.1	<0.1	<0.1
pp-DDD	mg/kg	0.1	----	----	----	----	----	----	<0.1	<0.1	<0.1	<0.1	<0.1	<0.1	<0.1	<0.1	<0.1	<0.1	<0.1
Endosulfan I	mg/kg	0.1	2,000	----	----	----	----	----	<0.1	<0.1	<0.1	<0.1	<0.1	<0.1	<0.1	<0.1	<0.1	<0.1	<0.1
Endosulfan II	mg/kg	0.1		----	----	----	----	----	<0.1	<0.1	<0.1	<0.1	<0.1	<0.1	<0.1	<0.1	<0.1	<0.1	<0.1
Endosulfan Sulphate	mg/kg	0.1		----	----	----	----	----	<0.1	<0.1	<0.1	<0.1	<0.1	<0.1	<0.1	<0.1	<0.1	<0.1	<0.1
pp-DDT	mg/kg	0.1	----	----	----	----	----	----	<0.1	<0.1	<0.1	<0.1	<0.1	<0.1	<0.1	<0.1	<0.1	<0.1	<0.1
Endrin Aldehyde	mg/kg	0.1	----	----	----	----	----	----	<0.1	<0.1	<0.1	<0.1	<0.1	<0.1	<0.1	<0.1	<0.1	<0.1	<0.1
Methoxychlor	mg/kg	0.1	2,500	----	----	----	----	----	<0.1	<0.1	<0.1	<0.1	<0.1	<0.1	<0.1	<0.1	<0.1	<0.1	<0.1
Total +ve Aldrin + Dieldrin	mg/kg	0.1	45	----	----	----	----	----	<LOR	<LOR	<LOR	<LOR	<LOR	<LOR	<LOR	<LOR	<LOR	<LOR	<LOR
Total +ve DDT+DDD+DDE	mg/kg	0.1	3,600	----	----	----	----	----	<LOR	<LOR	<LOR	<LOR	<LOR	<LOR	<LOR	<LOR	<LOR	<LOR	<LOR
Organophosphorous Pesticides																			
Azinphos-methyl (Guthion)	mg/kg	0.1	----	----	----	----	----	----	<0.1	<0.1	<0.1	<0.1	<0.1	<0.1	<0.1	<0.1	<0.1	<0.1	<0.1
Bromophos-ethyl	mg/kg	0.1	----	----	----	----	----	----	<0.1	<0.1	<0.1	<0.1	<0.1	<0.1	<0.1	<0.1	<0.1	<0.1	<0.1
Chlorpyriphos	mg/kg	0.1	2,000	----	----	----	----	----	<0.1	<0.1	<0.1	<0.1	<0.1	<0.1	<0.1	<0.1	<0.1	<0.1	<0.1
Chlorpyriphos-methyl	mg/kg	0.1	----	----	----	----	----	----	<0.1	<0.1	<0.1	<0.1	<0.1	<0.1	<0.1	<0.1	<0.1	<0.1	<0.1
Diazinon	mg/kg	0.1	----	----	----	----	----	----	<0.1	<0.1	<0.1	<0.1	<0.1	<0.1	<0.1	<0.1	<0.1	<0.1	<0.1
Dichlorvos	mg/kg	0.1	----	----	----	----	----	----	<0.1	<0.1	<0.1	<0.1	<0.1	<0.1	<0.1	<0.1	<0.1	<0.1	<0.1
Dimethoate	mg/kg	0.1	----	----	----	----	----	----	<0.1	<0.1	<0.1	<0.1	<0.1	<0.1	<0.1	<0.1	<0.1	<0.1	<0.1
Ethion	mg/kg	0.1	----	----	----	----	----	----	<0.1	<0.1	<0.1	<0.1	<0.1	<0.1	<0.1	<0.1	<0.1	<0.1	<0.1
Fenitrothion	mg/kg	0.1	----	----	----	----	----	----	<0.1	<0.1	<0.1	<0.1	<0.1	<0.1	<0.1	<0.1	<0.1	<0.1	<0.1
Malathion	mg/kg	0.1	----	----	----	----	----	----	<0.1	<0.1	<0.1	<0.1	<0.1	<0.1	<0.1	<0.1	<0.1	<0.1	<0.1
Parathion	mg/kg	0.1	----	----	----	----	----	----	<0.1	<0.1	<0.1	<0.1	<0.1	<0.1	<0.1	<0.1	<0.1	<0.1	<0.1
Ronnel	mg/kg	0.1	----	----	----	----	----	----	<0.1	<0.1	<0.1	<0.1	<0.1	<0.1	<0.1	<0.1	<0.1	<0.1	<0.1
BTEX																			
Benzene	mg/kg	0.2	----	4	6	----	95	----	<0.2	<0.2	<0.2	<0.2	<0.2	<0.2	<0.2	<0.2	<0.2	<0.2	<0.2
Toluene	mg/kg	0.5	----	NL	NL	----	135	----	<0.5	<0.5	<0.5	<0.5	<0.5	<0.5	<0.5	<0.5	<0.5	<0.5	<0.5
Ethylbenzene	mg/kg	1	----	NL	NL	----	185	----	<1	<1	<1	<1	<1	<1	<1	<1	<1	<1	<1
meta- & para-Xylene	mg/kg	2	----	----	----	----	----	----	<2	<2	<2	<2	<2	<2	<2	<2	<2	<2	<2
ortho-Xylene	mg/kg	1	----	----	----	----	----	----	<1	<1	<1	<1	<1	<1	<1	<1	<1	<1	<1
Total Xylenes	mg/kg	----	----	NL	NL	----	95	----	<LOR	<LOR	<LOR	<LOR	<LOR	<LOR	<LOR	<LOR	<LOR	<LOR	<LOR
Total Petroleum Hydrocarbons																			
TRH C6 - C10	mg/kg	25	----	----	----	700	215	----	<25	<25	<25	<25	<25	<25	<25	<25	<25	<25	<25
TPH C6 - C10 less BTEX (F1)	mg/kg	25	----	260	370	----	----	----	<25	<25	<25	<25	<25	<25	<25	<25	<25	<25	<25
TRH > C10-C16	mg/kg	50	----	----	----	1,000	170	----	<50	<50	<50	<50	<50	<50	<50	<50	<50	<50	<50
TRH > C10 - C16 less Naphthalene (F2)	mg/kg	50	----	NL	NL	----	----	----	<50	<50	<50	<50	<50	<50	<50	<50	<50	<50	<50
TRH > C16-C34	mg/kg	100	----	----	----	5,000	2,500	----	<100	<100	<100	<100	<100	<100	<100	<100	<100	<100	<100
TRH > C34-C40	mg/kg	100	----	----	----	10,000	6,600	----	<100	<100	<100	<100	<100	<100	<100	<100	<100	<100	<100

Notes:

LOR	Laboratory limit of reporting
mg/kg	Milligrams per kilogram
HIL	Health Investigation Level for commercial / industrial land use scenario 'D' (ASC NEPM, 2013)
HSL	Health Screening Level for commercial / industrial land use scenario 'D' (ASC NEPM, 2013) (sand matrix)
ESL	Ecological screening level in commercial / industrial land use scenario. Coarse textured soils (ASC NEPM, 2013)
EIL	Ecological investigation level in commercial / industrial land use scenario (ASC NEPM, 2013)
ML	Management limit in commercial / industrial land use scenario (ASC NEPM, 2013)
NL	No risk-based limits derived for this contaminant
**	Criteria for Chomium VI adopted for total chromium
	Shaded results equal exceedance of particular criteria

TABLE B2 - ASBESTOS RESULTS

Environmental Earth Sciences Sample ID:		TP6-1	STP1-1	STP1-2	STP2-2	STP4-1	SBH1	SBH2	SBH3	SBH4	SBH5	SBH6	SBH7
Sample Depth (m):		Stockpile	Stockpile	Stockpile	Stockpile	Stockpile	Borehole	Borehole	Borehole	Borehole	Borehole	Borehole	Borehole
Lab Batch ID:		195714	195714	195714	195714	195714	195714	195714	195714	195714	195714	195714	195714
Sample date:		29-Jun-18	29-Jun-18	29-Jun-18	29-Jun-18	29-Jun-18	02-Jul-18	02-Jul-18	02-Jul-18	02-Jul-18	02-Jul-18	02-Jul-18	02-Jul-18
Analyte grouping/Analyte	**Units**												
Test completes													
Sample mass / dimension tested	mm	35 g	35 g	30 g	40 g	35 g	30 g	30 g	30 g	25 g	25 g	30 g	40 g
Sample Description	g	Brown coarse grained soil & rocks	Brown clayey soil & rocks	Brown clayey soil & rocks	Brown clayey soil & rocks	Brown clayey soil & rocks	Brown clayey soil & rocks	Brown coarse grained soil & rocks	Brown coarse grained soil & rocks	Brown coarse grained soil & rocks	Brown coarse grained soil & rocks	Brown coarse grained soil & rocks	Brown coarse grained soil & rocks
Asbestos trace analysis		No asbestos detected	No asbestos detected	No asbestos detected	No asbestos detected	No asbestos detected	No asbestos detected	No asbestos detected	No asbestos detected	No asbestos detected	No asbestos detected	No asbestos detected	No asbestos detected
Asbestos ID in Soil	----	No asbestos detected at reporting limit of 0.1/kg (organic fibres detected)	No asbestos detected at reporting limit of 0.1/kg (organic fibres detected)	No asbestos detected at reporting limit of 0.1/kg (organic fibres detected)	No asbestos detected at reporting limit of 0.1/kg (organic fibres detected)	No asbestos detected at reporting limit of 0.1/kg (organic fibres detected)	No asbestos detected at reporting limit of 0.1/kg (organic fibres detected)	No asbestos detected at reporting limit of 0.1/kg (organic fibres detected)	No asbestos detected at reporting limit of 0.1/kg (organic fibres detected)	No asbestos detected at reporting limit of 0.1/kg (organic fibres detected)	No asbestos detected at reporting limit of 0.1/kg (organic fibres detected)	No asbestos detected at reporting limit of 0.1/kg (organic fibres detected)	No asbestos detected at reporting limit of 0.1/kg (organic fibres detected)

Notes:

g	Grams
mm	Millimetres

Environmental Earth Sciences Sample ID:		PACM1	PACM2	PACM3
Sample Depth (m):		Stockpile	Stockpile	Stockpile
Lab Batch ID:		195714	195714	195714
Sample date:		29-Jun-18	29-Jun-18	29-Jun-18
Analyte grouping/Analyte	**Units**			
Acid Base Accounting				
Sample mass / dimension tested	mm	55 x 30 x 4 mm	40 x 40 x 4 mm	80 x 45 x 5 mm
Sample Description		Grey fibre cement material	Grey fibre cement material	Beige layered fibre cement material
Asbestos in materials		Chrysotile, amosite & crocidolite asbestos detected	Chrysotile, amosite & crocidolite asbestos detected	No asbestos detected

Notes:

g	Grams
mm	Millimetres

APPENDIX B: HISTORICAL BORE AND MATERIAL LOGS

LOCATION: Eastern Creek, NSW	JOB No. 117102	TRENCH NUMBER: DP1	LOGGED BY: MB
EASTING: -	DRILL TYPE: Excavator		
NORTHING: -	DATE STARTED: 22 / 11 / 2017	CLIENT: Western Sydney Parklands Trust	APPROVED: CN
ELEVATION:	DATE FINISHED: 22 / 11 / 2017		

Sample
Disturbed
Undisturbed
Moisture
M=Moist D=Dry S=Saturated

PAGE #: 1 / 1

Depth (metres).	STRATIGRAPHY	GRAPHIC LOG	SAMPLES Type	Moisture	pH	PID (ppm)	Water Level	COMMENTS
0	CONCRETE LAYER							
	FILL - Coarse sand of ash.			M		3.0		No odour throughout profile
.2	FILL - Firm, brown/red, gravelly clay. Gravel is coarse (1 - 3 cm), subangular.							Ash sand layer noted between 0.1-1.0m
.4								
.6								
.8				M		2.5		
1	NATURAL - Firm, red/grey, CLAY.							
1.2								
1.4								
1.6								
1.8				M		1.6		
2								
2.2								
2.4								
2.6	Colour grading to yellow/grey							
2.8				M		2.9		
3								
3.2								
3.4								
3.6								
3.8				M		2.1		
4	End of hole @ 4.0m depth.							

ENVIRONMENTAL EARTH SCIENCES
THE KNOW AND THE HOW

LOCATION: Eastern Creek, NSW	JOB No. 117102	TRENCH NUMBER: TP1	LOGGED BY: MB
EASTING: -	DRILL TYPE: Excavator		
NORTHING: -	DATE STARTED: 22 / 11 / 2017	CLIENT: Western Sydney Parklands Trust	APPROVED: CN
ELEVATION:	DATE FINISHED: 22 / 11 / 2017		

Sample
Disturbed
Undisturbed
Moisture
M=Moist D=Dry S=Saturated

PAGE #: 1 / 1

Depth (metres).	STRATIGRAPHY	GRAPHIC LOG	SAMPLES Type	Moisture	pH	PID (ppm)	Water Level	COMMENTS
0	FILL - Firm, dark brown, silty sand with rootlets.							
.2				D		0.3		Asbestos fragments noted on surface.
	FILL - Firm, yellow/brown, clay with red and black mottling.							
.4								
.6								Brick and electric cable noted in fill material.
.8								
1				D/M		0.3		
1.2	NATURAL - Firm, red/grey, CLAY.							
1.4								
1.6								
1.8								
2								H2S odour noted.
				D/M		0.7		
2.2								
2.4								
2.6								
2.8								
3								
3.2								
3.4				D/M		0.3		
	End of hole @ 3.5m due to refusal on bedrock							
3.6								

ENVIRONMENTAL EARTH SCIENCES
THE KNOW AND THE HOW

LOCATION: Eastern Creek, NSW	JOB No. 117102	TRENCH NUMBER: TP2	LOGGED BY: MB
EASTING: -	DRILL TYPE: Excavator		
NORTHING: -	DATE STARTED: 22 / 11 / 2017	CLIENT: Western Sydney Parklands Trust	APPROVED: CN
ELEVATION:	DATE FINISHED: 22 / 11 / 2017		

Sample
Disturbed
Undisturbed
Moisture
M=Moist D=Dry S=Saturated

PAGE #: 1 / 1

Depth (metres).	STRATIGRAPHY	GRAPHIC LOG	SAMPLES Type	Moisture	pH	PID (ppm)	Water Level	COMMENTS
0	FILL - Firm, dark brown, gravelly, clayey silt. Cobbles notes. Gravel and cobbles are predominsntly building rubble (concrete, bitumen)..			D/M		0.0		No odour throughout profile Bitumen pieces noted (2 x 5cm)
.2	NATURAL - Firm, yellow, clayey SILT.							
.4								
.6								
.8				M		0.4		
1								
1.2								
1.4								
1.6	NATURAL - Firm, red/grey, CLAY.							
1.8								
2				M		0.0		
2.2								
2.4								
2.6								
2.8								
3				M		0.1		
3.2								
3.4								
3.6								
3.8								
4				M		0.0		
4.2	End of hole @ 4.2m							

ENVIRONMENTAL EARTH SCIENCES
THE KNOW AND THE HOW

LOCATION: Eastern Creek, NSW	JOB No. 117102	TRENCH NUMBER: TP3	LOGGED BY: MB
EASTING: -	DRILL TYPE: Excavator		
NORTHING: -	DATE STARTED: 22 / 11 / 2017	CLIENT: Western Sydney Parklands Trust	APPROVED: CN
ELEVATION:	DATE FINISHED: 22 / 11 / 2017		

Sample: Disturbed; Undisturbed
Moisture: M=Moist D=Dry S=Saturated
Groundwater: Water Strike; Standing Water Level

PAGE #: 1 / 1

Depth (metres)	STRATIGRAPHY	GRAPHIC LOG	SAMPLES Type	Moisture	pH	PID (ppm)	Water Level	COMMENTS
0	FILL - Loose, yellow/white sand.							TP3 advanced within the UST tank piit excavation. Excavation comprised sandy bedding material.
.2				M		99.7		Petroleum hydrocarbon impact noted (including visible product) in most of the profile within sandy bedding material.
.4								
.6				M		402		
.8	FILL - Loose, black sand.							
1								
1.2	FILL - Loose, white sand.			M		414		
1.4								
1.6								
1.8				M		253.5		
2								Water strike @ 2.0m.
2.2								
2.4				S		83.2		
	End of hole @ 2.5m to avoid creating preferential pathway for hydrocarbon.							

ENVIRONMENTAL EARTH SCIENCES
THE KNOW AND THE HOW

LOCATION: Eastern Creek, NSW	JOB No. 117102	TRENCH NUMBER: TP3	LOGGED BY: MB
EASTING: -	DRILL TYPE: Excavator		
NORTHING: -	DATE STARTED: 22 / 11 / 2017	CLIENT: Western Sydney Parklands Trust	APPROVED: CN
ELEVATION:	DATE FINISHED: 22 / 11 / 2017		

Sample: Disturbed; Undisturbed
Moisture: M=Moist D=Dry S=Saturated
Groundwater: Water Strike; Standing Water Level

PAGE #: 1 / 1

Depth (metres)	STRATIGRAPHY	GRAPHIC LOG	SAMPLES Type	Moisture	pH	PID (ppm)	Water Level	COMMENTS
0	FILL - Loose, yellow/white sand.							TP3 advanced within the UST tank piit excavation. Excavation comprised sandy bedding material.
.2				M		99.7		Petroleum hydrocarbon impact noted (including visible product) in most of the profile within sandy bedding material.
.4								
.6				M		402		
.8	FILL - Loose, black sand.							
1								
1.2	FILL - Loose, white sand.			M		414		
1.4								
1.6								
1.8				M		253.5		
2								Water strike @ 2.0m.
2.2								
2.4				S		83.2		
	End of hole @ 2.5m to avoid creating preferential pathway for hydrocarbon.							

ENVIRONMENTAL EARTH SCIENCES
THE KNOW AND THE HOW

LOCATION: Eastern Creek, NSW	JOB No. 117102	TRENCH NUMBER: TP4	LOGGED BY: MB
EASTING: -	DRILL TYPE: Excavator		
NORTHING: -	DATE STARTED: 22 / 11 / 2017	CLIENT: Western Sydney Parklands Trust	APPROVED: CN
ELEVATION:	DATE FINISHED: 22 / 11 / 2017		

Sample: Disturbed; Undisturbed
Moisture: M=Moist D=Dry S=Saturated
Groundwater: Water Strike; Standing Water Level

PAGE #: 1 / 1

Depth (metres)	STRATIGRAPHY	GRAPHIC LOG	SAMPLES Type	Moisture	pH	PID (ppm)	Water Level	COMMENTS
0	FILL - Loose, dark brown/grey, gravelly sand. Gravel is medium, subangular. Minor ash component noted.			M		0.3		No odour throughout profile Minor ash noted within fill material.
.2	NATURAL - Soft, dark grey CLAY.							
.4								
.6								
.8								
1				M		2.6		
1.2	NATURAL - Firm, light brown CLAY.							
1.4				M		1.3		
1.6	End of hole @ 1.5m in natural material.							

ENVIRONMENTAL EARTH SCIENCES
THE KNOW AND THE HOW

LOCATION: Eastern Creek, NSW	JOB No. 117102	TRENCH NUMBER: TP5	LOGGED BY: MB
EASTING: -	DRILL TYPE: Excavator		
NORTHING: -	DATE STARTED: 22 / 11 / 2017	CLIENT: Western Sydney Parklands Trust	APPROVED: CN
ELEVATION:	DATE FINISHED: 22 / 11 / 2017		

Sample: Disturbed; Undisturbed
Moisture: M=Moist D=Dry S=Saturated
Groundwater: Water Strike; Standing Water Level

PAGE #: 1 / 1

Depth (metres)	STRATIGRAPHY	GRAPHIC LOG	SAMPLES Type	Moisture	pH	PID (ppm)	Water Level	COMMENTS
0	FILL - Firm, brown, clayey silt with rootlets.							No visual or olfactory evidence of contamination
.2	NATURAL - Red, firm CLAY.			D/M		0.0		
.4								
.6								
.8								
1								
1.2								
1.4								
1.6	NATURAL - Firm, yellow/grey CLAY.			M		0.3		
1.8	End of hole @ 1.8m in natural.							

ENVIRONMENTAL EARTH SCIENCES
THE KNOW AND THE HOW

LOCATION: Eastern Creek, NSW	JOB No. 117102	TRENCH NUMBER: TP6	LOGGED BY: MB
EASTING: -	DRILL TYPE: Excavator		
NORTHING: -	DATE STARTED: 22 / 11 / 2017	CLIENT: Western Sydney Parklands Trust	APPROVED: CN
ELEVATION:	DATE FINISHED: 22 / 11 / 2017		

Sample: Disturbed; Undisturbed
Moisture: M=Moist D=Dry S=Saturated
Groundwater: Water Strike; Standing Water Level

PAGE #: 1 / 1

Depth (metres).	STRATIGRAPHY	GRAPHIC LOG	SAMPLES Type	Moisture	pH	PID (ppm)	Water Level	COMMENTS
0	FILL - Firm, brown, gravelly, silty clay. Gravel is coarse of building rubble. Cobbles of building rubble noted.			D/M		1.0		No odour throughout profile
.2								
.4	NATURAL - Red, firm CLAY.			M		0.0		
.6	End of hole @ 0.6m in natural.							

ENVIRONMENTAL EARTH SCIENCES
THE KNOW AND THE HOW

LOCATION: Eastern Creek, NSW	JOB No. 117102	TRENCH NUMBER: TP7	LOGGED BY: MB
EASTING: -	DRILL TYPE: Excavator		
NORTHING: -	DATE STARTED: 22 / 11 / 2017	CLIENT: Western Sydney Parklands Trust	APPROVED: CN
ELEVATION:	DATE FINISHED: 22 / 11 / 2017		

Sample: Disturbed; Undisturbed

Moisture: M=Moist D=Dry S=Saturated

Groundwater: Water Strike; Standing Water Level

PAGE #: 1 / 1

Depth (metres).	STRATIGRAPHY	GRAPHIC LOG	SAMPLES Type	Moisture	pH	PID (ppm)	Water Level	COMMENTS
0	FILL - Loose, grey, gravelly, sand. Gravel is fine to coarse (0.5 - 1cm), angular.		Disturbed	D/M		0.1		No visual or olfactory evidence of contamination throughout profile
.2								
.4	NATURAL - Stiff, red CLAY.							
.6								
.8								
1			Disturbed	M		0.5		
1.2								
1.4								
1.6	NATURAL - Stiff, red / brown CLAY.							
1.8								
2								
2.2								
2.4			Disturbed	M		0.4		
	End of hole @ 2.5m in natural.							

ENVIRONMENTAL EARTH SCIENCES
THE KNOW AND THE HOW

LOCATION: Eastern Creek, NSW	JOB No. 117102	TRENCH NUMBER: TP8	LOGGED BY: MB
EASTING: -	DRILL TYPE: Excavator		
NORTHING: -	DATE STARTED: 22 / 11 / 2017	CLIENT: Western Sydney Parklands Trust	APPROVED: CN
ELEVATION:	DATE FINISHED: 22 / 11 / 2017		

Sample: Disturbed; Undisturbed

Moisture: M=Moist D=Dry S=Saturated

Groundwater: Water Strike; Standing Water Level

PAGE #: 1 / 1

Depth (metres)	STRATIGRAPHY	GRAPHIC LOG	SAMPLES Type	Moisture	pH	PID (ppm)	Water Level	COMMENTS
0	FILL - Firm, brown, sandt, gravelly clay. Gravel is fine to coarse, subangular. Minor ash component in sand. Rare cobbles noted.			D/M		0.0		No odour throughout profile Ash particles (1%) noted between 0 - 1m depth
1	NATURAL - Firm, red / brown CLAY.			M		0.8		
2	End of hole @ 2.0m in natural.			M		0.6		

ENVIRONMENTAL EARTH SCIENCES
THE KNOW AND THE HOW

LOCATION: Eastern Creek, NSW	JOB No. 117102	TRENCH NUMBER: TP9	LOGGED BY: MB
EASTING: -	DRILL TYPE: Excavator		
NORTHING: -	DATE STARTED: 22 / 11 / 2017	CLIENT: Western Sydney Parklands Trust	APPROVED: CN
ELEVATION:	DATE FINISHED: 22 / 11 / 2017		

Sample: Disturbed; Undisturbed

Moisture: M=Moist D=Dry S=Saturated

Groundwater: Water Strike; Standing Water Level

PAGE #: 1 / 1

STRATIGRAPHY

Depth (metres)	STRATIGRAPHY	GRAPHIC LOG	SAMPLES Type	Moisture	pH	PID (ppm)	Water Level	COMMENTS
0	FILL - Firm, brown, gravelly, clay. Gravel is fine to coarse of blue metal (5%) and road base (20%). Rare cobbles noted.							Slight petroleum hydrocarbon odour noted amongst road base
.2				D/M		0.3		
.4								
.6								
.8								
1	NATURAL - Firm, orange CLAY.							
1.2								
1.4				D/M		0.3		
	End of hole @ 1.5m in natural.							

ENVIRONMENTAL EARTH SCIENCES
THE KNOW AND THE HOW

LOCATION: Eastern Creek, NSW	JOB No. 117102	TRENCH NUMBER: TP10	LOGGED BY:
EASTING: -	DRILL TYPE: Excavator		MB
NORTHING: -	DATE STARTED: 22 / 11 / 2017	CLIENT: Western Sydney Parklands Trust	APPROVED:
ELEVATION:	DATE FINISHED: 22 / 11 / 2017		CN

Sample
Disturbed
Undisturbed
Moisture
M=Moist D=Dry S=Saturated

Groundwater
Water Strike
Standing Water Level

PAGE #: 1 / 1

Depth (metres).	STRATIGRAPHY	GRAPHIC LOG	SAMPLES Type	Moisture	pH	PID (ppm)	Water Level	COMMENTS
0	FILL - Firm, brown/red clay.			D/M		0.0		No visual or olfactory evidence of contamination throughout profile
.2								
.4								
.6								
.8								
1	NATURAL - Firm, yellow/grey CLAY.			D/M		0.0		
1.2	End of hole @ 1.2m in natural.							

ENVIRONMENTAL EARTH SCIENCES
THE KNOW AND THE HOW

LOCATION: Eastern Creek, NSW	JOB No. 117102	TRENCH NUMBER: TP11	LOGGED BY:
EASTING: -	DRILL TYPE: Excavator		MB
NORTHING: -	DATE STARTED: 22 / 11 / 2017	CLIENT: Western Sydney Parklands Trust	APPROVED:
ELEVATION:	DATE FINISHED: 22 / 11 / 2017		CN

Sample: Disturbed; Undisturbed
Moisture: M=Moist D=Dry S=Saturated
Groundwater: Water Strike; Standing Water Level

PAGE #: 1 / 1

Depth (metres)	STRATIGRAPHY	GRAPHIC LOG	SAMPLES Type	Moisture	pH	PID (ppm)	Water Level	COMMENTS
0	FILL - Firm, brown, gravelly clay. Gravel is fine to coarse, subangular. Fibro-cement fragments noted on surface.			D/M		0.4		3 x PACM fragments (10 x 3cm) taken
.4	FILL - Firm, brown, gravelly clay. Bitumen fragments present.			D/M		0.1		Slight hydrocarbon odour noted on bitumen
.6	NATURAL - Firm, yellow/brown CLAY.							
.8								
1								
1.2								
1.4								
1.6								
1.8								
2	End of hole @ 2.0m in natural.							

ENVIRONMENTAL EARTH SCIENCES
THE KNOW AND THE HOW

LOCATION: Eastern Creek, NSW	JOB No. 117102	TRENCH NUMBER: TP12	LOGGED BY: MB
EASTING: -	DRILL TYPE: Excavator		
NORTHING: -	DATE STARTED: 22 / 11 / 2017	CLIENT: Western Sydney Parklands Trust	APPROVED: CN
ELEVATION:	DATE FINISHED: 22 / 11 / 2017		

Sample
Disturbed
Undisturbed
Moisture
M=Moist D=Dry S=Saturated

Groundwater
Water Strike
Standing Water Level

PAGE #: 1 / 1

Depth (metres).	STRATIGRAPHY	GRAPHIC LOG	SAMPLES Type	Moisture	pH	PID (ppm)	Water Level	COMMENTS
0	NATURAL - Firm, brown/red clay.							No visual or olfactory evidence of contamination throughout profile
.1				M		0.2		
.2	NATURAL - Firm, yellow/grey CLAY.							
.3								
.4				M		0.0		
.5	End of hole @ 0.5m in natural.							

ENVIRONMENTAL EARTH SCIENCES
THE KNOW AND THE HOW

LOCATION: Eastern Creek, NSW	JOB No. 117102	TRENCH NUMBER: TP13	LOGGED BY:
EASTING: -	DRILL TYPE: Excavator		MB
NORTHING: -	DATE STARTED: 22 / 11 / 2017	CLIENT: Western Sydney Parklands Trust	APPROVED:
ELEVATION:	DATE FINISHED: 22 / 11 / 2017		CN

Sample: Disturbed; Undisturbed

Moisture: M=Moist D=Dry S=Saturated

Groundwater: Water Strike; Standing Water Level

PAGE #: 1 / 1

Depth (metres).	STRATIGRAPHY	GRAPHIC LOG	SAMPLES Type	Moisture	pH	PID (ppm)	Water Level	COMMENTS
0	FILL - Firm, brown/red clay. Minor ash noted on surface.							Ash noted on surface. No odour throughout profile
.1				M		0.4		
.2	NATURAL - Firm, yellow/grey CLAY.							
.3								
.4				M		0.7		
.5	End of hole @ 0.5m in natural.							

ENVIRONMENTAL EARTH SCIENCES
THE KNOW AND THE HOW

LOCATION: Eastern Creek, NSW	JOB No. 117102	TRENCH NUMBER: TP14	LOGGED BY: MB
EASTING: -	DRILL TYPE: Excavator		
NORTHING: -	DATE STARTED: 23 / 11 / 2017	CLIENT: Western Sydney Parklands Trust	APPROVED: CN
ELEVATION:	DATE FINISHED: 23 / 11 / 2017		

Sample: Disturbed; Undisturbed
Moisture: M=Moist D=Dry S=Saturated
Groundwater: Water Strike; Standing Water Level

PAGE #: 1 / 1

Depth (metres).	STRATIGRAPHY	GRAPHIC LOG	SAMPLES Type	Moisture	pH	PID (ppm)	Water Level	COMMENTS
0	NATURAL - Soft, dark grey SILT with rootlets.							No visual or olfactory evidence of contamination throughout profile
.1				M		1.3		
.2	NATURAL - Firm, grey CLAY.							
.3								
.4				M		2.4		
.5	End of hole @ 0.5m in natural.							

ENVIRONMENTAL EARTH SCIENCES
THE KNOW AND THE HOW

LOCATION: Eastern Creek, NSW	JOB No. 117102	TRENCH NUMBER: TP15	LOGGED BY: MB
EASTING: -	DRILL TYPE: Excavator		
NORTHING: -	DATE STARTED: 23 / 11 / 2017	CLIENT: Western Sydney Parklands Trust	APPROVED: CN
ELEVATION:	DATE FINISHED: 23 / 11 / 2017		

Sample: Disturbed; Undisturbed
Moisture: M=Moist D=Dry S=Saturated
Groundwater: Water Strike; Standing Water Level

PAGE #: 1 / 1

Depth (metres)	STRATIGRAPHY	GRAPHIC LOG	SAMPLES Type	Moisture	pH	PID (ppm)	Water Level	COMMENTS
0	FILL - Firm, yellow/grey, gravelly, silty clay.							No visual or olfactory evidence of contamination throughout profile
.1				D/M		1.1		
.2								
.3	NATURAL - Firm, dark brown, silty CLAY.							
.4				M		0.0		
.5								
.6	End of hole @ 0.6m in natural.							

ENVIRONMENTAL EARTH SCIENCES
THE KNOW AND THE HOW

LOCATION: Eastern Creek, NSW	JOB No. 117102	TRENCH NUMBER: TP16	LOGGED BY:
EASTING: -	DRILL TYPE: Excavator		MB
NORTHING: -	DATE STARTED: 23 / 11 / 2017	CLIENT: Western Sydney Parklands Trust	APPROVED:
ELEVATION:	DATE FINISHED: 23 / 11 / 2017		CN

Sample: Disturbed; Undisturbed
Moisture: M=Moist D=Dry S=Saturated
Groundwater: Water Strike; Standing Water Level

PAGE #: 1 / 1

Depth (metres).	STRATIGRAPHY	GRAPHIC LOG	SAMPLES Type	Moisture	pH	PID (ppm)	Water Level	COMMENTS
0	FILL - Loose, light brown, coarse grained, gravelly sand. Gravel is fine, subangular.			D/M		1.4		No visual or olfactory evidence of contamination throughout the profile
.2								
.4								
.6								
.8	NATURAL - Firm, brown, silty CLAY.			M		2.7		
1								
1.2								
1.4	End of hole @ 1.5m in natural.							
1.6								

ENVIRONMENTAL EARTH SCIENCES
THE KNOW AND THE HOW

LOCATION: Eastern Creek, NSW	JOB No. 117102	TRENCH NUMBER: TP17	LOGGED BY:
EASTING: -	DRILL TYPE: Excavator		MB
NORTHING: -	DATE STARTED: 23 / 11 / 2017	CLIENT: Western Sydney Parklands Trust	APPROVED:
ELEVATION:	DATE FINISHED: 23 / 11 / 2017		CN

Sample: Disturbed; Undisturbed
Moisture: M=Moist D=Dry S=Saturated
Groundwater: Water Strike; Standing Water Level

PAGE #: 1 / 1

Depth (metres).	STRATIGRAPHY	GRAPHIC LOG	SAMPLES Type	Moisture	pH	PID (ppm)	Water Level	COMMENTS
0	FILL - Loose, brown, silty sand with rootlets.			D/M		0.5		No visual or olfactory evidence of contamination throughout profile
.1	NATURAL - Firm, red/brown CLAY.							
.2								
.3								
.4								
.5				D/M		0.8		
.6	End of hole @ 0.6m in natural.							

ENVIRONMENTAL EARTH SCIENCES
THE KNOW AND THE HOW

LOCATION: Eastern Creek, NSW	JOB No. 117102	TRENCH NUMBER: TP18	LOGGED BY:
EASTING: -	DRILL TYPE: Excavator		MB
NORTHING: -	DATE STARTED: 23 / 11 / 2017	CLIENT: Western Sydney Parklands Trust	APPROVED:
ELEVATION:	DATE FINISHED: 23 / 11 / 2017		CN

Sample: Disturbed; Undisturbed
Moisture: M=Moist D=Dry S=Saturated
Groundwater: Water Strike; Standing Water Level

PAGE #: 1 / 1

Depth (metres).	STRATIGRAPHY	GRAPHIC LOG	SAMPLES Type	Moisture	pH	PID (ppm)	Water Level	COMMENTS
0	FILL - Loose, brown, silty sand with rootlets.			D/M		0.1		No odour thorughout profile Building rubble noted on surface.
.2	NATURAL - Firm, brown/red CLAY.							
.4								
.6	NATURAL - Hard, yellow/light grey, SHALE.							
.8				M		0.5		
1	End of hole @ 1.0m in natural.							

ENVIRONMENTAL EARTH SCIENCES
THE KNOW AND THE HOW

LOCATION: Eastern Creek, NSW	JOB No. 117102	TRENCH NUMBER: TP19	LOGGED BY:
EASTING: -	DRILL TYPE: Excavator		MB
NORTHING: -	DATE STARTED: 23 / 11 / 2017	CLIENT: Western Sydney Parklands Trust	APPROVED:
ELEVATION:	DATE FINISHED: 23 / 11 / 2017		CN

Sample: Disturbed; Undisturbed
Moisture: M=Moist D=Dry S=Saturated
Groundwater: Water Strike; Standing Water Level

PAGE #: 1 / 1

Depth (metres).	STRATIGRAPHY	GRAPHIC LOG	SAMPLES Type	Moisture	pH	PID (ppm)	Water Level	COMMENTS
0	FILL - Firm, gravelly, silty sand. Building rubble noted on surface.							No odour thorughout profile
.2				D/M		0.9		
.4	NATURAL - Firm, yellow/grey CLAY.							
.6								
.8				M		0.6		
1	End of hole @ 1.0m in natural .							

ENVIRONMENTAL EARTH SCIENCES
THE KNOW AND THE HOW

LOCATION: Eastern Creek, NSW	JOB No. 117102	TRENCH NUMBER: TP20	LOGGED BY:
EASTING: -	DRILL TYPE: Excavator		MB
NORTHING: -	DATE STARTED: 23 / 11 / 2017	CLIENT: Western Sydney Parklands Trust	APPROVED:
ELEVATION:	DATE FINISHED: 23 / 11 / 2017		CN

Sample: Disturbed; Undisturbed
Moisture: M=Moist D=Dry S=Saturated
Groundwater: Water Strike; Standing Water Level

PAGE #: 1 / 1

Depth (metres).	STRATIGRAPHY	GRAPHIC LOG	SAMPLES Type	Moisture	pH	PID (ppm)	Water Level	COMMENTS
0	FILL - Firm, gravelly, silty sand. Building rubble noted on surface.							No odour thorughout profile
.2				M		2.1		
.4								
	NATURAL - Firm, red/brown CLAY.							
.6								
.8								
1				M		0.7		
1.2	End of hole @ 1.2m in natural.							

ENVIRONMENTAL EARTH SCIENCES
THE KNOW AND THE HOW

LOCATION: Eastern Creek, NSW	JOB No. 117102	TRENCH NUMBER: TP21	LOGGED BY: MB
EASTING: -	DRILL TYPE: Excavator		
NORTHING: -	DATE STARTED: 23 / 11 / 2017	CLIENT: Western Sydney Parklands Trust	APPROVED: CN
ELEVATION:	DATE FINISHED: 23 / 11 / 2017		

Sample: Disturbed; Undisturbed
Moisture: M=Moist D=Dry S=Saturated
Groundwater: Water Strike; Standing Water Level

PAGE #: 1 / 1

Depth (metres).	STRATIGRAPHY	GRAPHIC LOG	SAMPLES Type	Moisture	pH	PID (ppm)	Water Level	COMMENTS
0	FILL - Loose, brown, gravelly, silty sand. Building rubble noted on surface including firbo-cement fragments (2%) and broken glass (8%).							
.2				D		0.3		
.4								PACM 4 taken
.6								
.8				D		0.4		
1	NATURAL - Firm, red/brown CLAY.							
1.2								
1.4				D/M		0.3		
1.6	End of hole @ 1.5m in natural.							

ENVIRONMENTAL EARTH SCIENCES
THE KNOW AND THE HOW

LOCATION: Eastern Creek, NSW	JOB No. 117102	TRENCH NUMBER: TP22	LOGGED BY: MB
EASTING: -	DRILL TYPE: Excavator		
NORTHING: -	DATE STARTED: 23 / 11 / 2017	CLIENT: Western Sydney Parklands Trust	APPROVED: CN
ELEVATION:	DATE FINISHED: 23 / 11 / 2017		

Sample: Disturbed; Undisturbed
Moisture: M=Moist D=Dry S=Saturated
Groundwater: Water Strike; Standing Water Level

PAGE #: 1 / 1

Depth (metres)	STRATIGRAPHY	GRAPHIC LOG	SAMPLES Type	Moisture	pH	PID (ppm)	Water Level	COMMENTS
0	FILL - Loose, grey, gravelly, silty sand. Building rubble noted on surface including broken glass and fibro-cement fragments.							Fibro-cement sampled for asbestos.
.2				D/M		0.7		
.4								
.6	NATURAL - Firm, brown/red CLAY.							
.8				D/M		0.2		
1	End of hole @ 1.0m in natural.							

ENVIRONMENTAL EARTH SCIENCES
THE KNOW AND THE HOW

LOCATION: Eastern Creek, NSW	JOB No. 117102	TRENCH NUMBER: TP23	LOGGED BY: MB
EASTING: -	DRILL TYPE: Excavator		
NORTHING: -	DATE STARTED: 23 / 11 / 2017	CLIENT: Western Sydney Parklands Trust	APPROVED: CN
ELEVATION:	DATE FINISHED: 23 / 11 / 2017		

Sample: Disturbed; Undisturbed
Moisture: M=Moist D=Dry S=Saturated
Groundwater: Water Strike; Standing Water Level

PAGE #: 1 / 1

Depth (metres)	STRATIGRAPHY	GRAPHIC LOG	SAMPLES Type	Moisture	pH	PID (ppm)	Water Level	COMMENTS
0	FILL - Loose, brown, gravelly sand. Gravel if medium to coarse of blue metal and crushed bitumen.							Bitumen / roadbase gravels noted throughout fill material layer. Hydrocarbon odour noted on bitumen asphalt pieces.
.2				D/M		0.5		
.4								
.6								
.8								
1				D/M		0.3		
1.2	NATURAL - Firm, brown CLAY.							
1.4								
1.6				M		0.3		
1.8	End of hole @ 1.7m in natural.							

ENVIRONMENTAL EARTH SCIENCES
THE KNOW AND THE HOW

LOCATION: Eastern Creek, NSW	JOB No. 117102	TRENCH NUMBER: TP24	LOGGED BY: MB
EASTING: -	DRILL TYPE: Excavator		
NORTHING: -	DATE STARTED: 23 / 11 / 2017	CLIENT: Western Sydney Parklands Trust	APPROVED: CN
ELEVATION:	DATE FINISHED: 23 / 11 / 2017		

Sample: Disturbed; Undisturbed
Moisture: M=Moist D=Dry S=Saturated
Groundwater: Water Strike; Standing Water Level

PAGE #: 1 / 1

Depth (metres)	STRATIGRAPHY	GRAPHIC LOG	SAMPLES Type	Moisture	pH	PID (ppm)	Water Level	COMMENTS
0	FILL - Firm, brown, silty clay.							No visual or olfactory evidence of contamination throughout profile
.2								
.4				D/M		0.6		
.6	NATURAL - Firm, dark grey, clayey SILT.							
.8								
1								
				D/M		0.3		
1.2	End of hole @ 1.2m in natural.							

ENVIRONMENTAL EARTH SCIENCES
THE KNOW AND THE HOW

LOCATION: Eastern Creek, NSW	JOB No. 117102	TRENCH NUMBER: TP25	LOGGED BY:
EASTING: -	DRILL TYPE: Excavator		MB
NORTHING: -	DATE STARTED: 23 / 11 / 2017	CLIENT: Western Sydney Parklands Trust	APPROVED:
ELEVATION:	DATE FINISHED: 23 / 11 / 2017		CN

Sample: Disturbed; Undisturbed

Moisture: M=Moist D=Dry S=Saturated

Groundwater: Water Strike; Standing Water Level

PAGE #: 1 / 1

Depth (metres).	STRATIGRAPHY	GRAPHIC LOG	SAMPLES Type	Moisture	pH	PID (ppm)	Water Level	COMMENTS
0	FILL - Firm, brown, silty clay.							No visual or olfactory evidence of contamination throughout profile
.2				D/M		0.5		
.4								
.6	NATURAL - Dark grey, clayey SILT.							
.8								
1				M		0.3		
1.2	End of hole @ 1.2m in natural.							

ENVIRONMENTAL EARTH SCIENCES
THE KNOW AND THE HOW

Geological Borelog

ENVIRONMENTAL EARTH SCIENCES
CONTAMINATION RESOLVED

LOCATION: Eastern Creek - Farm dam 2		Borehole Log: DTP1	Logged by: LD
SURFACE ELEVATION:	JOB NUMBER: 118069		
GROUNDWATER: -	DATUM:	PROJECT: Light Horse Junction	Proj. Manager: CN
DRILL METHOD: Excavator	DATE DRILLED: 29/6/18		

STRATIGRAPHY	GRAPHIC LOG	Depth metres	Sample Depth	Moisture Content	PID/FID Background	PID/FID Reading	pH - soil	pH - water	Comments
FILL Firm, light yellow / brown, silty clay with rootlets.		0.2 0.4 0.6 0.8 1.0 1.2 1.4	—	DTP1-1					No visual or olfactory indications of contamination throught profile.
NATURAL Loose, light brown / grey, SILTY CLAY with rootlets.		1.6	—	DTP1-2					Test pit advanced into side of farm dam levee wall.
End of hole @1.7m (Natural layer encountered).		1.8 2.0 2.2 2.4 2.6 2.8 3.0							

NOTE: This bore log is for environmental purposes only and is not intended to provide geotechnical information.

Geological Borelog

ENVIRONMENTAL EARTH SCIENCES
CONTAMINATION RESOLVED

LOCATION: Eastern Creek - Farm dam 2		Borehole Log: DTP2	Logged by: LD
SURFACE ELEVATION:	JOB NUMBER: 118069		
GROUNDWATER: -	DATUM:	PROJECT: Light Horse Junction	Proj. Manager: CN
DRILL METHOD: Excavator	DATE DRILLED: 29/6/18		

STRATIGRAPHY	GRAPHIC LOG	Depth metres	Sample Depth	Moisture Content	PID/FID Background	PID/FID Reading	pH - soil	pH - water	Comments
FILL Firm, light yellow / brown, silty clay with rootlets.		0.2 0.4 0.6 0.8 1.0 1.2 1.4 1.6	—	DTP2-1					No visual or olfactory indications of contamination throughout profile.
NATURAL Loose, light brown/grey, SILTY CLAY with rootlets.		1.8							Test pit advanced into side of farm dam levee wall.
End of hole @2m (Natural layer encountered).		2.0 2.2 2.4 2.6 2.8 3.0							

NOTE: This bore log is for environmental purposes only and is not intended to provide geotechnical information.

Geological Borelog

ENVIRONMENTAL EARTH SCIENCES
CONTAMINATION RESOLVED

LOCATION: Eastern Creek - Farm dam 1		Borehole Log: DTP3	Logged by: LD
SURFACE ELEVATION:	JOB NUMBER: 118069		
GROUNDWATER:	DATUM:	PROJECT: Light Horse Junction	Proj. Manager: CN
DRILL METHOD: Excavator	DATE DRILLED: 29/6/18		

STRATIGRAPHY	GRAPHIC LOG	Depth metres	Sample Depth	Moisture Content	PID/FID Background	PID/FID Reading	pH - soil	pH - water	Comments
FILL Stiff, light brown / yellow, silty clay, with rootlets.		0.2 0.4 0.6 0.8 1.0 1.2 1.4 1.6	—	DTP3-1					No visual or olfactory indications of contamination throughout profile. Large clods of denser clay material. Small sections of reworked natural.
NATURAL Loose, light brown / grey, SILTY CLAY with rootlets.		1.8							
End of hole @ 1.9 m (Natural layer encountered).		2.0 2.2 2.4 2.6 2.8 3.0							Test pit advanced into side of farm dam levee wall.

NOTE: This bore log is for environmental purposes only and is not intended to provide geotechnical information.

Geological Borelog

ENVIRONMENTAL EARTH SCIENCES
CONTAMINATION RESOLVED

LOCATION: Eastern Creek - Farm dam 1		Borehole Log: DTP4	Logged by: LD
SURFACE ELEVATION:	JOB NUMBER: 118069		
GROUNDWATER: -	DATUM:	PROJECT: Light Horse Junction	Proj. Manager: CN
DRILL METHOD: Excavator	DATE DRILLED: 29/6/18		

STRATIGRAPHY	GRAPHIC LOG	Depth metres	Sample Depth	Moisture Content	PID/FID Background	PID/FID Reading	pH - soil	pH - water	Comments
FILL Very stiff, yellow / brown, silty clay, with roolets.		0.2 0.4 0.6 0.8 1.0 1.2 1.4 1.6 1.8 2.0	—	DTP4-1					No visual or olfactory indications of contamination throughout profile. Large clods of more dense clay material present. Small sections of reworked natural present.
NATURAL Firm, light brown / grey, SILTY CLAY, with red mottles (20 %).		2.2 2.4							Test pit advanced into side of farm dam levee wall.
End of hole @ 2.4 m (Natural layer encountered).		2.6 2.8 3.0							

NOTE: This bore log is for environmental purposes only and is not intended to provide geotechnical information.

Geological Borelog

ENVIRONMENTAL EARTH SCIENCES
CONTAMINATION RESOLVED

LOCATION: Eastern Creek - Stockpile 1		Borehole Log: STP1	Logged by: LD
SURFACE ELEVATION:	JOB NUMBER: 118069		
GROUNDWATER: -	DATUM:	PROJECT: Light Horse Junction	Proj. Manager: CN
DRILL METHOD: Excavator	DATE DRILLED: 29/6/18		

STRATIGRAPHY	GRAPHIC LOG	Depth metres	Sample Depth	Moisture Content	PID/FID Background	PID/FID Reading	pH - soil	pH - water	Comments
FILL Stiff, brown, gravelly clay. Gravel is rounded of predominantly river pebbles (reworked natural).		0.2 0.4 0.6 0.8		STP1-1					No visual or olfactory indications of contamination throughout profile.
Colour grading to light brown.		1.0 1.2 1.4 1.6 1.8							
NATURAL Very stiff, orange / red CLAY.		2.0 2.2		STP1-2					Natural layer consistent with base of stockpile.
End of hole @ 2.4m (Natural layer encountered).		2.4 2.6 2.8 3.0							

NOTE: This bore log is for environmental purposes only and is not intended to provide geotechnical information.

Geological Borelog

ENVIRONMENTAL EARTH SCIENCES
CONTAMINATION RESOLVED

LOCATION: Eastern Creek		Borehole Log: STP2 - Stockpile 1	Logged by: LD
SURFACE ELEVATION:	JOB NUMBER: 118069		
GROUNDWATER: -	DATUM:	PROJECT: Light Horse Junction	Proj. Manager: CN
DRILL METHOD: Excavator	DATE DRILLED: 29/6/18		

STRATIGRAPHY	GRAPHIC LOG	Depth metres	Sample Depth	Moisture Content	PID/FID Background	PID/FID Reading	pH - soil	pH - water	Comments
FILL Stiff, brown, gravelly clay. Gravel of subangular, fine - coarse building rubble (blue metal, asphalt, brick, sandstone). Cobbles of asphalt and brick present.		0.2 0.4 0.6 0.8 1.0 1.2 1.4 1.6		STP2-1					No visual or olfactory indications of contamination throughout profile.
FILL Soft, brown gravelly clay. Gravel is fine - coarse, subangular - round of blue metal and river pebbles.		1.8		STP2-2					
NATURAL Very stiff, orange / red, CLAY.		2.0 2.2							Natural layer consistent with base of stockpile.
End of hole @ 2.3m (Natural layer encountered).		2.4 2.6 2.8 3.0							

NOTE: This bore log is for environmental purposes only and is not intended to provide geotechnical information.

Geological Borelog

ENVIRONMENTAL EARTH SCIENCES
CONTAMINATION RESOLVED

LOCATION: Eastern Creek		Borehole Log: STP3	Logged by: LD
SURFACE ELEVATION:	JOB NUMBER: 118069		
GROUNDWATER: -	DATUM:	PROJECT: Light Horse Junction	Proj. Manager: CN
DRILL METHOD: Excavator	DATE DRILLED: 29/6/18		

STRATIGRAPHY	GRAPHIC LOG	Depth metres	Sample Depth	Moisture Content	PID/FID Background	PID/FID Reading	pH - soil	pH - water	Comments
FILL Soft, brown, gravelly clay. Gravel is fine - coarse, subangular - rounded, of crushed sandstoneand river pebbles.		0.2 0.4	—	STP3-2					No visual or olfactory indications of contamination throughout profile.
FILL Very stiff, brown, slightly gravelly clay. Gravel is fine - coarse, angular - subrounded of sandstone, ceramic tile, blue metal. Cobbles of sandstone present. Geofabric, wire and plastic sheeting present.		0.6 0.8 1.0 1.2 1.4 1.6 1.8 2.0	—	STP3-1					
NATURAL Hard, light brown / grey, mottled CLAY.		2.2 2.4							Natural layer consistent with base of stockpile.
End of hole @ 2.5m (Natural layer encountered).		2.6 2.8 3.0							

NOTE: This bore log is for environmental purposes only and is not intended to provide geotechnical information.

Geological Borelog

ENVIRONMENTAL EARTH SCIENCES
CONTAMINATION RESOLVED

LOCATION: Eastern Creek - Area of uncontrolled fill		Borehole Log: STP4	Logged by: LD
SURFACE ELEVATION:	JOB NUMBER: 118069		
GROUNDWATER: -	DATUM:	PROJECT: Light Horse Junction	Proj. Manager: CN
DRILL METHOD: Excavator	DATE DRILLED: 29/6/18		

STRATIGRAPHY	GRAPHIC LOG	Depth metres	Sample Depth	Moisture Content	PID/FID Background	PID/FID Reading	pH - soil	pH - water	Comments
FILL Stiff, brown / yellow, gravelly clay. Gravel is fine - coarse, rounded river pebbles. Plastic sheeting is present.		0.2	—	STP4-1					No visual or olfactory indications of contamination throughout profile.
NATURAL Loose, light brown / grey, SILTY CLAY.		0.4							Natural layer consistent with base of stockpile.
End of hole @ 0.6m (Natural layer encountered).		0.6 0.8 1.0 1.2 1.4 1.6 1.8 2.0 2.2 2.4 2.6 2.8 3.0							

NOTE: This bore log is for environmental purposes only and is not intended to provide geotechnical information.

Geological Borelog

ENVIRONMENTAL EARTH SCIENCES
CONTAMINATION RESOLVED

LOCATION: Eastern Creek - Ferrers Road		Borehole Log: TP1	Logged by: LD
SURFACE ELEVATION:	JOB NUMBER: 118069		
GROUNDWATER: -	DATUM:	PROJECT: Light Horse Junction	Proj. Manager: CN
DRILL METHOD: Excavator	DATE DRILLED: 29/6/18		

STRATIGRAPHY	GRAPHIC LOG	Depth metres	Sample Depth	Moisture Content	PID/FID Background	PID/FID Reading	pH - soil	pH - water	Comments
FILL Loose, brown, silty, clayey sand with rootlets.		0.2							No visual or olfactory indications of contamination throughout profile.
FILL Stiff, brown / yellow mottled, gravelly clay. Gravel is fine - coarse, angular - subangular building rubble (brick, concrete, asphalt, glass). Boulders of shale present.		0.4 0.6 0.8 1.0 1.2 1.4 1.6	—	TP1-1					
NATURAL Loose, brown / grey, SILTY CLAY.		1.8 2.0							
End of hole @ 2m (Natural layer encountered).		2.2 2.4 2.6 2.8 3.0							

NOTE: This bore log is for environmental purposes only and is not intended to provide geotechnical information.

Geological Borelog

ENVIRONMENTAL EARTH SCIENCES
CONTAMINATION RESOLVED

LOCATION: Eastern Creek - Ferrers Road		Borehole Log: TP2	Logged by: LD
SURFACE ELEVATION:	JOB NUMBER: 118069		
GROUNDWATER: -	DATUM:	PROJECT: Light Horse Junction	Proj. Manager: CN
DRILL METHOD: Excavator	DATE DRILLED: 29/6/18		

STRATIGRAPHY	GRAPHIC LOG	Depth metres	Sample Depth	Moisture Content	PID/FID Background	PID/FID Reading	pH - soil	pH - water	Comments
FILL Loose, light brown, silty, clayey sand, with rootlets.				TP2-1					No visual or olfactory indications of contamination throughout profile.
FILL Firm, grey / black, clay, with asphalt gravels.		0.2		TP2-2					
NATURAL Very stiff, orange and grey mottled, CLAY.		0.4							
End of hole @ 0.6 m (Natural layer encountered).		0.6							
		0.8							
		1.0							
		1.2							
		1.4							
		1.6							
		1.8							
		2.0							
		2.2							
		2.4							
		2.6							
		2.8							
		3.0							

NOTE: This bore log is for environmental purposes only and is not intended to provide geotechnical information.

Geological Borelog

ENVIRONMENTAL EARTH SCIENCES
CONTAMINATION RESOLVED

LOCATION: Eastern Creek - Ferrers Road		Borehole Log: TP3	Logged by: LD
SURFACE ELEVATION:	JOB NUMBER: 118069		
GROUNDWATER: -	DATUM:	PROJECT: Light Horse Junction	Proj. Manager: CN
DRILL METHOD: Excavator	DATE DRILLED: 29/6/18		

STRATIGRAPHY	GRAPHIC LOG	Depth metres	Sample Depth	Moisture Content	PID/FID Background	PID/FID Reading	pH - soil	pH - water	Comments
FILL Soft, brown, silty, sandy clay with rootlets.									No visual or olfactory indications of contamination throughout profile.
FILL Firm, yellow / grey, clay, with dark grey mottles.		0.2		TP3-1					Tile and brick gravels on nearby surface.
NATURAL Hard, dark orange, CLAY.		0.4							
End of hole @ 0.5 m (Natural layer encountered).		0.6							
		0.8							
		1.0							
		1.2							
		1.4							
		1.6							
		1.8							
		2.0							
		2.2							
		2.4							
		2.6							
		2.8							
		3.0							

NOTE: This bore log is for environmental purposes only and is not intended to provide geotechnical information.

Geological Borelog

ENVIRONMENTAL EARTH SCIENCES
CONTAMINATION RESOLVED

LOCATION: Eastern Creek - Ferrers Road		Borehole Log: TP4	Logged by: LD
SURFACE ELEVATION:	JOB NUMBER: 118069		
GROUNDWATER: -	DATUM:	PROJECT: Light Horse Junction	Proj. Manager: CN
DRILL METHOD: Excavator	DATE DRILLED: 29/6/18		

STRATIGRAPHY	GRAPHIC LOG	Depth metres	Sample Depth	Moisture Content	PID/FID Background	PID/FID Reading	pH - soil	pH - water	Comments
FILL Loose, brown, sandy, silty clay, with rootlets.		0.2							No visual or olfactory indications of contamination throughout profile.
FILL Firm, grey / yellow, clay, with orange mottles.		0.4	—	TP4-1					
NATURAL Stiff, dark orange, CLAY.		0.6							
End of hole @ 0.6 m (Natural layer encountered).		0.8 1.0 1.2 1.4 1.6 1.8 2.0 2.2 2.4 2.6 2.8 3.0							

NOTE: This bore log is for environmental purposes only and is not intended to provide geotechnical information.

Geological Borelog

ENVIRONMENTAL EARTH SCIENCES
CONTAMINATION RESOLVED

LOCATION: Eastern Creek - Ferrers Road		Borehole Log: TP5	Logged by: LD
SURFACE ELEVATION:	JOB NUMBER: 118069		
GROUNDWATER: -	DATUM:	PROJECT: Light Horse Junction	Proj. Manager: CN
DRILL METHOD: Excavator	DATE DRILLED: 29/6/18		

STRATIGRAPHY	GRAPHIC LOG	Depth metres	Sample Depth	Moisture Content	PID/FID Background	PID/FID Reading	pH - soil	pH - water	Comments
NATURAL Loose, brown, SILTY SANDY CLAY, with rootlets. NATURAL Hard, brown-yellow, CLAY. End of hole @ 0.45 m (Natural layer encountered).		0.2 0.4 0.6 0.8 1.0 1.2 1.4 1.6 1.8 2.0 2.2 2.4 2.6 2.8 3.0	—	TP5-1					No visual or olfactory indications of contamination throughout profile.

NOTE: This bore log is for environmental purposes only and is not intended to provide geotechnical information.

Geological Borelog

ENVIRONMENTAL EARTH SCIENCES
CONTAMINATION RESOLVED

LOCATION: Eastern Creek - Ferrers Road		Borehole Log: TP6	Logged by: LD
SURFACE ELEVATION:	JOB NUMBER: 118069		
GROUNDWATER: -	DATUM:	PROJECT: Light Horse Junction	Proj. Manager: CN
DRILL METHOD: Excavator	DATE DRILLED: 29/6/18		

STRATIGRAPHY	GRAPHIC LOG	Depth metres	Sample Depth	Moisture Content	PID/FID Background	PID/FID Reading	pH - soil	pH - water	Comments
FILL Loose, brown, sandy silty clay, with rootlets.									No visual or olfactory indications of contamination throughout profile.
FILL Stiff, brown, clay, with gravels of brick, shell, sandstone and smooth red stones.		0.2		TP6-1					
NATURAL Stiff, light brown, SILTY CLAY.		0.4		TP6-2					
NATURAL Firm, brown, gravelly CLAY.									
NATURAL Firm, pale brown, CLAY.		0.6							
End of hole @ 0.5 m (Natural layer encountered).		0.8							
		1.0							
		1.2							
		1.4							
		1.6							
		1.8							
		2.0							
		2.2							
		2.4							
		2.6							
		2.8							
		3.0							

NOTE: This bore log is for environmental purposes only and is not intended to provide geotechnical information.

APPENDIX C: DEVELOPMENT DESIGN DRAWINGS

LIGHT HORSE INTERCHANGE BUSINESS HUB
EASTERN CREEK, NSW (SSD9667)
CIVIL ENGINEERING WORKS

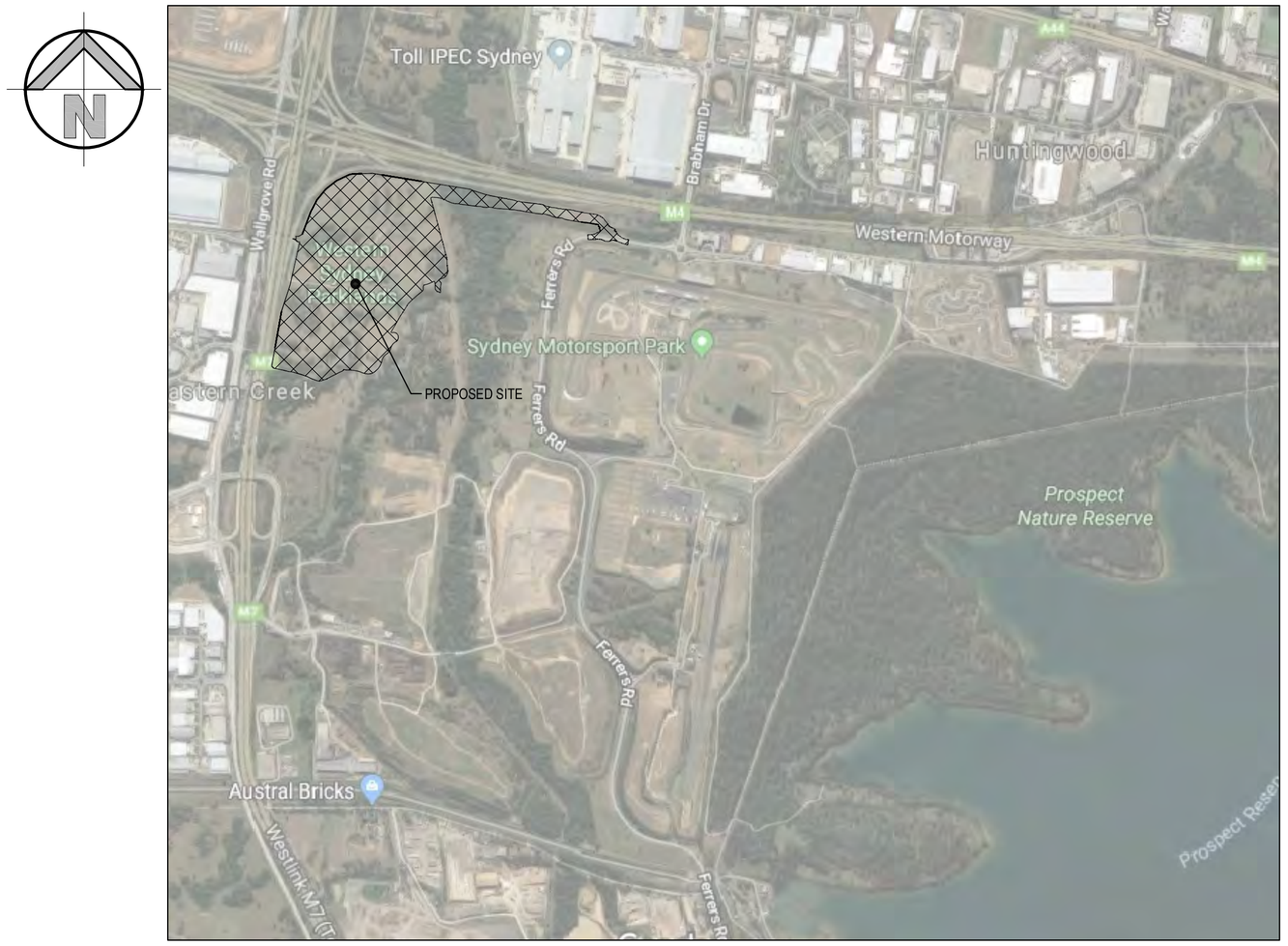

LOCALITY SKETCH

SCALE: N.T.S.

DRAWING SCHEDULE	
18652_SSDA_C000	COVER SHEET, DRAWING SCHEDULE AND LOCALITY SKETCH
18652_SSDA_C010	STANDARD NOTES
18652_SSDA_C100	GENERAL ARRANGEMENT PLAN
18652_SSDA_C101	DETAIL PLAN - SHEET 1 OF 9
18652_SSDA_C102	DETAIL PLAN - SHEET 2 OF 9
18652_SSDA_C103	DETAIL PLAN - SHEET 3 OF 9
18652_SSDA_C104	DETAIL PLAN - SHEET 4 OF 9
18652_SSDA_C105	DETAIL PLAN - SHEET 5 OF 9
18652_SSDA_C106	DETAIL PLAN - SHEET 6 OF 9
18652_SSDA_C107	DETAIL PLAN - SHEET 7 OF 9
18652_SSDA_C108	DETAIL PLAN - SHEET 8 OF 9
18652_SSDA_C109	DETAIL PLAN - SHEET 9 OF 9
18652_SSDA_C150	ROAD 1 LONGITUDINAL SECTION - SHEET 1 OF 2
18652_SSDA_C151	ROAD 1 LONGITUDINAL SECTION - SHEET 2 OF 2
18652_SSDA_C160	SITE SECTIONS - SHEET 1 OF 2
18652_SSDA_C161	SITE SECTIONS - SHEET 2 OF 2
18652_SSDA_C200	STORMWATER MISCELLANEOUS DETAILS AND PIT LID SCHEDULE
18652_SSDA_C201	STORMWATER MISCELLANEOUS DETAILS
18652_SSDA_C240	BASIN DETAILS - SHEET 1 OF 2
18652_SSDA_C241	BASIN DETAILS - SHEET 2 OF 2
18652_SSDA_C250	CATCHMENT PLAN
18652_SSDA_C330	BRIDGE CONCEPT PLAN
18652_SSDA_C331	BRIDGE CONCEPT SECTION
18652_SSDA_C600	B-DOUBLE VEHICLE TURNING PATHS - SHEET 1 OF 8
18652_SSDA_C601	B-DOUBLE VEHICLE TURNING PATHS - SHEET 2 OF 8
18652_SSDA_C602	B-DOUBLE VEHICLE TURNING PATHS - SHEET 3 OF 8
18652_SSDA_C603	B-DOUBLE VEHICLE TURNING PATHS - SHEET 4 OF 8
18652_SSDA_C604	B-DOUBLE VEHICLE TURNING PATHS - SHEET 5 OF 8
18652_SSDA_C605	B-DOUBLE VEHICLE TURNING PATHS - SHEET 6 OF 8
18652_SSDA_C606	B-DOUBLE VEHICLE TURNING PATHS - SHEET 7 OF 8
18652_SSDA_C607	B-DOUBLE VEHICLE TURNING PATHS - SHEET 8 OF 8
18652_SSDA_SE01	SEDIMENT AND EROSION CONTROL PLAN - SHEET 1 OF 2
18652_SSDA_SE02	SEDIMENT AND EROSION CONTROL PLAN - SHEET 2 OF 2
18652_SSDA_SE03	SEDIMENT AND EROSION CONTROL TYPICAL SECTIONS AND DETAILS
18652_SSDA_BE01	BULK EARTHWORKS CONCEPT CUT AND FILL PLAN - SHEET 1 OF 2
18652_SSDA_BE02	BULK EARTHWORKS CONCEPT CUT AND FILL PLAN - SHEET 2 OF 2
18652_SSDA_EX01	EXTERNAL WORKS PLAN - WALLGROVE ROAD

ISSUED FOR APPROVAL

REVISION	AMENDMENT	DRAWN	DESIGNED	DATE	REVISION	AMENDMENT	DRAWN	DESIGNED	DATE
04	ISSUED FOR APPROVAL	MS	NW	24.05.2019					
03	ISSUED FOR APPROVAL	MS	NW	09.04.2019					
02	ISSUED FOR CO-ORDINATION	IK	NW	05.04.2019					
01	PRELIMINARY	IK	NW	29.03.2019					

Client
WESTERN SYDNEY PARKLANDS TRUST

Architect
NETTLETONTRIBE

This drawing and design remains the property of Henry & Hymas and may not be copied in whole or in part without the prior written approval of Henry & Hymas.

Level 5,
79 Victoria Avenue
Chatswood NSW 2067

Telephone
+61 2 9417 8400
Facsimile
+61 2 9417 8337
Email
email@hhconsult.com.au
Web
www.henryandhymas.com.au

henry&hymas

Project
LIGHT HORSE INTERCHANGE BUSINESS HUB
EASTERN CREEK, NSW (SSD9667)

Drawn	Designed	Date
M.Stimova	L.Caha	FEB 2019
Checked	Approved	Scale @A1
N.Wetzlar	A.Francis	NTS

Title
COVER SHEET, DRAWING SCHEDULE
AND LOCALITY SKETCH

Drawing number
18652_SSDA_C000

Revision
04

GENERAL NOTES:

1. ALL WORK TO BE CARRIED OUT IN ACCORDANCE WITH BLACKTOWN CITY COUNCIL SPECIFICATION. CONTRACTOR TO OBTAIN AND RETAIN A COPY ON SITE DURING THE COURSE OF THE WORKS.

2. ALL NEW WORKS ARE TO MAKE A SMOOTH JUNCTION WITH EXISTING CONDITIONS AND MARRY IN A 'WORKMANLIKE' MANNER.

3. THE CONTRACTOR IS TO VERIFY THE LOCATION OF ALL SERVICES WITH EACH RELEVANT AUTHORITY. ANY DAMAGE TO SERVICES SHALL BE RECTIFIED BY THE CONTRACTOR OR THE RELEVANT AUTHORITY AT THE CONTRACTOR'S EXPENSE. SERVICES SHOWN ON THESE PLANS ARE ONLY THOSE EVIDENT AT THE TIME OF SURVEY OR AS DETERMINED FROM SERVICE DIAGRAMS. H & H CONSULTING ENGINEERS PTY. LTD CANNOT GUARANTEE THE INFORMATION SHOWN NOR ACCEPT ANY RESPONSIBILITY FOR INACCURACIES OR INCOMPLETE DATA.

4. SERVICES & ACCESSES TO THE EXISTING PROPERTIES ARE TO BE MAINTAINED IN WORKING ORDER AT ALL TIMES DURING CONSTRUCTION.

5. ADJUST EXISTING SERVICE COVERS TO SUIT NEW FINISHED LEVELS TO RELEVANT AUTHORITY REQUIREMENTS WHERE NECESSARY.

6. REINSTATE AND STABILISE ALL DISTURBED LANDSCAPED AREAS.

7. MINIMUM GRADE OF SUBSOIL SHALL BE 0.5% (1:200) FALL TO OUTLETS.

8. ALL TEMPORARY SEDIMENT AND EROSION CONTROL DEVICES ARE TO BE CONSTRUCTED, PLACED AND MAINTAINED IN ACCORDANCE WITH THE TECHNICAL SPECIFICATIONS, EROSION AND SEDIMENTATION CONTROL PLAN AND BLACKTOWN CITY COUNCIL REQUIREMENTS WHERE APPLICABLE.

9. CONTRACTOR TO CHECK AND CONFIRM SITE DRAINAGE CONNECTIONS ACROSS THE VERGE PRIOR TO COMMENCEMENT OF SITE DRAINAGE WORKS.

10. PROPERTIES AFFECTED BY THE WORKS ARE TO BE NOTIFIED IN ADVANCE WHERE DISRUPTION TO EXISTING ACCESS IS LIKELY.

SURVEY NOTES

THE EXISTING SITE CONDITIONS SHOWN ON THE FOLLOWING DRAWINGS HAVE BEEN INVESTIGATED BY THE SURVEYOR SPECIFIED IN THE TITLE BLOCK.
THE INFORMATION IS SHOWN TO PROVIDE A BASIS FOR DESIGN. HENRY AND HYMAS PTY. LTD. DOES NOT GUARANTEE THE ACCURACY OR COMPLETENESS OF THE SURVEY BASE OR ITS SUITABILITY AS A BASIS FOR CONSTRUCTION DRAWINGS.
SHOULD DISCREPANCIES BE ENCOUNTERED DURING CONSTRUCTION BETWEEN THE SURVEY DATA AND ACTUAL FIELD DATA, CONTACT HENRY AND HYMAS PTY. LTD. THE FOLLOWING NOTES HAVE BEEN TAKEN DIRECTLY FROM ORIGINAL SURVEY DOCUMENTS.

SUBGRADE PREPARATION - SITEWORKS.

1. THE EXISTING SURFACE IS TO BE STRIPPED OF ANY PAVEMENTS, TOPSOIL OR OBVIOUS UNSUITABLE MATERIAL.

2. EXCAVATE TO ACHIEVE SUBGRADE LEVELS WHERE NECESSARY.

3. THE EXPOSED SUBGRADE AFTER STRIPPING AND/ OR EXCAVATION IS TO BE PROOF ROLLED USING NOT FEWER THAN 5 PASSES OF A MINIMUM 8 TONNE DEAD WEIGHT STEEL SMOOTH-DRUM ROLLER UNDER THE SUPERVISION OF AN EXPERIENCED GEOTECHNICAL ENGINEER OR AN EXPERIENCED CIVIL ENGINEER. ANY AREAS ON THE SUBGRADE EXHIBITING EXCESSIVE DEFLECTION / MOVEMENT UNDER ROLLER TO BE EXCAVATED TO A MIN. DEPTH OF 0.5m AND REPLACED WITH APPROVED GRANULAR MATERIAL COMPACTED IN 250mm LOOSE LAYERS OR AS DIRECTED BY THE GEOTECHNICAL ENGINEER.

4. ENGINEERED FILL FOR REPLACEMENT OF SOFT OR HEAVING AREAS OR FOR BULK FILLING TO COMPRISE ESSENTIALLY OF GRANULAR MATERIALS (EG. EXCAVATED SHALE), WITH A PARTICLE SIZE NOT GREATER THAN 75mm DIAMETER. ENGINEERED FILL TO BE PLACED IN LAYERS NOT EXCEEDING 250mm LOOSE THICKNESS AND COMPACTED TO BETWEEN 98% AND 102% OF STANDARD MAXIMUM DRY DENSITY (SMDD) WITHIN ± 2% OF OPTIMUM MOISTURE CONTENT (OMC).

5. IMPORTED FILLING (IF REQUIRED) IS TO BE TO THE APPROVAL OF THE GEOTECHNICAL ENGINEER. THE CONTRACTOR IS TO NOMINATE THE SOURCE AND PROVIDE A SAMPLE FOR APPROVAL PRIOR TO IMPORTATION AND PLACEMENT ON SITE.

6. ALL FILL MATERIAL SHALL BE FROM A SOURCE APPROVED BY THE SUPERINTENDENT AND SHALL COMPLY WITH THE FOLLOWING.
FREE FORM ORGANIC AND PERISHABLE MATTER
MAXIMUM PARTICLE SIZE = 75mm
MAXIMUM PLASTICITY INDEX = 15%

SUBSOIL DRAINAGE NOTES

1. GENERALY PROVIDE SUBSOIL DRAINS TO INTERCEPT GROUNDWATER SEEPAGE AND PREVENT WATER BUILD-UP BEHIND WALLS AND UNDER FLOORS AND PAVEMENTS. CONNECT SUBSOIL TO SURFACE DRAINS OR TO THE STORMWATER DRAINAGE SYSTEM AS APPLICABLE.

2. PIPE DEPTH:
PROVIDE THE FOLLOWING MINIMUM CLEAR DEPTH, MEASURED TO THE CROWN OF THE PIPE, WHERE THE PIPE PASSES BELOW THE FOLLOWING ELEMENTS:

- 100mm BELOW FORMATION LEVEL OF THE PAVEMENT, KERB OR CHANNEL.
- 100mm BELOW THE AVERAGE GRADIENT OF THE BOTTOM OF FOOTINGS.

3. JOINTING:
AT JUNCTIONS OF SUBSOIL PIPES PROVIDE TEES, COUPLINGS OR ADAPTORS TO AS2439.1.

4. TRENCH WIDTH MINIMUM 300mm.

5. PIPE UNDERLAY
GENERAL: GRADE THE TRENCH FLOOR EVENLY TO THE GRADIENT OF THE PIPELINE. IF THE TRENCH FLOOR IS ROCK, CORRECT ANY IRREGULARITIES WITH COMPACTED BEDDING MATERIAL. BED PIPING ON A CONTINUOUS UNDERLAY OF BEDDING MATERIAL, AT LEAST 75mm THICK AFTER COMPACTION. LAY THE PIPE WITH ONE LINE OF PERFORATIONS AT THE BOTTOM.

CHASES: IF NECESSARY TO PREVENT PROJECTIONS SUCH AS SOCKETS AND FLANGES FROM BEARING ON THE TRENCH BOTTOM OR UNDERLAY.

6. PIPE SURROUNDS:
GENERAL: PLACE THE MATERIAL IN THE PIPE SURROUND IN LAYERS SMALLER THAN OR EQUAL TO 200mm LOOSE THICKNESS, AND COMPACT WITHOUT DAMAGING OR DISPLACING PIPING.
DEPTH OF OVERLAY: TO THE UNDERSIDE OF THE BASE OF OVERLYING STRUCTURES SUCH AS PAVEMENTS, SLABS AND CHANNELS TO WITHIN 150mm OF THE FINISHED SURFACE OF UNPAVED OR LANDSCAPED AREAS.

7. FILTER SOCKS:
PROVIDE POLYESTER PERMEABLE SOCKS CAPABLE OF RETAINING PARTICLES OF 0.25mm SIZES. SECURELY FIT OR JOIN THE SOCK AT EACH JOINT.

SITEWORKS NOTES

- DATUM : A.H.D.
- ORIGIN OF LEVELS : REFER TO BENCH OR STATE SURVEY MARKS WHERE SHOWN ON PLAN.
- CONTRACTOR MUST VERIFY ALL DIMENSIONS AND EXISTING LEVELS ON SITE PRIOR TO THE COMMENCEMENT OF WORK.
- ALL WORKS TO BE UNDERTAKEN IN ACCORDANCE WITH THE DETAILS SHOWN ON THE DRAWINGS & THE DIRECTIONS OF THE SUPERINTENDENT.
- EXISTING SERVICES UNLESS SHOWN ON THE SURVEY PLAN HAVE BEEN PLOTTED FROM SERVICES SEARCH PLANS AND AS SUCH THEIR ACCURACY CANNOT BE GUARANTEED. IT IS THE RESPONSIBILITY OF THE CONTRACTOR TO ESTABLISH THE LOCATION AND LEVEL OF ALL EXISTING SERVICES PRIOR TO THE COMMENCEMENT OF ANY WORK. ANY DISCREPANCIES SHALL BE REPORTED TO THE SUPERINTENDENT. CLEARANCES SHALL BE OBTAINED FROM THE RELEVANT SERVICE AUTHORITY.
- WHERE NEW WORKS ABUT EXISTING THE CONTRACTOR SHALL ENSURE THAT A SMOOTH EVEN PROFILE, FREE FROM ABRUPT CHANGES IS ACHIEVED.
- THE CONTRACTOR SHALL ARRANGE ALL SURVEY SETOUT TO BE CARRIED OUT BY A REGISTERED SURVEYOR.
- CARE IS TO BE TAKEN WHEN EXCAVATING NEAR EXISTING SERVICES. NO MECHANICAL EXCAVATION IS TO BE UNDERTAKEN OVER TELSTRA OR ELECTRICAL SERVICES. HAND EXCAVATE IN THESE AREAS.
- CONTRACTOR TO OBTAIN AUTHORITY APPROVALS WHERE APPLICABLE.
- MAKE SMOOTH TRANSITION TO EXISTING SURFACES AND MAKE GOOD.
- THESE PLANS SHALL BE READ IN CONJUNCTION WITH APPROVED LANDSCAPE, ARCHITECTURAL, STRUCTURAL, HYDRAULIC AND MECHANICAL DRAWINGS AND SPECIFICATIONS
OR WRITTEN INSTRUCTIONS THAT MAY BE ISSUED RELATING TO DEVELOPMENT AT THE SITE.
- TRENCHES THROUGH EXISTING ROAD AND CONCRETE PAVEMENTS SHALL BE SAWCUT TO FULL DEPTH OF CONCRETE AND A MINIMUM OF 50mm IN BITUMINOUS PAVING.
- ALL BRANCH GAS AND WATER SERVICES UNDER DRIVEWAYS AND BRICK PAVING SHALL BE LOCATED IN Ø80 uPVC SEWER GRADE CONDUITS EXTENDING A MINIMUM OF 500mm BEYOND EDGE OF PAVING.
- GRADES TO PAVEMENTS TO BE AS IMPLIED BY RL'S ON PLAN . GRADE EVENLY BETWEEN NOMINATED RL'S. AREAS EXHIBITING PONDING GREATER THAN 5mm DEPTH WILL NOT BE ACCEPTED UNLESS IN A DESIGNATED SAG POINT.
- ALL COVERS AND GRATES ETC TO EXISTING SERVICE UTILITIES ARE TO BE ADJUSTED TO SUIT NEW FINISHED SURFACE LEVELS WHERE APPLICABLE.

DRAINAGE NOTES:

1. ALL STORMWATER WORK TO COMPLY WITH AS 3500 PART 3.

2. CONTRACTOR SHALL BE RESPONSIBLE FOR MAINTAINING THE MINIMUM COVER OF 600mm ON ALL PIPES.

3. PROTECTION OF PIPES DUE TO LOADS EXCEEDING W7 WHEEL LOAD SHALL BE THE CONTRACTOR'S RESPONSIBILITY.

4. BEDDING TYPE SHALL BE TYPE H2 FOR RCP. WHERE NECESSARY THE OVERLAY ZONE SHALL BE REDUCED TO ACCOMMODATE PAVEMENT REQUIREMENTS. REFER TO THIS DRAWING FOR DETAILS.

5. MINIMUM COVER OVER EXISTING PIPES FOR PROTECTION DURING CONSTRUCTION SHALL BE 800mm.

6. NO CONSTRUCTION LOADS SHALL BE APPLIED TO PLASTIC PIPES.

7. FINISHED SURFACE LEVELS SHOWN ON LAYOUT PLAN DRGS TAKE PRECEDENCE OVER DESIGN DRAINAGE SURFACE LEVELS.

8. ALL PIPES UP TO AND INCLUDING 300 DIA. SHALL BE SOLVENT OR RUBBER RING JOINTED PVC CLASS SH PIPE TO AS1260. ALL OTHER PIPES TO BE RCP USING CLASS 2 RUBBER RING JOINTED PIPE. HARDIES FRC PIPE MAY BE USED IN LIEU OF RCP IF DESIRED IN GROUND. ALL AERIAL PIPES TO BE PVC CLASS SH.

9. ALL PITS IN NON TRAFFICABLE AREAS TO BE PREFABRICATED POLYESTER CONCRETE "POLYCRETE" WITH "LIGHT DUTY" CLASS B GALV. MILD STEEL GRATING AND FRAME.
ALL PITS IN TRAFFICABLE AREAS (CLASS "D" LOADING MAX) TO HAVE 150mm THICK CONCRETE WALLS AND BASE CAST IN-SITU f'c=32 MPa, REINFORCED WITH N12-200 BOTH LOADING WAYS CENTRALLY PLACE .U.N.O. ON SEPARATE DESIGN DRAWINGS IN THIS SET. GALV.MILD STEEL GRATING AND FRAME TO SUIT DESIGN LOADING. PRECAST PITS, RECTANGULAR OR CIRCULAR IN SHAPE, MAY BE USED IN LIEU AND SHALL COMPLY WITH RELEVANT AUSTRALIAN STANDARDS.

10. ALL PITS, GRATINGS AND FRAMES SHALL BE INSTALLED IN ACCORDANCE WITH THE MANUFACTURERS SPECIFICATION AND TO BE IN ACCORDANCE WITH AS3500.3 AND AS3996.
11. PIT CHAMBER DIMENSIONS ARE TO BE SELECTED TO SATISFY THE FOLLOWING:
- PIPE SIZE
- DEPTH TO INVERT
- SKEW ANGLE
REFER TYPICAL PIT CHAMBER DETAILS BELOW
IF PIT LID SIZE IS SMALLER THAN THE PIT CHAMBER SIZE THEN THE PIT LID IS TO BE CONSTRUCTED ON THE CORNER OF THE PIT CHAMBER WITH THE STEP IRONS DIRECTLY BELOW. ALTERNATIVELY THE PIT LID TO BE USED, IS TO BE THE SAME SIZE AS THE PIT CHAMBER.

12. FOR PIPE SIZES GREATER THAN Ø300mm, PIT FLOOR IS TO BE BENCHED TO FACILITATE FLOW.

13. GALVANISED STEP IRONS SHALL BE PROVIDED AT 300 CTS FOR PITS HAVING A DEPTH EXCEEDING 1200mm. SUBSOIL DRAINAGE PIPE SHALL BE PROVIDED IN PIPE TRENCHES ADJACENT TO INLET PIPES. (MINIMUM LENGTH 3m).

14. ALL SUBSOIL PIPES SHALL BE 100mm SLOTTED PVC IN A FILTER SOCK, UNO, WITH 3m INSTALLED UPSTREAM OF ALL PITS.

15. ALL PIPEWORK SHALL HAVE MINIMUM DIAMETER 100.

16. MINIMUM GRADE FOR ROOFWATER DRAINAGE LINES SHALL BE 1%.

17. ALL PIPE JUNCTIONS AND TAPER UP TO AND INCLUDING 300 DIA. SHALL BE VIA PURPOSE MADE FITTINGS.

18. ALL ROOF DRAINAGE TO BE INSTALLED IN ACCORDANCE WITH AS3500, PART 3. TESTING TO BE UNDERTAKEN AND REPORTS PROVIDED TO THE SUPERINTENDENT.

19. LOCATION OF THE DIRECT DOWN PIPE CONNECTIONS MAY VARY ON SITE TO SUIT SITE CONDITIONS, WHERE CONNECTION SHOWN ON LONG SECTIONS CHAINAGES ARE INDICATIVE ONLY.

20. PITS IN EXCESS OF 1.5 m DEEP TO HAVE WALL AND FLOOR THICKNESS INCREASED TO 200mm. REINFORCED WITH N12@200 CTS CENTRALLY PLACED BOTH WAYS THROUGHOUT U.N.O.ON SEPARATE DESIGN DRAWINGS IN THIS SET. IF DEPTH EXCEEDS 5m CONTACT ENGINEER.

21. SUBSOIL DRAINAGE LINES FOR LANDSCAPE AREA NOT SHOWN ON THESE DRAWINGS. REFER TO LANDSCAPING PLANS FOR DETAILS.

22. ALL STORMWATER PITS TO HAVE Ø100 uPVC SLOTTED SUBSOIL PIPES CONNECTED TO THEM. THESE SUBSOILS TO EXTEND 3m UPSTREAM OF THE PIT AT A MINIMUM GRADE.

ISSUED FOR APPROVAL

REVISION	AMENDMENT	DRAWN	DESIGNED	DATE
03	ISSUED FOR APPROVAL	MS	NW	09.04.2019
02	ISSUED FOR CO-ORDINATION	IK	NW	05.04.2019
01	PRELIMINARY	IK	NW	29.03.2019

Client: WESTERN SYDNEY PARKLANDS TRUST

Architect: NETTLETONTRIBE

This drawing and design remains the property of Henry & Hymas and may not be copied in whole or in part without the prior written approval of Henry & Hymas.

Level 5,
79 Victoria Avenue
Chatswood NSW 2067

Telephone +61 2 9417 8400
Facsimile +61 2 9417 8337
Email email@hhconsult.com.au
Web www.henryandhymas.com.au

henry&hymas

Project: LIGHT HORSE INTERCHANGE BUSINESS HUB
EASTERN CREEK, NSW (SSD9667)

Title: STANDARD NOTES

Drawn	Designed	Date
M.Stimova	L.Caha	FEB 2019
Checked	Approved	Scale @A1
N.Wetzlar	A.Francis	NTS

Drawing number: 18652_SSDA_C010

Revision: 03



LEGEND

- PROPOSED LIMIT OF WORK
- SITE/ LOT BOUNDARY
- PROPOSED RIDGE LINE (R)
- PROPOSED VALLEY LINE (V)
- PROPOSED SUBSOIL LINE (SS)
- PROPOSED JUNCTION PITS
- PROPOSED SURFACE INLET PITS
- PROPOSED LINTEL ONGRADE & SAG PITS
- PROPOSED PIT TAG (LINE LETTER / PIT NUMBER, e.g. A-1)
- EXISTING STORMWATER PIPE
- PROPOSED STORMWATER PIPE
- PROPOSED BATTER LINE
- EXISTING CONTOURS (54)
- PROPOSED CONTOURS (49.50)
- PROPOSED COLLECTION LINE
- PROPOSED RETAINING WALL (RW)
- PROPOSED DESIGN SPOT LEVEL (45.50)
- PROPOSED CATCH DRAIN
- PROPOSED FLUSHING POINT (FP)
- PROPOSED INTERMEDIATE RISER (IR)

0 50 100 150 200 250 300m
60 40 20
SCALE 1:3000

GENERAL ARRANGEMENT PLAN

SCALE 1:3000

ISSUED FOR APPROVAL

REVISION	AMENDMENT	DRAWN	DESIGNED	DATE
03	ISSUED FOR APPROVAL	MS	NW	09.04.2019
02	ISSUED FOR CO-ORDINATION	IK	NW	05.04.2019
01	PRELIMINARY	IK	NW	29.03.2019

Client: WESTERN SYDNEY PARKLANDS TRUST

NETTLETONTRIBE

This drawing and design remains the property of Henry & Hymas and may not be copied in whole or in part without the prior written approval of Henry & Hymas.

Level 5,
79 Victoria Avenue
Chatswood NSW 2067

Telephone +61 2 9417 8400
Facsimile +61 2 9417 8337
Email email@hhconsult.com.au
Web www.henryandhymas.com.au

henry&hymas

Project: LIGHT HORSE INTERCHANGE BUSINESS HUB
EASTERN CREEK, NSW (SSD9667)

Title: GENERAL ARRANGEMENT PLAN

Drawn	Designed	Date
M.Stimova	L.Caha	FEB 2019
Checked	Approved	Scale @A1
N.Wetzlar	A.Francis	1:3000

Drawing number: 18652_SSDA_C100

Revision: 03

FOR CONTINUATION REFER TO DWG. 18652_SSDA_C102

FOR CONTINUATION REFER TO DWG. 18652_SSDA_C101

FOR CONTINUATION REFER TO DWG. 18652_SSDA_C101

FOR CONTINUATION REFER TO DWG. 18652_SSDA_C106

ESKDALE CREEK

REEDY CREEK

TOE OF BATTER

TOP OF BATTER

1 IN 4 BATTER

FALL TO DRAIN

FALL TO ROAD

EXISTING 6m WIDE SEWER EASEMENT

PROPOSED STUB CONNECTION

PROPOSED STUB CONNECTION FOR LOT 1

PROPOSED STUB CONNECTION FOR LOT 6

PROPOSED CATCH DRAIN TO SEDIMENT BASIN. MIN 0.3%

EXISTING SEWER MANHOLE
EXISTING SEWER SIZE = DN600

EXISTING SEWER MANHOLE TO BE RAISED
EX.RL= 46.6
EX.IL= 42.41
EXISTING SEWER SIZE = DN600

DIVERSION POINT

AREAS SURROUNDING SHALLOW AND DEEP POOLS TO BE SHALLOW MARSH LAND. REFER TO ECOPLANNING ECOLOGY REPORT FOR PLANTING AND TREATMENT. REFER TO PLANTING SCHEDULE PROVIDED BY SITE IMAGE ON DRAWING SS18-3892.

SHALLOW POOL. REFER TO ECOPLANNING ECOLOGY REPORT FOR PLANTING AND TREATMENT. REFER TO PLANTING SCHEDULE PROVIDED BY SITE IMAGE ON DRAWING SS18-3892.

DEEP POOL. REFER TO ECOPLANNING ECOLOGY REPORT FOR PLANTING AND TREATMENT. REFER TO PLANTING SCHEDULE PROVIDED BY SITE IMAGE ON DRAWING SS18-3892.

MINOR DEPRESSION

BATTER 1 IN 4 MAX. TO EXISTING

LOT 6
FFL 50.20
PAD 49.80

LIMIT OF WORK

STORMWATER LINE

PROPOSED HEADWALL

SCOUR PROTECTION IN ACCORDANCE WITH BCC WSUD STANDARD DRAWING & RECOMMENDATION FROM ECO PLANNING REPORT FOR PLANNING AND TREATMENT.

CREEK

NATURALISED EDGE, NO BUND, HIGHER FLOWS ACTIVATE SURROUNDING FLOOD PLAIN

DENOTES SHALLOW POOL REFER TO ECOPLANNING ECOLOGY REPORT FOR PLANTING AND TREATMENT. REFER TO PLANTING SCHEDULE PROVIDED BY SITE IMAGE ON DRAWING SS18-3892.

DEEP POOL (-1.5m)

WQ-13

A-16

A-15

E-1

E-2

0 10 20 30 40 50m
10 8 6 4 2
SCALE 1:500

DETAIL PLAN
SCALE: 1:500

ISSUED FOR APPROVAL

REVISION	AMENDMENT	DRAWN	DESIGNED	DATE
04	ISSUED FOR APPROVAL	MS	NW	11.04.2019
03	ISSUED FOR APPROVAL	MS	NW	09.04.2019
02	ISSUED FOR CO-ORDINATION	IK	NW	05.04.2019
01	PRELIMINARY	IK	NW	28.03.2019

Client: WESTERN SYDNEY PARKLANDS TRUST

Architect: NETTLETONTRIBE

This drawing and design remains the property of Henry & Hymas and may not be copied in whole or in part without the prior written approval of Henry & Hymas.

Level 5,
79 Victoria Avenue
Chatswood NSW 2067

Telephone
+61 2 9417 8400
Facsimile
+61 2 9417 8337
Email
email@hhconsult.com.au
Web
www.henryandhymas.com.au

henry&hymas

Project: LIGHT HORSE INTERCHANGE BUSINESS HUB
EASTERN CREEK, NSW (SSD9667)

Title: DETAIL PLAN
SHEET 1 OF 9

Drawn	Designed	Date
M.Stimova	L.Caha	FEB 2019
Checked	Approved	Scale @A1
N.Wetzlar	A.Francis	1:500

Drawing number: 18652_SSDA_C101

Revision: 04

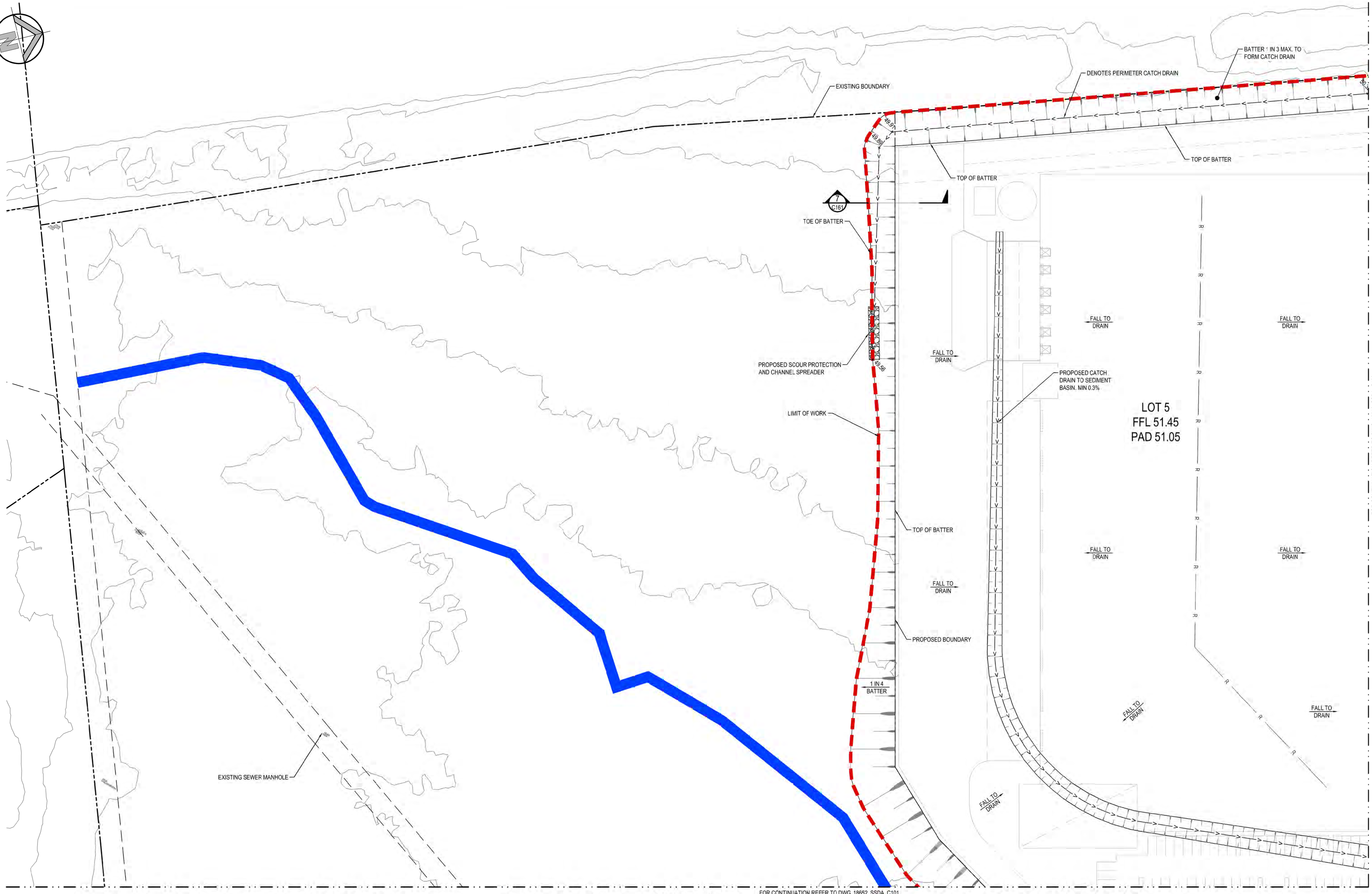

DETAIL PLAN

SCALE: 1:500

ISSUED FOR APPROVAL

REVISION	AMENDMENT	DRAWN	DESIGNED	DATE
03	ISSUED FOR APPROVAL	MS	NW	09.04.2019
02	ISSUED FOR CO-ORDINATION	IK	NW	05.04.2019
01	PRELIMINARY	IK	NW	29.03.2019

Client: WESTERN SYDNEY PARKLANDS TRUST

NETTLETONTRIBE

This drawing and design remains the property of Henry & Hymas and may not be copied in whole or in part without the prior written approval of Henry & Hymas.

Level 5,
79 Victoria Avenue
Chatswood NSW 2067

Telephone +61 2 9417 8400
Facsimile +61 2 9417 8337
Email email@hhconsult.com.au
Web www.henryandhymas.com.au

henry&hymas

Project: LIGHT HORSE INTERCHANGE BUSINESS HUB
EASTERN CREEK, NSW (SSD9667)

Title: DETAIL PLAN
SHEET 2 OF 9

Drawn	Designed	Date
M.Stimova	L.Caha	FEB 2019
Checked	Approved	Scale @A1
N.Wetzler	A.Francis	1:500

Drawing number: 18652_SSDA_C102

Revision: 03

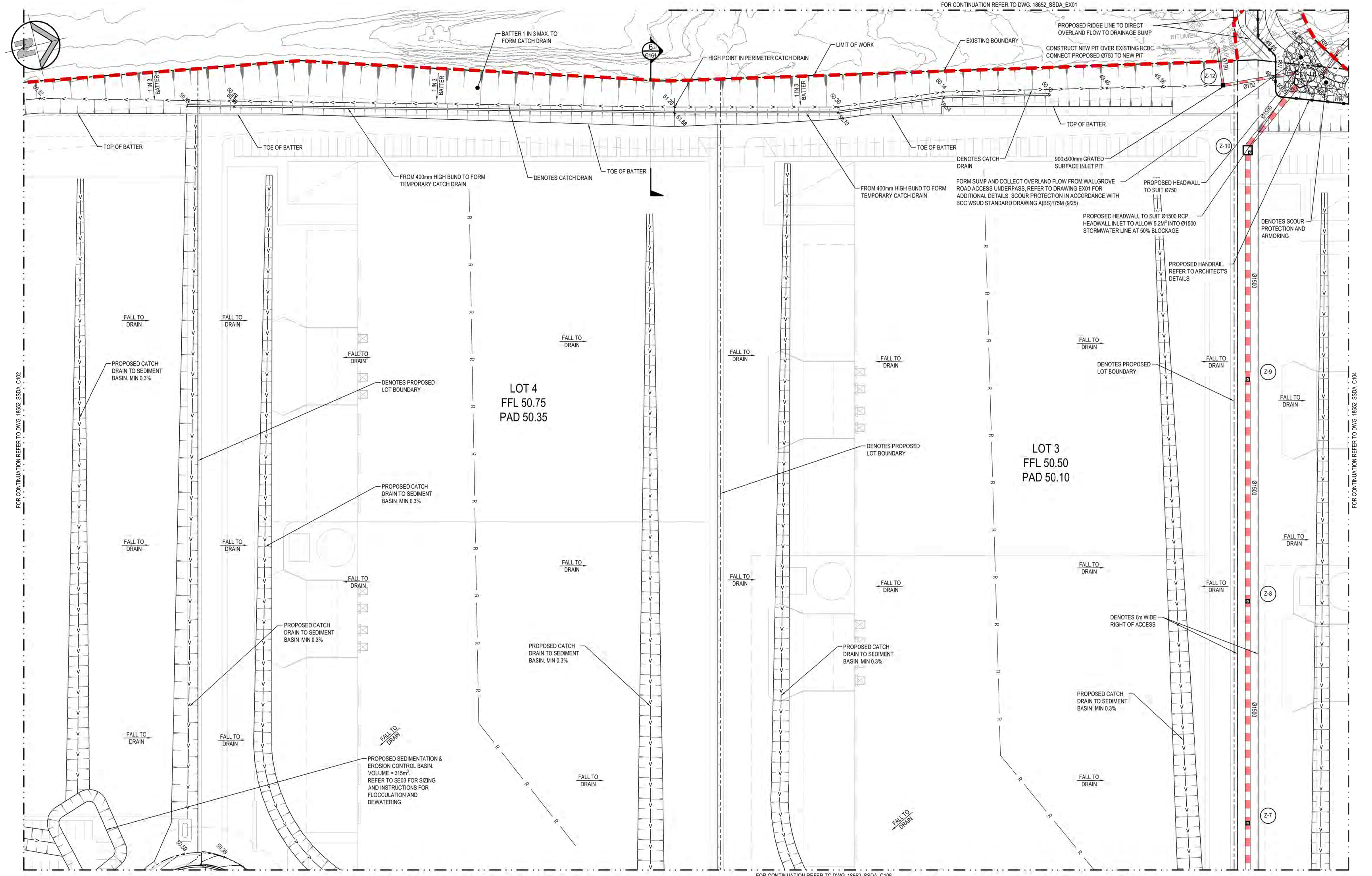

0 10 20 30 40 50m

10 8 6 4 2

SCALE 1:500

DETAIL PLAN

SCALE: 1:500

ISSUED FOR APPROVAL

REVISION	AMENDMENT	DRAWN	DESIGNED	DATE
03	ISSUED FOR APPROVAL	MS	NW	09.04.2019
02	ISSUED FOR CO-ORDINATION	IK	NW	05.04.2019
01	PRELIMINARY	IK	NW	28.03.2019

Client: WESTERN SYDNEY PARKLANDS TRUST

NETTLETONTRIBE

This drawing and design remains the property of Henry & Hymas and may not be copied in whole or in part without the prior written approval of Henry & Hymas.

Level 5,
79 Victoria Avenue
Chatswood NSW 2067

Telephone +61 2 9417 8400
Facsimile +61 2 9417 8337
Email email@hhconsult.com.au
Web www.henryandhymas.com.au

henry&hymas

Project: LIGHT HORSE INTERCHANGE BUSINESS HUB
EASTERN CREEK, NSW (SSD9667)

Title: DETAIL PLAN
SHEET 3 OF 9

Drawn	Designed	Date
M.Stimova	L.Caha	FEB 2019
Checked	Approved	Scale @A1
N.Wetzler	A.Francis	1:500

Drawing number: 18652_SSDA_C103

Revision: 03

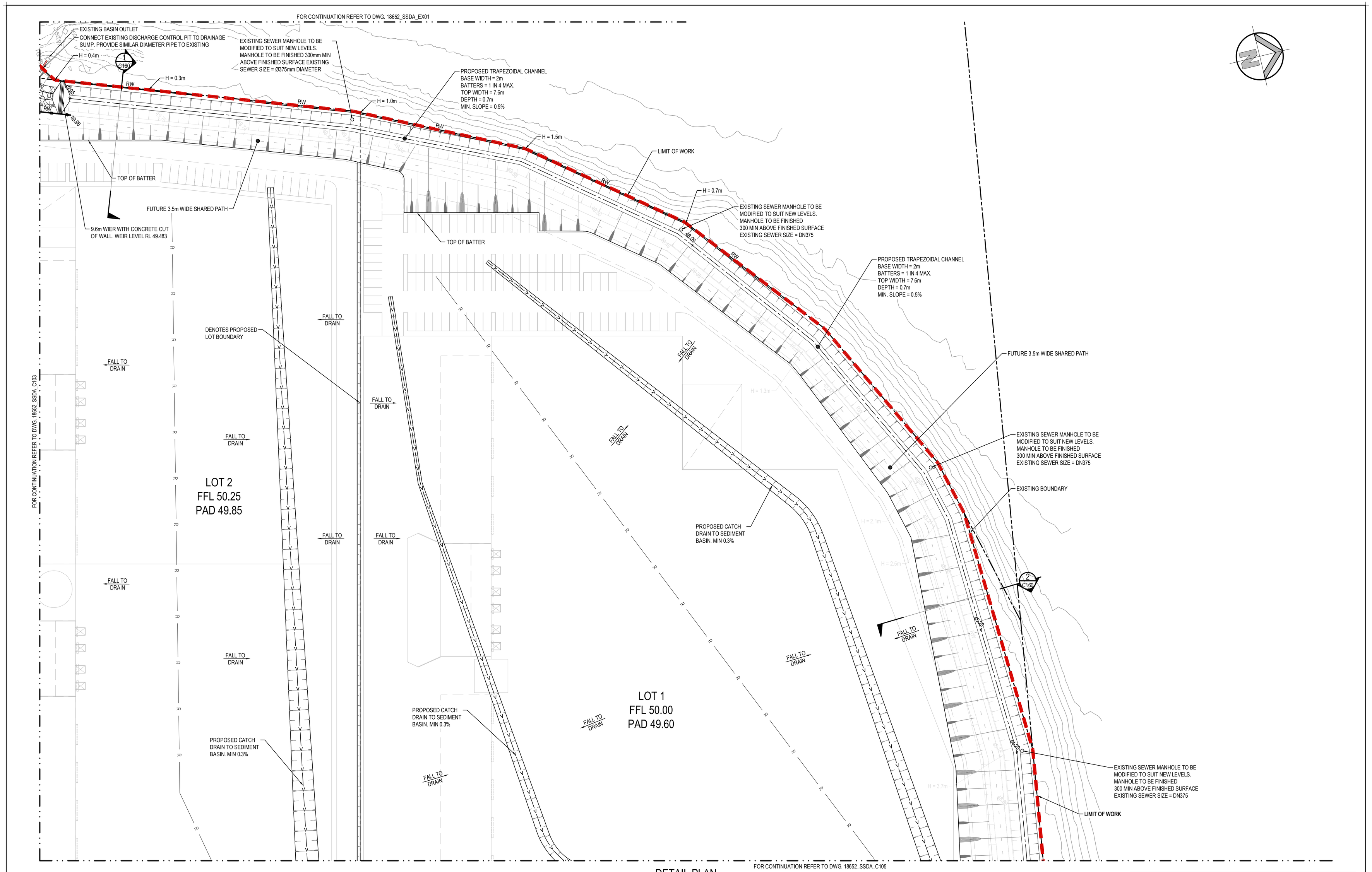

DETAIL PLAN

SCALE: 1:500

ISSUED FOR APPROVAL

REVISION	AMENDMENT	DRAWN	DESIGNED	DATE
03	ISSUED FOR APPROVAL	MS	NW	09.04.2019
02	ISSUED FOR CO-ORDINATION	IK	NW	05.04.2019
01	PRELIMINARY	IK	NW	29.03.2019

Client: WESTERN SYDNEY PARKLANDS TRUST

NETTLETONTRIBE

This drawing and design remains the property of Henry & Hymas and may not be copied in whole or in part without the prior written approval of Henry & Hymas.

Level 5, 79 Victoria Avenue Chatswood NSW 2067
Telephone +61 2 9417 8400
Facsimile +61 2 9417 8337
Email email@hhconsult.com.au
Web www.henryandhymas.com.au
henry&hymas

Project: LIGHT HORSE INTERCHANGE BUSINESS HUB EASTERN CREEK, NSW (SSD9667)

Title: DETAIL PLAN SHEET 4 OF 9

Drawn	Designed	Date
M.Stimova	L.Caha	FEB 2019
Checked	Approved	Scale @A1
N.Wetzlar	A.Francis	1:500

Drawing number: 18652_SSDA_C104

Revision: 03

FOR CONTINUATION REFER TO DWG. 18652_SSDA_C104

FOR CONTINUATION REFER TO DWG. 18652_SSDA_C106

FOR CONTINUATION REFER TO DWG. 18652_SSDA_C107

FOR CONTINUATION REFER TO DWG. 18652_SSDA_C108

15.5m WIDE ACCESS ROAD

EXISTING 6m WIDE SEWER EASEMENT

PROPOSED SEDIMENTATION & EROSION CONTROL BASIN. VOLUME = 243m³. REFER TO SE03 FOR SIZING AND INSTRUCTIONS FOR FLOCCULATION AND DEWATERING

PROPOSED CATCH DRAIN TO SEDIMENT BASIN. MIN 0.3%

PROPOSED STUB CONNECTION FOR LOT 2

PROPOSED STUB CONNECTION FOR LOT 1 AND LOT 2 SIDE ACCESS

PROPOSED STUB CONNECTION FOR LOT 1

PROPOSED STUB CONNECTION FOR LOT 7

2.4 x 1.2 RCBC

EXISTING SEWER MANHOLE TO BE RAISED
EX.RL= 44.84
EX.IL= 40.71
EXISTING SEWER SIZE = DN600

FUTURE 3.5m WIDE SHARED PATH

PROPOSED TRAPEZOIDAL CHANNEL
BASE WIDTH = 2m
BATTERS = 1 IN 4 MAX.
TOP WIDTH = 7.6m
DEPTH = 0.7m
MIN. SLOPE = 0.5%

PROPOSED SEDIMENTATION & EROSION CONTROL BASIN. VOLUME = 295m³. REFER TO SE03 FOR SIZING AND INSTRUCTIONS FOR FLOCCULATION AND DEWATERING

EXISTING SEWER MANHOLE TO BE MODIFIED TO SUIT NEW LEVELS. MANHOLE TO BE FINISHED 300 MIN ABOVE FINISHED SURFACE
EX. RL= 43.83
EX. IL= 40.14
EXISTING SEWER SIZE = DN600 & DN375

LIMIT OF WORK

LOT 7
FFL 49.50
PAD 49.10

PROPOSED SEDIMENTATION & EROSION CONTROL BASIN. VOLUME = 207m³. REFER TO SE03 FOR SIZING AND INSTRUCTIONS FOR FLOCCULATION AND DEWATERING

PROPOSED CATCH DRAIN TO SEDIMENT BASIN. MIN 0.3%

PROPOSED HEADWALL TO SUIT Ø375 PIPE

DENOTES PROPOSED CHECK DAM IN ACCORDANCE WITH BCC WSUD STANDARD DRAWING A(BS)175M(16/25)

INDICATIVE LINE OF INFRASTRUCTURE WORKS BATTER

Ø300 PERMEABLE CONCRETE PIPE. REFER TO DETAIL ON C240 FOR DETAILS

DIVERSION WEIR TO DIVERT TREATABLE FLOW RATE OF PROPOSED GPT

GPT CDS2028

CONCRETE OVERFLOW WEIR

PROVIDE 4m WIDE ACCESS PATH IN ACCORDANCE WITH BCC'S WSUD STANDARD DRAWINGS

DISPERSAL SYSTEM TO SLIT TRAP. FURTHER DETAILS TO BE PROVIDED

BATTER 1 IN 4 MAX.

TOP OF BATTER

SWALE TO BE GRADED TO MINIMISE CUT OVER EXISTING GAS EASEMENT

SLOPE STABILISATION IN ACCORDANCE WITH GEOTECHNICAL ADVICE

FALL TO DRAIN

H = 0.4m
H = 1.8m
H = 2.5m
H = 3.2m

0 10 20 30 40 50m
SCALE 1:500

DETAIL PLAN
SCALE: 1:500

ISSUED FOR APPROVAL

REVISION	AMENDMENT	DRAWN	DESIGNED	DATE
03	ISSUED FOR APPROVAL	MS	NW	09.04.2019
02	ISSUED FOR CO-ORDINATION	IK	NW	05.04.2019
01	PRELIMINARY	IK	NW	29.03.2019

Client: WESTERN SYDNEY PARKLANDS TRUST

NETTLETONTRIBE

This drawing and design remains the property of Henry & Hymas and may not be copied in whole or in part without the prior written approval of Henry & Hymas.

Level 5,
79 Victoria Avenue
Chatswood NSW 2067

Telephone +61 2 9417 8400
Facsimile +61 2 9417 8337
Email email@hhconsult.com.au
Web www.henryandhymas.com.au

henry&hymas

Project: LIGHT HORSE INTERCHANGE BUSINESS HUB
EASTERN CREEK, NSW (SSD9667)

Title: DETAIL PLAN
SHEET 5 OF 9

Drawn	Designed	Date
M.Stimova	L.Caha	FEB 2019
Checked	Approved	Scale @A1
N.Wetzlar	A.Francis	1:500

Drawing number: 18652_SSDA_C105

Revision: 03

FOR CONTINUATION REFER TO DWG. 18652_SSDA_C103

PROPOSED STUB CONNECTION FOR LOT 1

PROPOSED STUB CONNECTION

PROPOSED SEDIMENTATION & EROSION CONTROL BASIN. VOLUME = 276m³. REFER TO SE03 FOR SIZING AND INSTRUCTIONS FOR FLOCCULATION AND DEWATERING

PROPOSED CATCH DRAIN TO SEDIMENT BASIN. MIN 0.3%

PROPOSED STUB CONNECTION

PROPOSED SEDIMENTATION & EROSION CONTROL BASIN. VOLUME = 295m³. REFER TO SE03 FOR SIZING AND INSTRUCTIONS FOR FLOCCULATION AND DEWATERING

FALL TO ROAD

15.5m WIDE ACCESS ROAD

EXISTING 6m WIDE SEWER EASEMENT

FALL TO DRAIN

1 IN 4 BATTER

PROPOSED CATCH DRAIN TO SEDIMENT BASIN. MIN 0.3%

PROPOSED STUB CONNECTION FOR LOT 6

EXISTING SEWER MANHOLE TO BE RAISED
EX.RL= 45.55
EX.IL= 41.80
EXISTING SEWER SIZE = DN600

PROPOSED CATCH DRAIN TO SEDIMENT BASIN. MIN 0.3%

2.4 x 1.2 RCBC

PROPOSED STUB CONNECTION FOR LOT 6

2 x 2.4 x 1.2 RCBC

EXISTING SEWER MANHOLE TO BE RAISED
EX.RL= 45.22
EX.IL= 41.25
EXISTING SEWER SIZE = DN600

PROPOSED SEDIMENTATION & EROSION CONTROL BASIN. VOLUME = 265m³. REFER TO SE03 FOR SIZING AND INSTRUCTIONS FOR FLOCCULATION AND DEWATERING

PROPOSED STUB CONNECTION FOR LOT 7

LOT 6
FFL 50.20
PAD 49.80

BATTER 1 IN 4 MAX. TO EXISTING

TOE OF BATTER

TOP OF BATTER

PROPOSED CATCH DRAIN TO SEDIMENT BASIN. MIN 0.3%

BATTER 1 IN 4 MAX.

PROPOSED STUB CONNECTION FOR LOT 6

2 x 2.4 x 1.2 RCBC

PROPOSED CATCH DRAIN TO SEDIMENT BASIN. MIN 0.3%

ACCESS RESERVE

4m WIDE MAINTENANCE PATH

H = 2.0m

H = 1.4m

DEEP POOL

NATURALISED EDGE, NO BUND, HIGHER FLOWS ACTIVATE SURROUNDING FLOOD PLAIN

MINOR DEPRESSION

DENOTES SUBMERGED MARSH REFER TO ECOPLANNING ECOLOGY REPORT FOR PLANTING AND TREATMENT

DEEP POOL (-1.5m)

LIMIT OF WORK

REEDY CREEK

ESKDALE CREEK

FOR CONTINUATION REFER TO DWG. 18652_SSDA_C101

FOR CONTINUATION REFER TO DWG. 18652_SSDA_C105

FOR CONTINUATION REFER TO DWG. 18652_SSDA_C107

0 10 20 30 40 50m
10 8 6 4 2
SCALE 1:500

DETAIL PLAN
SCALE: 1:500

ISSUED FOR APPROVAL

REVISION	AMENDMENT	DRAWN	DESIGNED	DATE
03	ISSUED FOR APPROVAL	MS	NW	09.04.2019
02	ISSUED FOR CO-ORDINATION	IK	NW	05.04.2019
01	PRELIMINARY	IK	NW	28.03.2019

Client: WESTERN SYDNEY PARKLANDS TRUST

NETTLETONTRIBE

This drawing and design remains the property of Henry & Hymas and may not be copied in whole or in part without the prior written approval of Henry & Hymas.

Level 5,
79 Victoria Avenue
Chatswood NSW 2067

Telephone +61 2 9417 8400
Facsimile +61 2 9417 8337
Email email@hhconsult.com.au
Web www.henryandhymas.com.au

henry&hymas

Project: LIGHT HORSE INTERCHANGE BUSINESS HUB
EASTERN CREEK, NSW (SSD9667)

Title: DETAIL PLAN
SHEET 6 OF 9

Drawn	Designed	Date
M.Stimova	L.Caha	FEB 2019
Checked	Approved	Scale @A1
N.Wetzlar	A.Francis	1:500

Drawing number: 18652_SSDA_C106

Revision: 03

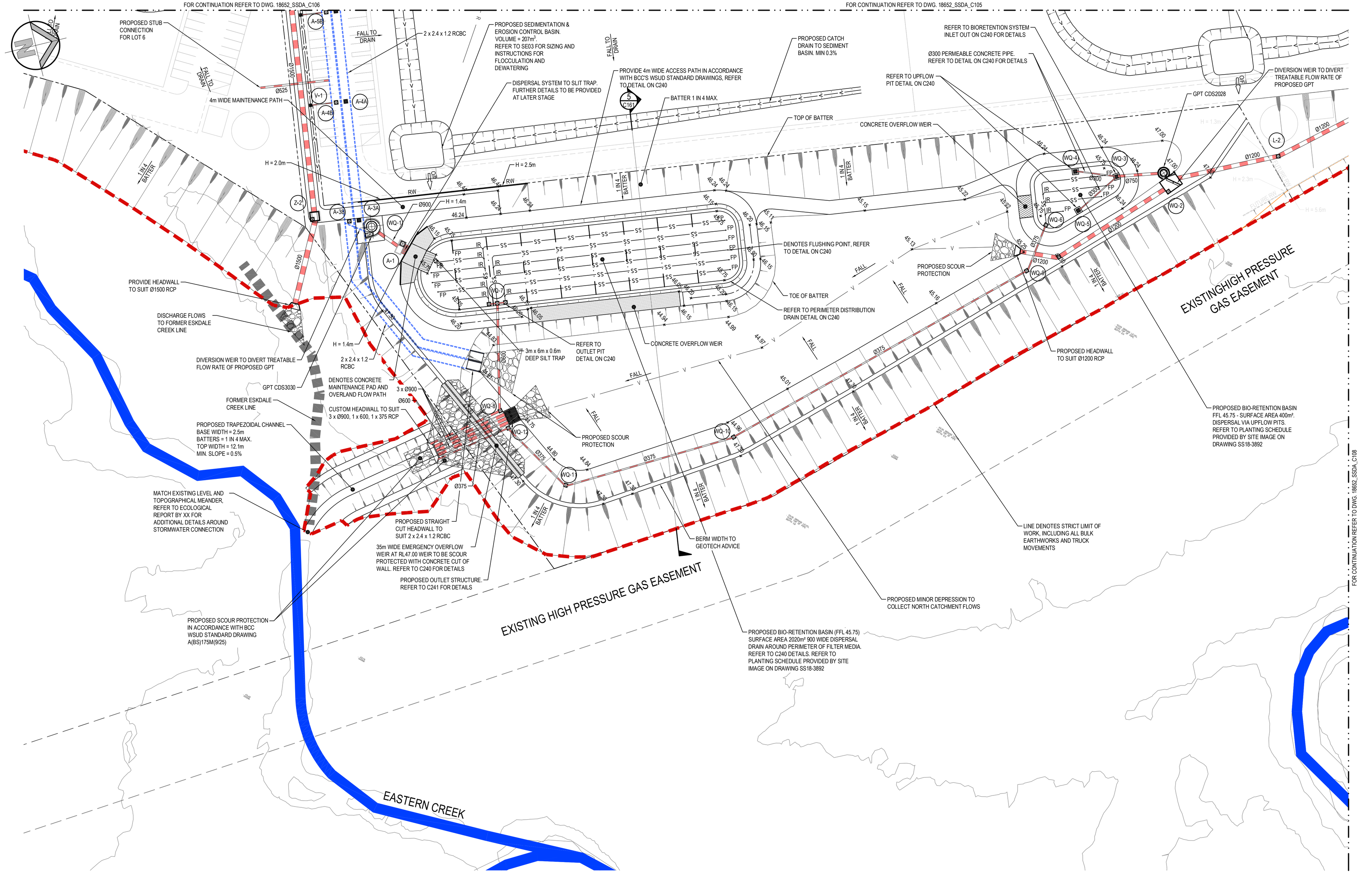

DETAIL PLAN

SCALE: 1:500

ISSUED FOR APPROVAL

REVISION	AMENDMENT	DRAWN	DESIGNED	DATE
04	ISSUED FOR APPROVAL	MS	NW	11.04.2019
03	ISSUED FOR APPROVAL	MS	NW	09.04.2019
02	ISSUED FOR CO-ORDINATION	IK	NW	05.04.2019
01	PRELIMINARY	IK	NW	29.03.2019

Client: WESTERN SYDNEY PARKLANDS TRUST

NETTLETONTRIBE

This drawing and design remains the property of Henry & Hymas and may not be copied in whole or in part without the prior written approval of Henry & Hymas.

Level 5,
79 Victoria Avenue
Chatswood NSW 2067

Telephone
+61 2 9417 8400
Facsimile
+61 2 9417 8337
Email
email@hhconsult.com.au
Web
www.henryandhymas.com.au

henry&hymas

Project: LIGHT HORSE INTERCHANGE BUSINESS HUB
EASTERN CREEK, NSW (SSD9667)

Title: DETAIL PLAN
SHEET 7 OF 9

Drawn	Designed	Date
M.Stimova	L.Caha	FEB 2019
Checked	Approved	Scale @A1
N.Wetzlar	A.Francis	1:500

Drawing number: 18652_SSDA_C107

Revision: 04

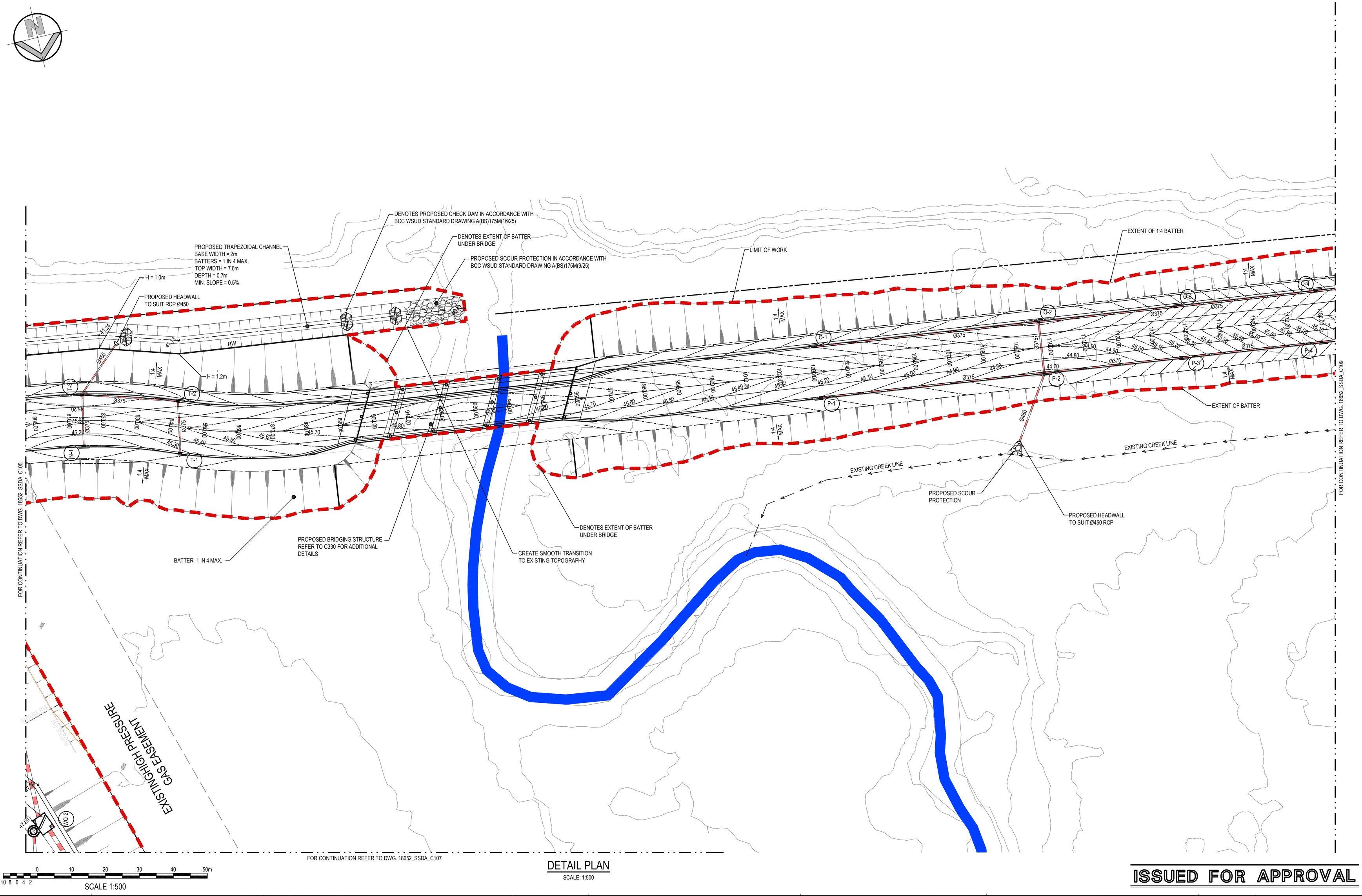

DETAIL PLAN

SCALE: 1:500

ISSUED FOR APPROVAL

REVISION	AMENDMENT	DRAWN	DESIGNED	DATE
03	ISSUED FOR APPROVAL	MS	NW	09.04.2019
02	ISSUED FOR CO-ORDINATION	IK	NW	05.04.2019
01	PRELIMINARY	IK	NW	29.03.2019

Client
WESTERN SYDNEY PARKLANDS TRUST

NETTLETONTRIBE

This drawing and design remains the property of Henry & Hymas and may not be copied in whole or in part without the prior written approval of Henry & Hymas.

Level 5,
79 Victoria Avenue
Chatswood NSW 2067

Telephone
+61 2 9417 8400
Facsimile
+61 2 9417 8337
Email
email@hhconsult.com.au
Web
www.henryandhymas.com.au

henry&hymas

Project
LIGHT HORSE INTERCHANGE BUSINESS HUB
EASTERN CREEK, NSW (SSD9667)

Title
DETAIL PLAN
SHEET 8 OF 9

Drawn	Designed	Date
M.Stimova	L.Caha	FEB 2019
Checked	Approved	Scale @A1
N.Wetzlar	A.Francis	1:500

Drawing number
18652_SSDA_C108

Revision
03

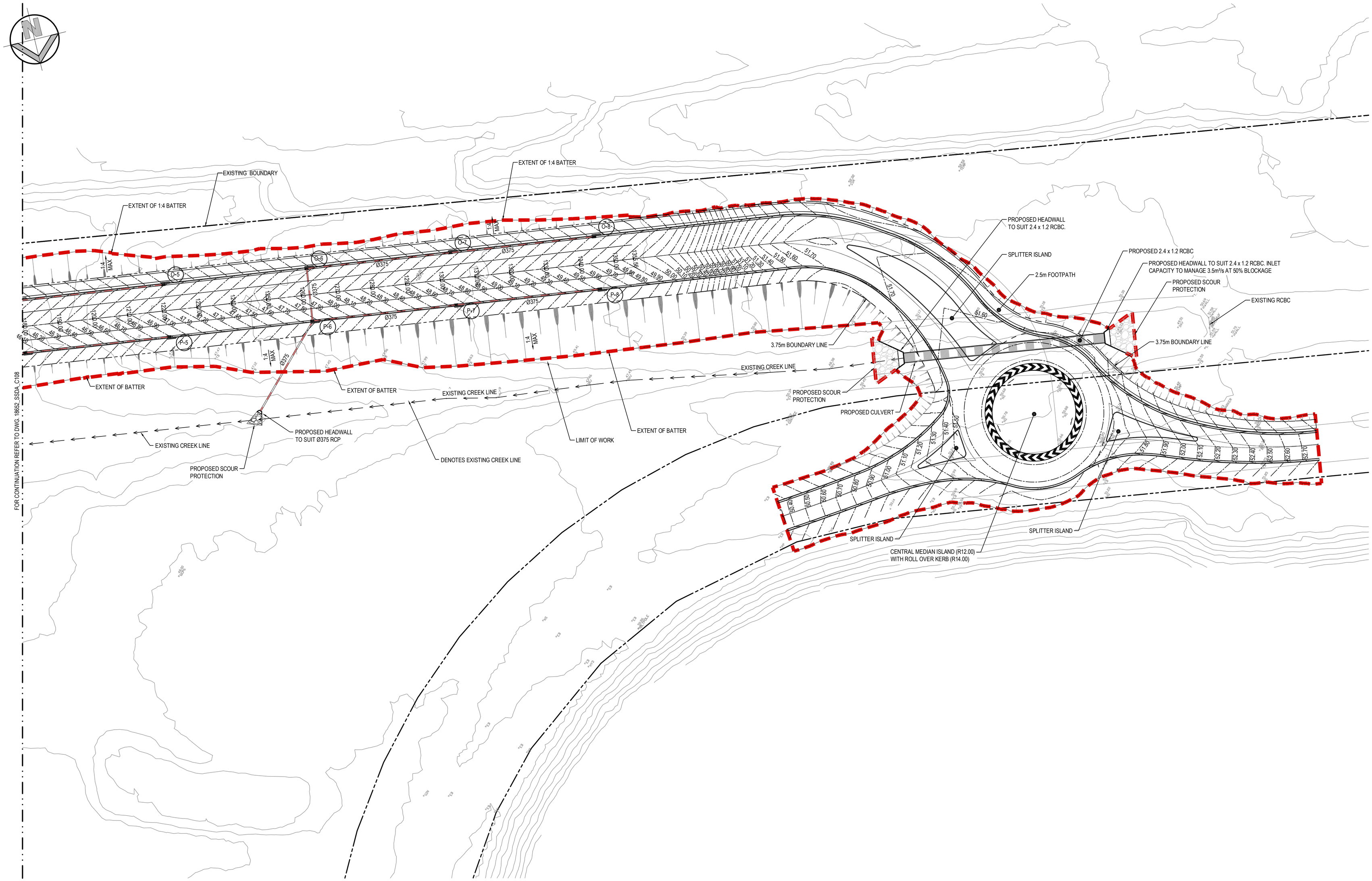

DETAIL PLAN

SCALE: 1:500

ISSUED FOR APPROVAL

REVISION	AMENDMENT	DRAWN	DESIGNED	DATE
03	ISSUED FOR APPROVAL	MS	NW	09.04.2019
02	ISSUED FOR CO-ORDINATION	IK	NW	05.04.2019
01	PRELIMINARY	IK	NW	29.03.2019

Client: WESTERN SYDNEY PARKLANDS TRUST

NETTLETONTRIBE

This drawing and design remains the property of Henry & Hymas and may not be copied in whole or in part without the prior written approval of Henry & Hymas.

Level 5,
79 Victoria Avenue
Chatswood NSW 2067

Telephone +61 2 9417 8400
Facsimile +61 2 9417 8337
Email email@hhconsult.com.au
Web www.henryandhymas.com.au

henry&hymas

Project: LIGHT HORSE INTERCHANGE BUSINESS HUB
EASTERN CREEK, NSW (SSD9667)

Title: DETAIL PLAN
SHEET 9 OF 9

Drawn	Designed	Date
M.Stimova	L.Caha	FEB 2019
Checked	Approved	Scale @A1
N.Wetzlar	A.Francis	1:500

Drawing number: 18652_SSDA_C109

Revision: 03

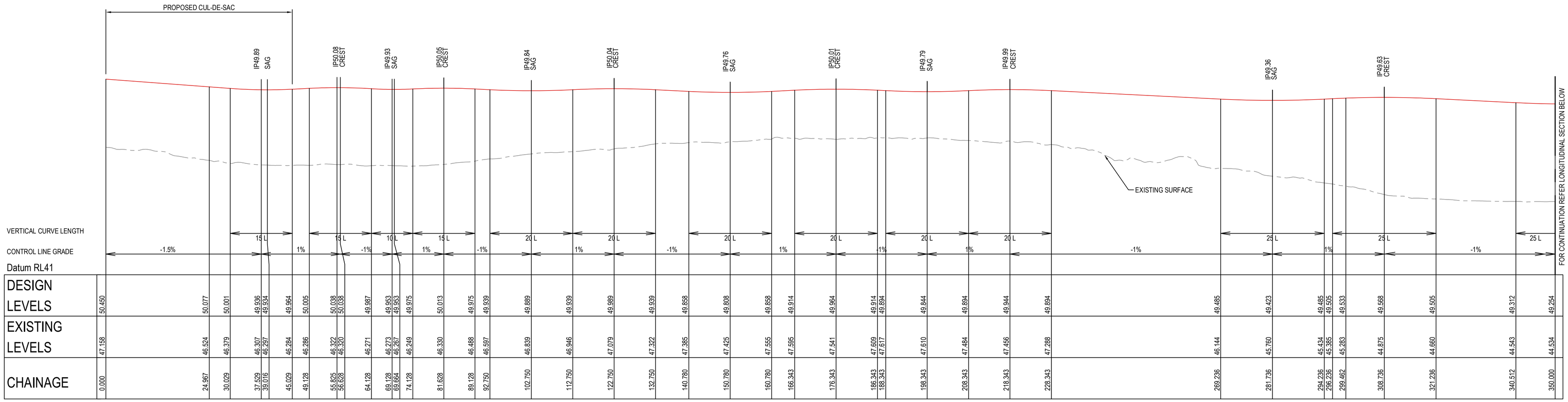

LONGITUDINAL SECTION ROAD 1

HORIZONTAL SCALE 1:500
VERTICAL SCALE 1:100

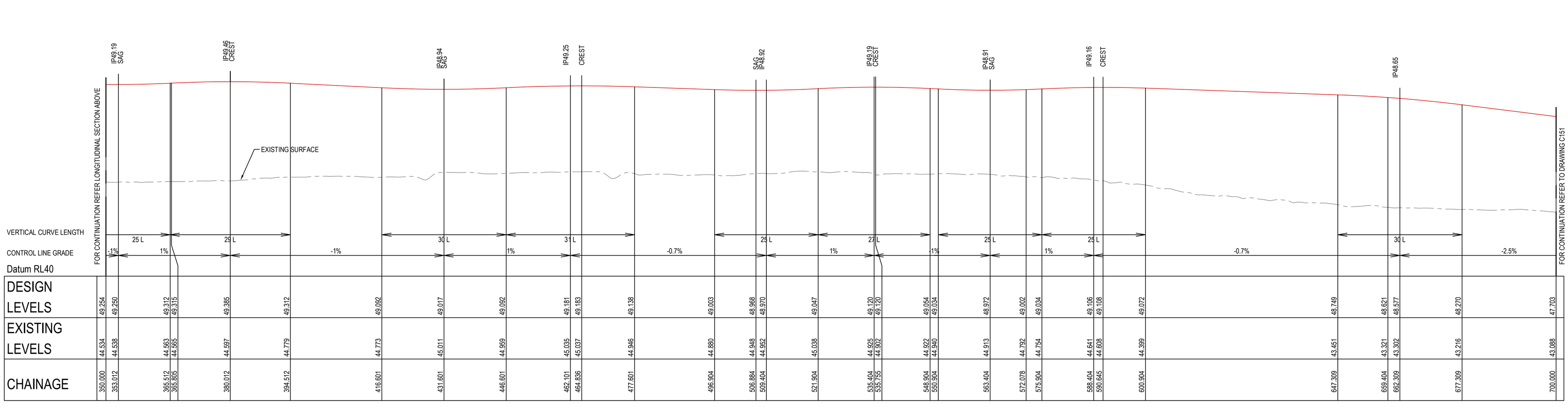

LONGITUDINAL SECTION ROAD 1 - CONTINUATION

HORIZONTAL SCALE 1:500
VERTICAL SCALE 1:100

0 10 20 30 40 50m
10 8 6 4 2
SCALE 1:500

0 2 4 6 8 10m
2 1
SCALE 1:100

ISSUED FOR APPROVAL

REVISION	AMENDMENT	DRAWN	DESIGNED	DATE
03	ISSUED FOR APPROVAL	MS	NW	09.04.2019
02	ISSUED FOR CO-ORDINATION	IK	NW	05.04.2019
01	PRELIMINARY	IK	NW	29.03.2019

Client: WESTERN SYDNEY PARKLAND TRUST

Architect: NETTLETONTRIBE

This drawing and design remains the property of Henry & Hymas and may not be copied in whole or in part without the prior written approval of Henry & Hymas.

Level 5,
79 Victoria Avenue
Chatswood NSW 2067

Telephone +61 2 9417 8400
Facsimile +61 2 9417 8337
Email email@hhconsult.com.au
Web www.henryandhymas.com.au

henry&hymas

Project: LIGHT HORSE INTERCHANGE BUSINESS HUB
EASTERN CREEK, NSW (SSD9667)

Title: ROAD 1 LONGITUDINAL SECTION
SHEET 1 OF 2

Drawn	Designed	Date
M.Stimova	L.Caha	FEB 2019
Checked	Approved	Scale
N.Wetzlar	A.Francis	AS SHOWN @ A1

Drawing number: 18652_SSDA_C150
Revision: 03

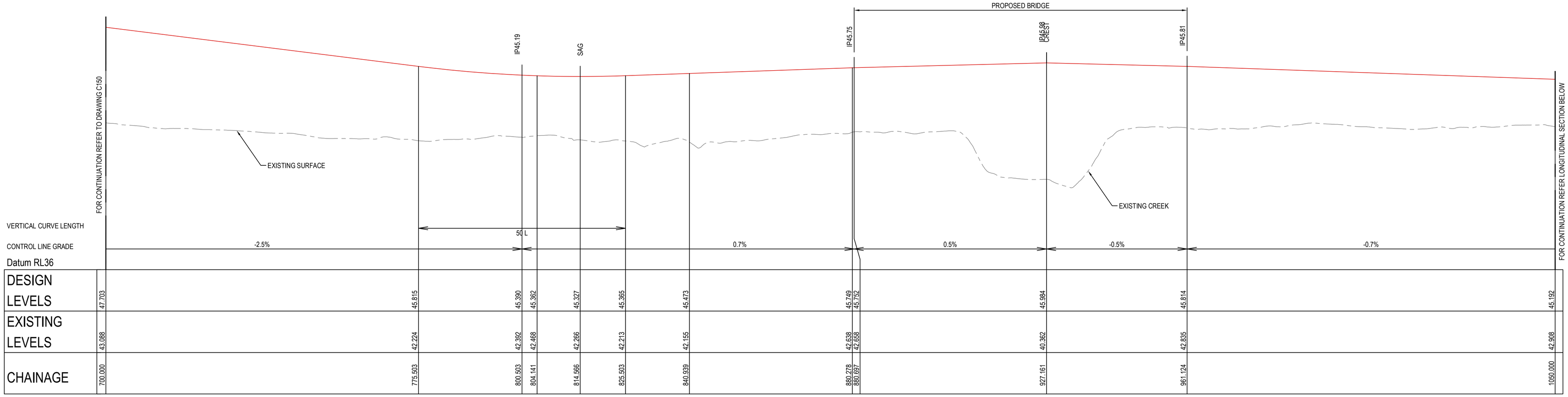

LONGITUDINAL SECTION ROAD 1 - CONTINUATION

HORIZONTAL SCALE 1:500
VERTICAL SCALE 1:100

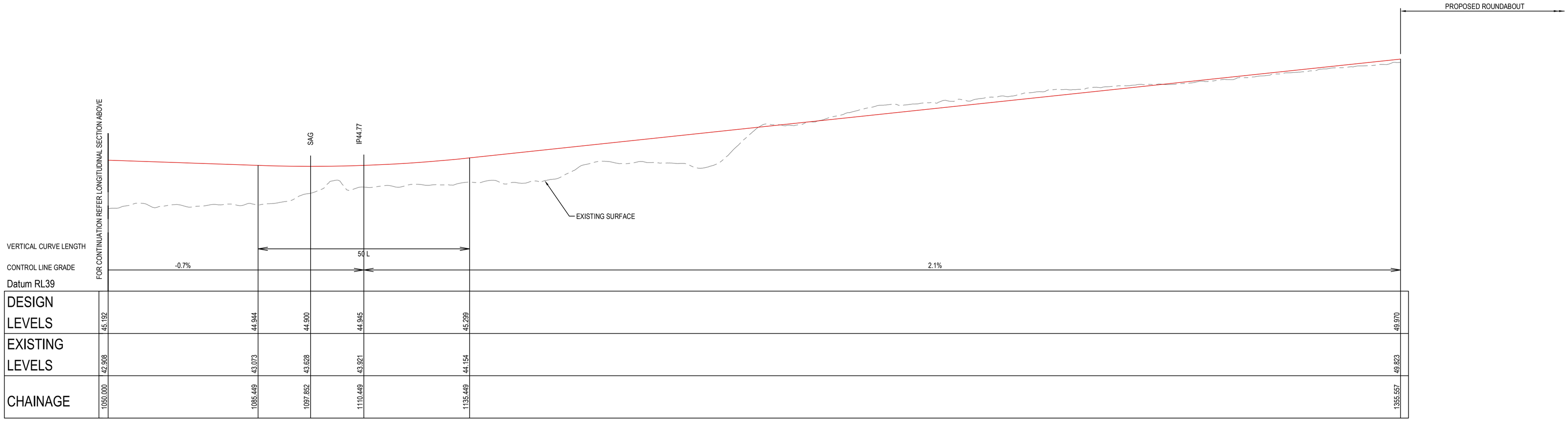

LONGITUDINAL SECTION ROAD 1 - CONTINUATION

HORIZONTAL SCALE 1:500
VERTICAL SCALE 1:100

0 10 20 30 40 50m
10 8 6 4 2
SCALE 1:500

0 2 4 6 8 10m
2 1
SCALE 1:100

ISSUED FOR APPROVAL

REVISION	AMENDMENT	DRAWN	DESIGNED	DATE
03	ISSUED FOR APPROVAL	MS	NW	09.04.2019
02	ISSUED FOR CO-ORDINATION	IK	NW	05.04.2019
01	PRELIMINARY	IK	NW	29.03.2019

Client: WESTERN SYDNEY PARKLAND TRUST

Architect: NETTLETONTRIBE

This drawing and design remains the property of Henry & Hymas and may not be copied in whole or in part without the prior written approval of Henry & Hymas.

Level 5,
79 Victoria Avenue
Chatswood NSW 2067

Telephone
+61 2 9417 8400
Facsimile
+61 2 9417 8337
Email
email@hhconsult.com.au
Web
www.henryandhymas.com.au

henry&hymas

Project: LIGHT HORSE INTERCHANGE BUSINESS HUB
EASTERN CREEK, NSW (SSD9667)

Title: ROAD 1 LONGITUDINAL SECTION
SHEET 2 OF 2

Drawn	Designed	Date
M.Stimova	L.Caha	FEB 2019
Checked	Approved	Scale
N.Wetzlar	A.Francis	AS SHOWN @ A1

Drawing number: 18652_SSDA_C151
Revision: 03

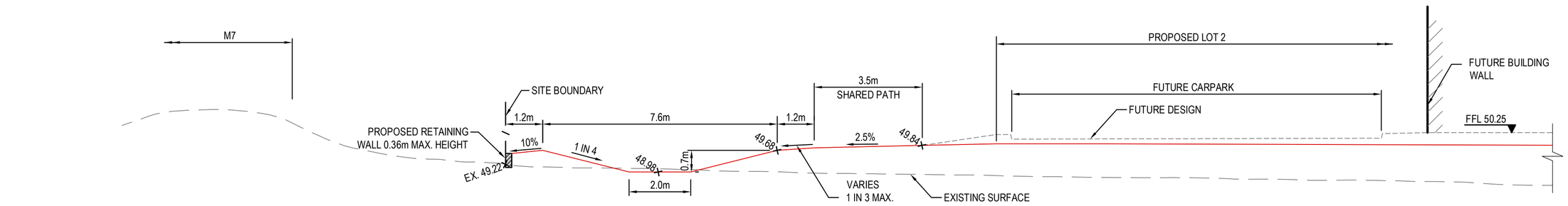

SECTION 1 / C104
SCALE: 1:100 @ A1

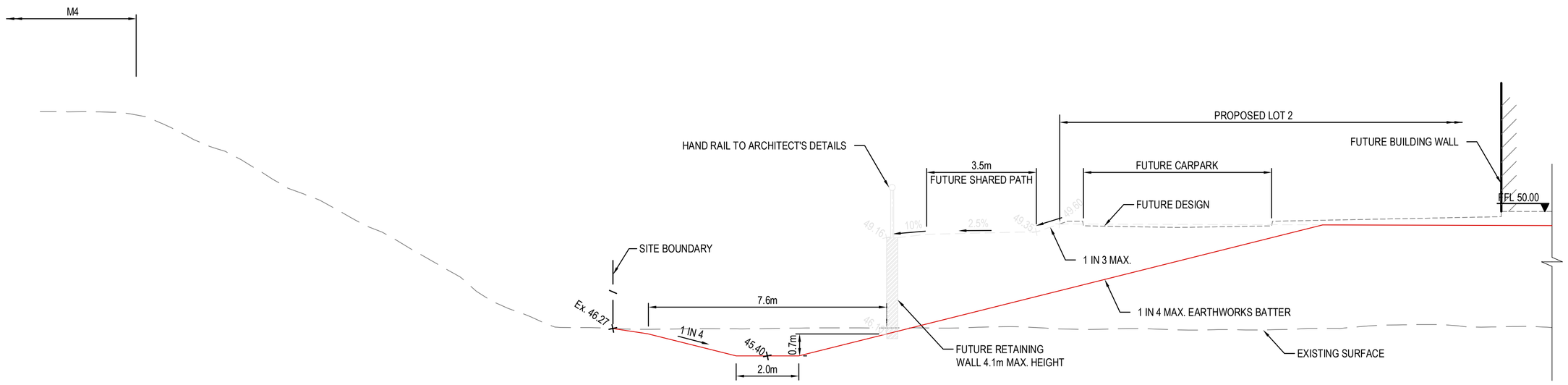

SECTION 2 / C104
SCALE: 1:100 @ A1

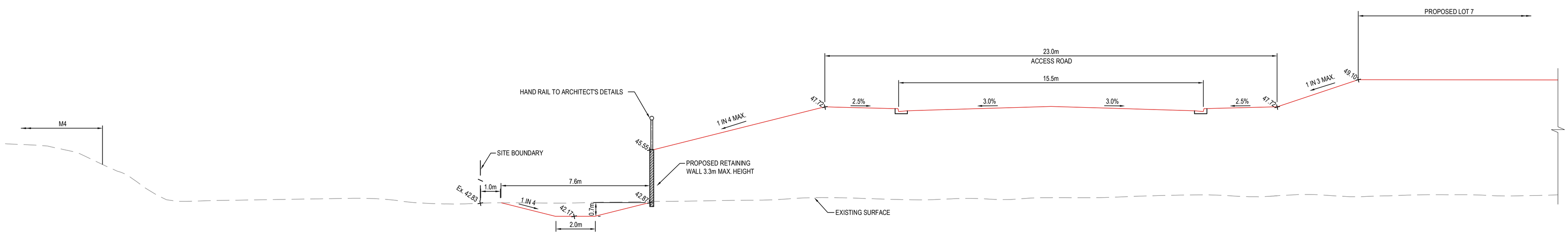

SECTION 3 / C105
SCALE: 1:100 @ A1

0 2 4 6 8 10m
2 1
SCALE 1:100

ISSUED FOR APPROVAL

REVISION	AMENDMENT	DRAWN	DESIGNED	DATE
03	ISSUED FOR APPROVAL	MS	NW	09.04.2019
02	ISSUED FOR CO-ORDINATION	IK	NW	05.04.2019
01	PRELIMINARY	IK	NW	29.03.2019

Client
WESTERN SYDNEY PARKLANDS TRUST

NETTLETONTRIBE

This drawing and design remains the property of Henry & Hymas and may not be copied in whole or in part without the prior written approval of Henry & Hymas.

Level 5,
79 Victoria Avenue
Chatswood NSW 2067

Telephone +61 2 9417 8400
Facsimile +61 2 9417 8337
Email email@hhconsult.com.au
Web www.henryandhymas.com.au

henry&hymas

Project
LIGHT HORSE INTERCHANGE BUSINESS HUB
EASTERN CREEK, NSW (SSD9667)

Title
SITE SECTIONS
SHEET 1 OF 2

Drawn	Designed	Date
M.Stimova	L.Caha	FEB 2019
Checked	Approved	Scale @A1
N.Wetzlar	A.Francis	1:100

Drawing number
18652_SSDA_C160

Revision
03

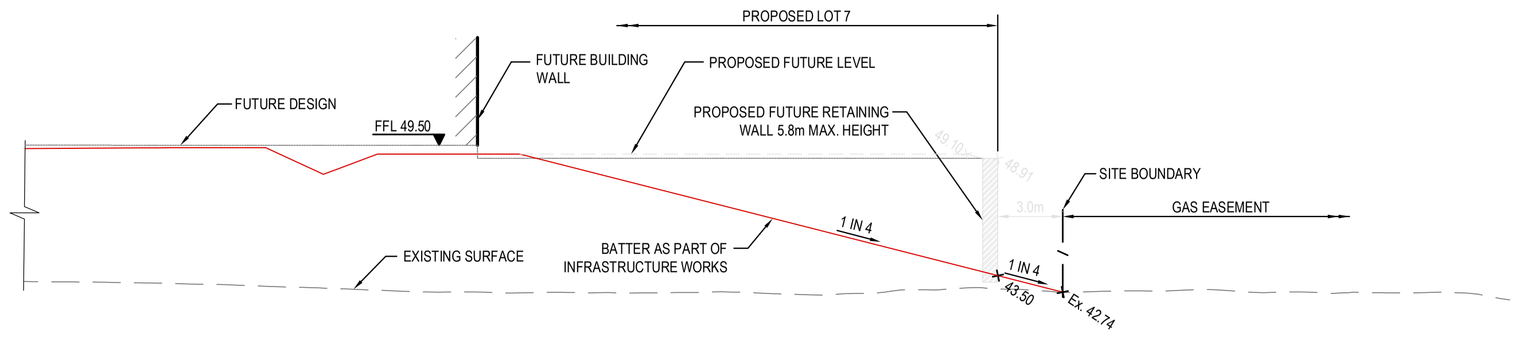

SECTION 4 (C105)
SCALE: 1:200 @ A1

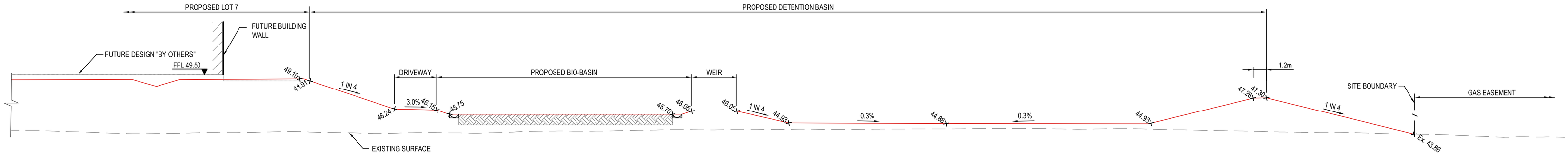

SECTION 5 (C107)
SCALE: 1:200 @ A1

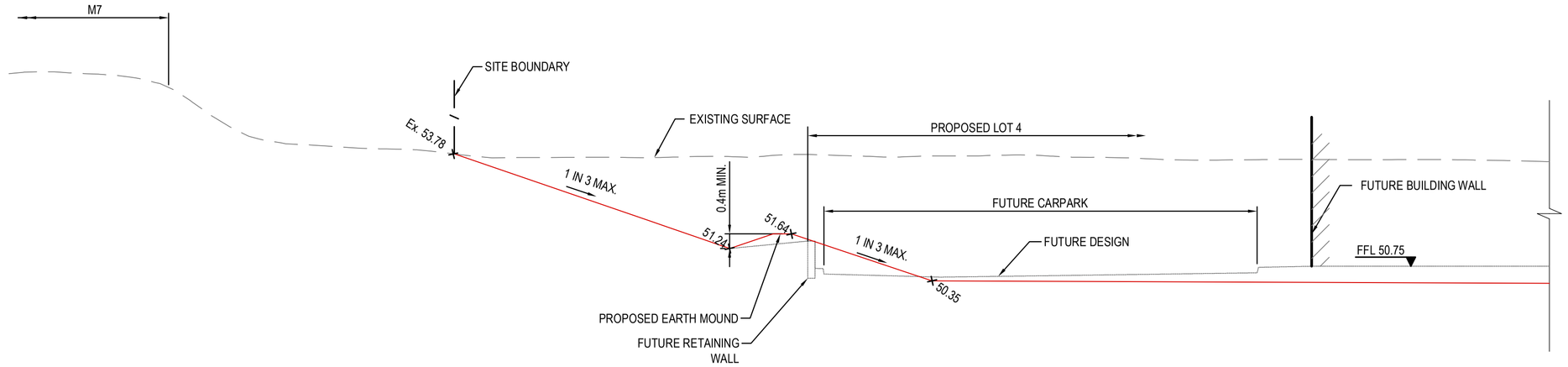

SECTION 6 (C103)
SCALE: 1:100 @ A1

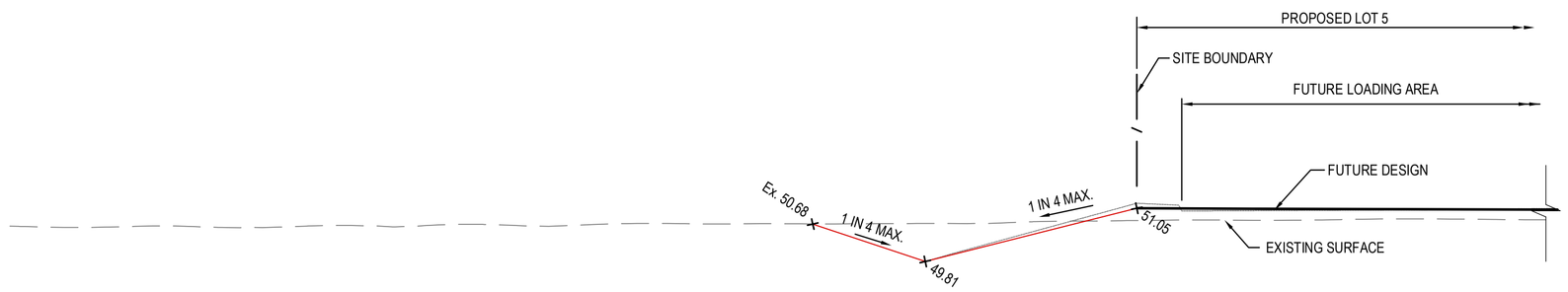

SECTION 7 (C102)
SCALE: 1:100 @ A1

0 2 4 6 8 10m
2 1
SCALE 1:100

ISSUED FOR APPROVAL

REVISION	AMENDMENT	DRAWN	DESIGNED	DATE
03	ISSUED FOR APPROVAL	MS	NW	09.04.2019
02	ISSUED FOR CO-ORDINATION	IK	NW	05.04.2019
01	PRELIMINARY	IK	NW	29.03.2019

Client: WESTERN SYDNEY PARKLANDS TRUST

NETTLETONTRIBE

This drawing and design remains the property of Henry & Hymas and may not be copied in whole or in part without the prior written approval of Henry & Hymas.

Level 5,
79 Victoria Avenue
Chatswood NSW 2067

Telephone +61 2 9417 8400
Facsimile +61 2 9417 8337
Email email@hhconsult.com.au
Web www.henryandhymas.com.au

henry&hymas

Project: LIGHT HORSE INTERCHANGE BUSINESS HUB
EASTERN CREEK, NSW (SSD9667)

Title: SITE SECTIONS
SHEET 2 OF 2

Drawn	Designed	Date
M.Stimova	L.Caha	FEB 2019
Checked	Approved	Scale @A1
N.Wetzlar	A.Francis	1:100

Drawing number: 18652_SSDA_C161
Revision: 03

TYPICAL PIT CHAMBER SIZES

IT IS THE CONTRACTORS RESPONSIBILITY TO SELECT PIT CHAMBER SIZE WITH REGARDS TO PIPE SIZE, DEPTH TO INVERT AND SKEW ANGLE. REFER SKETCHES BELOW.

1. SELECT PIT CHAMBER USING THE STEPS BELOW:
2. SELECT PIT CHAMBER SIZE DEPENDING ON THE PIPE DIAMETERS.
3. CHECK PIT CHAMBER SIZE TO SATISFY DEPTH TO INVERT REQUIREMENTS.
   CHECK PIT CHAMBER DIMENSIONS TO SATISFY THE SKEW ANGLE IN THE TABLE.

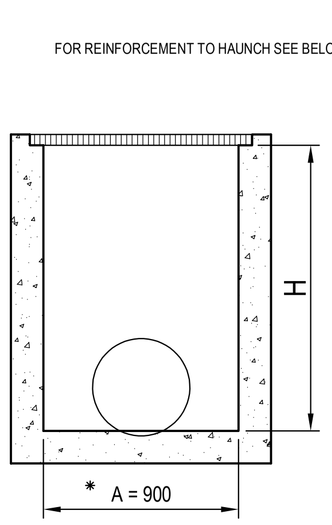

SECTION
NTS

*A = 600 FOR PIPES UP TO 375 DIA.

1 PIT CHAMBER DIMENSIONS FOR PIPES UP TO 600 DIA.

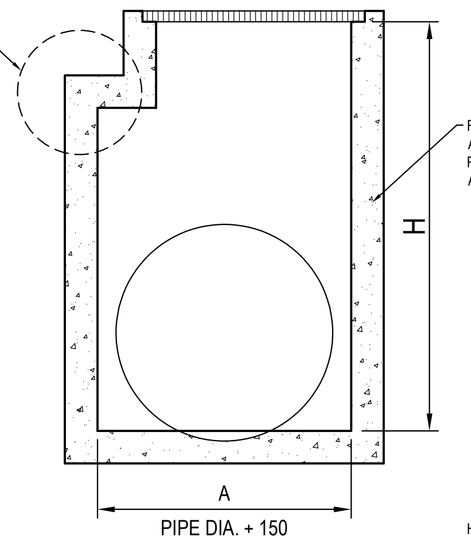

SECTION
NTS

1 PIT CHAMBER FOR PIPES GREATER THAN 600 DIA.

FOR B = 600mm - MAX. SIDE ENTRY PIPE AT 45° SKEW = 225mm
FOR B = 900mm - MAX. SIDE ENTRY PIPE AT 45° SKEW = 375mm
FOR B = 1200mm - MAX. SIDE ENTRY PIPE AT 45° SKEW = 600mm
FOR B = 1500mm - MAX. SIDE ENTRY PIPE AT 45° SKEW = 825mm
FOR B = 1900mm - MAX. SIDE ENTRY PIPE AT 45° SKEW = 1050mm

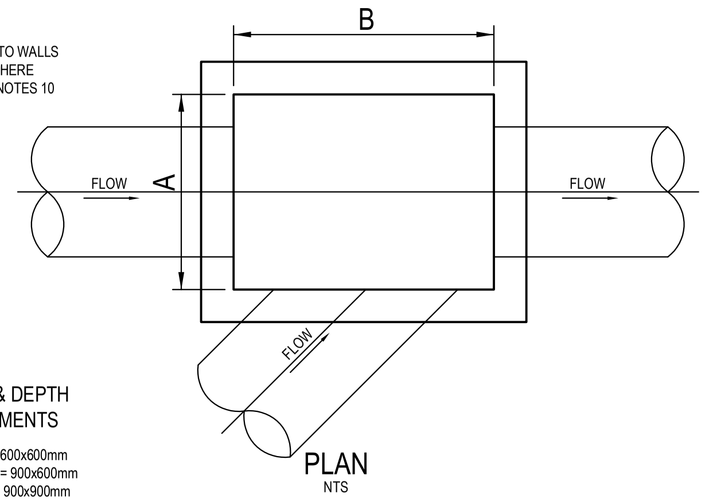

PLAN
NTS

3 PIT CHAMBER FOR SIDE ENTRY ON SKEW

2 PIT SIZE & DEPTH REQUIREMENTS

H = 0-900mm - AxB = 600x600mm
H = 900-1200mm - AxB = 900x600mm
H = >1200mm - AxB = 900x900mm

TABLE 1	
SIEVE SIZE (MM)	WEIGHT PASISNG (%)
75.0	100
9.5	100 TO 50
2.36	100 TO 30
0.60	50 TO 15
0.075	25 TO 0

TABLE 2	
SIEVE SIZE (MM)	WEIGHT PASISNG (%)
19.0	100
2.36	100 TO 50
0.60	90 TO 20
0.30	60 TO 10
0.15	25 TO 0
0.075	10 TO 0

TABLE 3				
SUPPORT TYPE	BED ZONE X	HAUNCH ZONE Y	BED AND HAUNCH ZONES COMPACTION	MAX BEDDING FACTOR
HS1	100 IF D<=1500, OR 150 IF D>=1500	0.1D	50	2.0
HS2		0.3D	60	2.5
HS3		0.3D	70	4.0

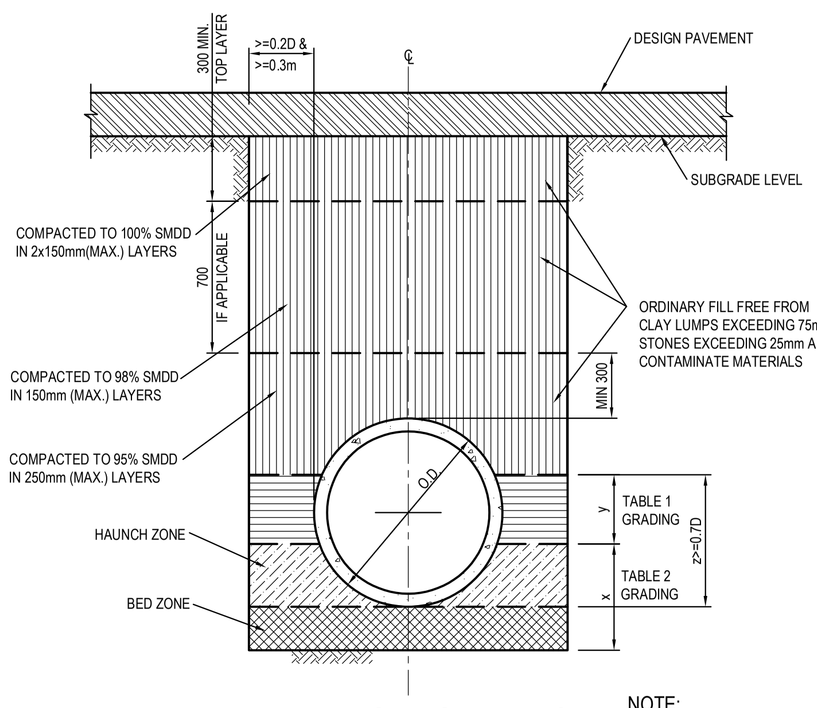

PIPE TRENCH INSTALLATION BENEATH PAVEMENT

(HS SUPPORT TO BE USED UNDER ROADWAY)
SCALE 1:20

NOTE:
TYPE HS2 TO BE USED AS A TYPICAL SUPPORT FOR TRENCHES UNDER ROADWAY UNLESS SPECIFIED SEPERATELY

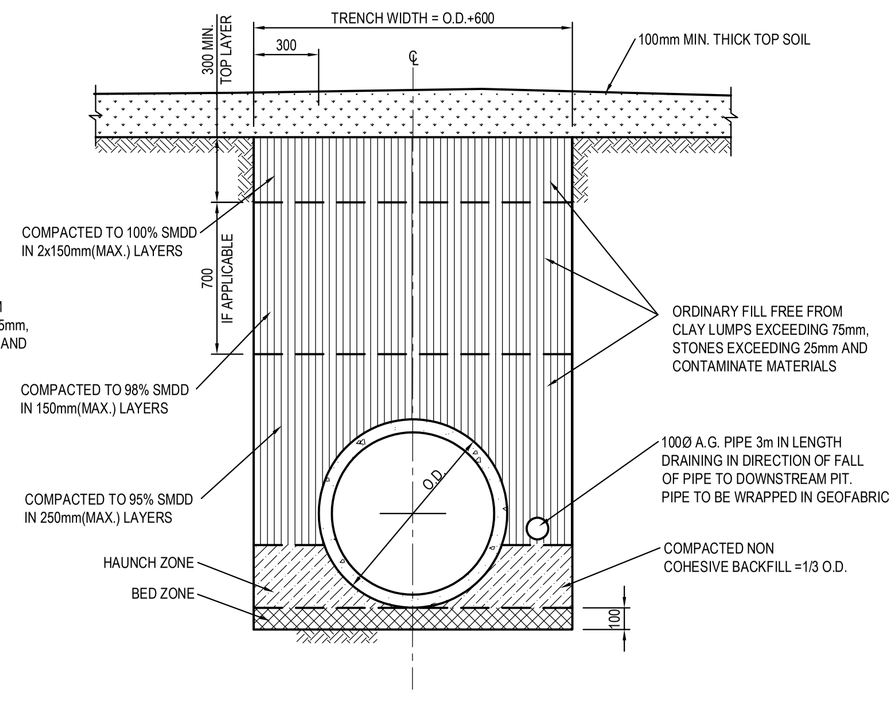

PIPE TRENCH INSTALLATION IN LANDSCAPE AREAS

(H1 & H2 SUPPORT)
SCALE 1:20

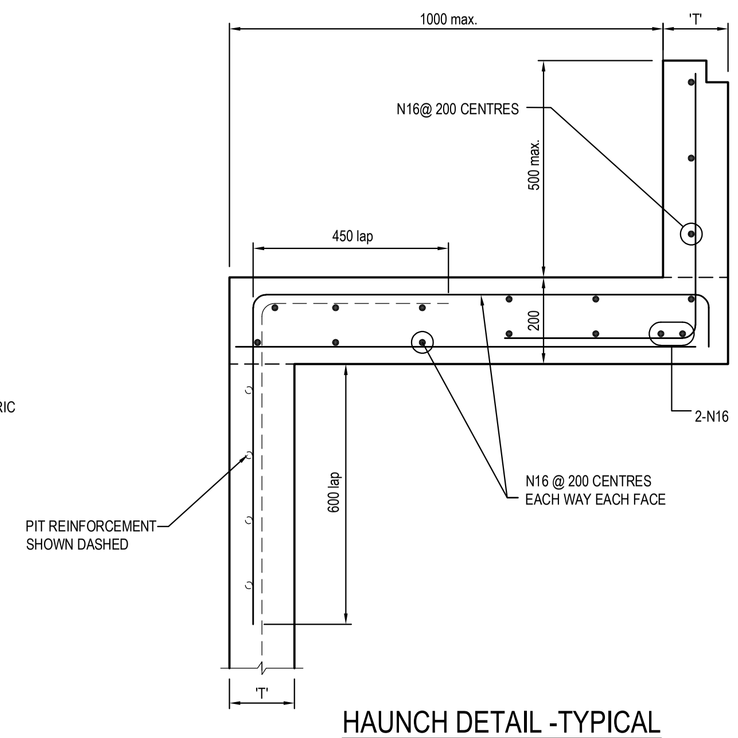

HAUNCH DETAIL -TYPICAL

SCALE 1:10

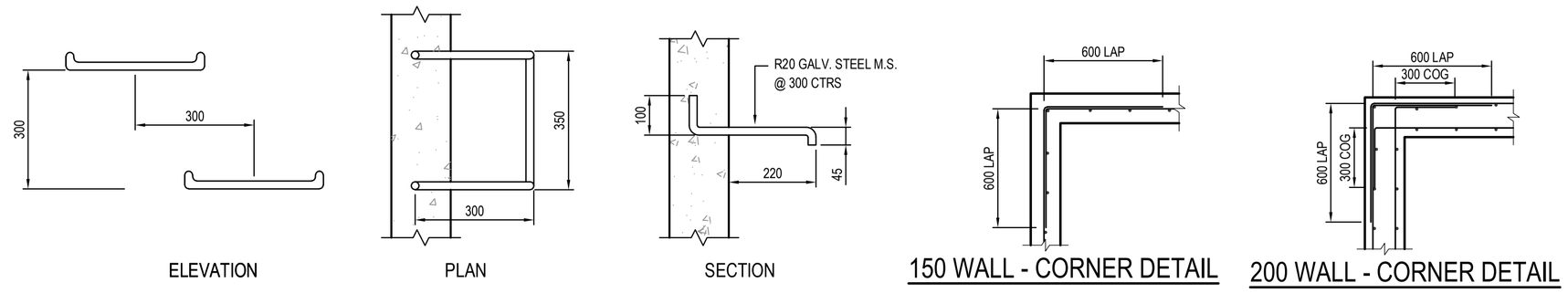

TYPICAL STEP IRON DETAIL

SCALE 1:10

PIT LID SCHEDULE

PIT/STRUCTURE NUMBER	LID DESCRIPTION
S-2, P-1, P-3, P-4, P-5, P-6, P-7, P-8, O-1, O-3, S-1, O-4, O-5, O-6, O-7, O-8, T-1, T-2, M-1, M-2	ON GRADE KERB INLET PIT WITH 1.8m LINTEL AND HEAVY DUTY GRATED LID CLASS "D" IN ACCORDANCE WITH BLACKTOWN CITY COUNCIL REQUIREMENTS. PIT TO BE FITTED WITH PIT BASKET " 200 MICRON - ENVIROPOD"
P-2, O-2, T-3, N-1	SAG KERB INLET PIT WITH 1.8m LINTEL AND HEAVY DUTY GRATED LID CLASS "D" IN ACCORDANCE WITH BLACKTOWN CITY COUNCIL REQUIREMENTS. PIT TO BE FITTED WITH PIT BASKET "' 200 MICRON - ENVIROPOD"
L-10, L-11, L-14, C-2, B-1, A-10A, A-11A, I-1, R-1, X-1, L-14, R-2	ON GRADE KERB INLET PIT WITH 1.8m LINTEL AND HEAVY DUTY GRATED LID CLASS "D" IN ACCORDANCE WITH BLACKTOWN CITY COUNCIL REQUIREMENTS.
L-12, U-1, L-13, Q-1, C-3, C-4, C-1, K-1, J-1, A-9A, E-2, A-12, H-1, A-13, G-1, A-14, F-1, A-15, E-1, A-16	SAG KERB INLET PIT WITH 1.8m LINTEL AND HEAVY DUTY GRATED LID CLASS "D" IN ACCORDANCE WITH BLACKTOWN CITY COUNCIL REQUIREMENTS.
Z-2, Z-4, Z-5, Z-6, Z-10, A-3B, A-4B, A-10B, A-11B, A-1, A-12B, A-5B, A-6B, A-7B, A-8B, A-9B	SEALED JUNCTION PIT WITH 900 X 900 HINGED HEAVY DUTY CLASS "D"" CONCRETE LID IN ACCORDANCE WITH BLACKTOWN CITY COUNCIL REQUIREMENTS.
WQ-9, WQ-10, WQ-11, WQ-12, WQ-8, M-3	SEALED JUNCTION PIT WITH 900 X 900 HINGED LIGHT DUTY CLASS "B"" CONCRETE LID IN ACCORDANCE WITH BLACKTOWN CITY COUNCIL REQUIREMENTS.
A-3A, A-4A, A-5A, A-6A, A-7A, A-8A, L-7, L-8, L-9	SURFACE INLET PIT WITH 900 X 900 HINGED HEAVY DUTY CLASS "D"" GRATED ACCESS LID IN ACCORDANCE WITH BLACKTOWN CITY COUNCIL REQUIREMENTS.
WQ-3, WQ-4, WQ-5, WQ-6, WQ-7	WATER QUALITY PITS, REFER TO C240 FOR ADDITIONAL DETAILS
WQ-1	STORMWATER QUALITY IMPROVEMENT DEVICE: GPT UNIT - ROCLA CDS 3030
WQ-2	STORMWATER QUALITY IMPROVEMENT DEVICE: GPT UNIT - ROCLA CDS 2028
Z-12	SURFACE INLET PIT WITH 900x900 LIGHT DUTY SURCHARGE STYLE GRATE IN ACCORDANCE WITH BLACKTOWN CITY COUNCIL REQUIREMENTS.
Z-3, Z-7, Z-8, Z-9	SEALED SADDLE PIT WITH 900 X 900 HINGED HEAVY DUTY CLASS "D"" CONCRETE LID. PIT RISERS TO BE CONNECTED TO Ø1500 STORMWATER LINE. PIT TO BE FINISHED IN ACCORDANCE WITH BLACKTOWN CITY COUNCIL REQUIREMENTS.
WQ-13	SURFACE INLET PIT WITH 900 X 900 HINGED LIGHT DUTY CLASS "B"" SURCHARGE STYLE LID IN ACCORDANCE WITH BLACKTOWN CITY COUNCIL REQUIREMENTS.
L-5, L-6, L-3, L-4	SURFACE INLET PIT TO BE FINISHED AT BULK EARTHWORKS LEVEL. PITS TO BE RAISED AND FINISHED UNDER LOT 7 WORKS. PIT TO BE FINISHED WITH 900 X 900 HEAVY DUTY CLASS "D" LID
V-1, V-2, V-3, V-4, V-5	SURFACE INLET PIT WITH 450 X450 HEAVY DUTY "CLASS D" GRADED LID IN ACCORDANCE WITH BLACKTOWN CITY COUNCIL REQUIREMENTS.

IMPORTANT NOTES:

1. FOR SPECIFICATION OF PIT LIDS WITHIN OSD AND BIO-RETENTION BASINS, REFER TO DRAWING C101-C109 & C240-C241
2. ALL PIT LIDS TO BE CONSTRUCTED IN ACCORDANCE WITH BLACKTOWN CITY COUNCIL REQUIREMENTS AND WSUD STANDARD DRAWINGS.

ISSUED FOR APPROVAL

REVISION	AMENDMENT	DRAWN	DESIGNED	DATE
03	ISSUED FOR APPROVAL	MS	NW	09.04.2019
02	ISSUED FOR CO-ORDINATION	IK	NW	05.04.2019
01	PRELIMINARY	IK	NW	29.03.2019

Client: WESTERN SYDNEY PARKLANDS TRUST

NETTLETONTRIBE

This drawing and design remains the property of Henry & Hymas and may not be copied in whole or in part without the prior written approval of Henry & Hymas.

Level 5,
79 Victoria Avenue
Chatswood NSW 2067

Telephone +61 2 9417 8400
Facsimile +61 2 9417 8337
Email email@hhconsult.com.au
Web www.henryandhymas.com.au

henry&hymas

Project: LIGHT HORSE INTERCHANGE BUSINESS HUB
EASTERN CREEK, NSW (SSD9667)

Title: STORMWATER MISCELLANEOUS DETAILS & PIT LID SCHEDULE

Drawn	Designed	Date
M.Stimova	L.Caha	FEB 2019
Checked	Approved	Scale @A1
N.Wetzlar	A.Francis	NTS

Drawing number: 18652_SSDA_C200

Revision: 03

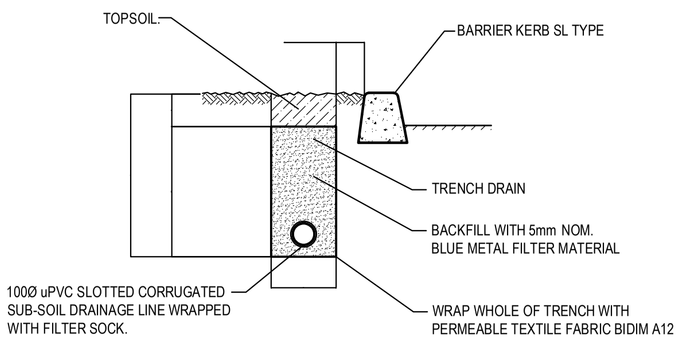

SUB-SOIL DRAIN DETAIL

SCALE : 1:20

NOTE

UNLESS SPECIFICALLY NOTED SUBSOIL DRAIN TO BE PROVIDED AROUND ALL KERB WITH SURFACE GRADING TOWARDS THE ROAD

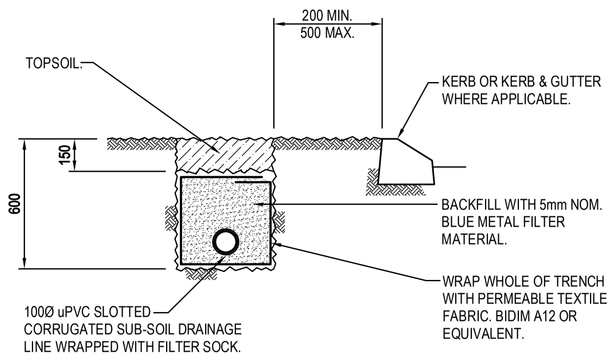

SUB-SOIL DRAIN DETAIL

SCALE 1:20

NOTE

UNLESS SPECIFICALLY NOTED SUBSOIL DRAIN TO BE PROVIDED AROUND ALL KERB WITH SURFACE GRADING TOWARDS THE ROAD

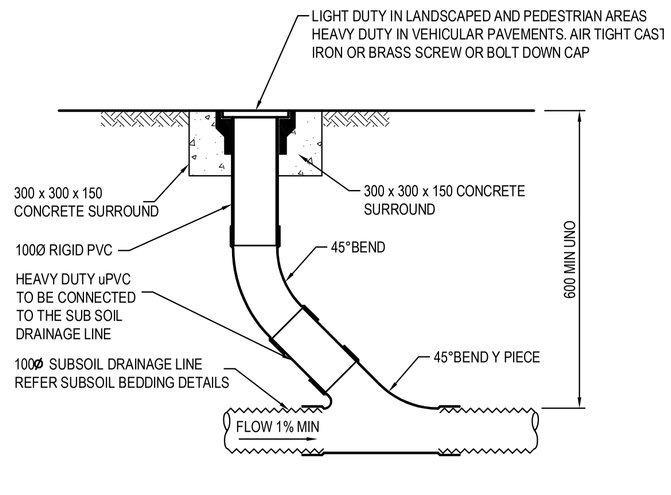

INTERMEDIATE RISER (IR)

SCALE 1:10

NOTE: SLOTTED RIGID PVC PIPE AND FITTINGS MAY BE USED

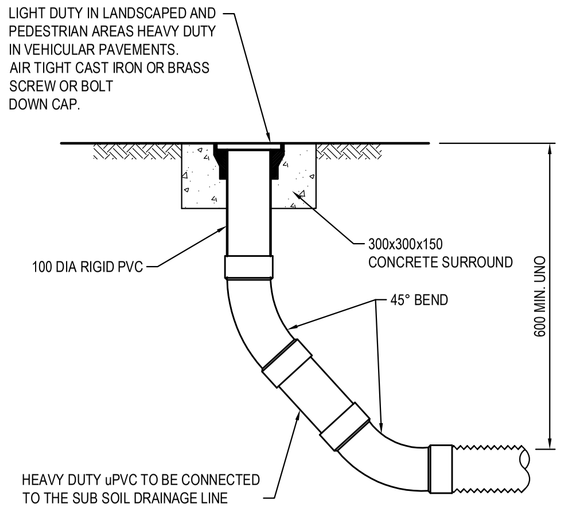

FLUSHING POINT (FP)

SCALE 1:10

NOTE: SLOTTED RIGID PVC PIPE AND FITTINGS MAY BE USED

ISSUED FOR APPROVAL

REVISION	AMENDMENT	DRAWN	DESIGNED	DATE	REVISION	AMENDMENT	DRAWN	DESIGNED	DATE
03	ISSUED FOR APPROVAL	MS	NW	09.04.2019					
02	ISSUED FOR CO-ORDINATION	IK	NW	05.04.2019					
01	PRELIMINARY	IK	NW	29.03.2019					

Client: WESTERN SYDNEY PARKLANDS TRUST

NETTLETONTRIBE

This drawing and design remains the property of Henry & Hymas and may not be copied in whole or in part without the prior written approval of Henry & Hymas.

Level 5,
79 Victoria Avenue
Chatswood NSW 2067

Telephone +61 2 9417 8400
Facsimile +61 2 9417 8337
Email email@hhconsult.com.au
Web www.henryandhymas.com.au

henry&hymas

Project: LIGHT HORSE INTERCHANGE BUSINESS HUB
EASTERN CREEK, NSW (SSD9667)

Title: STORMWATER MISCELLANEOUS DETAILS

Drawn	Designed	Date
M.Stimova	L.Caha	FEB 2019
Checked	Approved	Scale @A1
N.Wetzlar	A.Francis	NTS

Drawing number: 18652_SSDA_C201

Revision: 03

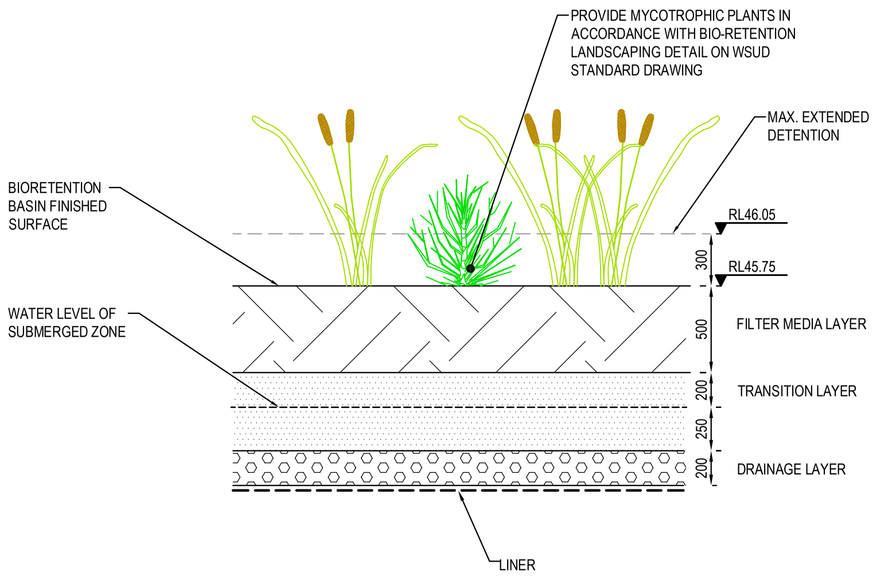

BIO-RETENTION FILTER PROFILE

SCALE 1:25

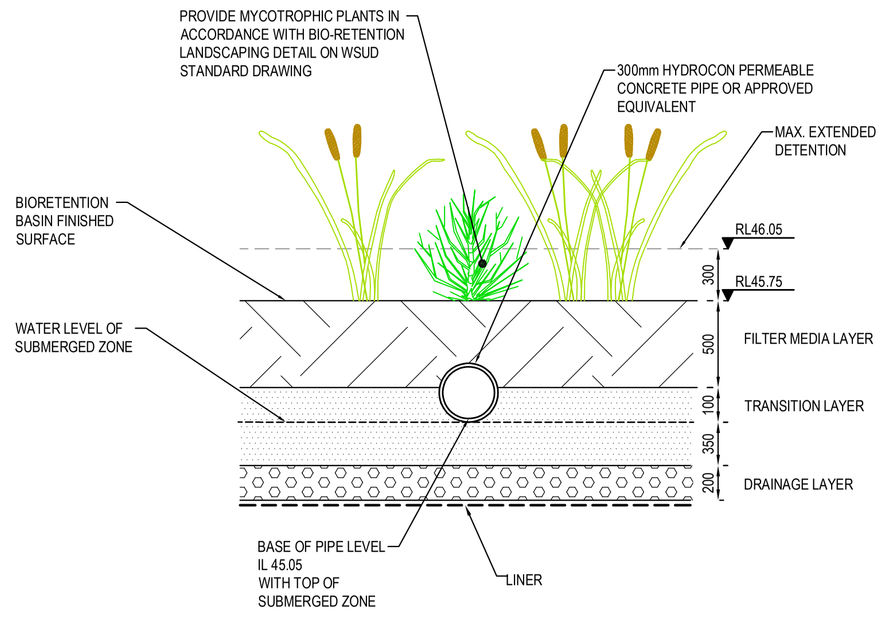

BIO-RETENTION FILTER PROFILE INCUDING PERMEABLE CONCRETE PIPE

SCALE 1:25

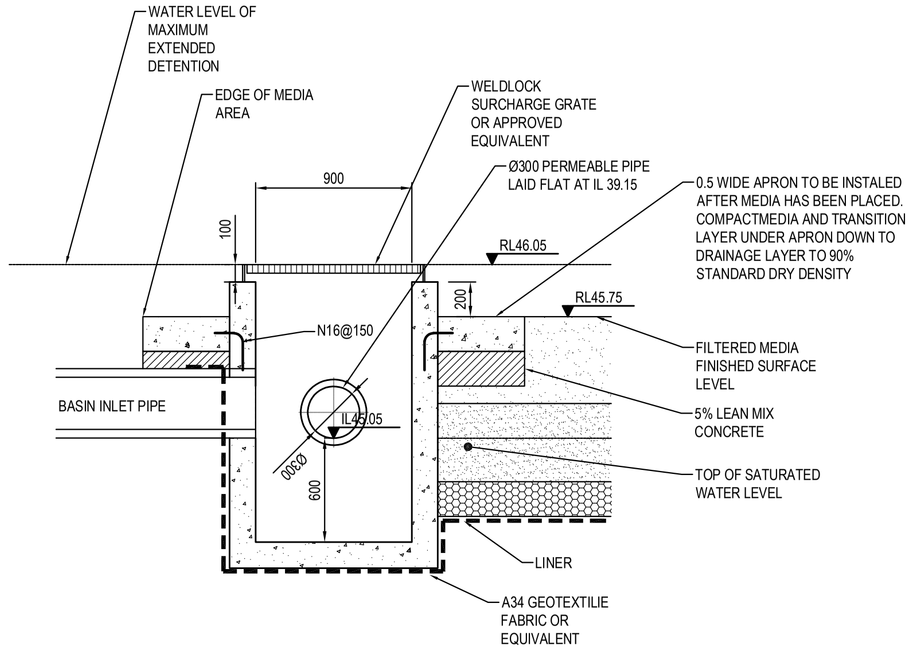

BIO-RETENTION SYSTEM INLET PIT

SCALE 1:25

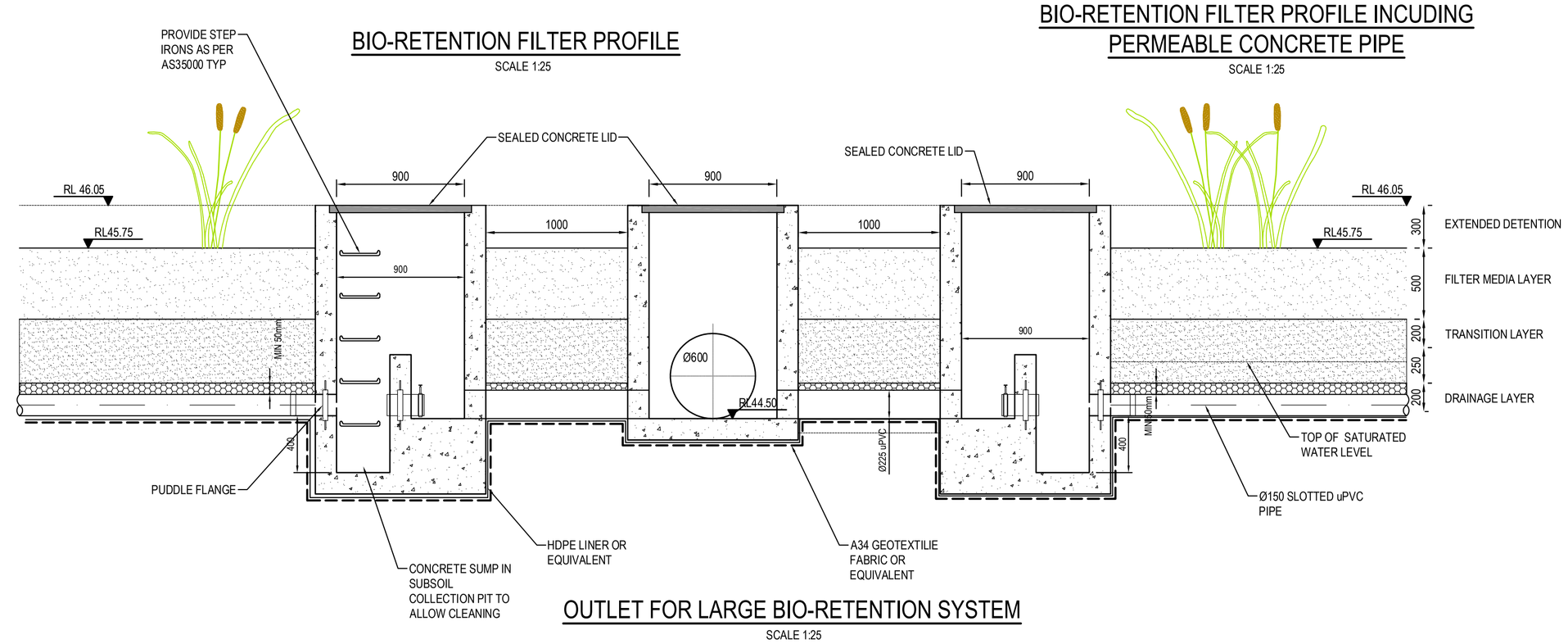

OUTLET FOR LARGE BIO-RETENTION SYSTEM

SCALE 1:25

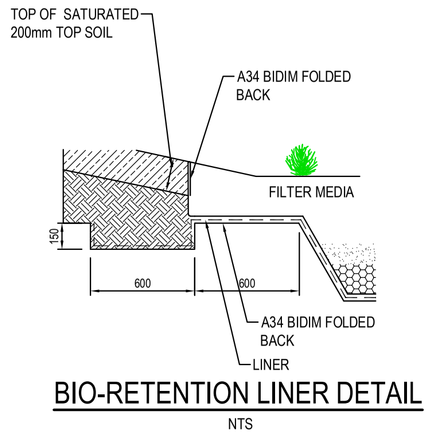

BIO-RETENTION LINER DETAIL

NTS

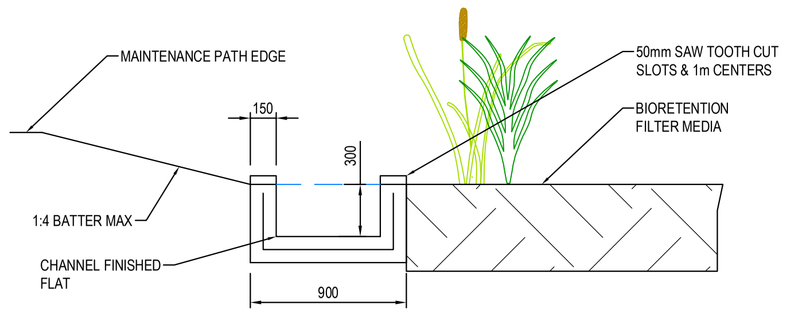

PERIMETER DISTRIBUTION DRAIN

SCALE 1:25

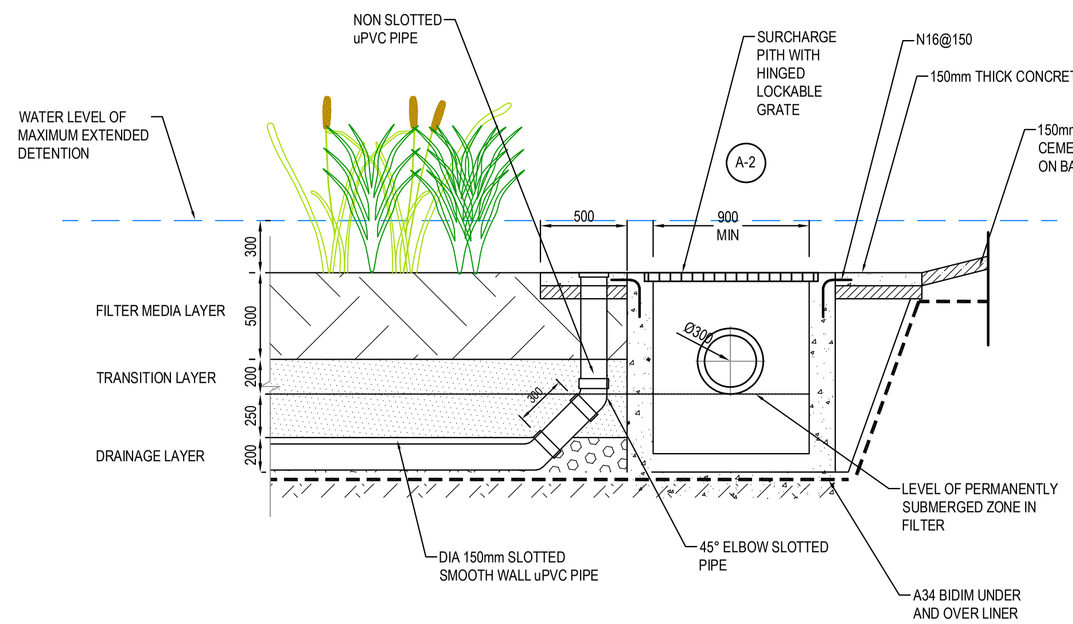

TYPICAL UPFLOW OUTLET PIT LOCATED IN BIORETENTION BASIN

NTS

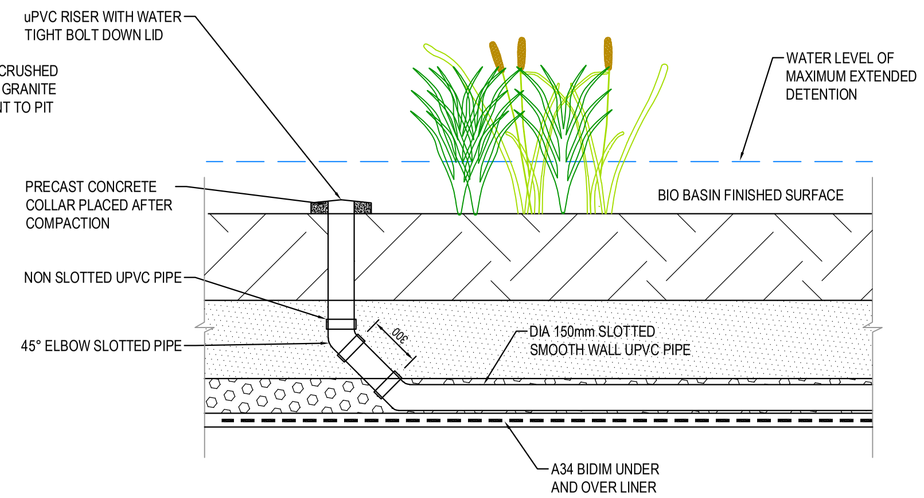

FLUSHING POINT

NTS

NOTE:
ACCESS PATH TO HAVE MAXIMUM 10% LONGITUDINAL GRADE

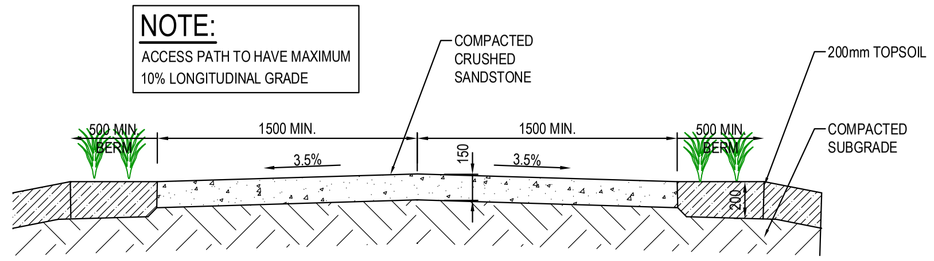

MAINTENANCE ACCESS TRACK

SCALE 1:25

0 500 1000 1500 2000 2500mm

500 300 100

SCALE 1:25

ISSUED FOR APPROVAL

REVISION	AMENDMENT	DRAWN	DESIGNED	DATE
03	ISSUED FOR APPROVAL	MS	NW	09.04.2019
02	ISSUED FOR CO-ORDINATION	IK	NW	05.04.2019
01	PRELIMINARY	MS	NW	29.03.2019

Client: WESTERN SYDNEY PARKLANDS TRUST

NETTLETONTRIBE

This drawing and design remains the property of Henry & Hymas and may not be copied in whole or in part without the prior written approval of Henry & Hymas.

Level 5,
79 Victoria Avenue
Chatswood NSW 2067

Telephone +61 2 9417 8400
Facsimile +61 2 9417 8337
Email email@hhconsult.com.au
Web www.henryandhymas.com.au

henry&hymas

Project: LIGHT HORSE INTERCHANGE BUSINESS HUB
EASTERN CREEK, NSW (SSD9667)

Drawn	Designed	Date
M.Stimova	L.Caha	FEB 2019
Checked	Approved	Scale @A1
N.Wetzlar	A.Francis	AS NOTED

Title: BASIN DETAILS
SHEET 1 OF 2

Drawing number: 18652_SSDA_C240

Revision: 03

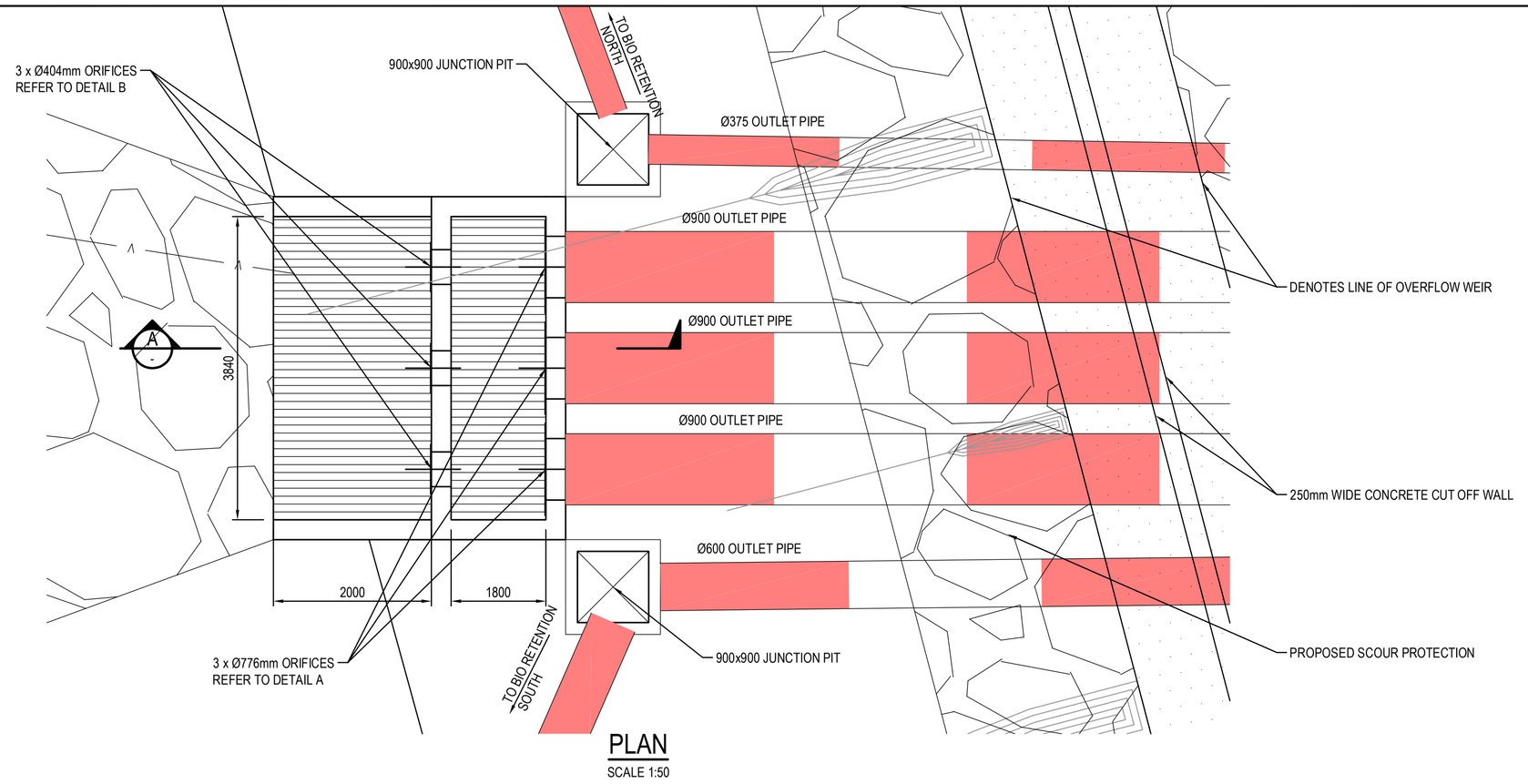

PLAN
SCALE 1:50

Above Ground OSD Summary with calculated values	
Site:	
Site Area	336294 m²
Site Area NOT Draining to OSD	18128 m²
Reduced Levels (AHD):	
RL of Top of Tank	47.375
RL of Bottom of OSD Tank	45
RL of 1.5 Year ARI Overflow Weir	46.32
RL of Emergency Overflow Weir	47.005
RL of 1.5 Year ARI Orifice Centerline	44.904
RL of 100 Year ARI Orifice Centreline	45.038
RL of Invert of Discharge to Council Drainage Pit	0
RL of obvert of Pit outlet pipe	44.95
Minium RL of Garage Floor	47.465
Minium RL of House Floor	47.565
OSD Volume:	
Required Storage BELOW 1.5 Year ARI Overflow Weir	10280.5 m³
Required Storage BELOW Emergency Overflow Weir	15592.1 m³
Discharge Details:	
Using Filter Cartridges to Manage Water Quality	No
Discharge Location	Council Drainage Pit
Length of Emergency Overflow Weir	35.00 m
Maximum 1.5 Year ARI Site Discharge	1236.41 L/s
1.5 Year ARI Orifice Discharge	1236.41 L/s
Maximum 100 Year ARI Site Discharge	5374.418
100 Year ARI Orifice Discharge	5374.42 L/s
Orifice Details:	
Number of 1.5 Year ARI Orifices	3
Number of 100 Year ARI Orifices	3
1.5 Year ARI Orifice Size (mm)	404.0 mm
100 Year ARI Orifice Size (mm)	776.0 mm
Notifications:	
Due to the Outlet Orifice being drowned by 2.7% during 100 ARI event an extra 1.9% of Storage volume has been added.	

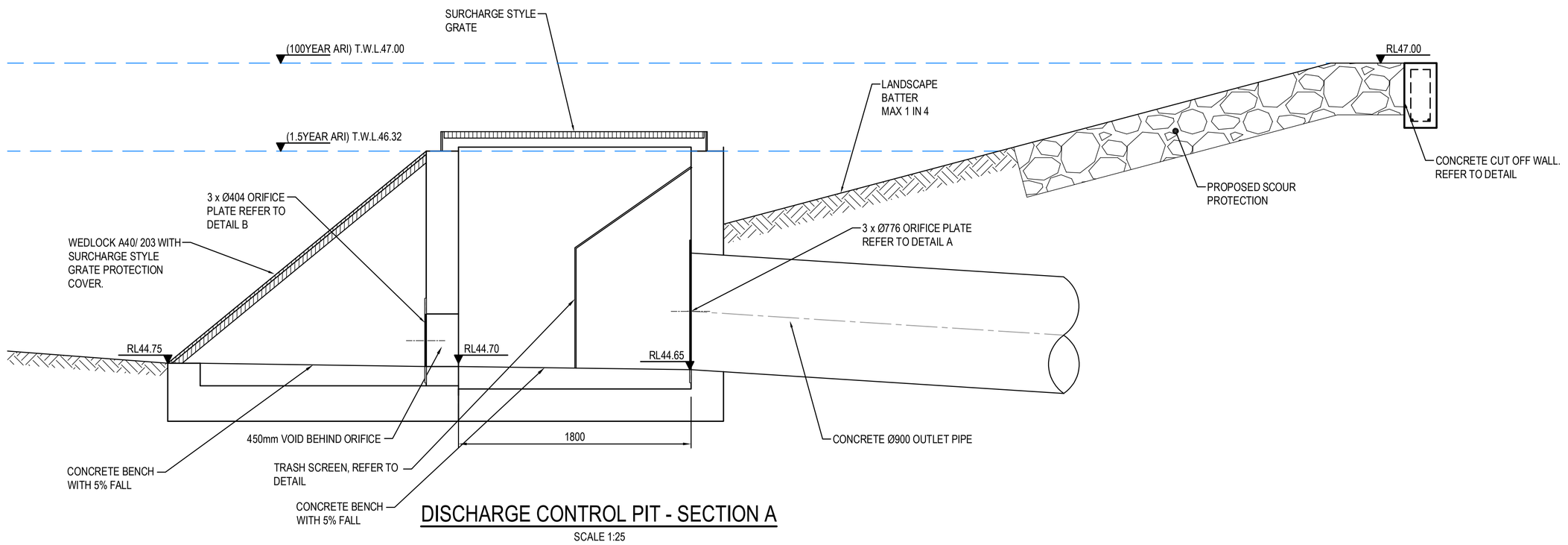

DISCHARGE CONTROL PIT - SECTION A
SCALE 1:25

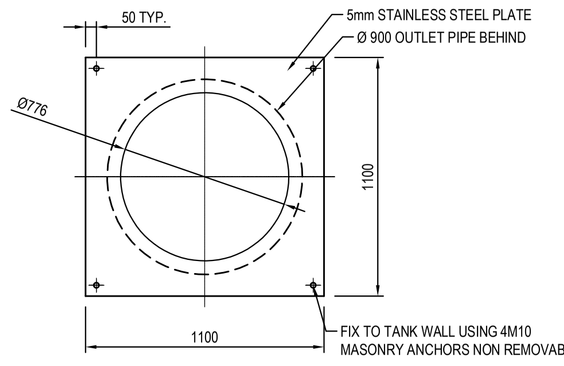

ORIFICE PLATE DETAIL A
SCALE 1:20

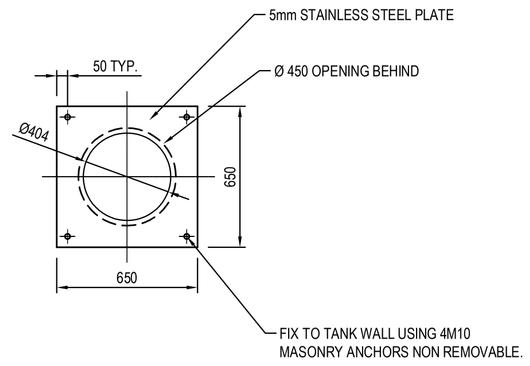

ORIFICE PLATE DETAIL B
SCALE 1:20

100 x 16 MOUNTING BAR WITH BRACKETS, SCREEN TO BE ATTACHED (GENERALLY ON A SLIDING MECHANISM) TO THE WALL, BUT SHOULD BE REMOVABLE (WITHOUT THE USE OF TOOLS) TO PERMIT CLEANSING AND EASY INSPECTION OF THE OUTLET CONTROL. ALL STEEL TO BE HOT DIPPED GALVANISED.

SCREEN TYPE WELDLOK A40/203 IS RECOMENDED FOR ORIFICES LARGER THAN 150mm AND SCREEN AREA 20 x THE ORIFICE AREA.

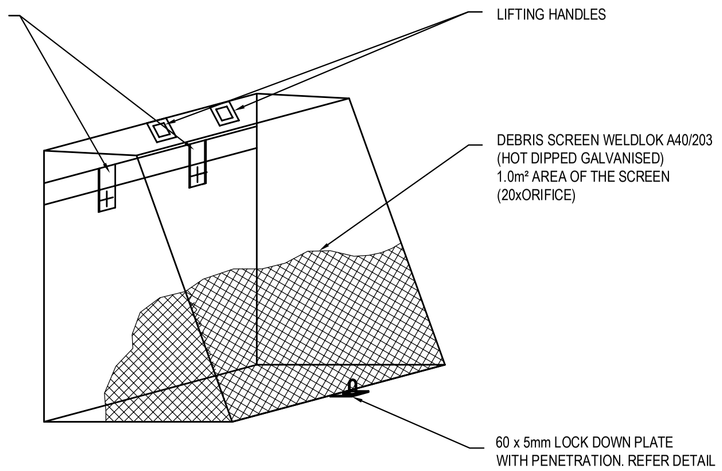

DEBRIS SCREEN DETAIL
NOT TO SCALE
ALL STEEL TO BE HOT DIPPED GALVANISED

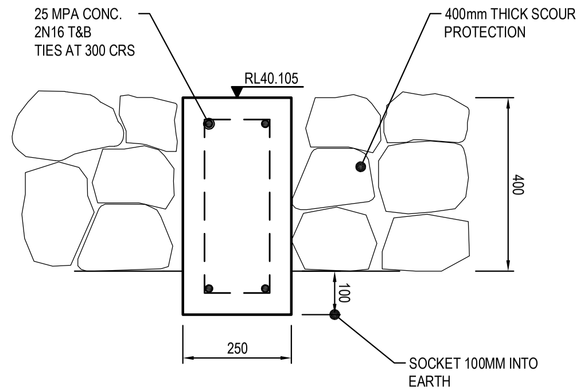

CUT OF WALL DETAIL
SCALE 1:10

0 500 1000 1500 2000 2500mm
500 300 100
SCALE 1:25

0 1000 2000 3000 4000 5000mm
1000 600 200
SCALE 1:50

ISSUED FOR APPROVAL

REVISION	AMENDMENT	DRAWN	DESIGNED	DATE
03	ISSUED FOR APPROVAL	MS	NW	09.04.2019
02	ISSUED FOR CO-ORDINATION	IK	NW	05.04.2019
01	PRELIMINARY	MS	NW	29.03.2019

Client: WESTERN SYDNEY PARKLANDS TRUST

NETTLETONTRIBE

This drawing and design remains the property of Henry & Hymas and may not be copied in whole or in part without the prior written approval of Henry & Hymas.

Level 5,
79 Victoria Avenue
Chatswood NSW 2067

Telephone +61 2 9417 8400
Facsimile +61 2 9417 8337
Email email@hhconsult.com.au
Web www.henryandhymas.com.au

henry&hymas

Project: LIGHT HORSE INTERCHANGE BUSINESS HUB
EASTERN CREEK, NSW (SSD9667)

Title: BASIN DETAILS
SHEET 2 OF 2

Drawn	Designed	Date
M.Stimova	L.Caha	FEB 2019
Checked	Approved	Scale @A1
N.Wetzlar	A.Francis	AS NOTED

Drawing number: 18652_SSDA_C241

Revision: 03

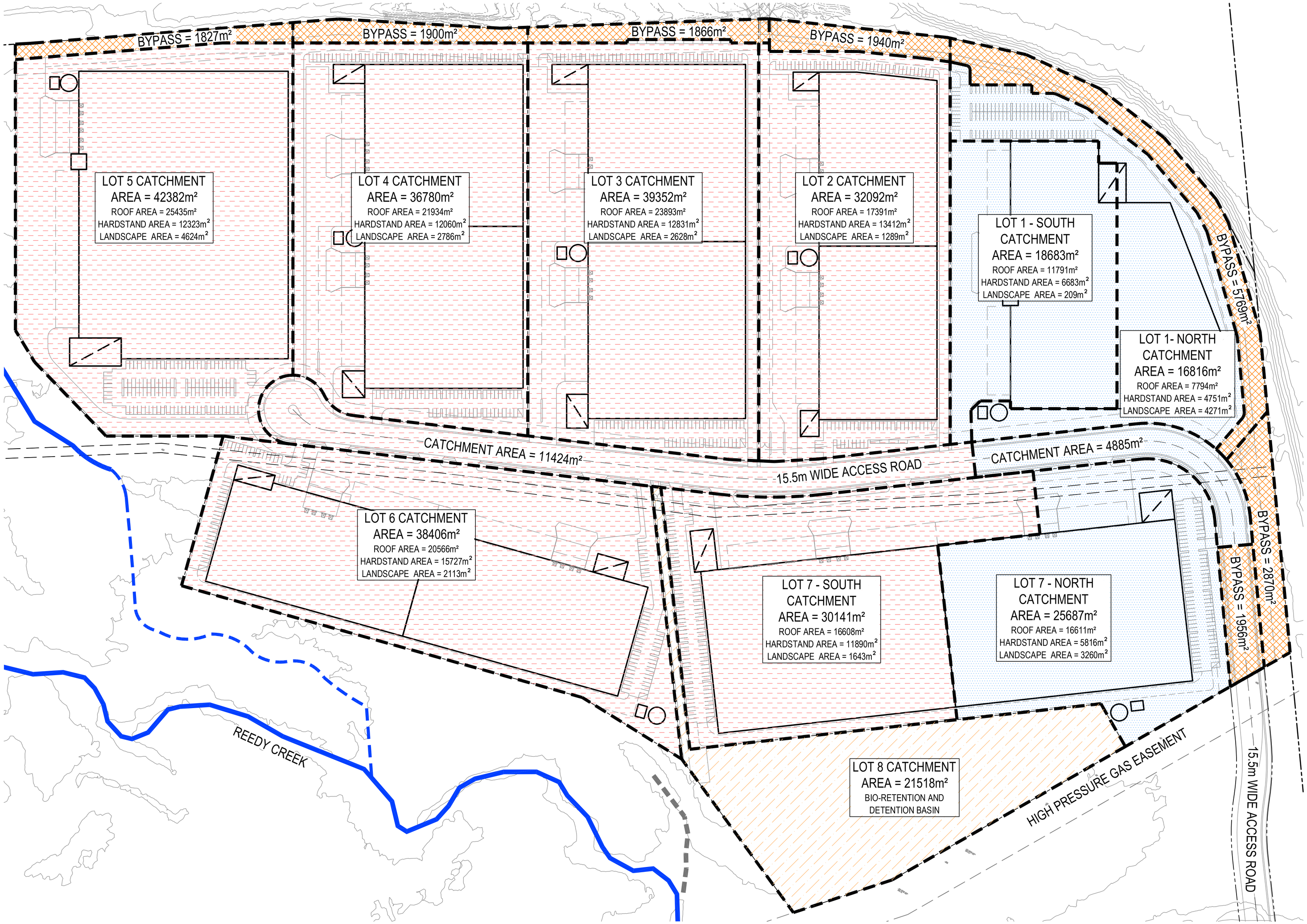

CATCHMENT PLAN
SCALE 1:1250

0 25 50 75 100 125m
25 15 5
SCALE 1:1250

ISSUED FOR APPROVAL

SURVEY INFORMATION
SURVEYED BY .....
DATUM: .....
ORIGIN OF LEVELS: .....

REVISION	AMENDMENT	DRAWN	DESIGNED	DATE
03	ISSUED FOR APPROVAL	MS	NW	09.04.2019
02	ISSUED FOR CO-ORDINATION	IK	NW	05.04.2019
01	PRELIMINARY	IK	NW	29.03.2019

Client
WESTERN SYDNEY PARKLANDS TRUST

NETTLETONTRIBE

This drawing and design remains the property of Henry & Hymas and may not be copied in whole or in part without the prior written approval of Henry & Hymas.

Level 5,
79 Victoria Avenue
Chatswood NSW 2067

Telephone
+61 2 9417 8400
Facsimile
+61 2 9417 8337
Email
email@hhconsult.com.au
Web
www.henryandhymas.com.au

henry&hymas

Project
LIGHT HORSE INTERCHANGE BUSINESS HUB
EASTERN CREEK, NSW (SSD9667)

Drawn: M.Stimova | Designed: L.Caha | Date: FEB 2019
Checked: N.Wetzlar | Approved: A.Francis | Scale @A1: 1:1250

Title
CATCHMENT PLAN

Drawing number
18652_SSDA_C250

Revision
03

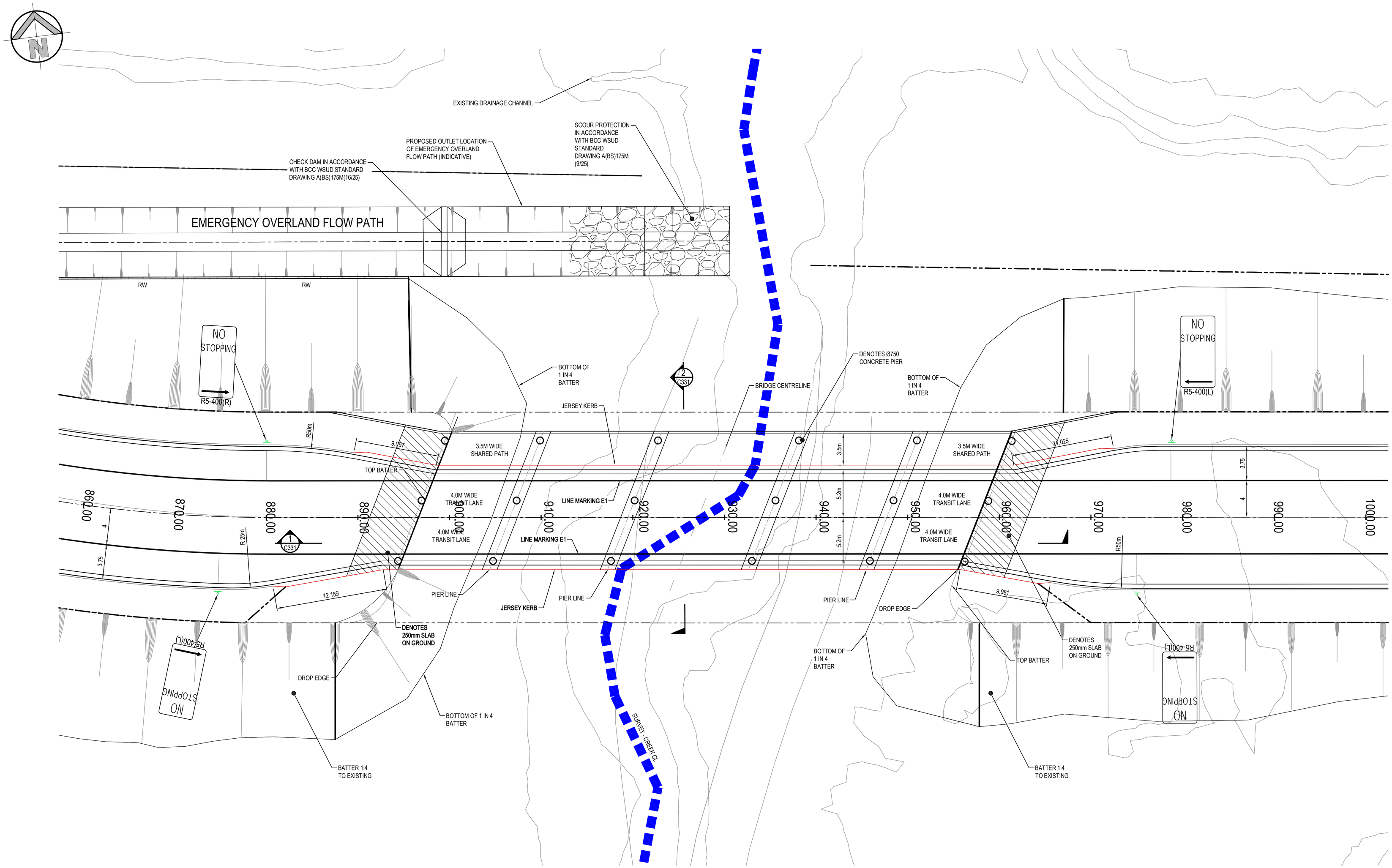

BRIDGE CONCEPT PLAN

SCALE 1:200

0 4 8 12 16 20m

4 3 2 1

SCALE 1:200

ISSUED FOR APPROVAL

REVISION	AMENDMENT	DRAWN	DESIGNED	DATE
03	ISSUED FOR APPROVAL	MS	NW	09.04.2019
02	ISSUED FOR CO-ORDINATION	IK	NW	05.04.2019
01	PRELIMINARY	IK	NW	04.04.2019

Client
WESTERN SYDNEY PARKLANDS TRUST

Architect
NETTLETONTRIBE

This drawing and design remains the property of Henry & Hymas and may not be copied in whole or in part without the prior written approval of Henry & Hymas.

Level 5,
79 Victoria Avenue
Chatswood NSW 2067

Telephone +61 2 9417 8400
Facsimile +61 2 9417 8337
Email email@hhconsult.com.au
Web www.henryandhymas.com.au

henry&hymas

Project
LIGHT HORSE INTERCHANGE BUSINESS HUB
EASTERN CREEK, NSW (SSD9667)

Title
BRIDGE CONCEPT PLAN

Drawn	Designed	Date
M.Stimova	L.Caha	FEB 2019
Checked	Approved	Scale @A1
N.Wetzlar	A.Francis	1:200

Drawing number
18652_SSDA_C330

Revision
03

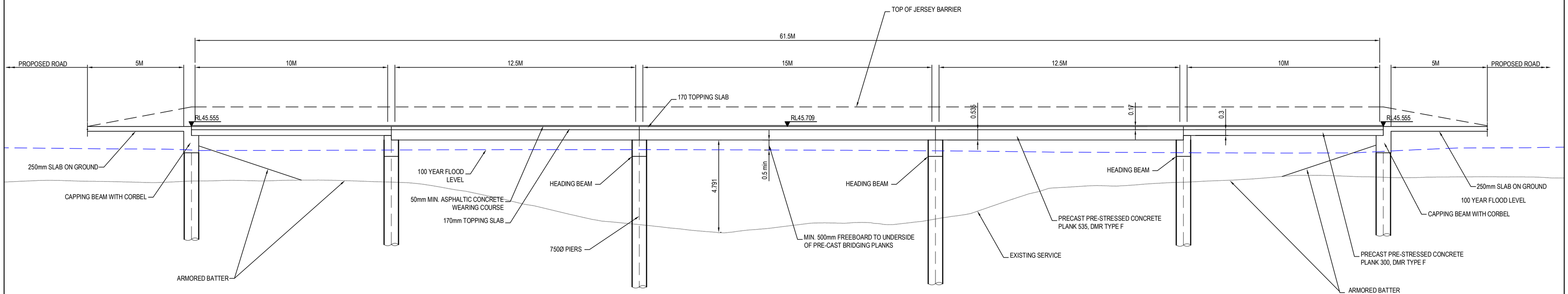

SECTION 1 / C330
SCALE: 1:100

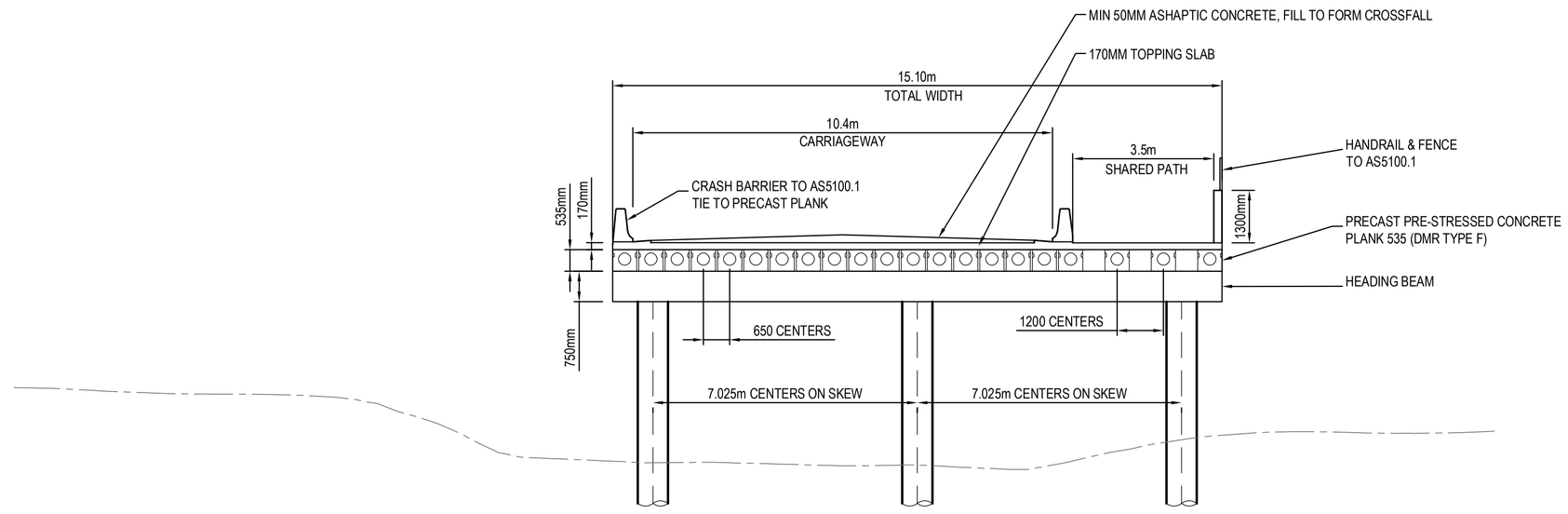

SECTION 2 / C330
SCALE: 1:100

0 2 4 6 8 10m
2 1
SCALE 1:100

ISSUED FOR APPROVAL

REVISION	AMENDMENT	DRAWN	DESIGNED	DATE	REVISION	AMENDMENT	DRAWN	DESIGNED	DATE
03	ISSUED FOR APPROVAL	MS	NW	09.04.2019					
02	ISSUED FOR CO-ORDINATION	IK	NW	05.04.2019					
01	CONCEPT	IK	NW	04.04.2019					

Client
WESTERN SYDNEY PARKLANDS TRUST

Architect
NETTLETONTRIBE

This drawing and design remains the property of Henry & Hymas and may not be copied in whole or in part without the prior written approval of Henry & Hymas.

Level 5,
79 Victoria Avenue
Chatswood NSW 2067

Telephone
+61 2 9417 8400
Facsimile
+61 2 9417 8337
Email
email@hhconsult.com.au
Web
www.henryandhymas.com.au

henry&hymas

Project
LIGHT HORSE INTERCHANGE BUSINESS HUB
EASTERN CREEK, NSW (SSD9667)

Title
BRIDGE CONCEPT SECTIONS

Drawn	Designed	Date
M.Stimova	L.Caha	FEB 2019
Checked	Approved	Scale @A1
N.Wetzlar	A.Francis	1:200

Drawing number
18652_SSDA_C331

Revision
03

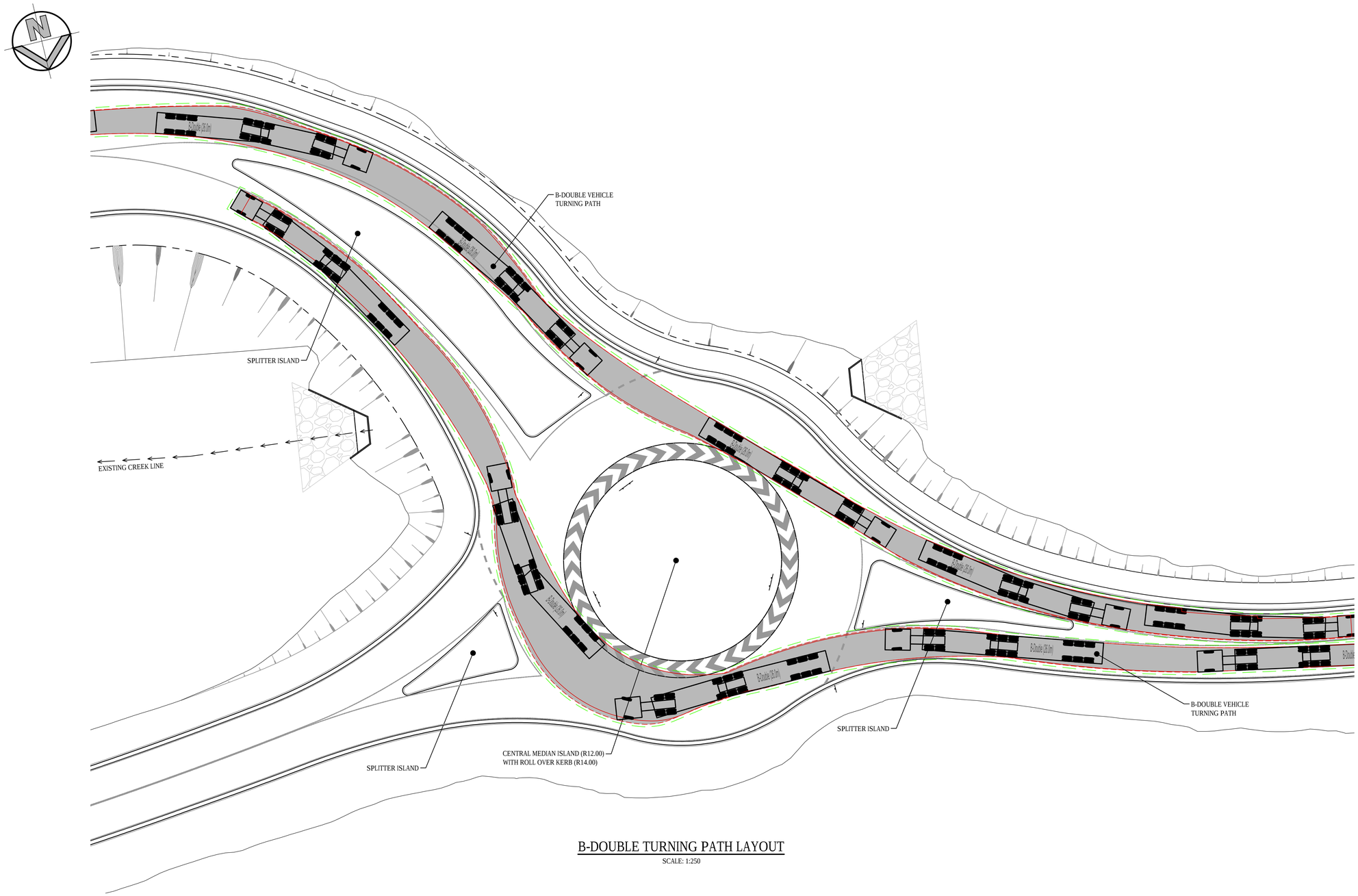

B-DOUBLE TURNING PATH LAYOUT

SCALE: 1:250

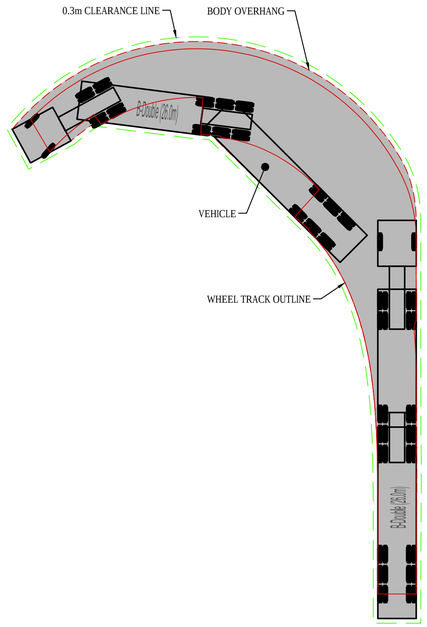

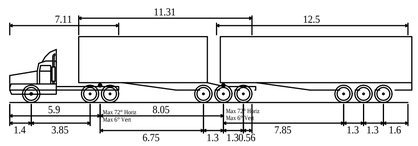

B-Double (26.0m)	
Overall Length	26.000m
Overall Width	2.500m
Overall Body Height	4.300m
Min Body Ground Clearance	0.540m
Track Width	2.500m
Lock-to-lock time	6.00s
Curb to Curb Turning Radius	15.000m

B-DOUBLE VEHICLE PROFILE

SCALE: 1:500

0 5 10 15 20 25m

5 4 3 2 1

SCALE 1:250

ISSUED FOR APPROVAL

REVISION	AMENDMENT	DRAWN	DESIGNED	DATE
01	ISSUED FOR APPROVAL	BH	BH	23.05.2019

Client: WESTERN SYDNEY PARKLANDS TRUST

NETTLETONTRIBE

This drawing and design remains the property of Henry & Hymas and may not be copied in whole or in part without the prior written approval of Henry & Hymas.

Level 5,
79 Victoria Avenue
Chatswood NSW 2067

Telephone +61 2 9417 8400
Facsimile +61 2 9417 8337
Email email@hhconsult.com.au
Web www.henryandhymas.com.au

henry&hymas

Project: LIGHT HORSE INTERCHANGE BUSINESS HUB
EASTERN CREEK, NSW (SSD9667)

Title: B-DOUBLE VEHICLE TURNING PATHS
SHEET 1 OF 8

Drawn	Designed	Date
B.Hurlstone	B.Hurlstone	MAY 2019
Checked	**Approved**	**Scale @A1**
N.Wetzlar	A.Francis	1:250

Drawing number: 18652_SSDA_C600

Revision: 01

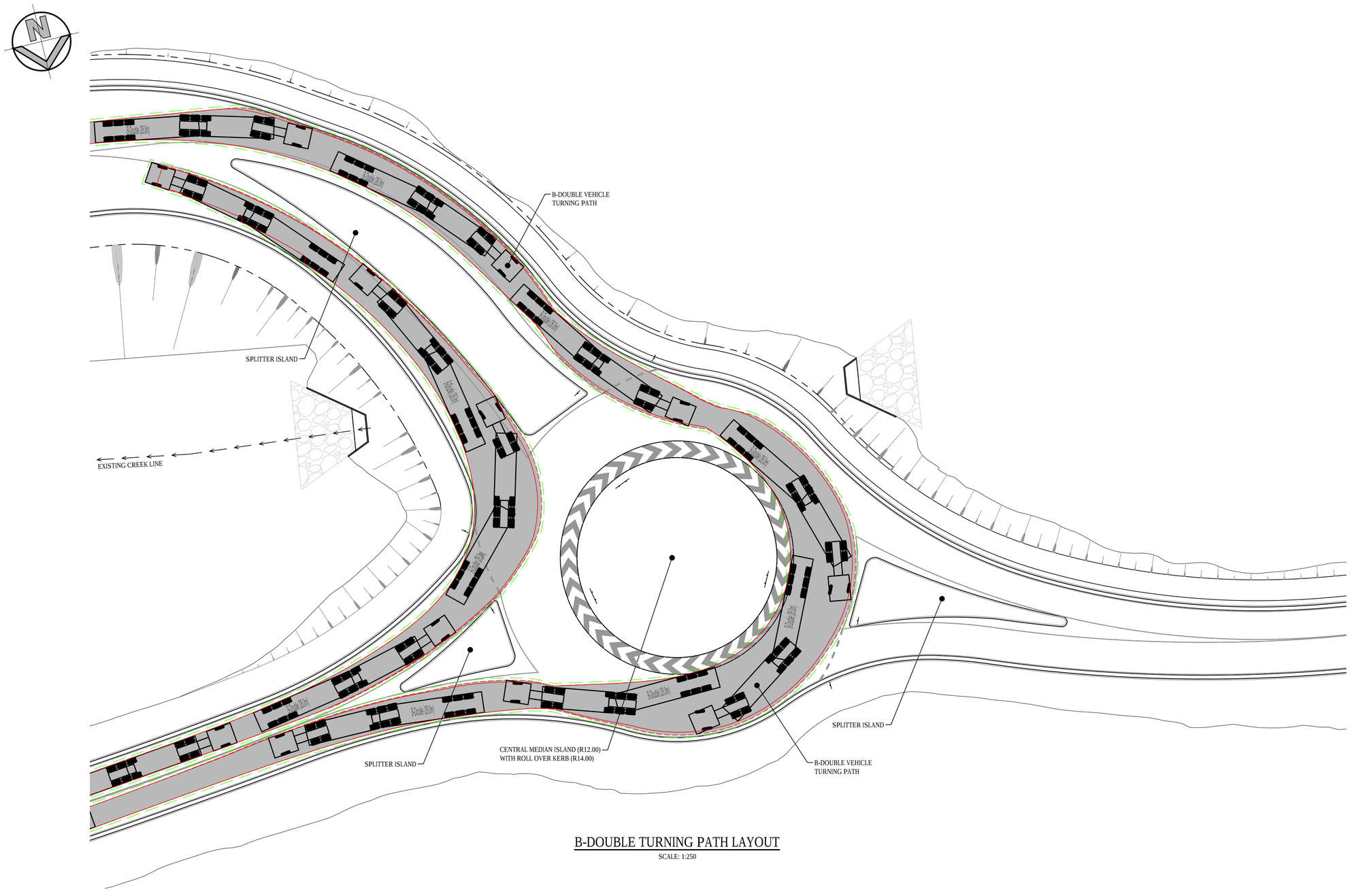

B-DOUBLE TURNING PATH LAYOUT

SCALE: 1:250

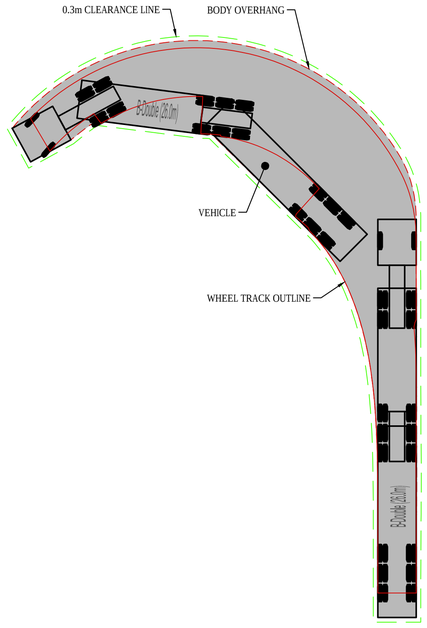

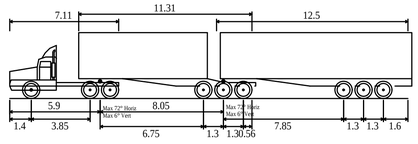

B-Double (26.0m)	
Overall Length	26.000m
Overall Width	2.500m
Overall Body Height	4.300m
Min Body Ground Clearance	0.540m
Track Width	2.500m
Lock-to-lock time	6.00s
Curb to Curb Turning Radius	15.000m

B-DOUBLE VEHICLE PROFILE

SCALE: 1:500

0 5 10 15 20 25m

5 4 3 2 1

SCALE 1:250

ISSUED FOR APPROVAL

REVISION	AMENDMENT	DRAWN	DESIGNED	DATE
01	ISSUED FOR APPROVAL	BH	BH	23.05.2019

Client: WESTERN SYDNEY PARKLANDS TRUST

NETTLETONTRIBE

This drawing and design remains the property of Henry & Hymas and may not be copied in whole or in part without the prior written approval of Henry & Hymas.

Level 5,
79 Victoria Avenue
Chatswood NSW 2067

Telephone +61 2 9417 8400
Facsimile +61 2 9417 8337
Email email@hhconsult.com.au
Web www.henryandhymas.com.au

henry&hymas

Project: LIGHT HORSE INTERCHANGE BUSINESS HUB
EASTERN CREEK, NSW (SSD9667)

Title: B-DOUBLE VEHICLE TURNING PATHS
SHEET 2 OF 8

Drawn	Designed	Date
B.Hurlstone	B.Hurlstone	MAY 2019
Checked	**Approved**	**Scale @A1**
N.Wetzlar	A.Francis	1:250

Drawing number: 18652_SSDA_C601

Revision: 01

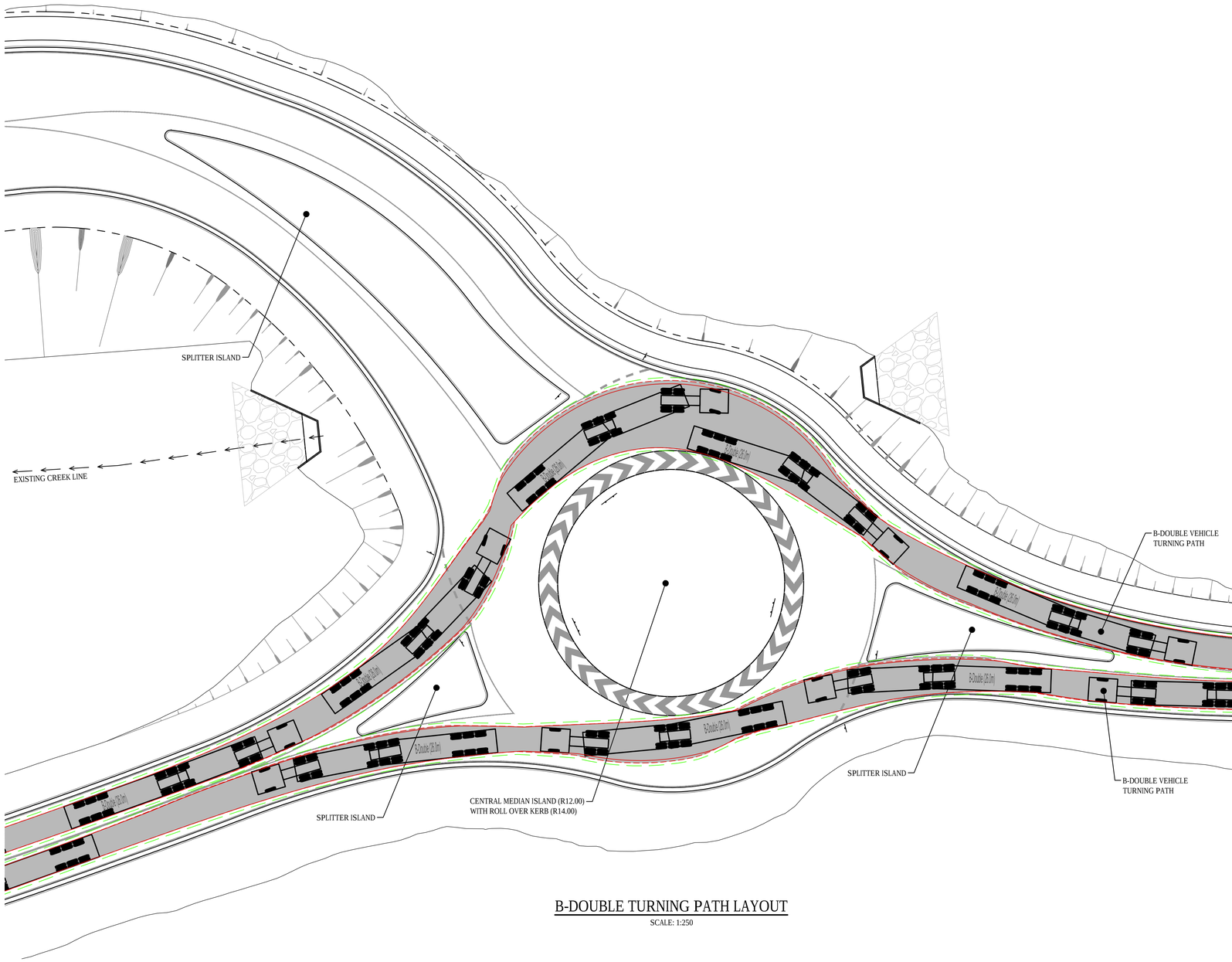

B-DOUBLE TURNING PATH LAYOUT

SCALE: 1:250

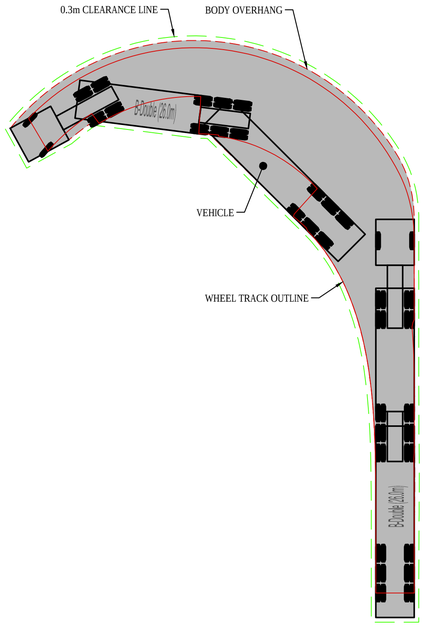

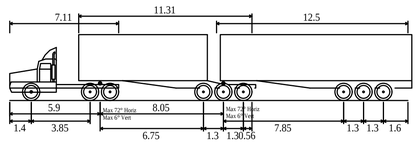

B-Double (26.0m)

Overall Length	26.000m
Overall Width	2.500m
Overall Body Height	4.300m
Min Body Ground Clearance	0.540m
Track Width	2.500m
Lock-to-lock time	6.00s
Curb to Curb Turning Radius	15.000m

B-DOUBLE VEHICLE PROFILE

SCALE: 1:500

0 5 10 15 20 25m

5 4 3 2 1

SCALE 1:250

ISSUED FOR APPROVAL

REVISION	AMENDMENT	DRAWN	DESIGNED	DATE
01	ISSUED FOR APPROVAL	BH	BH	23.05.2019

Client: WESTERN SYDNEY PARKLANDS TRUST

NETTLETONTRIBE

This drawing and design remains the property of Henry & Hymas and may not be copied in whole or in part without the prior written approval of Henry & Hymas.

Level 5,
79 Victoria Avenue
Chatswood NSW 2067

Telephone +61 2 9417 8400
Facsimile +61 2 9417 8337
Email email@hhconsult.com.au
Web www.henryandhymas.com.au

henry&hymas

Project: LIGHT HORSE INTERCHANGE BUSINESS HUB
EASTERN CREEK, NSW (SSD9667)

Drawn	Designed	Date
B.Hurlstone	B.Hurlstone	MAY 2019
Checked	Approved	Scale @A1
N.Wetzlar	A.Francis	1:250

Title: B-DOUBLE VEHICLE TURNING PATHS
SHEET 3 OF 8

Drawing number: 18652_SSDA_C602

Revision: 01

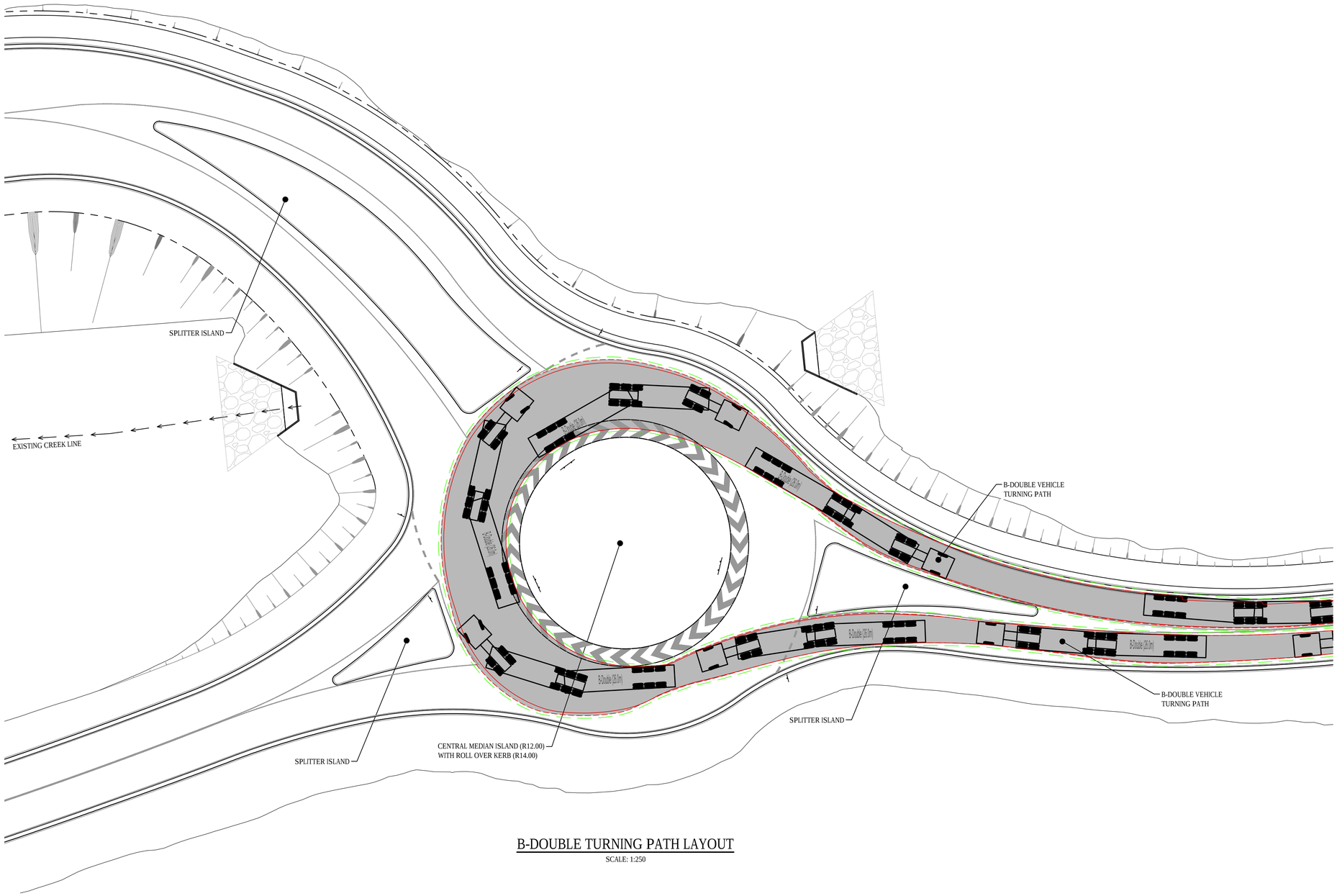

B-DOUBLE TURNING PATH LAYOUT

SCALE: 1:250

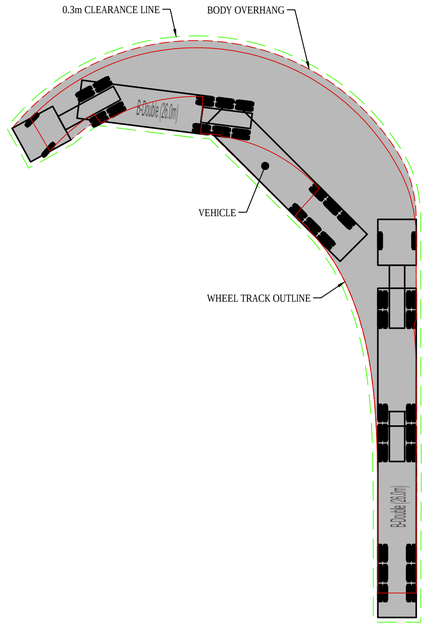

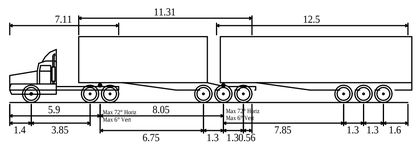

B-Double (26.0m)	
Overall Length	26.000m
Overall Width	2.500m
Overall Body Height	4.300m
Min Body Ground Clearance	0.540m
Track Width	2.500m
Lock-to-lock time	6.00s
Curb to Curb Turning Radius	15.000m

B-DOUBLE VEHICLE PROFILE

SCALE: 1:500

0 5 10 15 20 25m

5 4 3 2 1

SCALE 1:250

ISSUED FOR APPROVAL

REVISION	AMENDMENT	DRAWN	DESIGNED	DATE	REVISION	AMENDMENT	DRAWN	DESIGNED	DATE
01	ISSUED FOR APPROVAL	BH	BH	23.05.2019					

Client: WESTERN SYDNEY PARKLANDS TRUST

NETTLETONTRIBE

This drawing and design remains the property of Henry & Hymas and may not be copied in whole or in part without the prior written approval of Henry & Hymas.

Level 5,
79 Victoria Avenue
Chatswood NSW 2067

Telephone +61 2 9417 8400
Facsimile +61 2 9417 8337
Email email@hhconsult.com.au
Web www.henryandhymas.com.au

henry&hymas

Project: LIGHT HORSE INTERCHANGE BUSINESS HUB
EASTERN CREEK, NSW (SSD9667)

Title: B-DOUBLE VEHICLE TURNING PATHS
SHEET 4 OF 8

Drawn	Designed	Date
B.Hurlstone	B.Hurlstone	MAY 2019
Checked	**Approved**	**Scale @A1**
N.Wetzlar	A.Francis	1:250

Drawing number: 18652_SSDA_C603

Revision: 01

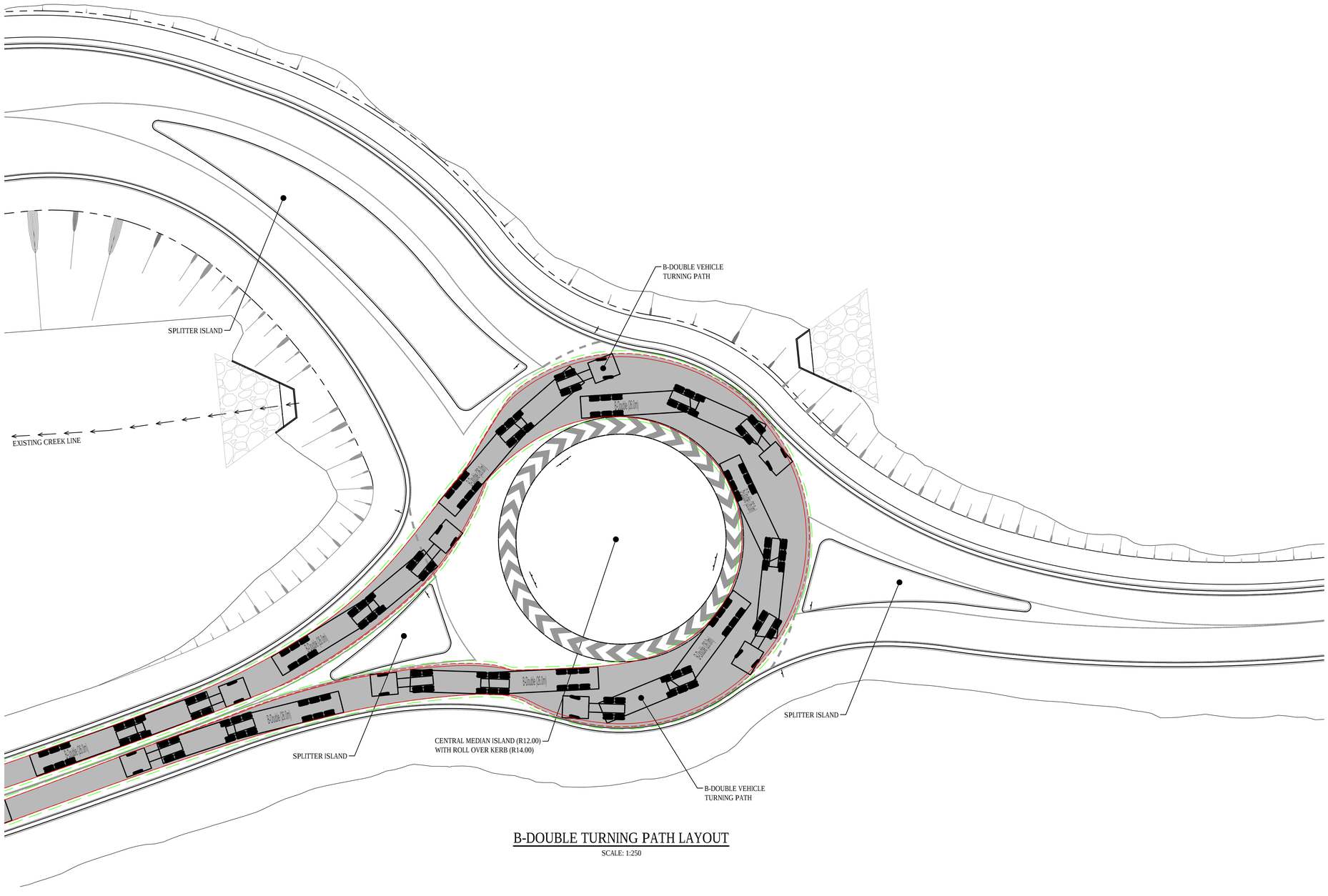

B-DOUBLE TURNING PATH LAYOUT

SCALE: 1:250

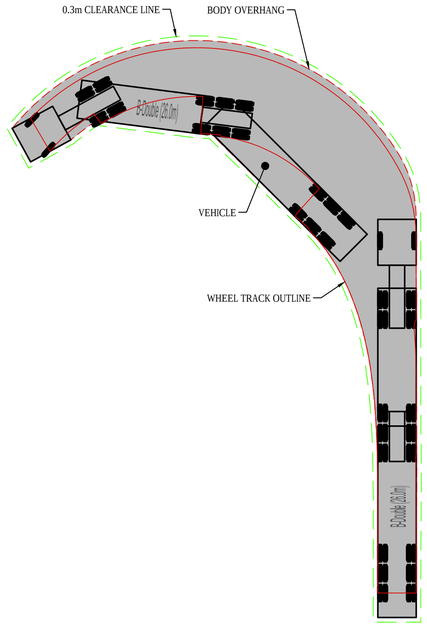

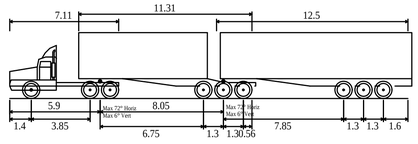

B-Double (26.0m)	
Overall Length	26.000m
Overall Width	2.500m
Overall Body Height	4.300m
Min Body Ground Clearance	0.540m
Track Width	2.500m
Lock-to-lock time	6.00s
Curb to Curb Turning Radius	15.000m

B-DOUBLE VEHICLE PROFILE

SCALE: 1:500

0 5 10 15 20 25m

5 4 3 2 1

SCALE 1:250

ISSUED FOR APPROVAL

REVISION	AMENDMENT	DRAWN	DESIGNED	DATE
01	ISSUED FOR APPROVAL	BH	BH	23.05.2019

Client: WESTERN SYDNEY PARKLANDS TRUST

NETTLETONTRIBE

This drawing and design remains the property of Henry & Hymas and may not be copied in whole or in part without the prior written approval of Henry & Hymas.

Level 5,
79 Victoria Avenue
Chatswood NSW 2067

Telephone +61 2 9417 8400
Facsimile +61 2 9417 8337
Email email@hhconsult.com.au
Web www.henryandhymas.com.au

henry&hymas

Project: LIGHT HORSE INTERCHANGE BUSINESS HUB
EASTERN CREEK, NSW (SSD9667)

Title: B-DOUBLE VEHICLE TURNING PATHS
SHEET 5 OF 8

Drawn	Designed	Date
B.Hurlstone	B.Hurlstone	MAY 2019
Checked	**Approved**	**Scale @A1**
N.Wetzlar	A.Francis	1:250

Drawing number: 18652_SSDA_C604

Revision: 01

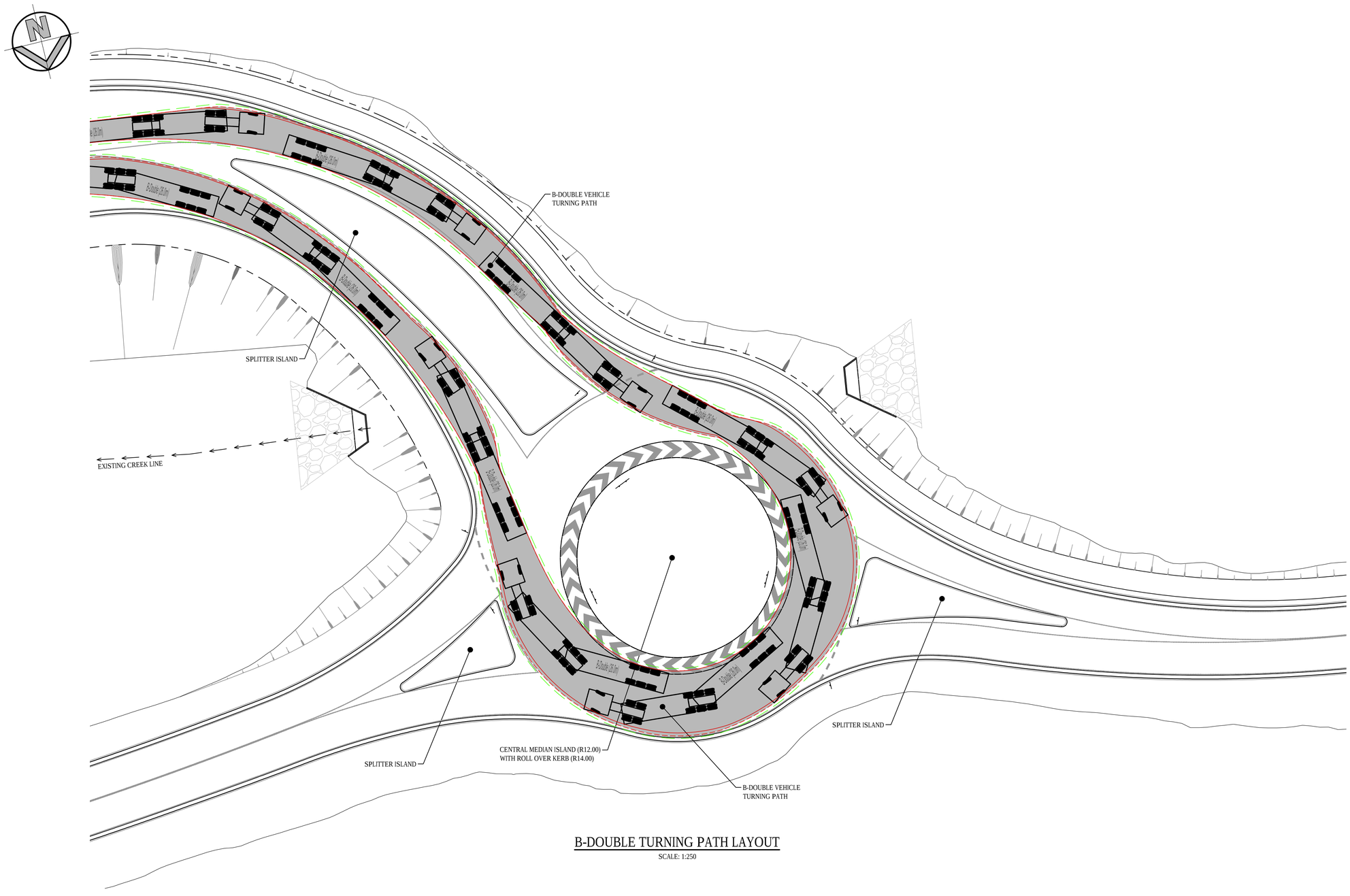

B-DOUBLE TURNING PATH LAYOUT

SCALE: 1:250

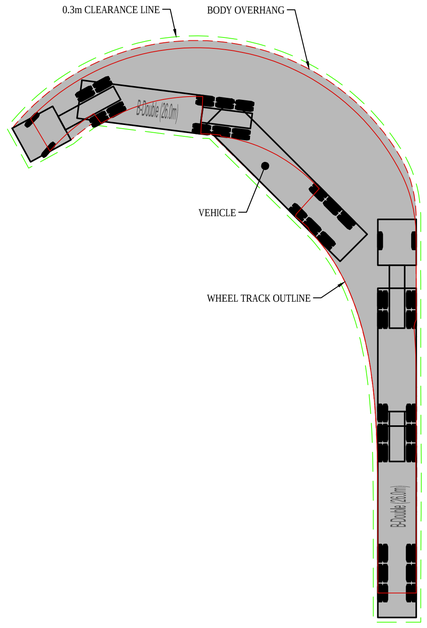

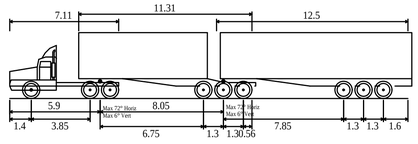

B-Double (26.0m)	
Overall Length	26.000m
Overall Width	2.500m
Overall Body Height	4.300m
Min Body Ground Clearance	0.540m
Track Width	2.500m
Lock-to-lock time	6.00s
Curb to Curb Turning Radius	15.000m

B-DOUBLE VEHICLE PROFILE

SCALE: 1:500

0 5 10 15 20 25m

5 4 3 2 1

SCALE 1:250

ISSUED FOR APPROVAL

REVISION	AMENDMENT	DRAWN	DESIGNED	DATE
01	ISSUED FOR APPROVAL	BH	BH	23.05.2019

Client
WESTERN SYDNEY PARKLANDS TRUST

NETTLETONTRIBE

This drawing and design remains the property of Henry & Hymas and may not be copied in whole or in part without the prior written approval of Henry & Hymas.

Level 5,
79 Victoria Avenue
Chatswood NSW 2067

Telephone
+61 2 9417 8400
Facsimile
+61 2 9417 8337
Email
email@hhconsult.com.au
Web
www.henryandhymas.com.au

henry&hymas

Project
LIGHT HORSE INTERCHANGE BUSINESS HUB
EASTERN CREEK, NSW (SSD9667)

Title
B-DOUBLE VEHICLE TURNING PATHS
SHEET 6 OF 8

Drawn	Designed	Date
B.Hurlstone	B.Hurlstone	MAY 2019
Checked	**Approved**	**Scale @A1**
N.Wetzlar	A.Francis	1:250

Drawing number
18652_SSDA_C605

Revision
01



B-DOUBLE TURNING PATH LAYOUT

SCALE: 1:250

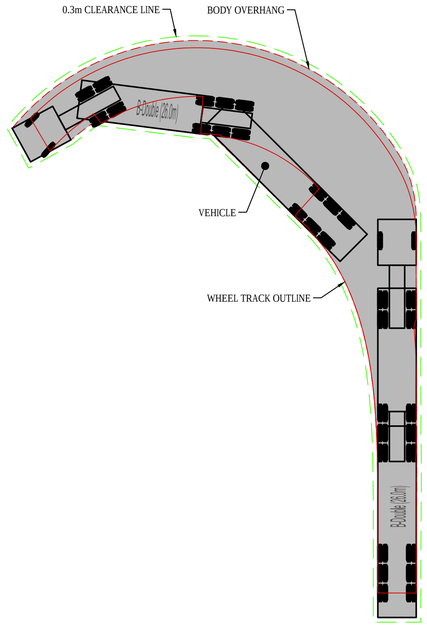

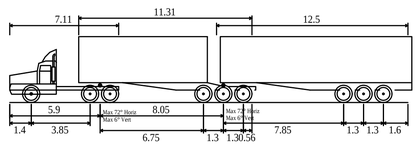

B-Double (26.0m)

Overall Length	26.000m
Overall Width	2.500m
Overall Body Height	4.300m
Min Body Ground Clearance	0.540m
Track Width	2.500m
Lock-to-lock time	6.00s
Curb to Curb Turning Radius	15.000m

B-DOUBLE VEHICLE PROFILE

SCALE: 1:500

0 5 10 15 20 25m

5 4 3 2 1

SCALE 1:250

ISSUED FOR APPROVAL

REVISION	AMENDMENT	DRAWN	DESIGNED	DATE	REVISION	AMENDMENT	DRAWN	DESIGNED	DATE
03	ISSUED FOR APPROVAL	BH	BH	23.05.2019					

Client

WESTERN SYDNEY PARKLANDS TRUST

NETTLETONTRIBE

This drawing and design remains the property of Henry & Hymas and may not be copied in whole or in part without the prior written approval of Henry & Hymas.

Level 5,
79 Victoria Avenue
Chatswood NSW 2067

Telephone
+61 2 9417 8400
Facsimile
+61 2 9417 8337
Email
email@hhconsult.com.au
Web
www.henryandhymas.com.au

henry&hymas

Project

LIGHT HORSE INTERCHANGE BUSINESS HUB
EASTERN CREEK, NSW (SSD9667)

Drawn	Designed	Date
B.Hurlstone	L.Caha	MAY 2019
Checked	**Approved**	**Scale @A1**
N.Wetzlar	A.Francis	1:250

Title

B-DOUBLE VEHICLE TURNING PATHS
SHEET 7 OF 8

Drawing number	Revision
18652_SSDA_C606	01

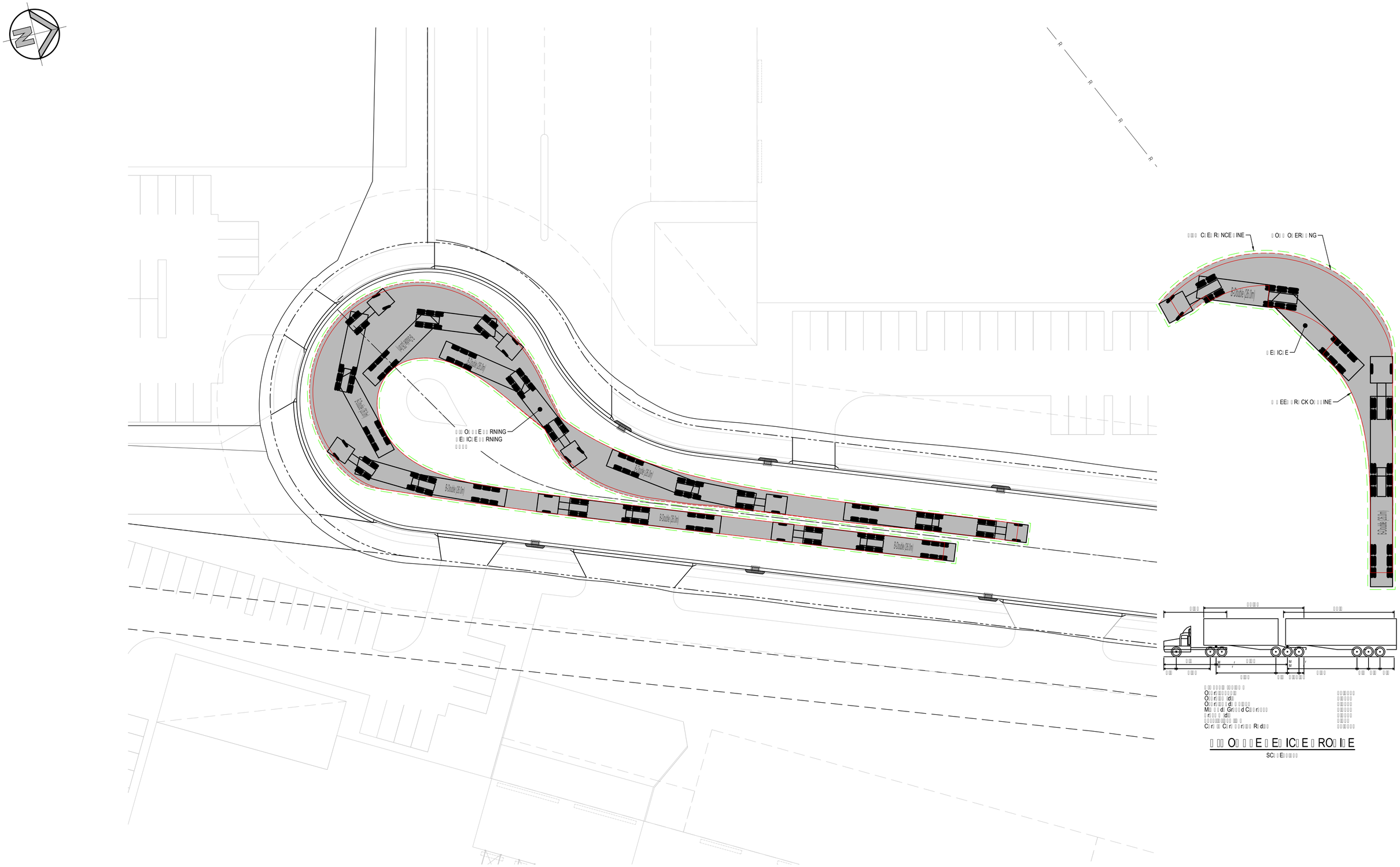

SCALE

ISSUED FOR APPROVAL

REVISION	AMENDMENT	DRAWN	DESIGNED	DATE	REVISION	AMENDMENT	DRAWN	DESIGNED	DATE
	ISSUE OR RO								

Client
WESTERN SYDNEY PARKLANDS TRUST

NETTLETONTRIBE

This drawing and design remains the property of Henry & Hymas and may not be copied in whole or in part without the prior written approval of Henry & Hymas.

Level 5,
79 Victoria Avenue
Chatswood NSW 2067

Telephone
+61 2 9417 8400
Facsimile
+61 2 9417 8337
Email
email@hhconsult.com.au
Web
www.henryandhymas.com.au

henry&hymas

Project
LIGHT HORSE INTERCHANGE BUSINESS HUB
EASTERN CREEK, NSW (SSD9667)

Title
B-DOUBLE VEHICLE TURNING PATHS
SHEET 8 OF 8

Drawn	Designed	Date
B.Hurlstone	L.Caha	MAY 2019
Checked	Approved	Scale @A1
N.Wetzlar	A.Francis	1:250

Drawing number
18652_SSDA_C607

Revision
01



0 10 20 30 40 50m
10 8 6 4 2
SCALE 1:500

EXTERNAL WORKS PLAN

SCALE: 1:500

ISSUED FOR APPROVAL

REVISION	AMENDMENT	DRAWN	DESIGNED	DATE
03	ISSUED FOR APPROVAL	IK	NW	09.04.2019
02	ISSUED FOR CO-ORDINATION	IK	NW	05.04.2019
01	PRELIMINARY	IK	NW	29.03.2019

Client
WESTERN SYDNEY PARKLANDS TRUST

NETTLETONTRIBE

This drawing and design remains the property of Henry & Hymas and may not be copied in whole or in part without the prior written approval of Henry & Hymas.

Level 5,
79 Victoria Avenue
Chatswood NSW 2067

Telephone
+61 2 9417 8400
Facsimile
+61 2 9417 8337
Email
email@hhconsult.com.au
Web
www.henryandhymas.com.au

henry&hymas

Project
LIGHT HORSE INTERCHANGE BUSINESS HUB
EASTERN CREEK, NSW (SSD9667)

Title
EXTERNAL WORKS PLAN
WALLGROVE ROAD

Drawn	Designed	Date
M.Stimova	L.Caha	FEB 2019
Checked	Approved	Scale @A1
N.Wetzlar	A.Francis	1:500

Drawing number
18652_SSDA_EX01

Revision
03

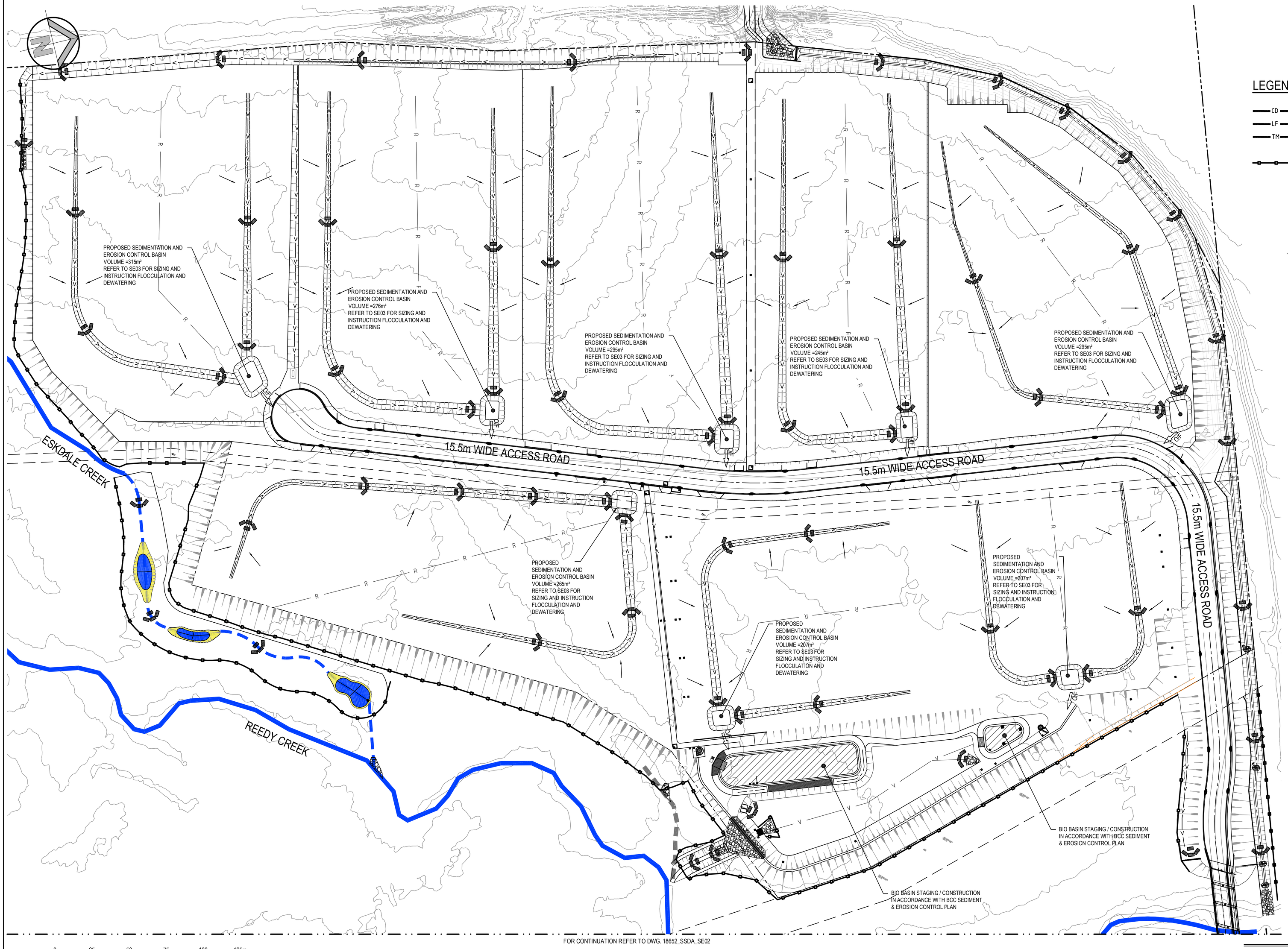

LEGEND

- CATCH DIVERSION DRAIN
- LOW FLOW DIVERSION DRAIN
- TRAFFIC MANOEUVRING
- OVERLAND FLOW PATH
- PROPOSED SEDIMENTATION FENCE
- PROPOSED VEHICLE SHAKER GRID
- PROPOSED STABILISED SITE ACCESS
- PROPOSED STOCKPILE LOCATION
- PROPOSED HAYBALE FILTER
- GEOTEXTILE INLET FILTER
- PROPOSED MESH & GRAVEL INLET FILTER

SEDIMENT & EROSION CONTROL NOTES

- ALL SEDIMENT CONTROL DEVICES ARE TO BE CONSTRUCTED, PLACED AND MAINTAINED IN ACCORDANCE WITH BLACKTOWN CITY COUNCIL SPECIFICATIONS AND LANDCOM'S "SOIL AND CONSTRUCTION" MANUAL.
- ALL PERIMETER & SILTATION CONTROL MEASURES ARE TO BE PLACED PRIOR TO, OR AS THE FIRST STEP IN EARTH WORKS AND/OR CLEARING.
- THE SEDIMENT & EROSION CONTROL PLAN MAY REQUIRE FUTURE ADJUSTMENT TO REFLECT CONSTRUCTION STAGING. IT IS ALSO THE CONTRACTORS RESPONSIBILITY TO PREPARE THEIR OWN SEDIMENT AND EROSION CONTROL PLAN WHICH SUITS THE DESIGNED CONSTRUCTION STAGING.
- FILTRATION BUFFER ZONES ARE TO BE FENCED OFF AND ACCESS PROHIBITED TO ALL PLANT AND MACHINERY.
- ALL TEMPORARY EARTH BERMS, DIVERSIONS & SILT DAM EMBANKMENTS ARE TO BE MACHINE COMPACTED, SEEDED & MULCHED FOR TEMPORARY VEGETATION COVER AS SOON AS THEY HAVE BEEN FORMED.
- ALL SEDIMENT TRAPPING STRUCTURES AND DEVICES ARE TO BE INSPECTED AFTER STORMS FOR STRUCTURAL DAMAGE OR CLOGGING. TRAPPED MATERIAL IS TO BE REMOVED TO A SAFE LOCATION.
- ALL TOPSOIL IS TO BE STOCKPILED ON SITE FOR REUSE (AWAY FROM TREES AND DRAINAGE LINES). MEASURES SHALL BE APPLIED TO PREVENT EROSION OF THE STOCKPILES.
- ALL EARTHWORK AREAS SHALL BE ROLLED EACH EVENING TO SEAL THE EARTHWORKS.
- ALL FILLS ARE TO BE LEFT WITH A LIP AT THE TOP OF THE SLOPE AT THE END. ALL CUT AND FILL SLOPES ARE TO BE SEEDED AND STRAW MULCHED WITHIN 14 DAYS OF COMPLETION OF FORMATION U.N.O. BY LANDSCAPE ARCHITECTS.
- UPON COMPLETION OF ALL EARTHWORKS OR AS DIRECTED BY COUNCIL SOIL CONSERVATION TREATMENTS SHALL BE APPLIED SO AS TO RENDER AREAS THAT HAVE BEEN DISTURBED, EROSION PROOF WITHIN 14 DAYS.
- EROSION AND SILT PROTECTION MEASURES ARE TO BE MAINTAINED AT ALL TIMES.

NOTE:

- THE SEDIMENT AND EROSION MEASURES SHOWN ON THIS PLAN ARE FOR THE OVERALL SUBDIVISION EARTHWORKS STAGE AND ARE GENERAL IN NATURE.
  SPECIFIC DETAILS WILL NEED TO BE PROVIDED AT THE DA STAGE FOR EACH INDIVIDUAL PAD.
- ENSURE ALL GRATED PITS ARE PROTECTED WITH MESH AND GRAVEL INLET FILTERS.

FOR CONTINUATION REFER TO DWG. 18652_SSDA_SE02

0 25 50 75 100 125m
25 15 5
SCALE 1:1250

SEDIMENT AND EROSION CONTROL PLAN

SCALE 1:1250

ISSUED FOR APPROVAL

REVISION	AMENDMENT	DRAWN	DESIGNED	DATE
03	ISSUED FOR APPROVAL	MS	NW	09.04.2019
02	ISSUED FOR CO-ORDINATION	IK	NW	05.04.2019
01	ISSUED PRELIMINARY	IK	NW	29.03.2019

Client: WESTERN SYDNEY PARKLANDS TRUST

NETTLETONTRIBE

This drawing and design remains the property of Henry & Hymas and may not be copied in whole or in part without the prior written approval of Henry & Hymas.

Level 5,
79 Victoria Avenue
Chatswood NSW 2067

Telephone +61 2 9417 8400
Facsimile +61 2 9417 8337
Email email@hhconsult.com.au
Web www.henryandhymas.com.au

henry&hymas

Project: LIGHT HORSE INTERCHANGE BUSINESS HUB
EASTERN CREEK, NSW (SSD9667)

Title: SEDIMENT AND EROSION CONTROL PLAN
SHEET 1 OF 2

Drawn	Designed	Date
M.Stimova	L.Caha	FEB 2019
Checked	Approved	Scale @A1
N.Wetzlar	A.Francis	1:1250

Drawing number: 18652_SSDA_SE01

Revision: 03

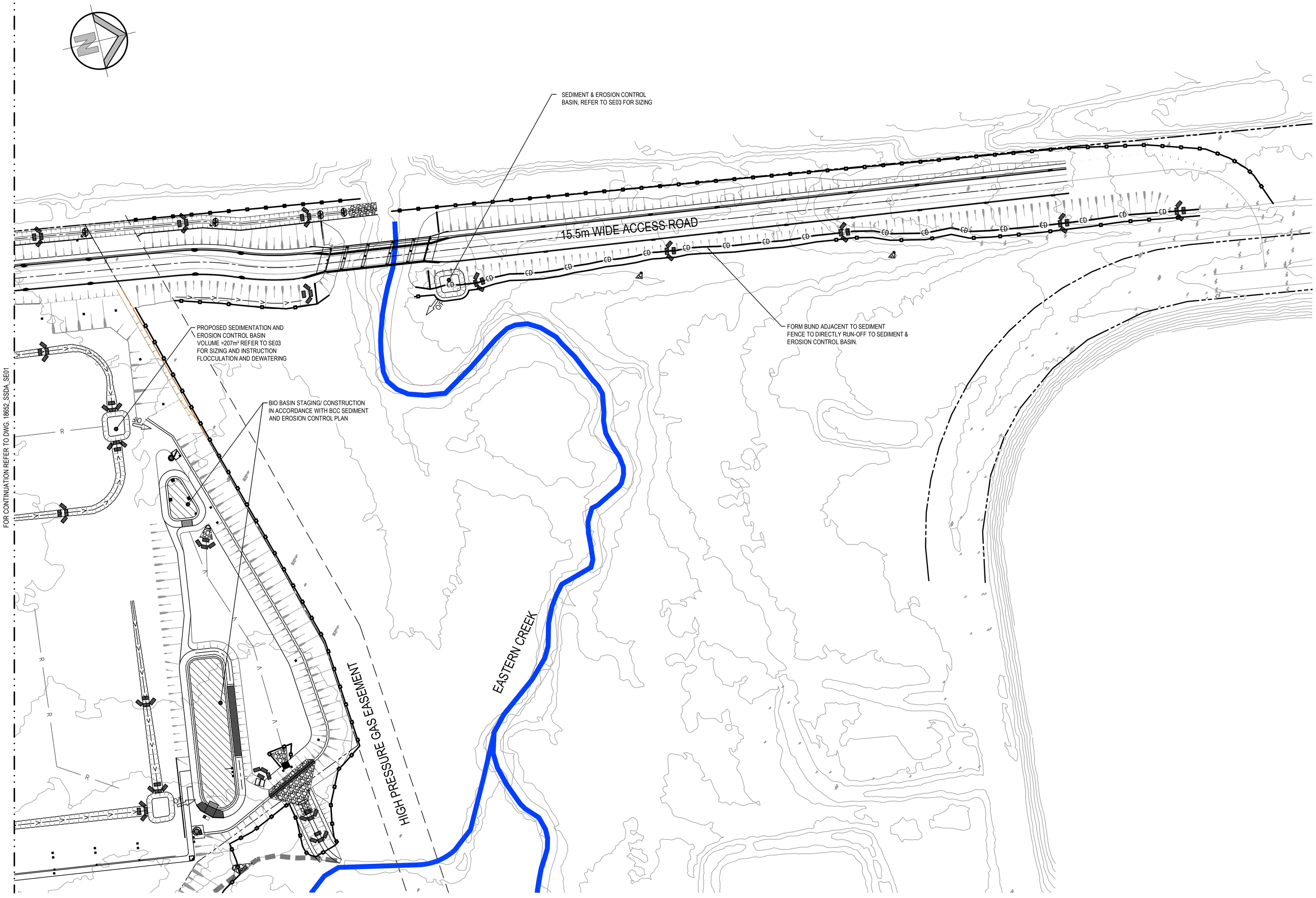

LEGEND

- CATCH DIVERSION DRAIN
- LOW FLOW DIVERSION DRAIN
- TRAFFIC MANOEUVRING
- OVERLAND FLOW PATH
- PROPOSED SEDIMENTATION FENCE
- PROPOSED VEHICLE SHAKER GRID
- PROPOSED STABILISED SITE ACCESS
- PROPOSED STOCKPILE LOCATION
- PROPOSED HAYBALE FILTER
- GEOTEXTILE INLET FILTER
- PROPOSED MESH & GRAVEL INLET FILTER

SEDIMENT & EROSION CONTROL NOTES

- ALL SEDIMENT CONTROL DEVICES ARE TO BE CONSTRUCTED, PLACED AND MAINTAINED IN ACCORDANCE WITH BLACKTOWN CITY COUNCIL SPECIFICATIONS AND LANDCOM'S "SOIL AND CONSTRUCTION" MANUAL.
- ALL PERIMETER & SILTATION CONTROL MEASURES ARE TO BE PLACED PRIOR TO, OR AS THE FIRST STEP IN EARTH WORKS AND/OR CLEARING.
- THE SEDIMENT & EROSION CONTROL PLAN MAY REQUIRE FUTURE ADJUSTMENT TO REFLECT CONSTRUCTION STAGING. IT IS ALSO THE CONTRACTORS RESPONSIBILTY TO PREPARE THEIR OWN SEDIMENT AND EROSION CONTROL PLAN WHICH SUITS THE DESIGNED CONSTRUCTION STAGING.
- FILTRATION BUFFER ZONES ARE TO BE FENCED OFF AND ACCESS PROHIBITED TO ALL PLANT AND MACHINERY.
- ALL TEMPORARY EARTH BERMS, DIVERSIONS & SILT DAM EMBANKMENTS ARE TO BE MACHINE COMPACTED, SEEDED & MULCHED FOR TEMPORARY VEGETATION COVER AS SOON AS THEY HAVE BEEN FORMED.
- ALL SEDIMENT TRAPPING STRUCTURES AND DEVICES ARE TO BE INSPECTED AFTER STORMS FOR STRUCTURAL DAMAGE OR CLOGGING. TRAPPED MATERIAL IS TO BE REMOVED TO A SAFE LOCATION.
- ALL TOPSOIL IS TO BE STOCKPILED ON SITE FOR REUSE (AWAY FROM TREES AND DRAINAGE LINES). MEASURES SHALL BE APPLIED TO PREVENT EROSION OF THE STOCKPILES.
- ALL EARTHWORK AREAS SHALL BE ROLLED EACH EVENING TO SEAL THE EARTHWORKS.
- ALL FILLS ARE TO BE LEFT WITH A LIP AT THE TOP OF THE SLOPE AT THE END. ALL CUT AND FILL SLOPES ARE TO BE SEEDED AND STRAW MULCHED WITHIN 14 DAYS OF COMPLETION OF FORMATION U.N.O. BY LANDSCAPE ARCHITECTS.
- UPON COMPLETION OF ALL EARTHWORKS OR AS DIRECTED BY COUNCIL SOIL CONSERVATION TREATMENTS SHALL BE APPLIED SO AS TO RENDER AREAS THAT HAVE BEEN DISTURBED, EROSION PROOF WITHIN 14 DAYS.
- EROSION AND SILT PROTECTION MEASURES ARE TO BE MAINTAINED AT ALL TIMES.

NOTE:

- THE SEDIMENT AND EROSION MEASURES SHOWN ON THIS PLAN ARE FOR THE OVERALL SUBDIVISION EARTHWORKS STAGE AND ARE GENERAL IN NATURE.
  SPECIFIC DETAILS WILL NEED TO BE PROVIDED AT THE DA STAGE FOR EACH INDIVIDUAL PAD.
- ENSURE ALL GRATED PITS ARE PROTECTED WITH MESH AND GRAVEL INLET FILTERS.

SEDIMENT AND EROSION CONTROL PLAN

SCALE 1:1250

0 25 50 75 100 125m

25 15 5

SCALE 1:1250

ISSUED FOR APPROVAL

REVISION	AMENDMENT	DRAWN	DESIGNED	DATE
03	ISSUED FOR APPROVAL	MS	NW	09.04.2019
02	ISSUED FOR CO-ORDINATION	IK	NW	05.04.2019
01	ISSUED PRELIMINARY	IK	NW	29.03.2019

Client: WESTERN SYDNEY PARKLANDS TRUST

NETTLETONTRIBE

This drawing and design remains the property of Henry & Hymas and may not be copied in whole or in part without the prior written approval of Henry & Hymas.

Level 5,
79 Victoria Avenue
Chatswood NSW 2067

Telephone +61 2 9417 8400
Facsimile +61 2 9417 8337
Email email@hhconsult.com.au
Web www.henryandhymas.com.au

henry&hymas

Project: LIGHT HORSE INTERCHANGE BUSINESS HUB
EASTERN CREEK, NSW (SSD9667)

Title: SEDIMENT AND EROSION CONTROL PLAN
SHEET 2 OF 2

Drawn	Designed	Date
M.Stimova	L.Caha	FEB 2019
Checked	Approved	Scale @A1
N.Wetzlar	A.Francis	1:1250

Drawing number: 18652_SSDA_SE02

Revision: 03

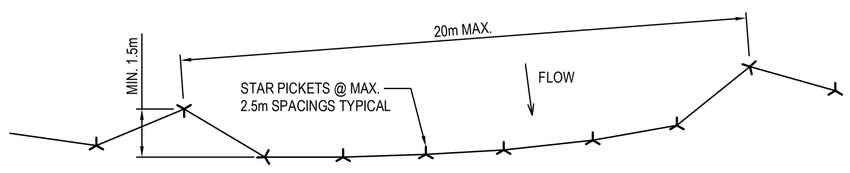

PLAN

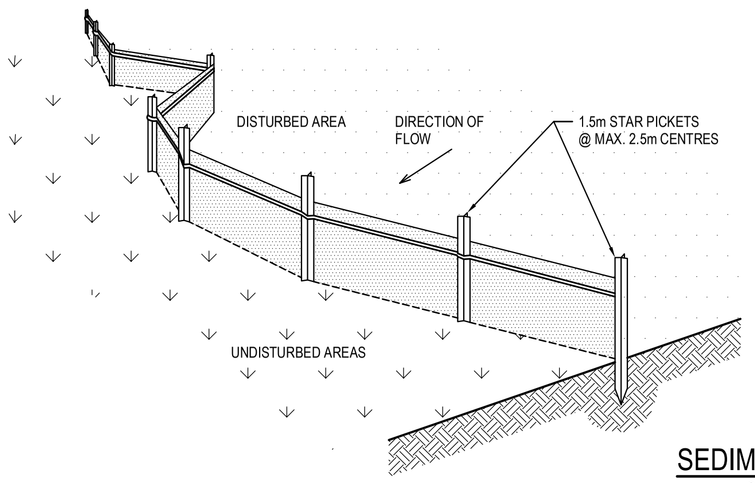

SEDIMENT FENCE

SCALE N.T.S.

SEDIMENT FENCE CONSTRUCTION NOTES:

1. CONSTRUCT SEDIMENT FENCES AS CLOSE AS POSSIBLE TO BEING PARALLEL TO THE CONTOURS OF THE SITE, BUT WITH SMALL RETURNS AS SHOWN IN THE DRAWING TO LIMIT THE CATCHMENT AREA OF ANY ONE SECTION. THE CATCHMENT AREA SHOULD BE SMALL ENOUGH TO LIMIT WATER FLOW IF CONCENTRATED AT ONE POINT TO 50 LITRES PER SECOND IN THE DESIGN STORM EVENT, USUALLY THE 10-YEAR EVENT.
2. CUT A 150mm DEEP TRENCH ALONG THE UPSLOPE LINE OF THE FENCE FOR THE BOTTOM OF THE FABRIC TO BE ENTRENCHED.
3. 3. DRIVE 1.5m LONG STAR PICKETS INTO GROUND @ 2.5m INTERVALS (MAX.) AT THE DOWNSLOPE EDGE OF THE TRENCH. ENSURE ANY STAR PICKETS ARE FITTED WITH SAFETY CAPS.
4. 4. FIX SELF-SUPPORTING GEOTEXTILE TO THE UPSLOPE SIDE OF THE POSTS ENSURING IT GOES TO THE BASE OF THE TRENCH. FIX THE GEOTEXTILE WITH WIRE TIES OR AS RECOMMENDED BY THE MANUFACTURER. ONLY USE GEOTEXTILE SPECIFICALLY PRODUCED FOR SEDIMENT FENCING. THE USE OF SHADE CLOTH FOR THIS PURPOSE IS NOT SATISFACTORY.
5. 5. JOIN SECTIONS OF FABRIC AT A SUPPORT POST WITH A 150mm OVERLAP. 6. BACKFILL THE TRENCH OVER THE BASE OF THE FABRIC AND COMPACT IT THOROUGHLY OVER THE GEOTEXTILE.

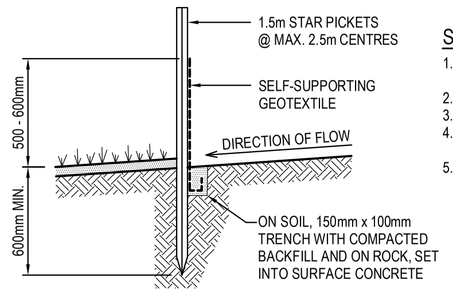

SECTION DETAIL

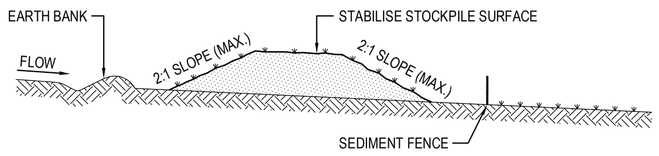

STOCKPILE CONSTRUCTION NOTES:

1. PLACE STOCKPILES MORE THAN 2 (PREFERABLY 5) METRES FROM EXISTING VEGETATION, CONCENTRATED WATER FLOW, ROADS AND HAZARD AREAS.
2. CONSTRUCT ON THE CONTOUR AS LOW, FLAT, ELONGATED MOUNDS.
3. WHERE THERE IS SUFFICIENT AREA, TOPSOIL STOCKPILES SHALL BE LESS THAN 2 METRES IN HEIGHT.
4. WHERE THEY ARE TO BE PLACED FOR MORE THAN 10 DAYS, STABILISE FOLLOWING THE APPROVED E.S.C.P. OR S.W.M.P. TO REDUCE THE C-FACTOR TO LESS THAN 0.10.
5. CONSTRUCT EARTH BANKS ON THE UPSLOPE SIDE TO DIVERT WATER AROUND STOCKPILES AND SEDIMENT FENCES 1 TO 2 METRES DOWNSLOPE.

STOCKPILES

SCALE N.T.S.

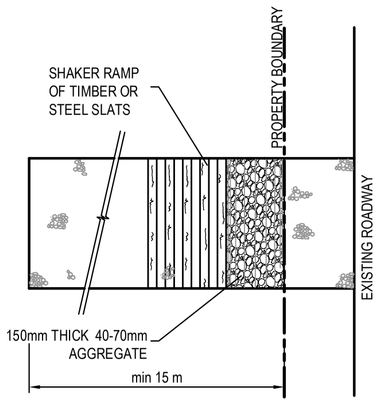

PLAN

STABILISED SITE ACCESS WITH SHAKER RAMP

N.T.S.

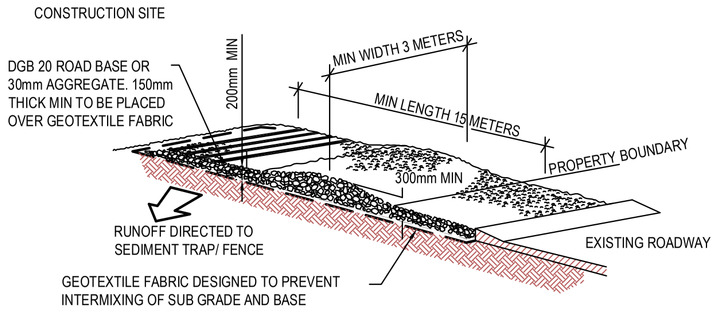

STABILISED SITE ACCESS WITH SHAKER RAMP

N.T.S.

NOTES:

1. THIS DEVICE IS TO BE LOCATED AT ALL EXITS FROM CONSTRUCTION SITE.
2. THIS DEVICE IS TO BE REGULARLY CLEANED OF DEPOSITED MATERIAL SO AS TO MAINTAIN A 50mm DEEP SPACE BETWEEN PLANKS.
3. ANY UNSEALED ROAD BETWEEN THIS DEVICE AND NEAREST ROADWAY IS TO BE TOPPED WITH 100mm THICK 40-70mm SIZE AGGREGATE.
4. ALTERNATIVELY, THREE(3) PRECAST CONCRETE CATTLE GRIDS (AS MANUFACTURED BY *HUMES CONCRETE MAY BE USED. 1, 2 & 3 ABOVE ALSO APPLY.

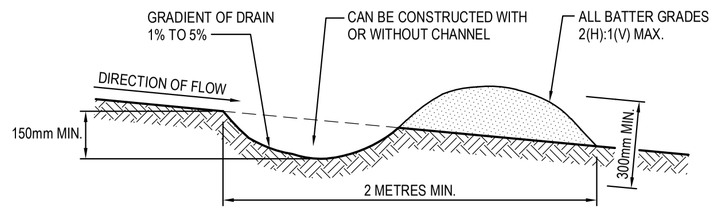

NOTE: ONLY TO BE USED AS TEMPORARY BANK WHERE MAXIMUM UPSLOPE LENGTH IS 80 METRES.

EARTH BANK CONSTRUCTION NOTES:

1. BUILD WITH GRADIENTS BETWEEN 1% AND 5%.
2. AVOID REMOVING TREES AND SHRUBS IF POSSIBLE - WORK AROUND THEM.
3. ENSURE THE STRUCTURES ARE FREE OF PROJECTIONS OR OTHER IRREGULARITIES THAT COULD IMPEDE WATER FLOW.
4. BUILD THE DRAINS WITH CIRCULAR, PARABOLIC OR TRAPEZOIDAL CROSS-SECTIONS, NOT "V" SHAPED.
5. ENSURE BANKS ARE PROPERLY COMPACTED TO PREVENT FAILURE.
6. COMPLETE PERMANENT OR TEMPORARY STABILISATION WITHIN 10 DAYS OF CONSTRUCTION.

EARTH BANK (LOW FLOW)

SCALE N.T.S.

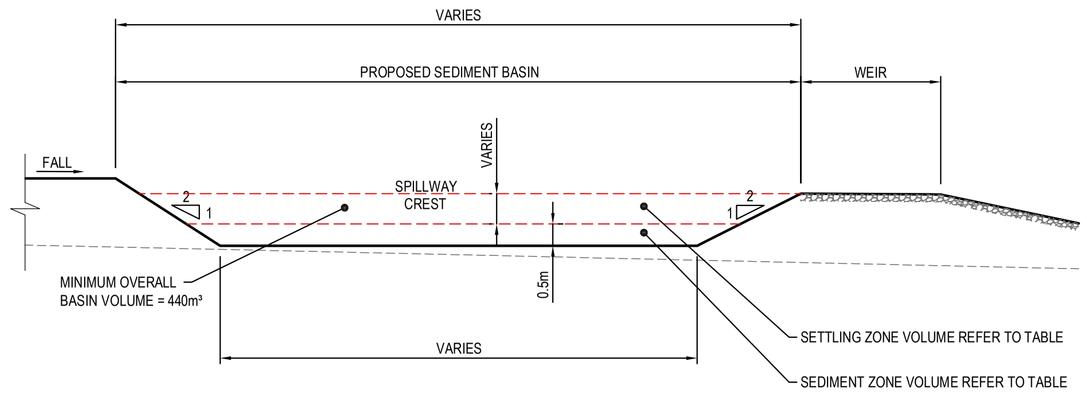

TYPICAL SECTION

SEDIMENTATION BASIN

N.T.S.

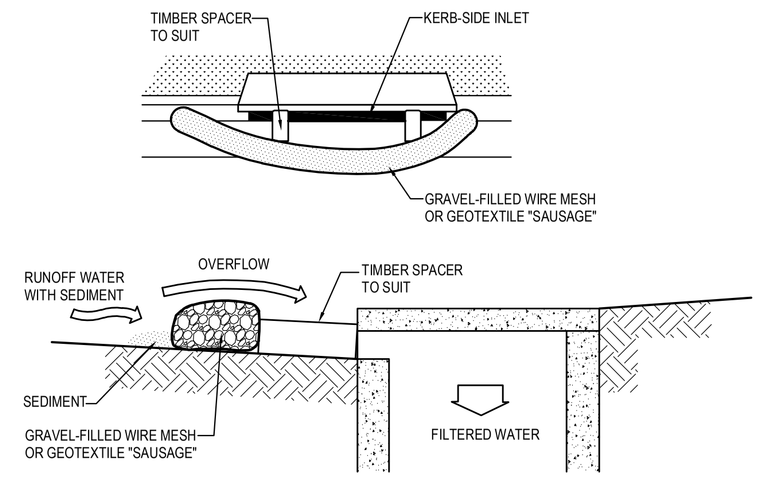

MESH & GRAVEL INLET FILTER CONSTRUCTION NOTES:

1. FABRICATE A SLEEVE MADE FROM GEOTEXTILE OR WIRE MESH LONGER THAN THE LENGTH OF THE INLET PIT AND FILL IT WITH 25mm TO 50mm GRAVEL.
2. FORM AN ELLIPTICAL CROSS-SECTION ABOUT 150mm HIGH x 400mm WIDE.
3. PLACE THE FILTER AT THE OPENING LEAVING AT LEAST A 100mm SPACE BETWEEN IT AND THE KERB INLET. MAINTAIN THE OPENING WITH SPACER BLOCKS.
4. FORM A SEAL WITH THE KERB TO PREVENT SEDIMENT BYPASSING THE FILTER.
5. SANDBAGS FILLED WITH GRAVEL CAN SUBSTITUTE FOR THE MESH OR GEOTEXTILE PROVIDING THEY ARE PLACED SO THAT THEY CAN FIRMLY ABUT EACH OTHER AND SEDIMENT / LADEN WATERS CANNOT PASS BETWEEN.

MESH & GRAVEL INLET FILTER

SCALE N.T.S.

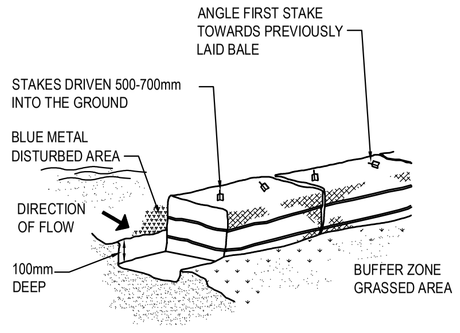

HAYBALE BARRIERS

N.T.S.

CONSTRUCTION SEQUENCE

WORKS SHALL BE UNDERTAKEN IN THE FOLLOWING SEQUENCE:

1. INSTALL SEDIMENT FENCING AND CUT DRAINS TO MEET THE REQUIREMENTS OF THE SEDIMENT AND EROSION CONTROL PLAN. WASTE COLLECTION BINS SHALL BE INSTALLED ADJACENT TO SITE OFFICE.
2. CONSTRUCT STABILISED SITE ACCESS IN ACCORDANCE WITH BLACKTOWN CITY COUNCIL'S REQUIREMENTS.
3. REDIRECT CLEAN WATER AROUND THE CONSTRUCTION SITE.
4. INSTALL SEDIMENT CONTROL PROTECTION MEASURES AT ALL NATURAL AND MAN-MADE DRAINAGE STRUCTURES. MAINTAIN UNTIL ALL THE DISTURBED AREAS ARE STABILISED.
5. CLEAR AND STRIP THE WORK AREAS. MINIMISE THE DAMAGE TO THE GRASS AND LOW GROUND COVER OF NON-DISTURBED AREAS.
6. ANY DISTURBED AREAS, OTHER THAN BUILDING PAD AREAS, SHALL IMMEDIATELY BE COVERED WITH SITE TOPSOIL WITHIN 7 DAYS OF CLEARING. BUILDING PAD AREAS SHALL BE COVERED WITH BITUMEN EMULSION AS SPECIFIED.
7. APPLY PERMANENT STABILISATION TO SITE (LANDSCAPING).

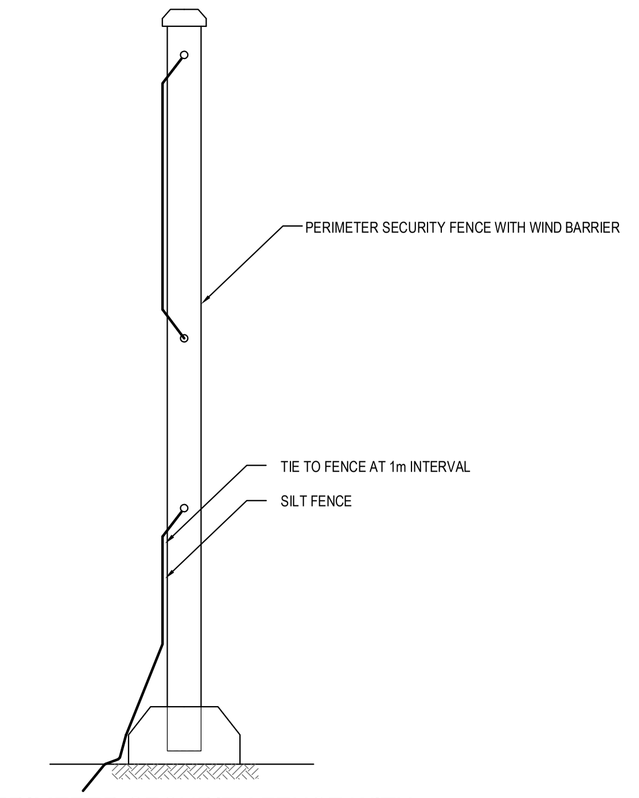

PERIMETER SECURITY FENCE WITH WIND BARRIER & SILT FENCE

N.T.S.

SEDIMENT BASIN SIZING

1. THE SEDIMENT BASIN SHALL BE CONSTRUCTED ON A RATE PER HECTARE BASIS AND HAS BEEN IN ACCORDANCE WITH THE REQUIREMENTS OF THE LANDCOM MANUAL "MANAGING URBAN STORMWATER - SOILS AND CONSTRUCTION", FOR SEDIMENTATION **TYPE D** SOILS. THE DISTURBED AREA WITHIN THIS CATCHMENT AT ANY ONE TIME SHOULD BE LIMITED TO AN AREA FOR WHICH EACH SEDIMENT BASIN CAN HANDLE. EACH BASIN SHALL BE SIZED IN ACCORDANCE WITH THE TABLE BELOW.

SEDIMENT BASIN SIZING TYPE D SOILS	
VOLUMETRIC RUNOFF COEFFICIENT, CV	0.25 (APPENDIX F - TABLE F2)
85TH PERCENTILE 5 DAY TOTAL RAINFALL DEPTH, R	32.2 mm
CATCHMENT AREA, A	1 Ha (UNIT AREA)
SETTLING ZONE VOLUME (PER HECTARE) 10 CV A R	80.5 m³
DISTURBED CATCHMENT AREA	1 Ha (UNIT AREA)
R K LS P C	110.87m³
SEDIMENT ZONE VOLUME (0.17 A (R K LS P C)/1.3	14.5m³ < 50% SETTLING VOL
TOTAL SEDIMENT BASIN VOLUME REQUIRED :	120.75 m³/Ha

* (LANDCOM MANAGING URBAN STORMWATER MANUAL REFERENCE)

2. THE FOLLOWING DESIGN PARAMETERS HAVE BEEN ASSESSED FOR THE SITE:

CONSTRAINT	VALUE	(SOURCE)*
RAINFALL EROSIVITY (R-FACTOR)	2350	APPENDIX B
LENGTH/SLOPE GRADIENT FACTOR, LS	0.955	APPENDIX A - TABLE A1
SOIL ERODIBILITY (K-FACTOR)	0.038	(TABLE C20 - BLACKTOWN)
EROSION CONTROL PRACTICE FACTOR (P-FACTOR)	1.3 (COMPACTED)	APPENDIX A - TABLE A2
COVER FACTOR (C-FACTOR)	1.0 (DURING EARTHWORKS)	APPENDIX A - FIGURE A5
CALCULATED SOIL LOSS, A (RUSLE EQUATION)	110.87t/Ha/YR	A = R K LS P C
SOIL HYDROLOGIC GROUP	GROUP C	APPENDIX C TABLE 20
SEDIMENT TYPE	TYPE D	APPENDIX C TABLE 4
85TH PERCENTILE 5-DAY RAINFALL EVENT	32.2mm (BLACKTOWN)	TABLE 6.3A

* (LANDCOM MANAGING URBAN STORMWATER MANUAL REFERENCE)

BASIN MANAGEMENT

1. THE CAPTURED STORMWATER IN THE SETTLING ZONE SHOULD BE DRAINED TO MEET THE MINIMUM STORAGE CAPACITY REQUIRED WITHIN A FIVE (5) DAY PERIOD FOLLOWING RAINFALL, PROVIDED THE ACCEPTABLE WATER QUALITY (NFR) AND TURBIDITY HAVE BEEN ACHIEVED.
2. CHEMICAL FLOCCULENT SUCH AS GYPSUM MAY BE DOSED TO AID SETTLING WITHIN 24 HOURS OF CONCLUSION OF EACH STORM. THE APPLIED DOSING RATES SHOULD ACHIEVE THE TARGET QUALITY WITHIN 36 TO 72 HOURS OF THE STORM EVENT.
3. INSPECT THE SEDIMENT BASINS AFTER EACH RAINFALL EVENT AND/OR WEEKLY. ENSURE THAT ALL SEDIMENT IS REMOVED ONCE THE SEDIMENT STORAGE ZONE IS FULL (REFER TO PEGS INSTALLED IN BASINS IN ACCORDANCE WITH THE SWMP). ENSURE THAT OUTLET AND EMERGENCY SPILLWAY WORKS ARE MAINTAINED IN A FULLY OPERATIONAL CONDITION AT ALL TIMES.

SOWING SEASON	SEED MIX
AUTUMN/WINTER	OATS@40KG/Ha + JAPANESE MILLET@10kg/Ha
SPRING/SUMMER	OATS@20kg/Ha + JAPANESE MILLET@20kg/Ha

NOTE : THESE PLANT SPECIES ARE FOR TEMPORARY REVEGETATION ONLY. THEY WILL ONLY PROVIDE PROTECTION FROM EROSION FOR SIX MONTHS. WHERE THE PADS ARE TO BE LEFT UNDEVELOPED FOR A LONGER PERIOD, THE CONTRACTOR SHALL SEEK ADVICE FROM THE SITE SUPERINTENDENT AS TO MORE APPROPRIATE REVEGETATION METHODS.

REVEGETATION IN ACCORDANCE WITH THE ABOVE TABLE WILL BE ENHANCED BY ADDING LIME AT A RATE OF 4kg/TONNE OF TOPSOIL AND 7.5kg/TONNE OF SUBSOIL.

4. THE LONG TERM GROUND COVER FACTORS FOR THE CONSTRUCTION WORKS IS NOT TO EXCEED THE FOLLOWING LIMITS:

LAND	MAXIMUM C-FACTOR	REMARKS
WATERWAYS AND OTHER AREAS OF CONCENTRATED FLOWS, POST CONSTRUCTION	0.05	APPLIES AFTER TEN WORKING DAYS OF COMPLETION OF FORMATION AND BEFORE CONCENTRATED FLOWS ARE APPLIED. FOOT AND VEHICULAR TRAFFIC IS PROHIBITED IN THIS AREA AND 70% GROUND COVER IS REQUIRED.
STOCKPILES, POST CONSTRUCTION	0.10	APPLIES AFTER TEN WORKING DAYS FROM COMPLETION OF FORMATION. 60% GROUND COVER IS REQUIRED.
ALL LANDS, INCLUDING WATERWAYS AND STOCKPILES, DURING CONSTRUCTION.	0.15	APPLIES AFTER 20 DAYS OF INACTIVITY, EVEN THOUGH WORKS MAY BE INCOMPLETE. 50% GROUND COVER IS REQUIRED.

ISSUED FOR APPROVAL

REVISION	AMENDMENT	DRAWN	DESIGNED	DATE
03	ISSUED FOR APPROVAL	MS	NW	09.04.2019
02	ISSUED FOR CO-ORDINATION	IK	NW	05.04.2019
01	PRELIMINARY	IK	NW	29.03.2019

Client: WESTERN SYDNEY PARKLANDS TRUST

NETTLETONTRIBE

This drawing and design remains the property of Henry & Hymas and may not be copied in whole or in part without the prior written approval of Henry & Hymas.

Level 5,
79 Victoria Avenue
Chatswood NSW 2067

Telephone +61 2 9417 8400
Facsimile +61 2 9417 8337
Email email@hhconsult.com.au
Web www.henryandhymas.com.au

henry&hymas

Project: LIGHT HORSE INTERCHANGE BUSINESS HUB
EASTERN CREEK, NSW (SSD9667)

Title: SEDIMENT AND EROSION CONTROL
TYPICAL SECTIONS AND DETAILS

Drawn	Designed	Date
M.Stimova	L.Caha	FEB 2019
Checked	Approved	Scale @A1
N.Wetzlar	A.Francis	N.T.S.

Drawing number: 18652_SSDA_SE03

Revision: 03

DEVELOPMENT DATA	
OVERALL SITE AREA	336,285m²
LOT 8 (RESIDUAL) - ESTATE BIO-BASIN/OSD	21,511m²
ACCESS ROAD RESERVE	21,137m²
TOTAL DEVELOPABLE AREA (LOT 1 TO 7)	293,637m²
TOTAL BUILDING AREA	165,500m²
FLOOR SPACE RATIO	56.4%

DEVELOPABLE LOT	W/H AREA	OFFICE AREA	TOTAL
LOT 1 SITE AREA (41,270m²)	19,000	1,000	20,000
LOT 2 SITE AREA (34,141m²)	16,900	800	17,700
LOT 3 SITE AREA (41,112m²)	23,200	1,200	24,400
LOT 4 SITE AREA (38,686m²)	21,400	1,000	22,400
LOT 5 SITE AREA (44,193m²)	24,700	1,300	26,000
LOT 6 SITE AREA (38,406m²)	20,000	1,000	21,000
LOT 7 SITE AREA (55,829m²)	32,400	1,600	34,000
TOTAL	157,600	7,900	165,500

CARPARK PROVISIONS	
TOTAL CARPARK REQUIRED RMS - Warehouse: 1 space/300sqm Office: 1 space/40sqm	723 spaces
TOTAL CARPARK PROVIDED	782 spaces



Client

NSW GOVERNMENT Western Sydney Parklands Trust

Light Horse Interchange Business Hub
Eastern Creek NSW [SSD 9667]

Concept Masterplan

1:3000@ A3 or 1:1500@A1

DATE April, 2019 **DRAWING NUMBER** 10935_MP100[P2]

nettletontribe

Apr 08, 2019 - 8:33am N:\10935-Lighthorse Interchange\2 Arch\CAD\10935_MP100.dwg

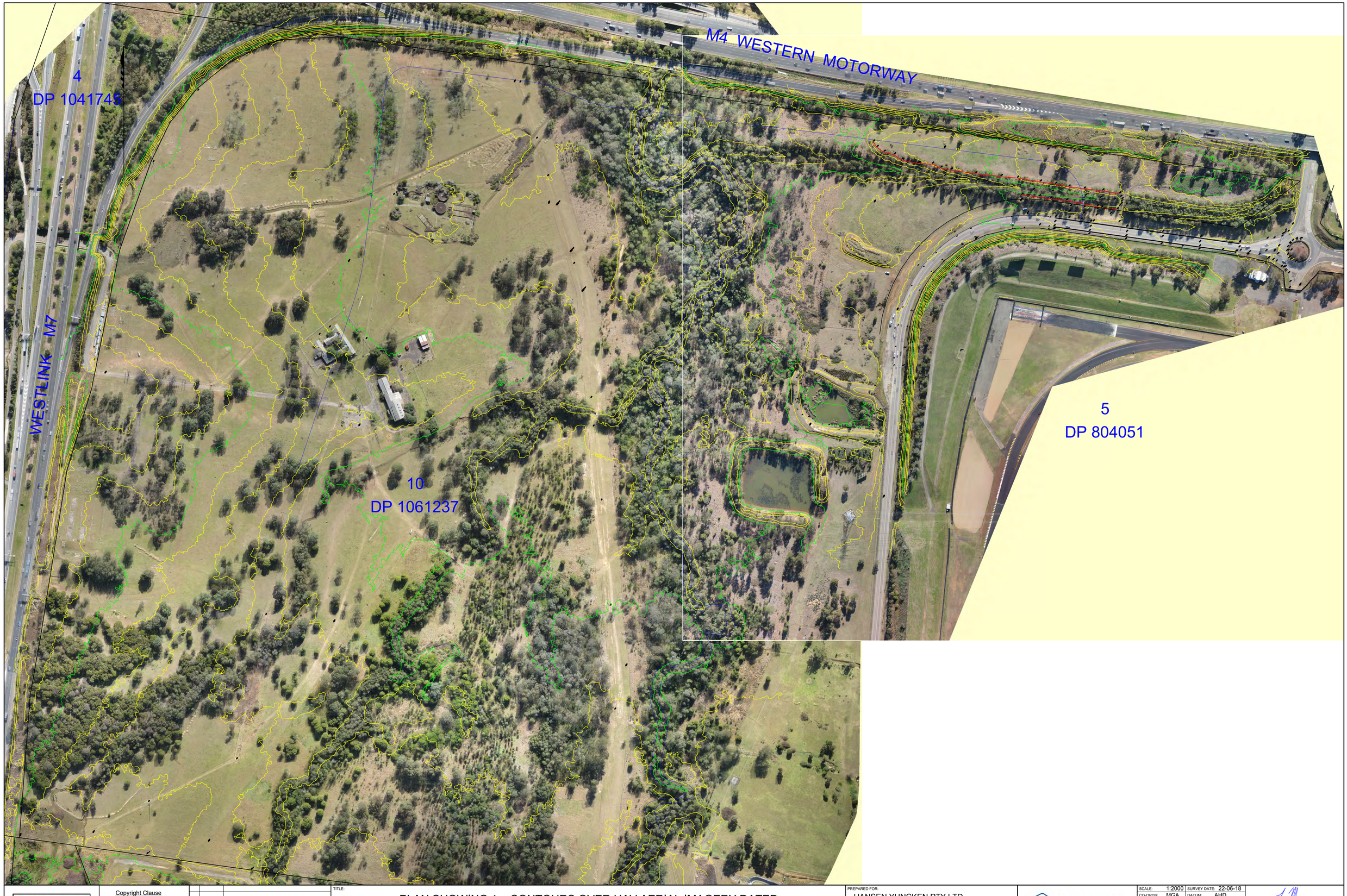

www.dialbeforeyoudig.com.au
DIAL 1100 BEFORE YOU DIG

Copyright Clause

This drawing and/or design is the property of Boxall Surveyors Pty. Ltd. and should not be reproduced either in part or whole without written consent of that company.

Rev.	DATE	REVISION DETAILS
A	13-07-2018	ORIGINAL ISSUE

TITLE:

PLAN SHOWING 1m CONTOURS OVER UAV AERIAL IMAGERY DATED 2 AUGUST 2017 (WEST SIDE) AND 22 JUNE 2018 (EAST SIDE) TOGETHER WITH GROUND SURVEYED DATA

PREPARED FOR:
HANSEN YUNCKEN PTY LTD

ADDRESS:
LIGHTHORSE BUSINESS HUB
165 WALLGROVE ROAD
EASTERN CREEK

boxall
PO Box 519 Sutherland NSW 1499 | Suite 8/49-51 Eton Street
02 9521 5737 | www.boxallsurveyors.com.au | ACN 114 644 058
Liability limited by a scheme approved under Professional Standards Legislation

SCALE:	1:2000	SURVEY DATE:	22-06-18
CO-ORDS:	MGA	DATUM:	AHD
ORIGIN OF LEVELS:	GPS RTK		
SURVEY:	SL + MA	DRAWN:	SM
CHECKED:	SM	DATE:	13-07-18
APPROVED:	SM	DATE:	13-07-18
JOB REF:	10568	SHEET	1 OF 1 SHEETS

SCOTT MURRAY
REGISTERED SURVEYOR

DRAWING No.: 10568-003
REVISION: A
A1

APPENDIX D: VENM CERTIFICATE FORM

Certification:
Virgin excavated natural material

1. I *[full name]*

   of *[organisation and address]*

   certify that the waste as set out in section 2 of this notice is Virgin Excavated Natural Material (VENM) as defined in Schedule 1 of the *Protection of the Environment Operations Act 1997*.

   This certification is made on behalf of the waste generator *[fill out if applicable]*

   being *[full name]*

   of *[organisation and address]*

2. The waste was generated at:

   Street address:

   Title reference (Lot/DP, etc.):

   The amount of waste (by volume or weight) is:

3. I have made the determination that the waste is VENM because:

   - ☐ I have assessed the historical and current land use of the site at which the waste was generated.
   - ☐ The waste is not contaminated with manufactured chemicals, or with process residues, as a result of industrial, commercial, mining or agricultural activities.
   - ☐ The waste does not contain any sulfidic ores or soils.
   - ☐ The waste does not contain any other waste.
   - ☐ The waste does not contain asbestos in any form.

Note: that all sections of this form must be completed including all boxes checked in Section 3 above and signed below for any material to be certified as VENM.

Signature(s) . . . . . .

Name(s) (printed)

Date

Warning: There are significant penalties under s.144AA of the *Protection of the Environment Operations Act 1997* for a person who supplies (whether knowingly or not) information that is false or misleading in a material respect about waste.

This certificate is intended to assist waste generators, contractors and/or receivers of VENM to have confidence that a range of relevant factors have been considered in the classification of a waste material as VENM.

Published by:
Environment Protection Authority, 59–61 Goulburn Street, Sydney South 1232
Ph: 131 555. TTY users: phone 133 677, then ask for 131 555
Speak and listen users: phone 1300 555 727, then ask for 131 555
Email: info@environment.nsw.gov.au; Web: www.epa.nsw.gov.au
Report pollution and environmental incidents: Environment Line: 131 555 (NSW only)
EPA 2013/0693; September 2013

APPENDIX E: SSROC FACT SHEETS

Diversion of Upslope Water

'Do it right on site' is a project to help the construction industry protect the environment and achieve the many benefits that come from doing so.

Diversion of Upslope Water What is it?

This refers to placing controls around the disturbed work area and on the road gutters above your site to divert rainwater from travelling through the work site

Why is it important?

Preventing water from above the site reaching the development area will ensure that it doesn't get contaminated and reduces the amount of water you need to deal with. This means less mud problems on site and less sediment being washed into the stormwater system. The environmental impact of sediment such as mud and dirt is significant. They smother animals and plants that live on the bottom of creek beds. They settle and make the creeks shallower. This results in the sun's rays heating the water. Many native plants and animals can not survive in this hotter water and die. Even though mud and dirt are natural they are still serious pollutants that must be prevented from entering our waterways.

Fact Sheet 1

What do I need to do?

Before building commences:

Look at the construction plans to identify areas on site where water can be diverted around the disturbed or active work area. Identify the relevant street gutters and drains up slope of the site. Decide on diversion methods and install them. Document these on your Soil and Water Management Plan and ensure that staff are aware of their importance.

Installing the controls:

Street Gutters: Install a gravel sausage or sand bag barrier downslope of the roadside gully pit that is immediately upslope of the worksite. Make the barrier big enough and sufficiently well attached to divert low and medium flows into the gully pit. Fashion a low point on the barrier, near the kerb, so that high flows spill to the gutter rather than flood the roadway.

Two or three of these traps in a row may be required to allow sediment to drop out. Place safety cones around the area so that cars do not damage them.

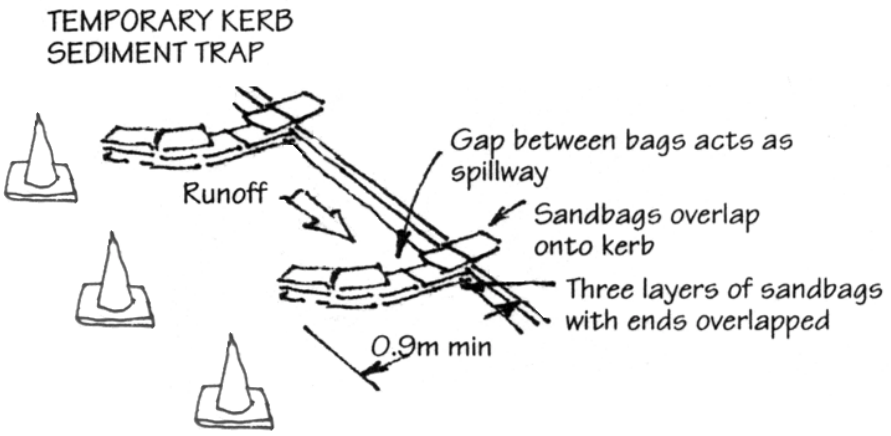

On Site: Construct a bund, graded to one end so that clean water flows around your work site without making contact with your construction activities. It can then flow safely to council stormwater drains without any need for pollution control. This bund can be made from soil stabilised with grass, sand bags or 'continuous berm'. Avoid directing stormwater towards the site's entry/exit point as this makes controlling tracking of mud on vehicle wheels more difficult. Also ensure water is not diverted into adjoining properties as this may cause damage and result in a civil lawsuit.

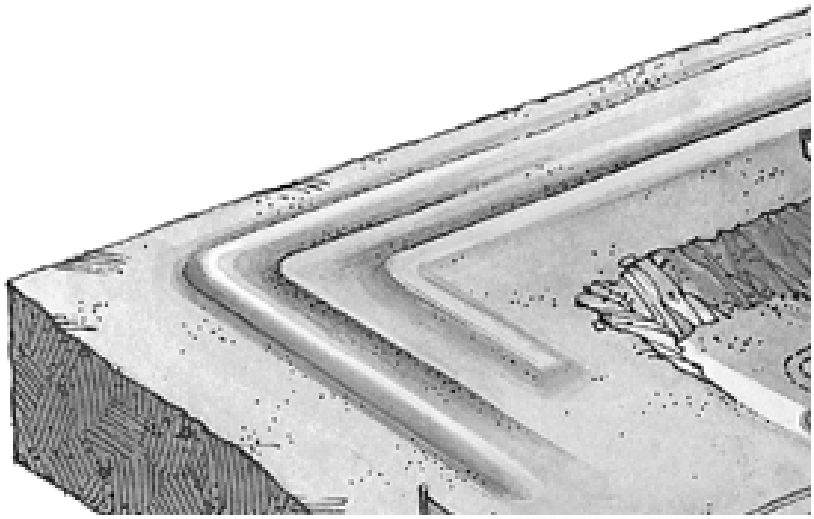

Maintenance of the controls:

Check that controls are in place at the end of the day's operations and when ever rain is forecast. Check diversion channels and bunds for erosion. Ideally they should be lined with geotextile material to ensure that they do not erode.

Remember:

Everyone has a responsibility to protect the environment. The site supervisor is required to make sure that all workers, including sub-contractors are doing the right thing and all workers are required to notify their supervisors and Council if they see pollution occurring.

It is illegal for any substance other than rainwater to enter the stormwater system. If you do have an accident and pollution occurs you are required by law to notify the Council so that they can work with you to minimise any harm to the environment.

Penalties for polluting the stormwater system range from $750 on the spot fines to $1 million and seven years in gaol. Both companies and individuals can be fined.

Council Officers and the EPA enforce the environmental legislation and do routine inspections of building sites. They can issue notices to make companies clean up sites, change the way they are managing the sites and if necessary, cease work. They will attempt to work with you but penalties will be issued if a satisfactory environmental outcome is not achieved.

List of fact sheets available from Council:

1. **Diversion of Upslope Water**
2. Dust Control
3. Early installation of Roof Drainage
4. Excavation Pump Out
5. Protected Concrete, Brick and Tile Cutting
6. Protected Concrete Delivery
7. Protected Service Trenches
8. Protected Stockpiles
9. Protected Wash Areas
10. Protected Waste Management and Chemical Storage
11. Protecting Vegetation
12. Protection of Gutter and Street Stormwater Drains
13. Protection of Site Stormwater Pits
14. Sediment Controls
15. Soil and Water Management Plans
16. Stabilised Site Access

For further information on preventing pollution from building and construction sites contact your local council:

'Do it right on site' is funded by the Natural Heritage Trust and the Southern Sydney Regional Organisation of Councils – Bankstown, Botany Bay, Canterbury, Hurstville, Kogarah, Marrickville, Randwick, Rockdale, South Sydney, Sutherland Shire, Waverley and Woollahra.

THE DRAIN IS JUST FOR RAIN

Southern Sydney Regional Organisation of Councils

Dust Control

'Do it right on site' is a project to help the construction industry protect the environment and achieve the many benefits that come from doing so.

Dust Control

What is it?

Dust control refers to minimising the amount of dust that enters the air and stormwater system from your site.

Why is it important?

Dust blowing from your site has a four way impact. Firstly, it is a nuisance to neighbours which can result in poor relations or complaints about your company.

Secondly, it can result in adverse health effects like asthma in workers and others. Thirdly, blown away materials are blown away dollars, and finally, it is dangerous to the environment.

The environmental impact of dust and sediment is significant. They smother animals and plants that live on the bottom of creek beds and make the creeks shallower. They carry nutrients which can lead to algal blooms and fish kills, as well as weeds which can take over from native plants.

Even though mud and dirt are natural they are still serious pollutants that must be prevented from entering our waterways.

What do I need to do?

Before building commences:

Assess the dust potential of your site and decide on dust controls. If there is high risk of dust generation then barriers to divert the wind up and over the site can be constructed. These include shade cloth walls of height one-fifth the site length. Document controls on your Soil and Water Management Plan and ensure staff are aware of its importance.

Installing the controls:

Good sediment management can alleviate most of the dust problem. Some of the steps that can be taken to minimise dust include:

- Maintain as much vegetation as possible
- Cover materials and stockpiles
- Ensure that all equipment has dust suppressors fitted
- Dampen the site slightly during excavation or when dust is being raised. Be careful not to wet it to the point of creating polluted runoff.
- Ensure that vehicles only leave via the stabilised site access
- Minimise the amount of the site that is disturbed at any one time

All of these actions will help to minimise the amount of sediment loose on the site and therefore the dust that can be generated.

If dust becomes too serious on windy days the best option is to cease work until wind conditions are suitable.

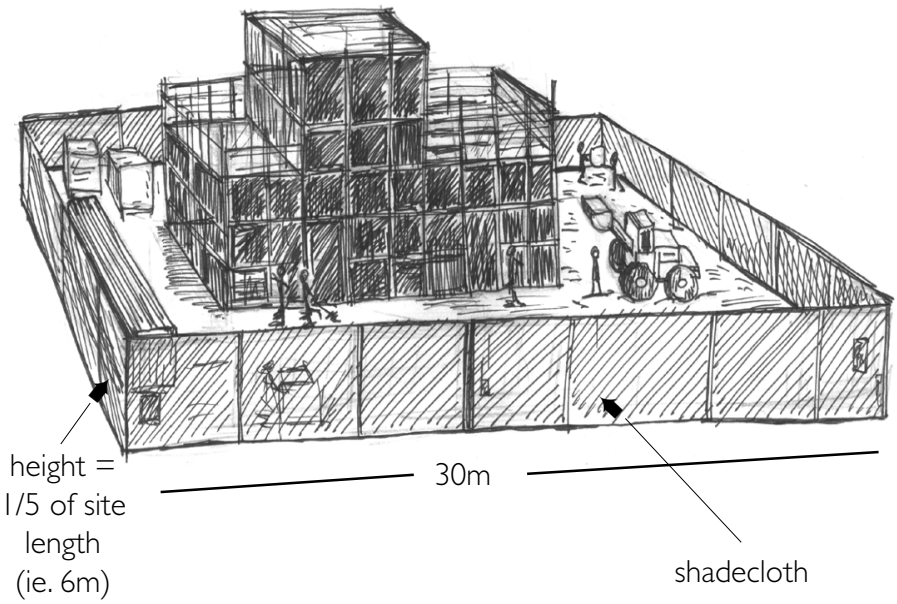

Fact Sheet 2

Maintenance of the sediment controls:

Dust collected around sediment controls will need to be removed regularly to maintain effectiveness. Built up material can be restockpiled, used on site or collected by an Earth Moving Company.

Inspect and sweep roads at the end of each day and when rain is likely.

On larger sites dust monitoring should be undertaken. The National Health and Medical Research Centre (NHMRC) guidelines require an annual mean of 90ug/m^3 for total suspended particulate.



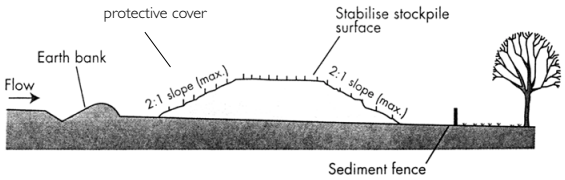

Remember:

Everyone has a responsibility to protect the environment. The site supervisor is required to make sure that all workers, including sub-contractors are doing the right thing and all workers are required to notify their supervisors and Council if they see pollution occurring.

It is illegal for any substance other than rainwater to enter the stormwater system. If you do have an accident and pollution occurs you are required by law to notify the Council so that they can work with you to minimise any harm to the environment.

Penalties for polluting the stormwater system range from $750 on the spot fines to $1 million and seven years in gaol. Both companies and individuals can be fined.

Council Officers and the EPA enforce the environmental legislation and do routine inspections of building sites. They can issue notices to make companies clean up sites, change the way they are managing the sites and if necessary, cease work. They will attempt to work with you but penalties will be issued if a satisfactory environmental outcome is not achieved.

List of fact sheets available from Council:

1. Diversion of Upslope Water
2. **Dust Control**
3. Early installation of Roof Drainage
4. Excavation Pump Out
5. Protected Concrete, Brick and Tile Cutting
6. Protected Concrete Delivery
7. Protected Service Trenches
8. Protected Stockpiles
9. Protected Wash Areas
10. Protected Waste Management and Chemical Storage
11. Protecting Vegetation
12. Protection of Gutter and Street Stormwater Drains
13. Protection of Site Stormwater Pits
14. Sediment Controls
15. Soil and Water Management Plans
16. Stabilised Site Access

For further information on preventing pollution from building and construction sites contact your local council:

'Do it right on site' is funded by the Natural Heritage Trust and the Southern Sydney Regional Organisation of Councils – Bankstown, Botany Bay, Canterbury, Hurstville, Kogarah, Marrickville, Randwick, Rockdale, South Sydney, Sutherland Shire, Waverley and Woollahra.

THE DRAIN IS JUST FOR RAIN

Southern Sydney Regional Organisation of Councils

Excavation Pump Out

'Do it right on site' is a project to help the construction industry protect the environment and achieve the many benefits that come from doing so.

Excavation Pumpout

What is it?

Excavation pump out refers to the pumping of water collected in the bottom of excavated sites to the stormwater system. This water may be ground water or collected rain water.

Why is it important?

Rain Water

Rain water pooled on building sites picks up mud, dirt and any other contaminants present.

All of these pollutants can cause serious harm to our waterways. Even if the water is just muddy it can cause significant damage through smothering plants and bottom dwelling animals.

Ground Water

Ground water seeping up from aquifers may contain a range of contaminants such as heavy metals, petrochemicals and toxins depending on prior land uses in the area.

Approval is needed from the Department of Land and Water Conservation and Council to install ground water bores or spear points for pumpout of ground water.

Fact Sheet 4

What do I need to do?

Before building commences:

Review the site requirements and consider the best option for dealing with the collected water. Depending on the level of contamination it may be possible to:

1) pump it after treatment to the stormwater system
2) pump it to the sewer with approval from Sydney Water or
3) have it collected by a liquid waste company for disposal at a licensed treatment facility.

The second and third options are the most preferable as they reduce the risk to the stormwater system and ensure you are not breaking the law. Document the methods to be used on your Soil and Water Management Plan and ensure that staff are aware of its importance. If the groundwater is contaminated EPA advice should be sought and may require waste disposal tracking.

Installing the controls:

If the water contains only sediment it can be pumped to the stormwater system after filtering. It must have less than 50 mg/L Total Suspended Solids. This is water with no visible cloudiness. If you do not have time or room on-site to let the sediment settle naturally, flocculants such as gypsum can be used. Flocculants speed up the settling process. Unfortunately they raise the pH of the water and pH correction is needed prior to pumping to the stormwater system. Some flocculating agents can be toxic to fish above certain critical concentrations. Council advice should be sought prior to their use. Once settled, pump the clean water from the top to an area of the site where it can soak in or to the stormwaer system. The settled sediments, "the sludge", can be reused on site or disposed of in a bin.

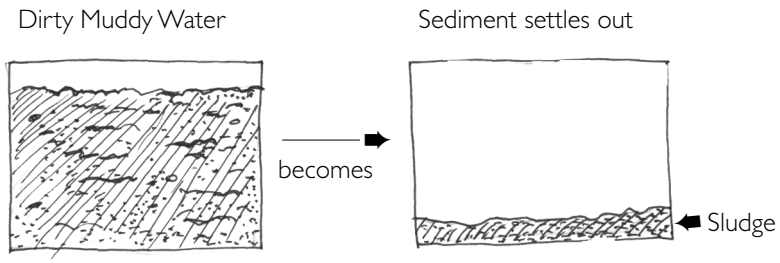

Sediment settles over time but can be sped up with floculant.
Reuse sediment or place in bin

Pump clear water to "soak in" site or to stormwater system

One method of filtering site water before discharge into the stormwater system.

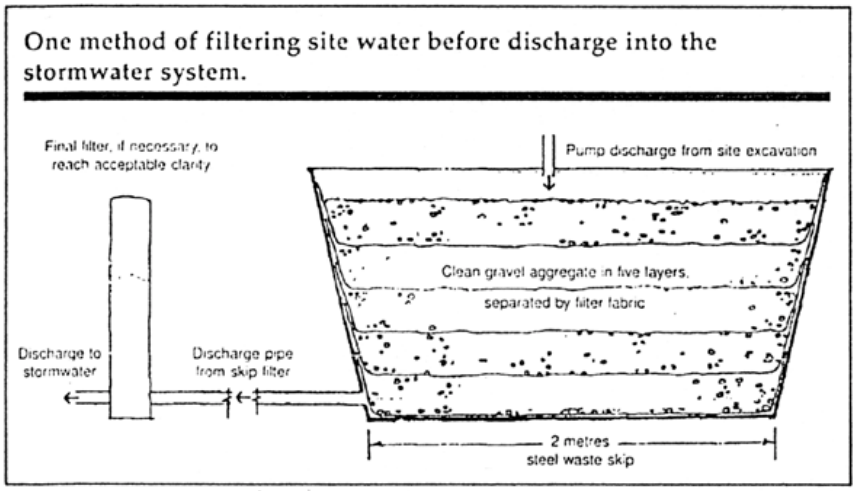

Source: Environetwork News, EPA, 5/99

Maintenance of the sediment controls:

If you install a filtering system such as the one pictured it will need to be cleaned regularly to remove the sediment that it filters out.

Remember:

Everyone has a responsibility to protect the environment. The site supervisor is required to make sure that all workers, including sub-contractors are doing the right thing and all workers are required to notify their supervisors and Council if they see pollution occurring.

It is illegal for any substance other than rainwater to enter the stormwater system. If you do have an accident and pollution occurs you are required by law to notify the Council so that they can work with you to minimise any harm to the environment.

Penalties for polluting the stormwater system range from $750 on the spot fines to $1 million and seven years in gaol. Both companies and individuals can be fined.

Council Officers and the EPA enforce the environmental legislation and do routine inspections of building sites. They can issue notices to make companies clean up sites, change the way they are managing the sites and if necessary, cease work. They will attempt to work with you but penalties will be issued if a satisfactory environmental outcome is not achieved.

List of fact sheets available from Council:

1. Diversion of Upslope Water
2. Dust Control
3. Early installation of Roof Drainage
4. **Excavation Pump Out**
5. Protected Concrete, Brick and Tile Cutting
6. Protected Concrete Delivery
7. Protected Service Trenches
8. Protected Stockpiles
9. Protected Wash Areas
10. Protected Waste Management and Chemical Storage
11. Protecting Vegetation
12. Protection of Gutter and Street Stormwater Drains
13. Protection of Site Stormwater Pits
14. Sediment Controls
15. Soil and Water Management Plans
16. Stabilised Site Access

For further information on preventing pollution from building and construction sites contact your local council:

'Do it right on site' is funded by the Natural Heritage Trust and the Southern Sydney Regional Organisation of Councils – Bankstown, Botany Bay, Canterbury, Hurstville, Kogarah, Marrickville, Randwick, Rockdale, South Sydney, Sutherland Shire, Waverley and Woollahra.

THE DRAIN IS JUST FOR RAIN

Southern Sydney Regional Organisation of Councils

The Law in detail:

Pollution from building and construction sites is regulated under the Protection of the Environment Operations Act 1997 (POEO Act). Under this Act it is an offence for anyone to let any substance other than rainwater enter a waterway including the stormwater system.

The Council and the Environment Protection Authority (EPA) can issue notices and penalties on building and construction sites to protect the environment. There are three kinds of notices:

- *Clean up notices* can be issued to require clean up of sites.
- *Prevention notices* can be issued if an activity is being carried out or is suspected to be carried out in an environmentally unsatisfactory manner. The prevention notice requires certain action to be taken and can be appealed in the Land and Environment Court.
- *Prohibition notice* can be issued to require work to cease for a given time.

When a company receives a Clean Up or Prevention Notice they may be liable for a $320 administration fee. They can also be charged all costs incurred by the EPA or Council to ensure compliance with the notice.

As well as notices there are three levels of offences that apply to building and construction sites if they pollute the environment:

- *Tier 1 Offences* are the most serious and involve wilful or negligent behaviour resulting in harm to the environment. The penalty is up to $1 million and 7 years imprisonment. In defending against a Tier 1 offence the company or individual will need to show that they had no control over the pollution event and that they took reasonable precautions and exercised due diligence to prevent the offence.
- *Tier 2 Offences* have a maximum penalty of $250,000 for a corporation and $120,000 for an individual. Further daily penalties apply to continuing offences.
- *Tier 3 offences* are dealt with by penalty infringement notices, similar to speeding fines. These notices impose a fine that can be paid or defended in court. The maximum penalty is $1500 for a corporation or $750 for an individual.

Public Register of Notices: Councils and the EPA are required to keep a public register of all companies and individuals who are issued notices. So in addition to the fines and lost time in cleaning up, companies who pollute also risk damaging their reputation. This is a foolish thing to do when the public are becoming more and more concerned about the environment and are starting to look at a company's environmental record when deciding which company to use.
If you do have a pollution incident which harms the environment, under the POEO Act, you have a *duty to notify* the Council or EPA. They can then work with you to minimise the harm to the environment. The maximum penalty for failing to notify them are $250 000 for corporations or $120 000 for individuals. Further daily penalties apply to continuing offences.

List of fact sheets available from Council:

1. Diversion of Upslope Water
2. Dust Control
3. Early installation of Roof Drainage
4. Excavation Pump Out
5. Protected Concrete, Brick and Tile Cutting
6. Protected Concrete Delivery
7. Protected Service Trenches
8. Protected Stockpiles
9. Protected Wash Areas
10. Protected Waste Management and Chemical Storage
11. Protecting Vegetation
12. Protection of Gutter and Street Stormwater Drains
13. Protection of Site Stormwater Pits
14. Sediment Controls
15. Soil and Water Management Plans
16. Stabilised Site Access

For further information on preventing pollution from building and construction sites contact your local council.

'Do it right on site' is funded by the Natural Heritage Trust and the Southern Sydney Regional Organisation of Councils – Bankstown, Botany Bay, Canterbury, Hurstville, Kogarah, Marrickville, Randwick, Rockdale, South Sydney, Sutherland Shire, Waverley and Woollahra.

THE DRAIN IS JUST FOR RAIN

Southern Sydney Regional Organisation of Councils

'Do It Right On-Site'

Soil and Water Management for the Construction Industry

'Do it right on-site' is a project to help the construction industry protect the environment and achieve the many benefits that come from doing so.

Impact of Building and Construction Industry on the Environment:

The Building and Construction Industry has a large impact on the environment, in particular our waterways. Sand, soil, cement slurry, paint and other building materials that enter our waterways kill fish and aquatic plants, silt up streams, and block stormwater pipes which leads to increased flooding.

Due to the high number of construction sites even small amounts of pollution from each site is enough to cause significant damage to our waterways. This project aims to work cooperatively with the construction industry to find ways to prevent pollution. Together we can make a difference.

Who is responsible for ensuring there is no pollution from the site?

Everyone! Under legislation anyone who places material into the stormwater system or even in a position where it may enter the stormwater system is guilty of an offence. Depending on the extent of the pollution, penalties range from on-the-spot fines of $750 to a maximum of $1 million or 7 years in gaol. It is the Builder/Site Supervisor's responsibility to ensure that all workers on site, including sub-contractors, do not breach environmental laws. Workers have a responsibility under the law to notify their supervisors if they see a pollution incident which harms the environment. If the supervisor cannot be contacted, workers should notify the Council.

What are the benefits of preventing pollution?

Benefits to the Builder

- ✔ a better looking more saleable site
- ✔ reduced clean up costs
- ✔ less mud and dust problems
- ✔ improved occupational health and safety on site
- ✔ money saved due to reduced stockpile losses
- ✔ improved drainage and reduced site wetness which will result in less down time, earlier completion and earlier sales!
- ✔ fewer public complaints
- ✔ no fines, no problems with Council
- ✔ better image within the community
- ✔ marketing advantage to win work from environmentally conscious clients
- ✔ better fishing due to improved water quality!!

Benefits to the Owner

- ✔ Reduced site rehabilitation/landscaping costs because the soil and vegetation is still on the site!
- ✔ Peace of mind knowing that their home hasn't caused damage to the environment
- ✔ Less chance of flooding as the stormwater drains are not clogged up with sediment

Benefits to the Community

- ✔ less risk of flooding
- ✔ healthier waterways with more plants and animals
- ✔ increased recreational opportunities in and around our waterways
- ✔ increased sales as surrounding environment is more attractive

DO IT RIGHT ON SITE – ENVIRONMENTAL INFORMATION FOR BUILDERS

How can you prevent pollution from the site?

Step 1: Planning

Prepare a soil and water management plan, also known as a sediment and erosion control plan. This will be required prior to Council issuing you a Construction Certificate (either at DA stage or as a condition of consent). The Soil and Water Management Plan should outline the methods you will use to prevent pollution of the stormwater system throughout the life of the construction period. There may be different controls needed as the site develops due to changes in drainage patterns and location of building materials. These stages and their controls must be shown on your Soil and Water Management Plan. Sample Soil and Water Management Plans are available from Council, however you must develop a plan specific to your site.

Step 2: Installation of soil and water controls

Before work commences install the sign provided by the Council and ensure that all workers know their responsibilities. Set up the soil and water controls. A recommended sequence for doing this is:

1) establish a single stabilised entry/exit point.
2) install sediment fence(s) along the low side of the site.
3) divert up slope water around the work site and stabilise channels.
4) clear only the areas necessary - fence off no go areas where vegetation is to be kept - and plan the staging of work to minimise the amount of soil exposed at any time. Revegetate any areas that will be left exposed for more than 14 days.
5) store stockpiles on site and place sediment controls around them. If storage room is not available on site, seek Council approval for an offsite storage area with pedestrian access and appropriate soil and water controls.
6) stabilise exposed earth banks (use vegetation or erosion control mats, put sediment fence down slope).
7) install onsite waste receptacles (mini-skips, bins, wind proof litter receptors).
8) commence building activities.
9) install roof downpipes prior to frame inspection.

Step 3: Maintenance of soil and water controls

Soil and water controls should be checked daily to ensure that they are operating effectively. Maintenance that will be required includes:

- Removing sediment collected by sediment fences and catch drains
- Topping up the gravel on the stabilised entrance way
- Repairing erosion in drainage channels
- Inspecting roadways and gutters and sweeping up any sediment

Remember that the soil and water controls may need to be modified if the slope and drainage paths are changed as the site develops. Best practice includes anticipation of risks as well as being prepared for abnormal circumstances and emergencies eg: storage of clean up materials and extra sediment fence on site just in case.

Step 4: Finalisation of site

Ensure the site is stabilised -no exposed soil remains- before removing the soil and water controls. If landscaping is not completed prior to handover ensure that the new owners are aware of their responsibility to prevent pollution from entering the stormwater system.

Ways you can reduce erosion & control sediment on a building or construction site

Follow these site management practices and you will help reduce impact on our waterways . . .

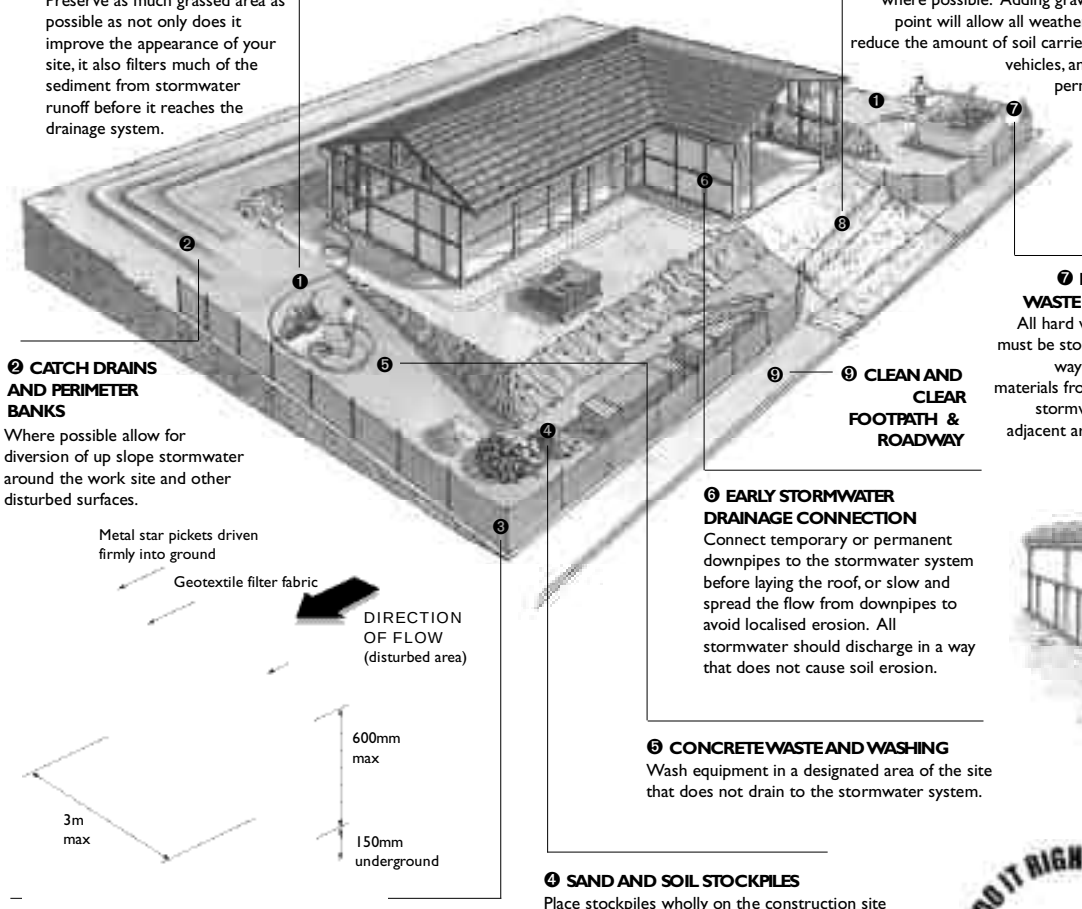

❶ LIMIT DISTURBANCE WHEN EXCAVATING
Preserve as much grassed area as possible as not only does it improve the appearance of your site, it also filters much of the sediment from stormwater runoff before it reaches the drainage system.

❷ CATCH DRAINS AND PERIMETER BANKS
Where possible allow for diversion of up slope stormwater around the work site and other disturbed surfaces.

❸ INSTALL A SEDIMENT BARRIER
Sediment barriers down slope of the building site filter coarse sediment before it can wash into gutters, drains and waterways.
You can . . .
- attach geotextile sediment fabric to posts with the fabric buried in an up slope trench; or
- place straw bales, staked in a 10mm (minimum) deep trench; or
- place turf of a 60mm (minimum) width along the kerb line.

❹ SAND AND SOIL STOCKPILES
Place stockpiles wholly on the construction site and behind a sediment barrier. Soil or cement should be covered at the end of each day if excessive wind or rain is likely.

❺ CONCRETE WASTE AND WASHING
Wash equipment in a designated area of the site that does not drain to the stormwater system.

❻ EARLY STORMWATER DRAINAGE CONNECTION
Connect temporary or permanent downpipes to the stormwater system before laying the roof, or slow and spread the flow from downpipes to avoid localised erosion. All stormwater should discharge in a way that does not cause soil erosion.



❼ LITTER AND WASTE CONTROL
All hard waste and litter must be stored on site in a way to prevent any materials from entering the stormwater system & adjacent areas by wind or water action.

❽ SINGLE GRAVELLED ENTRY/EXIT
Restrict vehicle access to one entry/exit point where possible. Adding gravel to the access point will allow all weather entry/exit, will reduce the amount of soil carried off the site by vehicles, and will provide a permanent base for the driveway.

❾ CLEAN AND CLEAR FOOTPATH & ROADWAY



Illustration reproduced courtesy of Brisbane City Council

Protected Stockpiles

'Do it right on site' is a project to help the construction industry protect the environment and achieve the many benefits that come from doing so.

Protected Stockpiles

What are they?

They are materials such as sand, gravel, topsoil, mulch and woodchip stored in a way that will not enter the stormwater system.

Why are they important?

Stockpiles are at risk of being washed or blown away and polluting stormwater. Loose materials in heaps with steep sides and impervious foundations are most at risk. Not only does this affect the environment but it is expensive to the builder, increasing the amount of materials needing to be purchased for the development.

The environmental impact of these materials is significant. Mulch and woodchip decompose absorbing all the oxygen in the water resulting in suffocation of animals. Sediment settles making creeks shallower and smothering animals and plants that live on the creek beds. This shallower water depth also results in the suns rays heating the water. Many native plants and animals can not survive in this hotter water and die.

Fact Sheet 8

What do I need to do?

Before building commences:

Identify a protected storage area for stockpiles. This should be inside the site under cover, away from stormwater flow paths, with erosion control measures such as sediment fence, gravel sausage or straw bales placed around them. If there is no room on site Council approval will be needed to store materials on the kerb or footpath. Materials should be stored in sand bags or bale/pallet containers with sediment controls around them. Document your storage area on the soil and water management plan and ensure staff are aware of its importance.

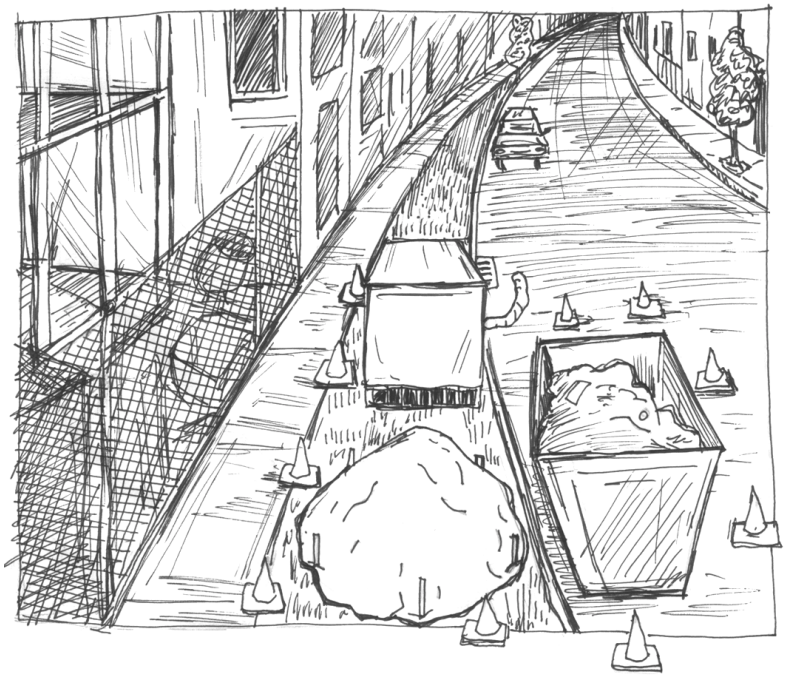

Installing the controls:

1. Locate stockpile away from stormwater flow paths, roads and hazard areas (ideally at least 5m away).
2. Place on a level area as a low, flat, elongated mound.
3. Where there is sufficient area topsoil stockpiles shall be less than 2m in height.
4. Construct an earth bank on the upslope side to divert run off around the stockpile and a sediment fence 1 to 2 m downslope of the stockpile (or sand bag, gravel sausage).
5. Stockpiles should be covered during windy conditions, rain or unattended site periods.
6. Once the roof has been installed on the frame, move stockpiles inside.

Maintenance of the controls:

Stockpiles should be checked and covered at the end of each day. Materials trapped by the down slope controls should be removed regularly to maintain their effectiveness. Built up material can be re-stockpiled, used on site or collected by an Earth Moving Company. Incorrect storage of stockpiles is a major source of stormwater pollution. All site workers, subcontractors, and delivery drivers should be advised of their responsibilities. Delivery drivers should be given a designated location to deliver materials on site.

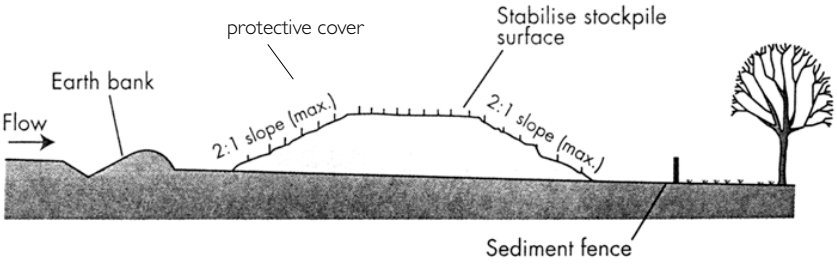

Remember:

Everyone has a responsibility to protect the environment. The site supervisor is required to make sure that all workers, including sub-contractors are doing the right thing and all workers are required to notify their supervisors and Councils if they see pollution occurring.

It is illegal for any substance other than rainwater to enter the stormwater system. If you do have an accident and pollution occurs you are required by law to notify the Council so that they can work with you to minimise any harm to the environment.

Penalties for polluting the stormwater system range from $750 on the spot fines to $1 million and seven years in gaol. Both companies and individuals can be fined.

Council Officers and the EPA enforce the environmental legislation and do routine inspections of building sites. They can issue notices to make companies clean up sites, change the way they are managing the sites and if necessary, cease work. They will attempt to work with you but penalties will be issued if a satisfactory environmental outcome is not achieved.

List of fact sheets available from Council:

1. Diversion of Upslope Water
2. Dust Control
3. Early installation of Roof Drainage
4. Excavation Pump Out
5. Protected Concrete, Brick and Tile Cutting
6. Protected Concrete Delivery
7. Protected Service Trenches
8. **Protected Stockpiles**
9. Protected Wash Areas
10. Protected Waste Management and Chemical Storage
11. Protecting Vegetation
12. Protection of Gutter and Street Stormwater Drains
13. Protection of Site Stormwater Pits
14. Sediment Controls
15. Soil and Water Management Plans
16. Stabilised Site Access

For further information on preventing pollution from building and construction sites contact your local council:

'Do it right on site' is funded by the Natural Heritage Trust and the Southern Sydney Regional Organisation of Councils – Bankstown, Botany Bay, Canterbury, Hurstville, Kogarah, Marrickville, Randwick, Rockdale, South Sydney, Sutherland Shire, Waverley and Woollahra.

THE DRAIN IS JUST FOR RAIN

Southern Sydney Regional Organisation of Councils

Protected Wash Areas

'Do it right on site' is a project to help the construction industry protect the environment and achieve the many benefits that come from doing so.

Protected Wash Areas
What are they?

Protected Wash Areas refers to having a designated spot on site that does not drain to the stormwater system for washing of all painting, plastering, concreting and other dirty equipment.

Why are they important?

Even at low concentrations water soluble paints (acrylics) raise the turbidity in creeks which reduces oxygen and light, resulting in plants, fish and frog deaths. Oil or turps based paints form a thin film over the surface of water, starving insects, frogs, and fish species of oxygen. They can also contain heavy metal components that are highly toxic and irritating to all animal species including humans. Concrete alters the pH of the water making it too alkaline for many plants and animals to survive. Protected Wash Areas are required to trap silt and pollutants and prevent them entering the stormwater system.

What do I need to do?

Before building commences:

Choose a site for the wash down area that is away from drainage lines and stormwater pits. Show its location on the Soil and Water Management Plan and ensure all staff are aware of it.

Installing the controls:

The wash down area should have sediment controls around it and be large enough to hold all waste water generated. It sould be clearly signposted to alert subcontractors and staff of their responsibilities.

Minimise the amount of waste water generated by:

- Sweeping excess dirt and mud off equipment prior to washing.
- With Paint wastes- Spin the rollers and brushes to remove excess paint and return as much as possible to the original container for reuse. For water based paints- wash brushes in small amounts of water over newspaper. This will let the water soak through into the ground and keep the paint residue on the paper. The paper can then be placed in a solid waste bin or taken to a licensed solid waste transfer station. It is illegal to let paint and other liquid wastes contaminate the soil.
- For oil based paints- wash equipment in a series of solvent baths until clean. The solvent can be reused until it becomes saturated with paint. Solvent should be stored in air tight tins to prevent evaporation and disposed of to a licenced solid waste transfer station. It can not be placed in the bin or on the ground.

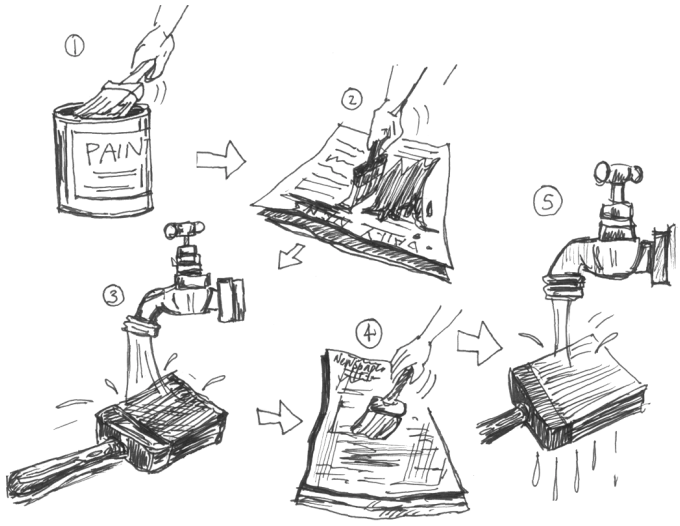

- Plastering wastes and wash waters should be allowed to dry within the protected wash area and then disposed of either to a bin or taken to a licensed waste depot. Solid wastes from plastering such as calcium sulphate can be used as a modifier in gardens.

Fact Sheet 9

Remember to clean up all site debris- don't sweep or hose it into the gutter.



Maintenance of the controls:

The protected wash area and its sediment controls will need to be emptied of solid residues regularly in order for it to have the capacity to catch and detain waste waters. The larger the area the less often this will need to be done. Solids from this process should be disposed of in a bin or taken to a licensed waste depot.

Remember:

Everyone has a responsibility to protect the environment. The site supervisor is required to make sure that all workers, including sub-contractors are doing the right thing and all workers are required to notify their supervisors and Council if they see pollution occurring.

It is illegal for any substance other than rainwater to enter the stormwater system. If you do have an accident and pollution occurs you are required by law to notify the Council so that they can work with you to minimise any harm to the environment.

Penalties for polluting the stormwater system range from $750 on the spot fines to $1 million and seven years in gaol. Both companies and individuals can be fined.

Council Officers and the EPA enforce the environmental legislation and do routine inspections of building sites. They can issue notices to make companies clean up sites, change the way they are managing the sites and if necessary, cease work. They will attempt to work with you but penalties will be issued if a satisfactory environmental outcome is not achieved.

List of fact sheets available from Council:

1. Diversion of Upslope Water
2. Dust Control
3. Early installation of Roof Drainage
4. Excavation Pump Out
5. Protected Concrete, Brick and Tile Cutting
6. Protected Concrete Delivery
7. Protected Service Trenches
8. Protected Stockpiles
9. **Protected Wash Areas**
10. Protected Waste Management and Chemical Storage
11. Protecting Vegetation
12. Protection of Gutter and Street Stormwater Drains
13. Protection of Site Stormwater Pits
14. Sediment Controls
15. Soil and Water Management Plans
16. Stabilised Site Access

For further information on preventing pollution from building and construction sites contact your local council:

'Do it right on site' is funded by the Natural Heritage Trust and the Southern Sydney Regional Organisation of Councils – Bankstown, Botany Bay, Canterbury, Hurstville, Kogarah, Marrickville, Randwick, Rockdale, South Sydney, Sutherland Shire, Waverley and Woollahra.

THE DRAIN IS JUST FOR RAIN

Southern Sydney Regional Organisation of Councils

Protection of Gutter and Street Stormwater Drains

'Do it right on site' is a project to help the construction industry protect the environment and achieve the many benefits that come from doing so.

Protection of Gutter and Street Stormwater Drains

What is it?

This refers to placing sediment collection devices around or in the drains down slope of your site to prevent pollutants entering. ***This should not be your only measure.***

Street drain protection is a backup measure to support your on-site controls.

Why is it important?

The environmental impact of sediment such as mud and dirt is significant. They smother animals and plants that live on the bottom of creek beds and make the creeks shallower. This results in the sun's rays heating the water. Many native plants and animals can not survive in this hotter water. Even though mud and dirt are natural they are still serious pollutants that must be prevented from entering our waterways.

What do I need to do?

Before building commences:

Find the street drains below your work site. Choose the most appropriate method for protection and install prior to commencement of building works. Document these on your Soil and Water Management Plan and ensure staff are aware of its importance.

Installing the controls:

Choose the best down slope control method for your site. Those that collect sediment above the pit are easier to clean but have low storage capacity compared to controls that 'sit' in the pits. Place cones around controls in the gutters or on roads to prevent drivers damaging them.

Portable gravel kerb inlet sediment trap:

This trap involves a roll of wire mesh and geotextile filter fabric filled with gravel in front of the kerb inlet. It has the benefit of being portable and easily removed for cleaning. Ensure there is a gap at the top to allow overtopping and prevent flooding.

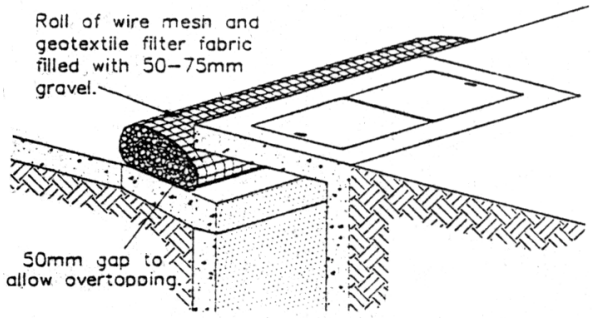

Portable Gravel Kerb Inlet Sediment Trap

Gravel surface barrier strategy

This method involves placing wire mesh over the drain and placing large gravel upslope of it. The sediment will be filtered out into the gravel with only the clean water entering the stormwater system.

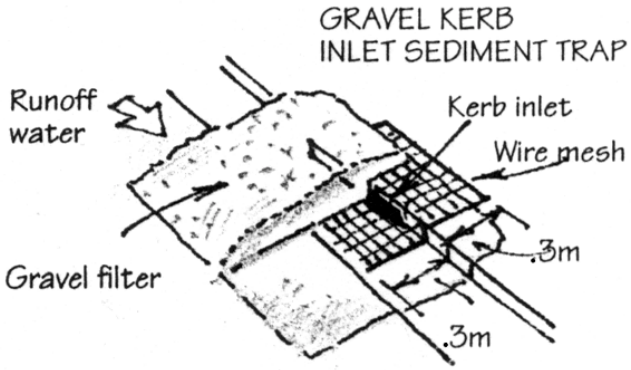

Fact Sheet 12

Sandbag kerb sediment trap

Place sandbags in front of flow of water. This will slow down the water enabling sediment to settle out. Two or three of these traps in a row may be required to ensure sediment settles out.

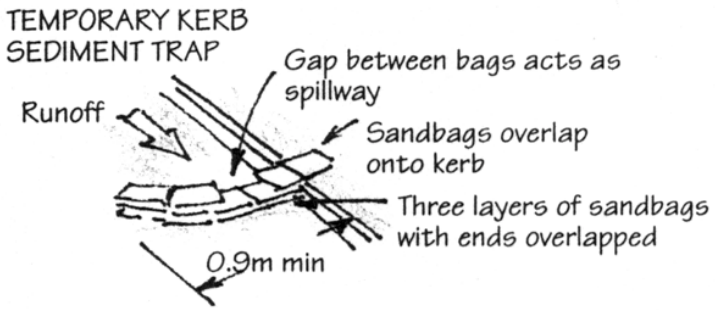

Pit Baskets

There are a range of products that can be placed inside side entry pits that act as baskets or sacks to trap any pollutants that enter. Council permission must be sought before placing any items inside the side entry / gully pit.

Maintenance of the sediment controls:

All sediment collection devices will need to be cleaned regularly to maintain effectiveness. The built up material can be re-stockpiled, used on site or collected by an Earth Moving Company.

Remember:

Everyone has a responsibility to protect the environment. The site supervisor is required to make sure that all workers, including sub-contractors are doing the right thing and all workers are required to notify their supervisors and Council if they see pollution occurring.

It is illegal for any substance other than rainwater to enter the stormwater system. If you do have an accident and pollution occurs you are required by law to notify the Council so that they can work with you to minimise any harm to the environment.

Penalties for polluting the stormwater system range from $750 on the spot fines to $1 million and seven years in gaol. Both companies and individuals can be fined.

Council Officers and the EPA enforce the environmental legislation and do routine inspections of building sites. They can issue notices to make companies clean up sites, change the way they are managing the sites and if necessary, cease work. They will attempt to work with you but penalties will be issued if a satisfactory environmental outcome is not achieved.

List of fact sheets available from Council:

1. Diversion of Upslope Water
2. Dust Control
3. Early installation of Roof Drainage
4. Excavation Pump Out
5. Protected Concrete, Brick and Tile Cutting
6. Protected Concrete Delivery
7. Protected Service Trenches
8. Protected Stockpiles
9. Protected Wash Areas
10. Protected Waste Management and Chemical Storage
11. Protecting Vegetation
12. **Protection of Gutter and Street Stormwater Drains**
13. Protection of Site Stormwater Pits
14. Sediment Controls
15. Soil and Water Management Plans
16. Stabilised Site Access

For further information on preventing pollution from building and construction sites contact your local council:

'Do it right on site' is funded by the Natural Heritage Trust and the Southern Sydney Regional Organisation of Councils – Bankstown, Botany Bay, Canterbury, Hurstville, Kogarah, Marrickville, Randwick, Rockdale, South Sydney, Sutherland Shire, Waverley and Woollahra.

THE DRAIN IS JUST FOR RAIN

Southern Sydney Regional Organisation of Councils

Protection of Site Stormwater Pits

'Do it right on site' is a project to help the construction industry protect the environment and achieve the many benefits that come from doing so.

Protection of Site Stormwater Pits

What is it?

This refers to placement of sediment collection devices around any existing stormwater drains on the site.

Why is it important?

Stormwater drains on the construction site are at high risk of having pollutants such as dirt, stockpiled soil, mulch and barkchips washed straight into them. The environmental impact of these materials is significant. Mulch and woodchip decompose absorbing all the oxygen in the water resulting in suffocation of animals. Sediment settles making creeks shallower, smothering animals and plants that live on the creek beds. Many native plants and animals can not survive this and die.





Fact Sheet 13

What do I need to do?

Before building commences:

Identify any stormwater drains on the site. Plan the layout of the work site so that any wash down areas, tile or brick cutting areas are not near these drains. Clearly mark the stormwater drains on the site and choose a method of protection for them. Install the protective controls prior to building work commencing. Document all of this on your Soil and Water Management Plan and ensure staff are aware of its importance.

Installing the controls:

There are a range of sediment traps to choose from.

Drop inlet sediment Trap:

Three layers on top of the drain to trap the sediment. 1) heavy gauge wire netting or mesh 2) geotextile filter fabric with 3) a layer of prewashed 50-75mm gravel on top.

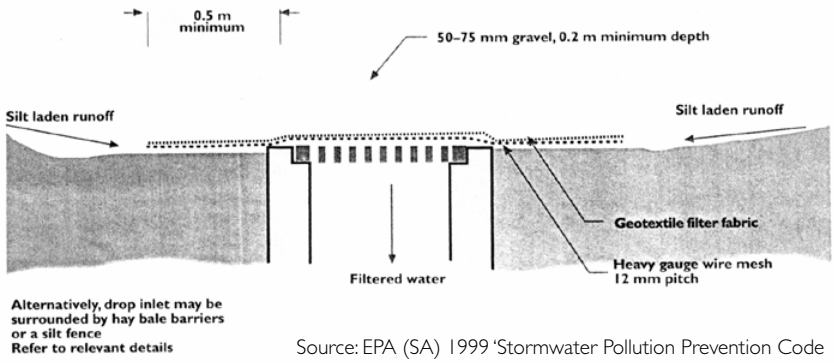

Source: EPA (SA) 1999 'Stormwater Pollution Prevention Code of Practice for the Building and Construction Industry.

Sediment Fence drop inlet sediment trap:

Sediment fence staked around the drain to trap sediment. Note: It is important to partially bury the fabric so that water and sediment can not just flow underneath. The more space between the fence and the drain, the more chance of sediment settling and the greater the capacity of the trap.

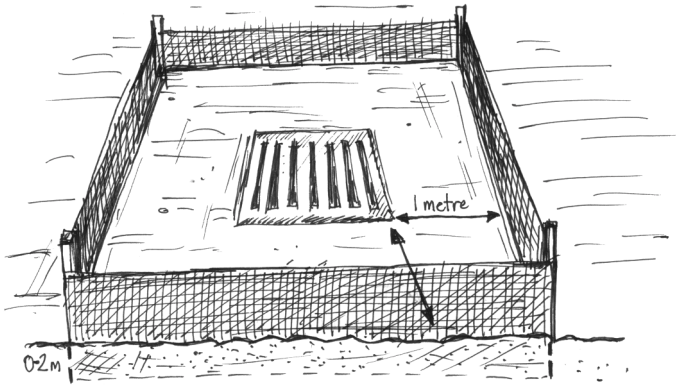

Geotextile Filter Fabric Drop Inlet Sediment Trap

Excavated sediment trap: This is a detention basin technique for on-site drains. The basin depth needs to be at least 0.6m to ensure that water is held in place and sediment can settle out.

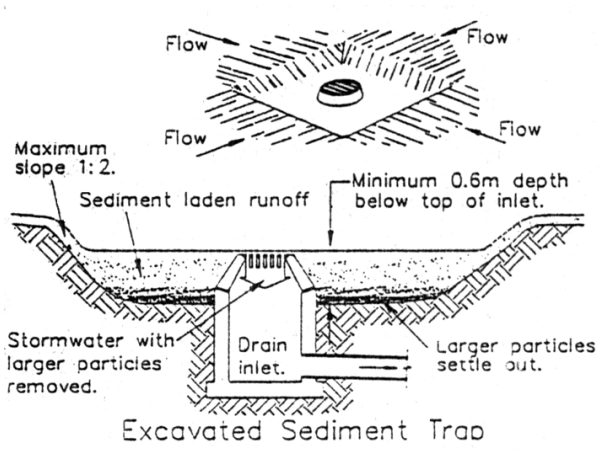

Excavated Sediment Trap

Source: Department of Conservation and Land Management (1995) 'Preparing an Erosion and Sediment Control Plan'.

Maintenance of the controls:

All sediment collection devices need regular maintenance to stay effective. Remove the built up sediment and check for holes or other breaks in the controls. Repair and replace them. Built up material can be re-stockpiled, used on site or collected by an Earth Moving Company.

Remember:

Everyone has a responsibility to protect the environment. The site supervisor is required to make sure that all workers, including sub-contractors are doing the right thing and all workers are required to notify their supervisors and Council if they see pollution occurring.

It is illegal for any substance other than rainwater to enter the stormwater system. If you do have an accident and pollution occurs you are required by law to notify the Council so that they can work with you to minimise any harm to the environment.

Penalties for polluting the stormwater system range from $750 on the spot fines to $1 million and seven years in gaol. Both companies and individuals can be fined.

Council Officers and the EPA enforce the environmental legislation and do routine inspections of building sites. They can issue notices to make companies clean up sites, change the way they are managing the sites and if necessary, cease work. They will attempt to work with you but penalties will be issued if a satisfactory environmental outcome is not achieved.

List of fact sheets available from Council:

1. Diversion of Upslope Water
2. Dust Control
3. Early installation of Roof Drainage
4. Excavation Pump Out
5. Protected Concrete, Brick and Tile Cutting
6. Protected Concrete Delivery
7. Protected Service Trenches
8. Protected Stockpiles
9. Protected Wash Areas
10. Protected Waste Management and Chemical Storage
11. Protecting Vegetation
12. Protection of Gutter and Street Stormwater Drains
13. **Protection of Site Stormwater Pits**
14. Sediment Controls
15. Soil and Water Management Plans
16. Stabilised Site Access

For further information on preventing pollution from building and construction sites contact your local council:

'Do it right on site' is funded by the Natural Heritage Trust and the Southern Sydney Regional Organisation of Councils – Bankstown, Botany Bay, Canterbury, Hurstville, Kogarah, Marrickville, Randwick, Rockdale, South Sydney, Sutherland Shire, Waverley and Woollahra.

THE DRAIN IS JUST FOR RAIN

Southern Sydney Regional Organisation of Councils

Sediment Controls

'Do it right on site' is a project to help the construction industry protect the environment and achieve the many benefits that come from doing so.

Sediment Control

What is it?

These are a range of products installed across drainage flows to filter sediment out of water and enable its deposition by slowing down water flow. They include sediment fences, straw bales, grass/ vegetation strips and sediment traps/basins. Other controls may be available and advice should be sought from suppliers of Sediment Control Equipment.

Why is it important?

Sediment on building sites causes problems not only for the environment but also for builders. A dirty site causes difficulties in wet weather, increases costs from having to replace stockpiles that are washed away, increases clean up costs, penalties and potential damage to your company's reputation if fined for polluting.

The environmental impact of sediment such as mud and dirt is significant. They smother animals and plants that live on the bottom of creek beds. They settle and make the creeks shallower. Many native plants and animals can not survive this and die. Even though mud and dirt are natural they are still serious pollutants that must be prevented from entering our waterways.

Fact Sheet 14

What do I need to do?

Before building commences:

Prepare a soil and water management plan, also known as a sediment control plan. This will be required by Council prior to issuing a construction certificate (either at DA stage or as a condition of consent) and should outline the methods you will use to prevent pollution of the stormwater system throughout the life of the development. There may be different controls needed as the site develops due to changes in drainage patterns and vegetation. This should be thought through and shown on your plans. Council can provide you with sample plans, however it is important that you develop a plan specifically for your site.

Remember the more erosion you can prevent the less sediment will need to be captured! The easiest way to prevent erosion is to leave shrubs and grass in place. This has the dual effect of holding the soil and dirt together as well as filtering and slowing down water flows enabling sediment to settle out.

If vegetation needs to be removed try not to do it until immediately before works commence or stage the works to limit the amount of the site that is disturbed at any given time. As you move into a new area, revegetate the finished area. Another way to minimise erosion is to ensure that you only have small amounts of sand, soil and other stockpiles on site at any time. Ensure stockpiles are stored in ways to reduce erosion - *see* Fact Sheet 8 on *Protected Stockpiles*.

Installing the controls:

The sediment controls need to be in place prior to the commencement of building works. Remember that the sediment controls will need to be altered as construction occurs and the sites drainage patterns change.

Sediment Fence

A sediment or silt fence is the most widely used strategy. It is constructed from heavy duty geofabric. Although a sediment fence looks like shade cloth it is very different and is not interchangeable. A sediment fence is specifically designed to allow the free passage of water and trap sediment

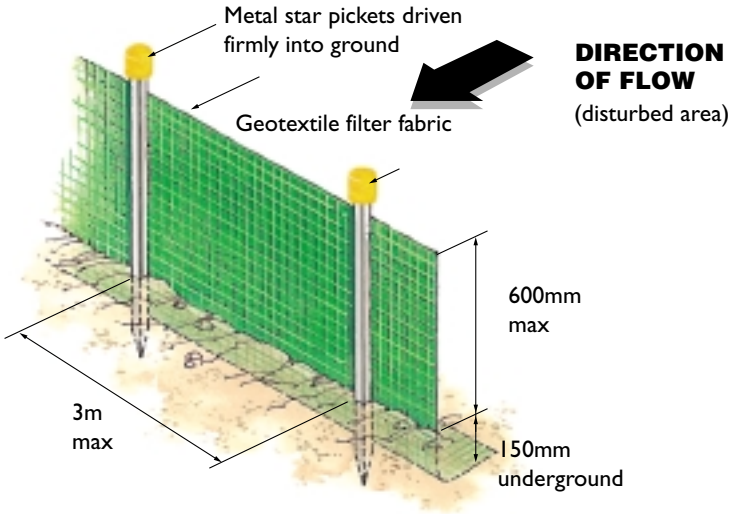

Sediment Fence (continued)

Construction Notes:

1. construct the sediment fence as close as possible to parallel to the contours of the site
2. drive 1.5m long star picket into ground, 3m apart
3. dig a 150mm deep trench along the upslope line of the fence for the bottom of the fabric to be entrenched
4. backfill trench over the base of fabric (where the sediment barrier has to be located on hard pavement that cannot be trenched, a gravity system held firm by its weight eg: gravel sausage can be used.)
5. fix self supporting geotextile to upslope side of posts with wire ties or as recommended by geotextile manufacturer
6. join sections of fabric at a support post with a 150mm overlap

Grass Strip Filters

These are strips of undisturbed vegetation or grass planted down slope from earthworks. They provide a simple method of trapping coarse sediment. The flatter and wider the strips are, the more effective they become. They are only suitable on low grades. A 400mm wide grass strip between the kerb and the footpath can be a good last resort sediment control, filtering the water before it enters the stormwater system.

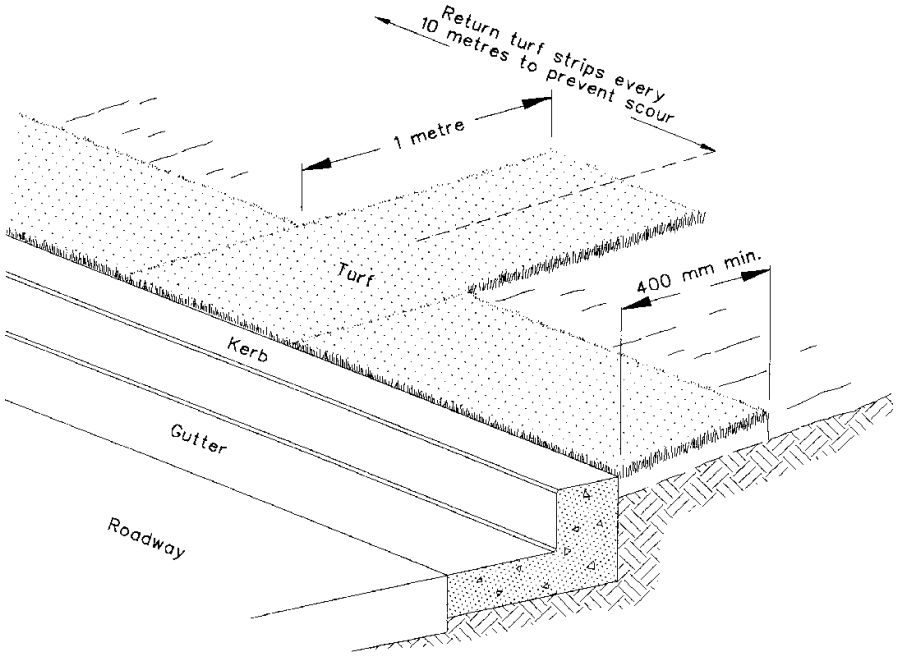

Straw Bale Filters

These are straw bales tightly abutted together and partially buried into the ground. They are only suitable for low flows. Filter fabric can be placed in front of them adding to the sediment stoppage. It is recommended that at least 4 bales are used as during a storm any less result in the water simply hitting the bales and flowing around them. This defeats the purpose of using them, which is to slow the water and have it filter through the bales with the sediment settling out.

Straw bales are usually used incorrectly. Seek Council guidance if unsure.

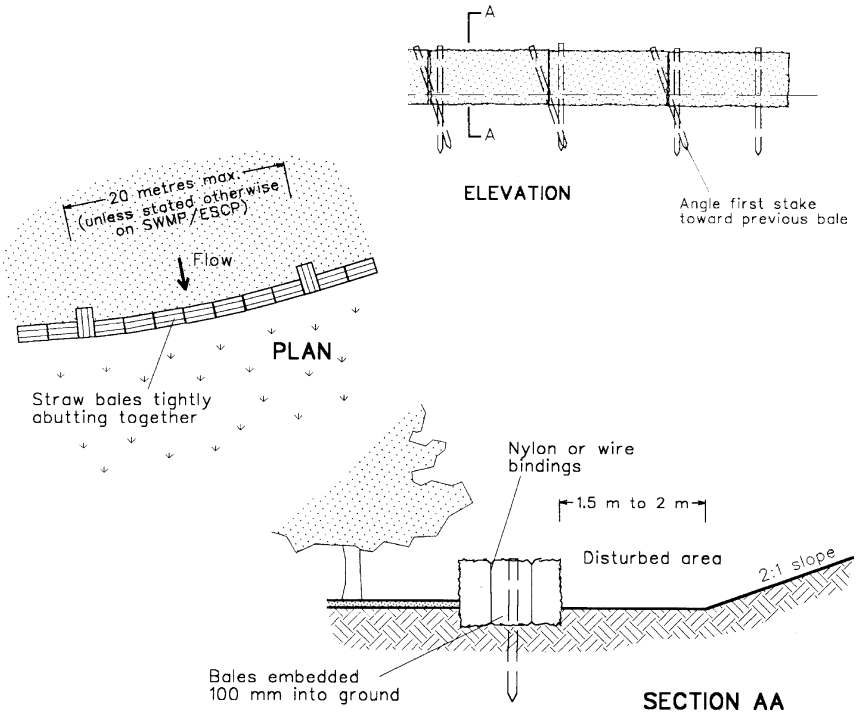

Sediment Traps / Ponds

These are basins designed to capture a concentrated sediment laden flow and store it under still conditions enabling the silt to deposit at the bottom of the trap. The effectiveness of the traps to remove fine particles may be improved by the placement of filter fabric along the uphill face of the embankment.

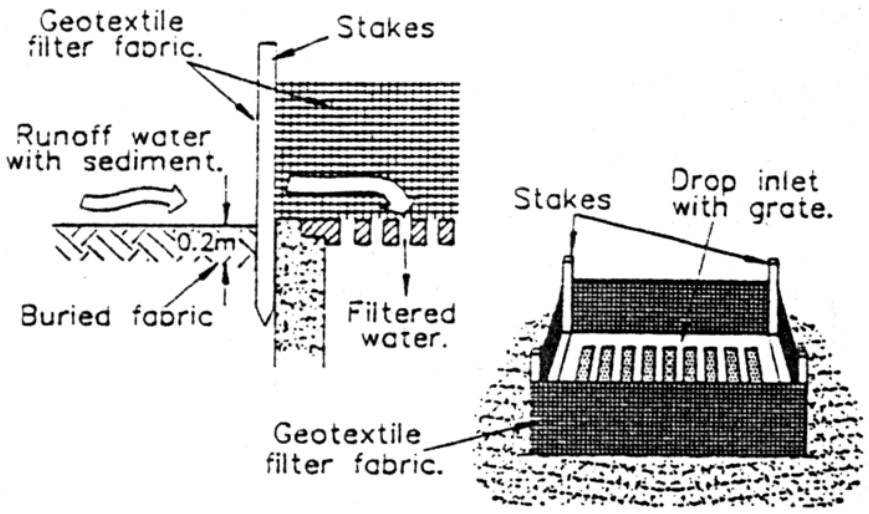

Geotextile Filter Fabric Drop Inlet Sediment Trap.

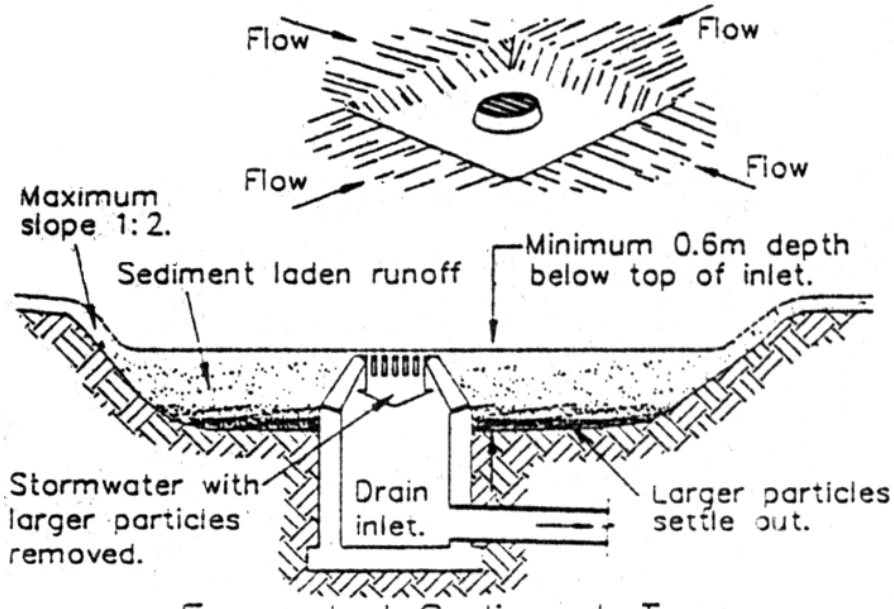

Excavated Sediment Trap

Maintenance of the sediment controls:

Sediment controls will naturally fill up with sediment and need to be maintained to stay effective. This involves removing the built up sediment as well as ensuring that they are still in good working condition.

Often sediment controls will be moved during works and they should be checked daily to ensure they have been put back in place properly.

Straw bales deteriorate and can end up polluting waterways. Their average life is 3 months and should be inspected regularly. Enclosing bales in sediment fence reduces this risk. At the end of their life they can be used as mulch on gardens. Sediment fences should also be checked regularly for holes.

Some Councils do not allow straw bales to be used, so check with them when planning your controls.

Soil and water controls should be kept in place until works are completed. If landscaping is not completed prior to handover ensure that the new owners are aware of their responsibility to prevent pollution from entering the stormwater system.

DO IT RIGHT ON SITE
ENVIRONMENTAL INFORMATION FOR BUILDERS

Suppliers of Sediment Control Equipment

There are a large number of companies that supply sediment control equipment listed in Outdoor Design Source and the Yellow Pages. While we do not necessarily endorse any particular company or product we thought it useful to list some company details as a starting point for you:

Total Erosion and Pollution ph: 02 9524 0155

GSE Lining Technology ph: 02 9821 2977

Hardware House

Maccaferri Pty Ltd ph: 02 9648 3800

Mulch Mat Products ph: 02 9905 5344

Naturelink Environmental ph: 02 4578 4588

Polyfabrics Australia Pty Ltd ph: 02 9829 5599

Spraygrass Landscapes ph: 02 9627 4352

Remember:

Everyone has a responsibility to protect the environment. The site supervisor is required to make sure that all workers, including sub-contractors are doing the right thing and all workers are required to notify their supervisors and Council if they see pollution occurring.

It is illegal for any substance other than rainwater to enter the stormwater system. If you do have an accident and pollution occurs you are required by law to notify the Council so that they can work with you to minimise any harm to the environment.

Penalties for polluting the stormwater system range from $750 on the spot fines to $1 million and seven years in gaol. Both companies and individuals can be fined.

Council Officers and the EPA enforce the environmental legislation and do routine inspections of building sites. They can issue notices to make companies clean up sites, change the way they are managing the sites and if necessary, cease work. They will attempt to work with you but penalties will be issued if a satisfactory environmental outcome is not achieved.

List of fact sheets available from Council:

1. Diversion of Upslope Water
2. Dust Control
3. Early installation of Roof Drainage
4. Excavation Pump Out
5. Protected Concrete, Brick and Tile Cutting
6. Protected Concrete Delivery
7. Protected Service Trenches
8. Protected Stockpiles
9. Protected Wash Areas
10. Protected Waste Management and Chemical Storage
11. Protecting Vegetation
12. Protection of Gutter and Street Stormwater Drains
13. Protection of Site Stormwater Pits
14. **Sediment Controls**
15. Soil and Water Management Plans
16. Stabilised Site Access

For further information on preventing pollution from building and construction sites contact your local council:

'Do it right on site' is funded by the Natural Heritage Trust and the Southern Sydney Regional Organisation of Councils – Bankstown, Botany Bay, Canterbury, Hurstville, Kogarah, Marrickville, Randwick, Rockdale, South Sydney, Sutherland Shire, Waverley and Woollahra.

THE DRAIN IS JUST FOR RAIN

Southern Sydney Regional Organisation of Councils

APPENDIX F: UFP PROFORMA

Unexpected Findings Protocol Form

Site: **Job reference:**

Client:

Personnel Onsite: **Date:**

Daily Summary

1. Unexpected Ordinance encountered during daily activities _____
   (if **yes** complete **3** - **9** see **page 2** and **page 3** for specific information and procedure).
2. Fill or suspect material encountered during daily activities _____
   (if **yes** compete **3** - **9**).
3. Environmental consultant contacted: _____
4. Record location of foreign material (label occurrences sequentially 1, 2, 3, etc).

Description of material encountered:

5. Asbestos or suspected asbestos containing material present (Yes/No): _____
6. If No to 4 is there an obvious odour present (Note: Do Not sniff soil) (Yes/No): _____
7. Visible staining (Yes/No): _____
8. Brief written description:

9. Material quarantined (Yes/No): _____
10. Location of contaminated material: _____
11. Attach photographs taken _____

Signature: _____

ENVIRONMENTAL EARTH SCIENCES
CONTAMINATION RESOLVED

Unexploded Ordnance Findings Proforma

Department of Defence provides the following process to manage UXO findings.

1. If a suspect UXO item is found – **DO NOT TOUCH,** disturb or tamper with the item in any way. This includes making any attempt to move the item to a "safe" location.

2. Carefully note the appearance of the item and the location. Take a photograph if it is possible to do so without further approaching or disturbing the item.

3. If possible, mark the location so that it can be found later. Coloured tape or paint make easily recognised marker material. Note the route to the item.

4. Inform the property owner, park ranger, prime contractor, site foreman or supervisor of the find.

5. Inform the NSW Police that a possible ammunition item has been found. They will instigate a request for Department of Defence personnel to attend and dispose of the item.

The following check list is supplied to ensure appropriate records of potential UXO are retained.

Item	Yes	No	Comment
Photograph of potential UXO taken?	☐	☐	
Has the location of potential UXO been marked?	☐	☐	
Site owner, foreman or supervisor informed of potential UXO?	☐	☐	
Have NSW Police been contacted?	☐	☐	
Emergency Services and Defence attended site?	☐	☐	
UXO confirmed and destroyed?	☐	☐	

Provide a brief summary of the potential UXO find and response.

APPENDIX G: UXO INFORMATION

Chris Newland

From: Chris Newland
Sent: Monday, 29 October 2018 10:13 AM
To: 'Luke Wilson'
Subject: RE: Lighthorse Interchange Business Hub - Contamination Report

Hi Luke

As per your email and our discussion last Friday, I'll update the report (ref: 118069_V1; 2 Aug 2018) report to include the following:

- Findings and recommendations on UXO undertaken by JBS&G
- Precluding AFFFs as chemicals of concern for the site based upon historical info, and as such PFAS chemicals not being tested
- Objective to satisfy SEAR condition on for contamination.

One further query, will you need an update of the first Lighthorse report as well? (ref: 117102_V2; 17 Feb 2018).

cheers
Chris

From: Luke Wilson <Luke.Wilson@wspt.nsw.gov.au>
Sent: Thursday, 25 October 2018 2:14 PM
To: Chris Newland <cnewland@eesigroup.com>
Subject: Lighthorse Interchange Business Hub - Contamination Report

Hi Chris,

As discussed, we are expecting the Secretary's Environmental Assessment Requirements (SEARs) from DP&E around 5th November. Once received I will send across to you so reference can be made to it, such as "this report by EES addresses SEARs issue no.xx *contamination* for SSD 9667".

In your updated report, please also consider the potential for PFAS contamination at the site.

Finally, could we also have a statement within the report, confirming that UXO is not considered a concern as per the below advice from JBS&G.

Thanks mate.

Regards

Luke Wilson | Project Manager
Parramatta Park & Western Sydney Parklands Trusts
M: 0400 506 926 P: 02 9895 7500 | F: 02 9895 7580
A: Level 7, 10 Valentine Avenue, Parramatta, NSW 2150
P: PO Box 3064 Parramatta NSW 2124
W: www.parrapark.com.au | www.westernsydneyparklands.com.au
Facebook: /parrapark | /westernsydneypark
Twitter: @parrapark | @westernsydpark



From: Katie Linz [mailto:KLinz@jbsg.com.au]
Sent: Tuesday, 11 September 2018 3:09 PM
To: Luke Wilson <Luke.Wilson@wspt.nsw.gov.au>
Subject: RE: Lighthorse UXO Enquiry

Hi Luke,

I have been informed that Defence won't add or amend their disclaimer. If the Lot on Plan is not on the Defence UXO website, the Client can be reasonably confident that there is not an UXO risk. Defence tend to err on the side of caution.

Please let us know if you require anything further.
Regards,

Katie

Please note I am available in the office Tuesday to Friday

Katie Linz | Associate| JBS&G
Sydney | Melbourne | Adelaide | Perth | Brisbane | Canberra | Darwin | Wollongong
Level 1, 50 Margaret Street Sydney NSW 2000
T: 02 8245 0300 | M: 0422 913 638| E: klinz@jbsg.com.au | W: www.jbsg.com.au
Contaminated Land | Groundwater Remediation | Environmental Approvals | Auditing and Compliance | Hygiene and Hazardous Materials | Due Diligence and Liability | Stakeholder and Risk Management

This email message is intended only for the addressee(s) and contains information that may be confidential and/or copyright. If you are not the intended recipient please delete this email
immediately. Use, disclosure or reproduction of this email by anyone other than the intended recipient(s) is strictly prohibited. No representation is made that this email or any attachments
are free of viruses and the recipient is responsible for undertaking appropriate virus scanning. Any advice provided in or attached to this email is subject to limitations.

From: Luke Wilson <Luke.Wilson@wspt.nsw.gov.au>
Sent: Tuesday, 11 September 2018 8:57 AM
To: Katie Linz <KLinz@jbsg.com.au>
Subject: RE: Lighthorse UXO Enquiry

Thanks Katie,

Just for clarity I'm not after a desktop study just after contact to be made with DoD to confirm that there is no UXO potential.

Regards

Luke Wilson | Project Manager
Parramatta Park & Western Sydney Parklands Trusts
M: 0400 506 926 P: 02 9895 7500 | F: 02 9895 7580
A: Level 7, 10 Valentine Avenue, Parramatta, NSW 2150
P: PO Box 3064 Parramatta NSW 2124

W: www.parrapark.com.au | www.westernsydneyparklands.com.au
Facebook: /parrapark | /westernsydneypark
Twitter: @parrapark | @westernsydpark



From: Katie Linz [mailto:KLinz@jbsg.com.au]
Sent: Tuesday, 11 September 2018 8:30 AM
To: Luke Wilson <Luke.Wilson@wspt.nsw.gov.au>
Subject: RE: Lighthorse UXO Enquiry

Hi Luke,

I've asked our UXO specialists if they can complete the review requested and will get back to you as soon as I hear anything.

Regards,

Katie

Please note I am available in the office Tuesday to Friday

Katie Linz | Associate| JBS&G
Sydney | Melbourne | Adelaide | Perth | Brisbane | Canberra | Darwin | Wollongong
Level 1, 50 Margaret Street Sydney NSW 2000
T: 02 8245 0300 | M: 0422 913 638| E: klinz@jbsg.com.au | W: www.jbsg.com.au
Contaminated Land | Groundwater Remediation | Environmental Approvals | Auditing and Compliance | Hygiene and Hazardous Materials | Due Diligence and Liability | Stakeholder and Risk Management

This email message is intended only for the addressee(s) and contains information that may be confidential and/or copyright. If you are not the intended recipient please delete this email
immediately. Use, disclosure or reproduction of this email by anyone other than the intended recipient(s) is strictly prohibited. No representation is made that this email or any attachments
are free of viruses and the recipient is responsible for undertaking appropriate virus scanning. Any advice provided in or attached to this email is subject to limitations.

From: Luke Wilson <Luke.Wilson@wspt.nsw.gov.au>
Sent: Monday, 3 September 2018 9:04 AM
To: Katie Linz <KLinz@jbsg.com.au>
Subject: FW: Lighthorse UXO Enquiry

Hi Katie,

This is great. I looked up the site and it does not reflect any risk of UXO for our lots. However, to fully cover this off, could you please check with relevant government body (Dept of Defence?) on behalf of the Trust. See below note in disclaimer.

Disclaimer

UXO

The data supplied is based on Defence's assessment of information obtained from a variety of sources. It does not reflect any UXO remediation conducted on behalf of any person or organisation other than Defence. While Defence makes all reasonable efforts to ensur that the information provided is accurate, complete and up-to-date, there may be limitations to the sources available to Defence and the information may be subject to change. The information relating to a specific parcel of land should not be relied upon without additional checks and/or verification from the relevant state, territory or local government.

UXO: IS070500: UXO Risk Areas 3.1 Update

Thanks again and happy for you to invoice on hourly rate for the above.

Regards

Luke Wilson | Project Manager
Parramatta Park & Western Sydney Parklands Trusts
M: 0400 506 926 P: 02 9895 7500 | F: 02 9895 7580
A: Level 7, 10 Valentine Avenue, Parramatta, NSW 2150
P: PO Box 3064 Parramatta NSW 2124
W: www.parrapark.com.au | www.westernsydneyparklands.com.au
Facebook: /parrapark | /westernsydneypark
Twitter**:** @parrapark | @westernsydpark



From: Katie Linz [mailto:KLinz@jbsg.com.au]
Sent: Friday, 31 August 2018 11:17 AM
To: Luke Wilson <Luke.Wilson@wspt.nsw.gov.au>
Subject: Lighthorse UXO Enquiry

Hi Luke,

If you enter the Lot on Plan detail in the Department of Defence Web Site this would be a good starting point:

http://www.defence.gov.au/UXO/Where/Default.asp

The Web Site will indicate an initial Defence assessment, but will not indicate if there has been previous remediation.

Let me know how you go and if you would like a more detailed review of the site works I can get you a price across.

Regards,
Katie

Please note I am available in the office Tuesday to Friday

Katie Linz | Associate| JBS&G
Sydney | Melbourne | Adelaide | Perth | Brisbane | Canberra | Darwin | Wollongong
Level 1, 50 Margaret Street Sydney NSW 2000
T: 02 8245 0300 | M: 0422 913 638| E: klinz@jbsg.com.au | W: www.jbsg.com.au
Contaminated Land | Groundwater Remediation | Environmental Approvals | Auditing and Compliance | Hygiene and Hazardous Materials | Due Diligence and Liability | Stakeholder and Risk Management

This email message is intended only for the addressee(s) and contains information that may be confidential and/or copyright. If you are not the intended recipient please delete this email
immediately. Use, disclosure or reproduction of this email by anyone other than the intended recipient(s) is strictly prohibited. No representation is made that this email or any attachments
are free of viruses and the recipient is responsible for undertaking appropriate virus scanning. Any advice provided in or attached to this email is subject to limitations.

UXO Search information: Department of Defence UXO Search (undertaken 28 November 2019)

