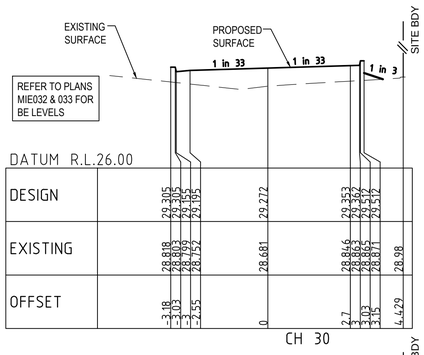

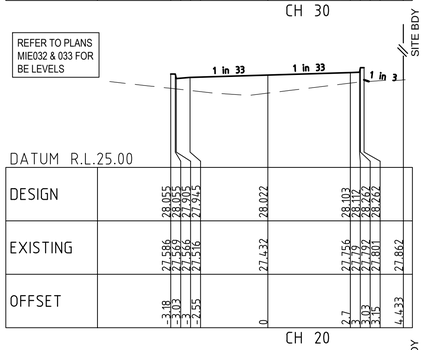

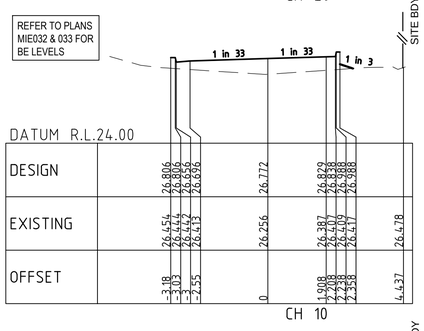

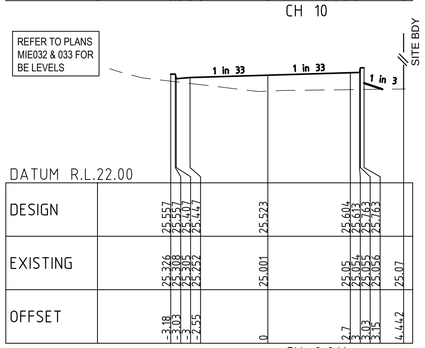

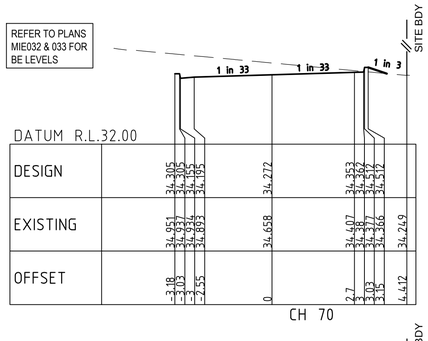

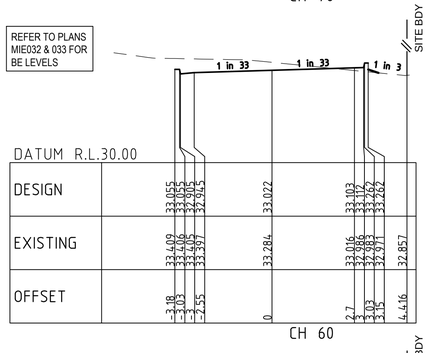

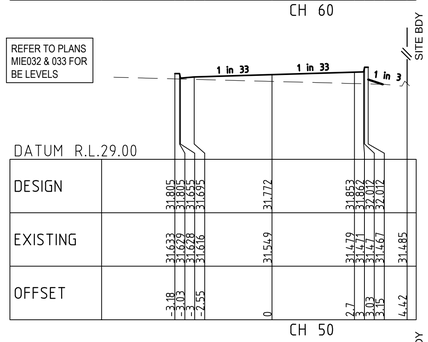

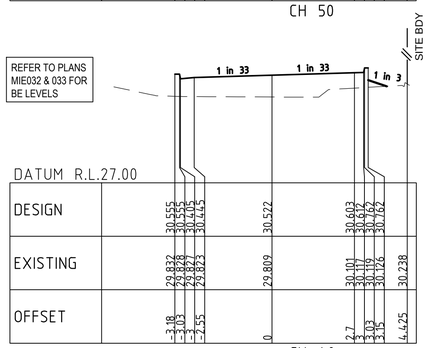

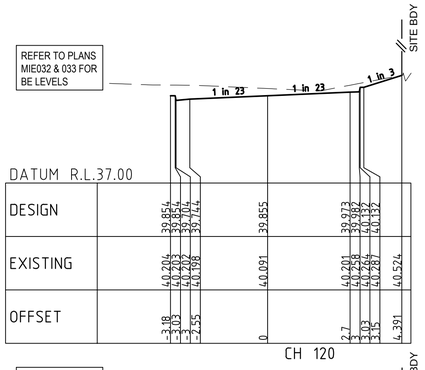

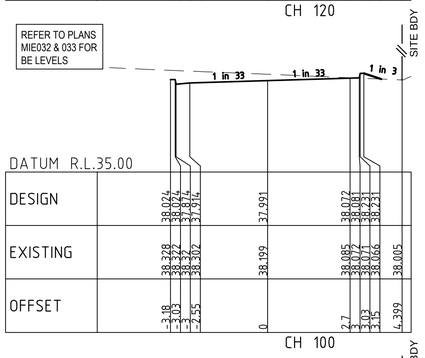

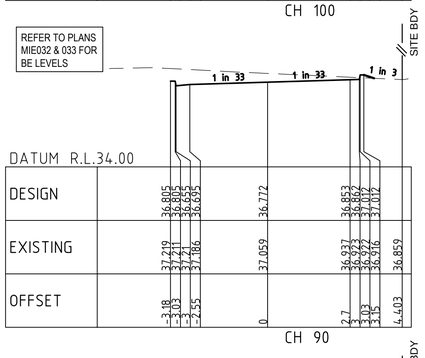

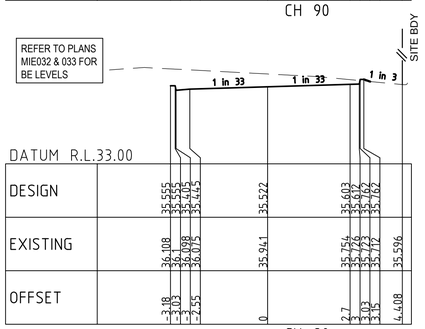

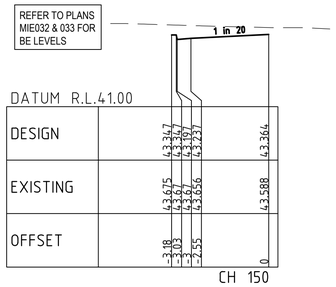

GAS LOCATION & DEPTH TO BE CONFIRMED PRIOR TO CONSTRUCTION (TYPICALLY 1.0m OFFSET TO SITE BOUNDARY & 0.9m COVER

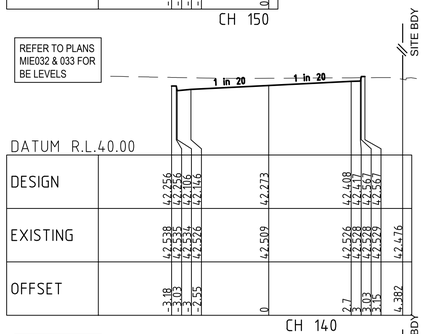

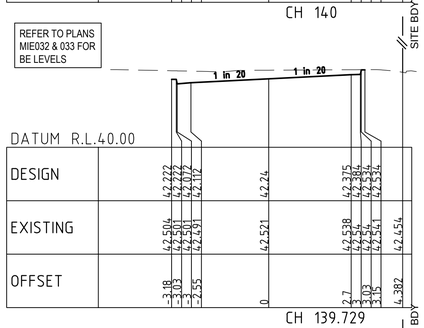

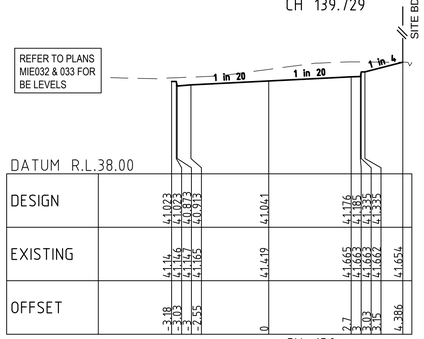

REV	DESCRIPTION	BY	APP	DATE
00	ISSUED FOR CONSTRUCTION CERTIFICATE	RL	DB	31-05-12
01	ISSUED FOR CONSTRUCTION CERTIFICATE	RL	DB	15-06-12
02	START CHAINAGE REVISED TO SUIT NEW ARCHITECTURAL	VC	DB	17-12-12

FRASERS PROPERTY

MEINHARDT INFRASTRUCTURE & ENVIRONMENT

Level 4, 66 Clarence Street
Sydney NSW 2000
Telephone: (02) 9699 3088
Fax: (02) 9319 7508
www.meinhardtgroup.com
A.C.N. 051 627 591
©Copyright

CLIENT: FRASERS PUTNEY PTY LTD
-

DESIGNED	DRAWN	APPROVED	SCALE @ A1
LC	LC	DB	1:100

STATUS: FOR CONSTRUCTION CERTIFICATE

PROJECT: PUTNEY HILL RESIDENTIAL DEVELOPMENT
600 VICTORIA ROAD, RYDE
STAGE 1 PHASE 1

NORTH

TITLE: ROAD CROSS SECTIONS ROAD NO 12
SHEET 1
-

PROJECT No: 104479-10-
DRAWING No: MIE076
REV: 02

DWG FILE: C:\Documents and Settings\MEINHARDT\local settings\temp\AcPublish_1932\104479-10-MIE076.dwg - MH PLOT TIME: 17 Dec 2012, 5:17pm