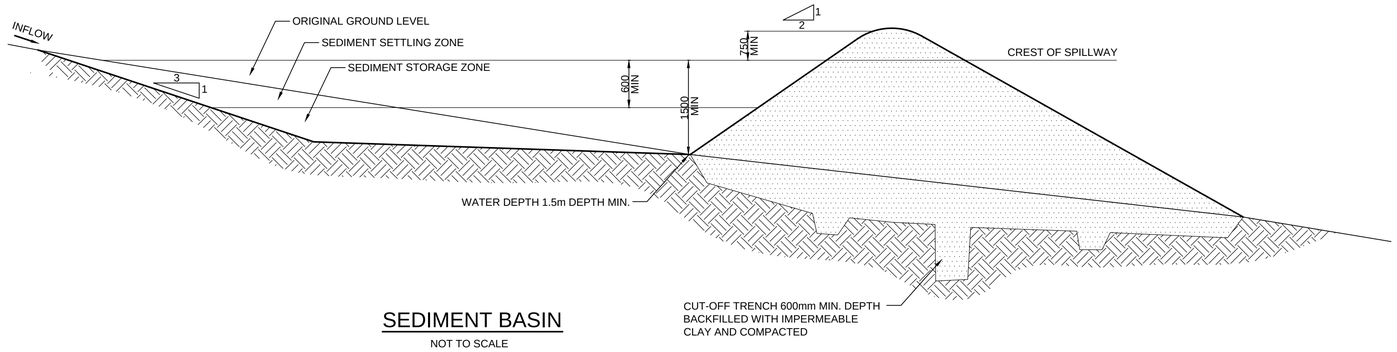

SEDIMENT BASIN

NOT TO SCALE

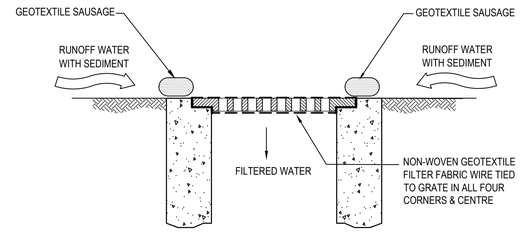

GRAVEL SAUSAGE SURFACE INLET TRAP

SCALE N.T.S.

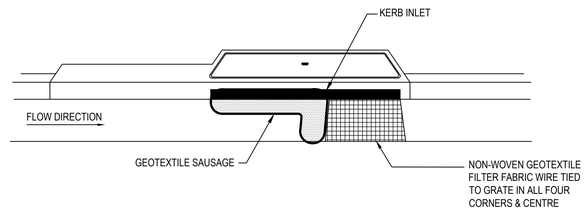

GRAVEL SAUSAGE KERB INLET TRAP

SCALE N.T.S.

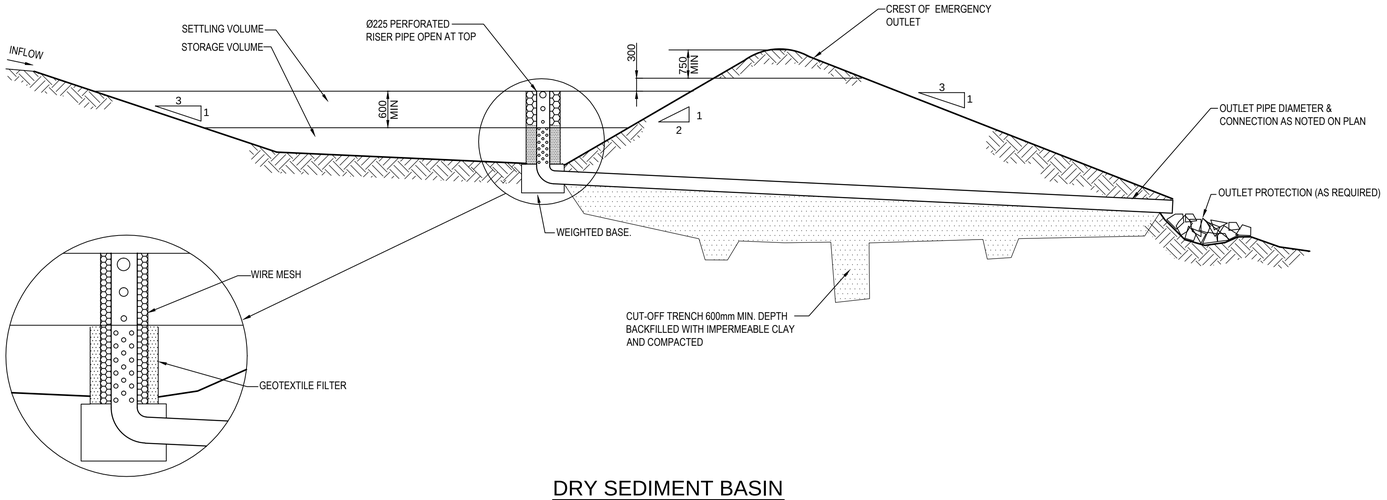

DRY SEDIMENT BASIN

NOT TO SCALE

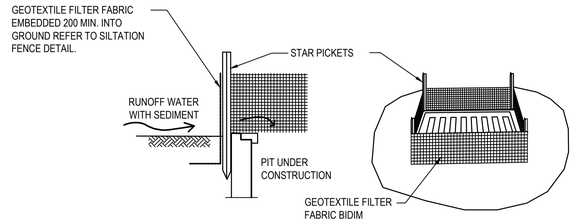

GEOTEXTILE FILTER PIT SURROUND DETAIL

NOT TO SCALE

REV	DESCRIPTION	BY	APP	DATE
00	ISSUED FOR PLANNING APPLICATION	RL	DB	12-12-11

FRASERS PROPERTY

MEINHARDT INFRASTRUCTURE & ENVIRONMENT

Level 4, 66 Clarence Street
Sydney NSW 2000
Telephone: (02) 9699 3088
Fax: (02) 9319 7508
www.meinhardtgroup.com
A.C.N. 051 627 591
© Copyright

CLIENT: FRASERS PUTNEY PTY LTD
--

DESIGNED	DRAWN	APPROVED	SCALE @ A1
LD	RL	PD	AS SHOWN

STATUS: PLANNING APPLICATION
NOT FOR CONSTRUCTION

PROJECT: PUTNEY HILL RESIDENTIAL DEVELOPMENT
CHARLES STREET, RYDE
-

NORTH

TITLE: EROSION & SEDIMENT CONTROL DETAILS SHEET 2
-

PROJECT No: 104479-05- MIE033

DRAWING No:

REV: 00

DWG FILE: X:\104479 - Putney Green (Frasers)\BIM\6.3 MHT MIE\6.3.2 MHT INF\Section 75W - STAGE 05 - Stage 1A\104479-05-MIE033.dwg - MH PLOT TIME: 13 Dec 2011, 2:46pm