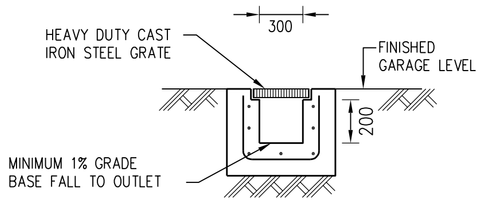

GRATED TRENCH DRAIN

SCALE: 1:20

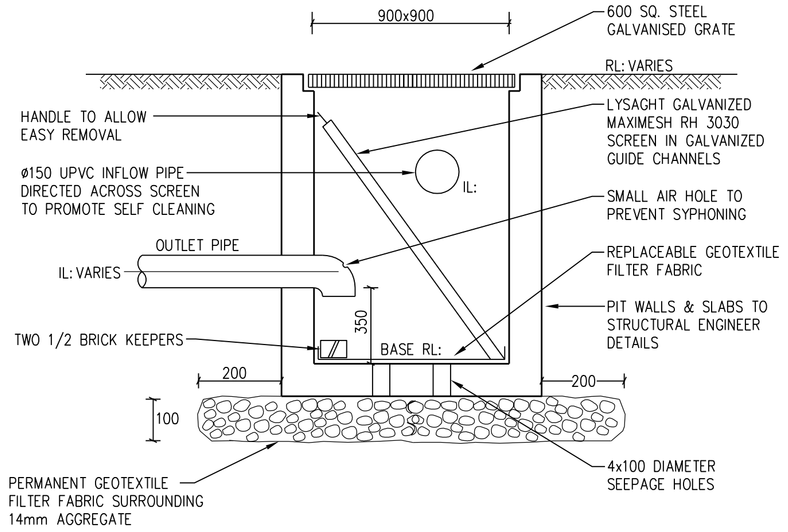

SILT / LITTER ARRESTOR PIT

SCALE: 1:20

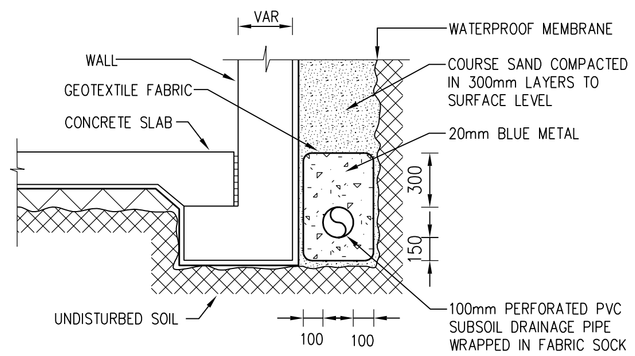

SUBSOIL DRAINAGE

SCALE: 1:20

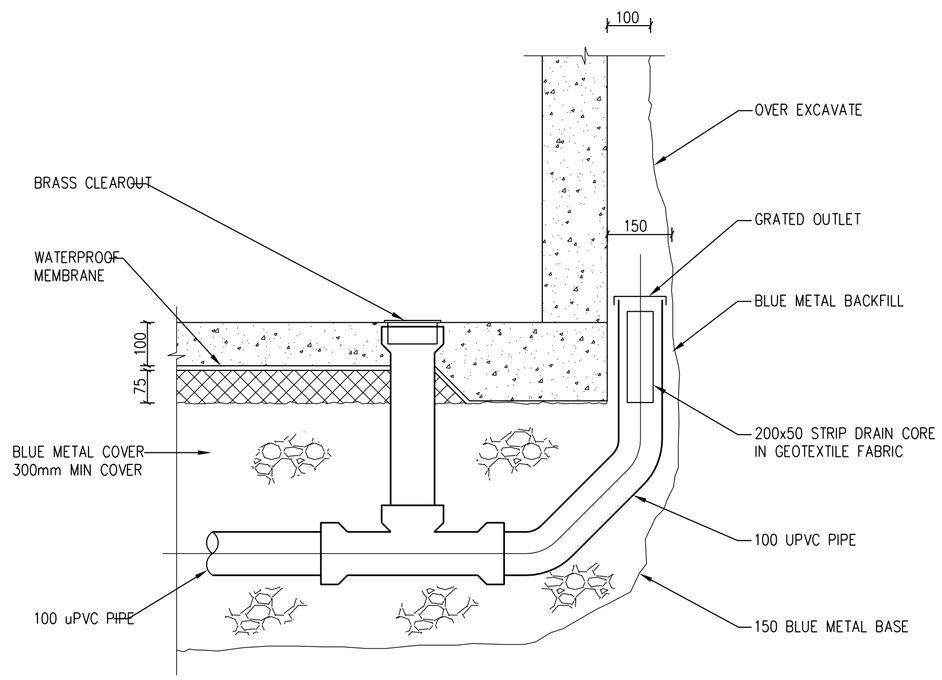

PERIMETER WALL SUBSOIL DRAINAGE

SCALE: 1:10

AMENDMENTS/REVISIONS

Rev	Issue	Description	Initials	Date
01		D.A SUBMISSION	MT	16.02.11

CONSULTANT

Cardno ITC

Shaping the Future

SYDNEY
BRISBANE
CANBERRA
MELBOURNE
PERTH

Cardno ITC Pty. Limited
LEVEL 7, 33 YORK STREET
SYDNEY NSW 2000
Phone: + 61 2 9495 8100
Fax: + 61 2 9495 8111
Email: sydney.itc@cardno.com.au
www.cardnoitc.com.au

CLIENT

BILLBERGIA
Level 2, 25 Angas St
Meadowbank
NSW

Billbergia
creating possibilities

SJB Architects

Level 2
490 Crown Street
Surry Hills NSW
2010 Australia
T 61 2 9380 9911
F 61 2 9380 9922
www.sjb.com.au

PROJECT

40 Walker St
Rhodes
Stages 2A & 3A

DRAWING TITLE

HYDRAULIC SERVICES
STORMWATER
DETAILS

DRAWN	DESIGNED	CHECKED	SCALE (AT FULL SIZE)
M.T.	M.T.	M.T.	1:500

DATE	DRAWING No.	REVISION
Oct '10	N10957-STW-H04	01

A1

Feb 17, 2011 - 12:26pm I:\Customer Register\40 Walker St, Rhodes - Stages 2A & 3A - N10957\CAD\N10957-STW-H04.dwg