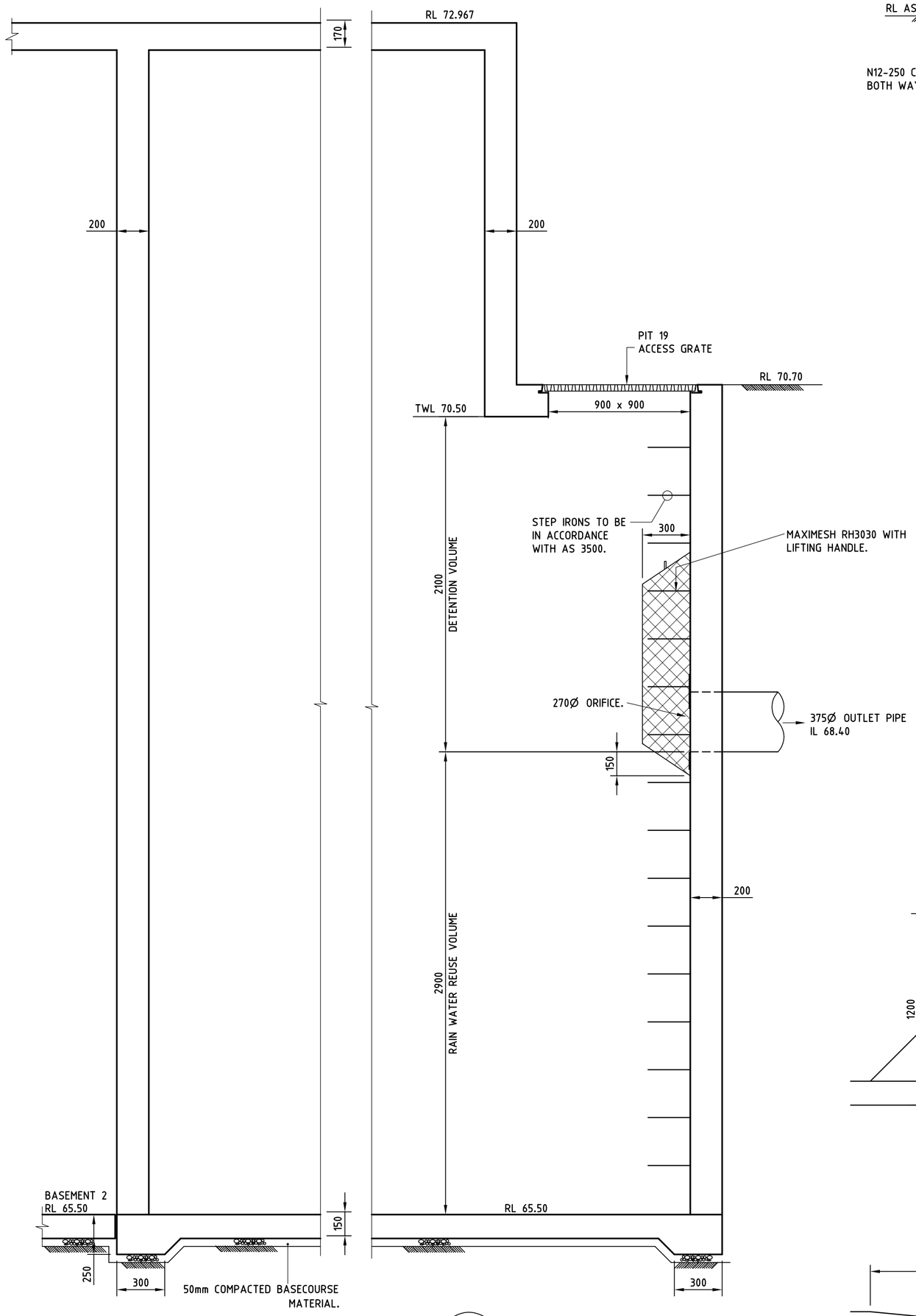

SECTION 1/2001

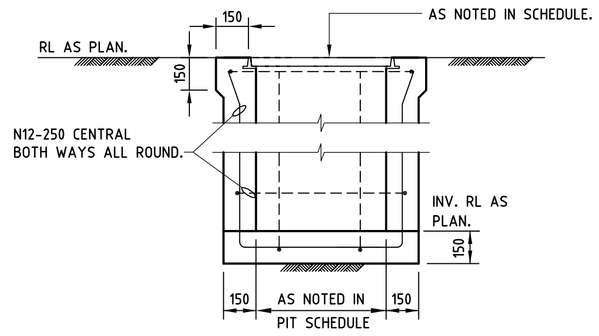

TYPICAL PIT DETAIL

PIT SCHEDULE

PIT No.	PIT SIZE	
1	450 x 450	CLASS 'C' GRATE
2	600 x 600	CLASS 'C' GRATE
3	450 x 450	CLASS 'C' GRATE
4	900 x 900	CLASS 'C' GRATE
5	450 x 450	CLASS 'C' GRATE
6	900 x 900	CLASS 'C' GRATE
7	900 x 900	CLASS 'C' GRATE
8	450 x 450	CLASS 'C' GRATE
9	450 x 450	CLASS 'C' GRATE
10	600 x 600	CLASS 'C' GRATE
11	450 x 450	CLASS 'C' GRATE
12	KIP	CLASS 'C' GRATE
13	600 x 600	CLASS 'B' GRATE
14	600 x 600	CLASS 'B' GRATE
15	600 x 600	CLASS 'B' GRATE
16	600 x 600	CLASS 'B' GRATE
17	600 x 600	CLASS 'B' GRATE
18	600 x 600	CLASS 'C' GRATE
19	900 x 900	CLASS 'B' GRATE
20	Ø 1000	CLASS 'C' COVER
21	450 x 450	CLASS 'B' GRATE
22	450 x 450	CLASS 'B' GRATE
23	600 x 600	CLASS 'B' GRATE
24	600 x 600	CLASS 'B' GRATE
25	600 x 600	CLASS 'B' GRATE
26	Ø 1000	CLASS 'C' COVER
27	KIP	CLASS 'C' GRATE
28	KIP	CLASS 'C' GRATE
29	900 x 900	CLASS 'B' GRATE

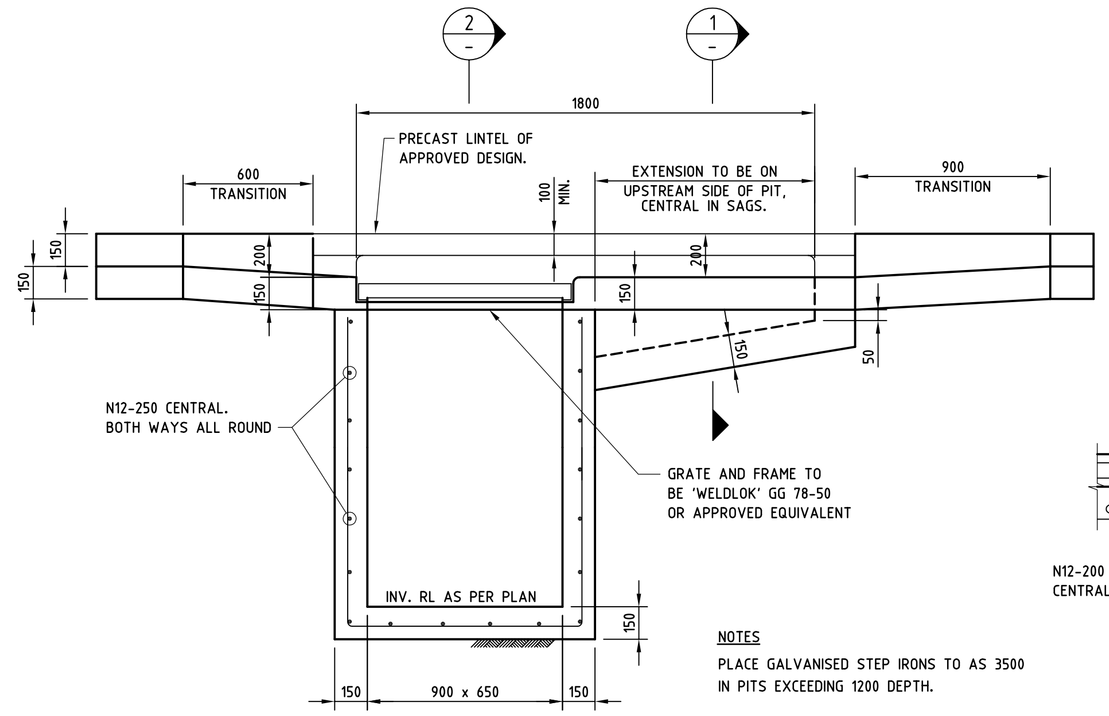

NOTES

PLACE GALVANISED STEP IRONS TO AS 3500 IN PITS EXCEEDING 1200 DEPTH.

KERB INLET PIT (KIP) DETAIL

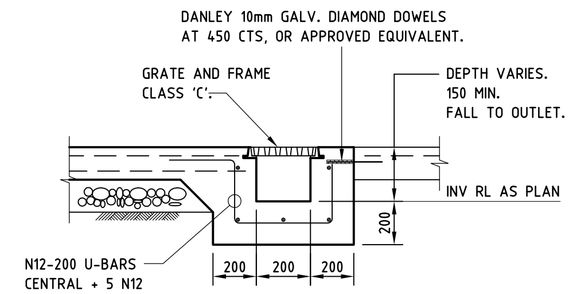

GRATED DRAIN DETAIL

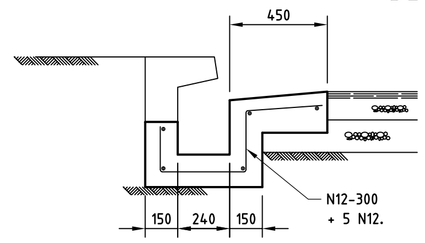

SECTION 1/-

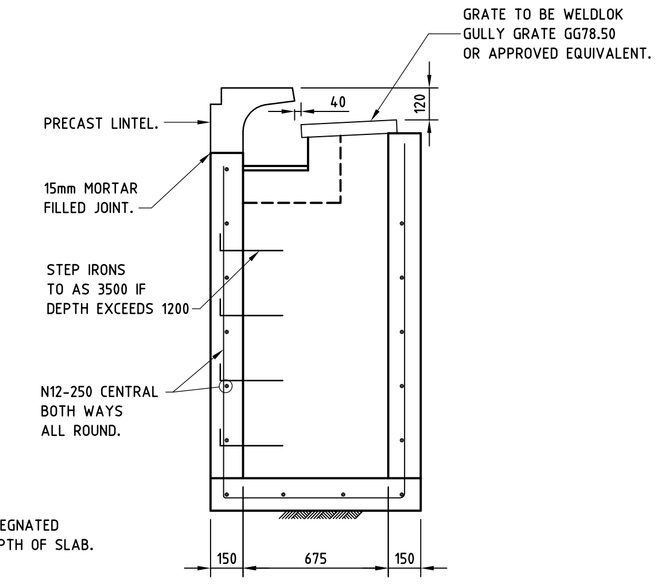

SECTION 2/-

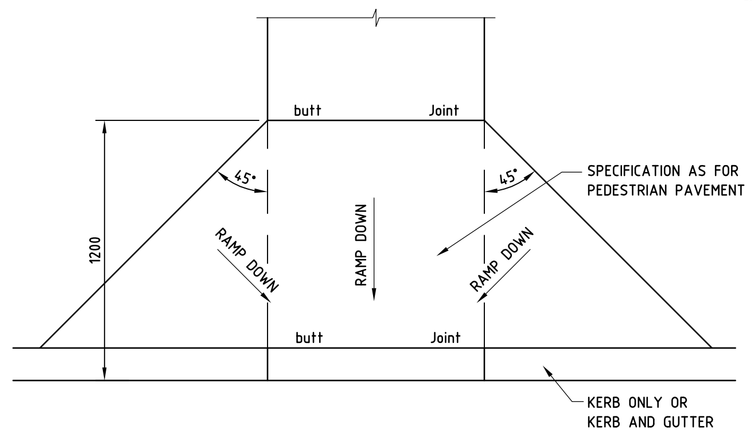

PLAN

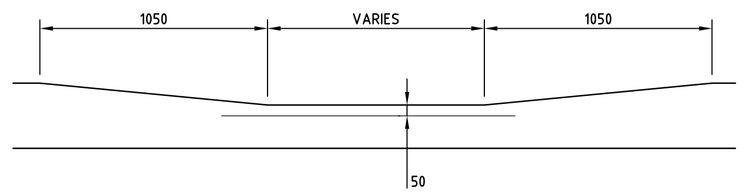

ELEVATION.

DETAIL - PEDESTRIAN LAYBACK. (PRAM RAMP)

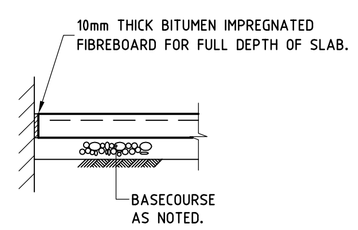

BUTT JOINT

NOTE: TO BE PROVIDED WHEN PAVEMENT ABUTS ALL WALLS AND BUILDINGS.

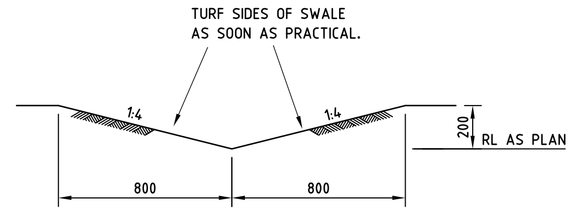

SWALE DETAIL

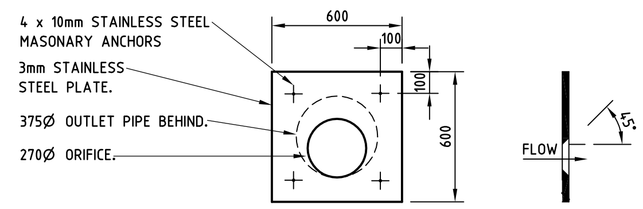

DETAIL - ORIFICE PLATE

SCALE 1:20

REFERENCE DRAWINGS:

FOR STANDARD NOTES AND LEGEND REFER TO DRG. No. AHH-CIV-AD_00_001

PRELIMINARY

AUSTRALIAN HEARING HUB MACQUARIE UNIVERSITY

AMENDMENTS		
REV	DATE	AMENDMENT	BY
A	13.05.10	ISSUED FOR PROJECT APPLICATION.	SETB

NOTE:
1) THESE DRAWINGS ARE TO BE READ IN CONJUNCTION WITH ALL OTHER WORKING DRAWINGS, SCHEDULES, SPECIFICATIONS AND OTHER INFORMATION PROVIDED.
2) DO NOT OBTAIN DIMENSIONS BY SCALING FROM THESE DRAWINGS.
3) ALL DIMENSIONS TO BE VERIFIED ON SITE PRIOR TO PREPARATION OF SHOP DRAWINGS.

Structural And Civil Engineer

Woolacotts. Consulting Engineers

Woolacott Hale Corlett & Jumble Consulting Engineers Pty Ltd
A.C.N. 003 791 820
24 Broughton Rd.
Artarmon NSW
Telephone (02) 9413 1399
Facsimile (02) 9413 1132
E-mail office@woolacotts.com.au

This drawing is Copyright and must not be used, reproduced or copied wholly or in part without written permission of Woolacott Hale Corlett & Jumble Consulting Engineers Pty. Ltd.

JOB No.	Approved	Verified	Prepared
09-181			

ARCHITECTURAL
PERUMAL PEDAVOLI ARCHITECTS
T +61 2 9291 0000
F +61 2 9291 0088

PERUMAL PEDAVOLI ARCHITECTS

MACQUARIE UNIVERSITY

PROJECT MANAGER
COFFEY PROJECTS
T +61 2 9287 2100
F +61 2 9287 2188

ELECTRICAL & COMMUNICATIONS
JHA CONSULTING ENGINEERS
T +61 2 9437 1000
F +61 2 9437 1020

HYDRAULIC

INTERIOR DESIGNER
GEYER
T +61 2 9248 3222

CIVIL & STRUCTURAL
WOOLACOTTS CONSULTING ENGINEERS
T +61 2 9413 1399
F +61 2 9413 1132

MECHANICAL
ERBAS & ASSOCIATES
T +61 2 9437 1022
F +61 2 9437 1025

BCA
CITY PLAN SERVICES
T +61 2 8270 3500
F +61 2 8270 3501

ESD
CUNDALL
T +61 2 8424 7000
F +61 2 8424 7099

AUSTRALIAN HEARING HUB
AT MACQUARIE UNIVERSITY

CIVIL WORKS DETAILS

SCALES (At original)	CONSULTANTS DRAWING REFERENCE NUMBER			
1:20				
DESIGNED	DRAFTED	VERIFIED	TRUE NORTH	DATE MAR 2010

DRAWING NUMBER					REVISION
PROJECT CODE	DISCIPLINE CODE	PHASE CODE	DRAWING TYPE	SERIES NUMBER	
AHH	- CIV	-AD	_02	_004	A