This drawing is copyright and is the property of TAYLOR THOMSON WHITTING (NSW) Pty Ltd and must not be used without authorisation.

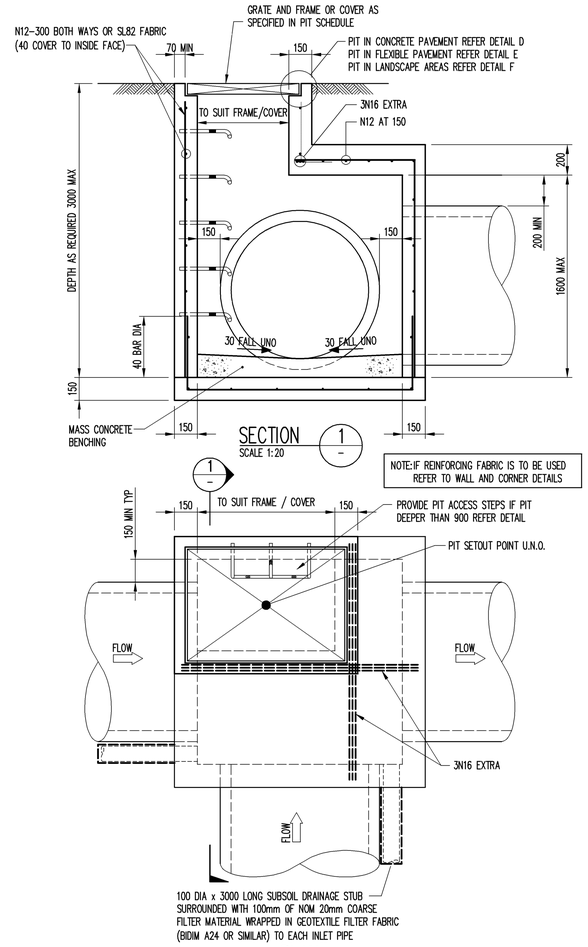

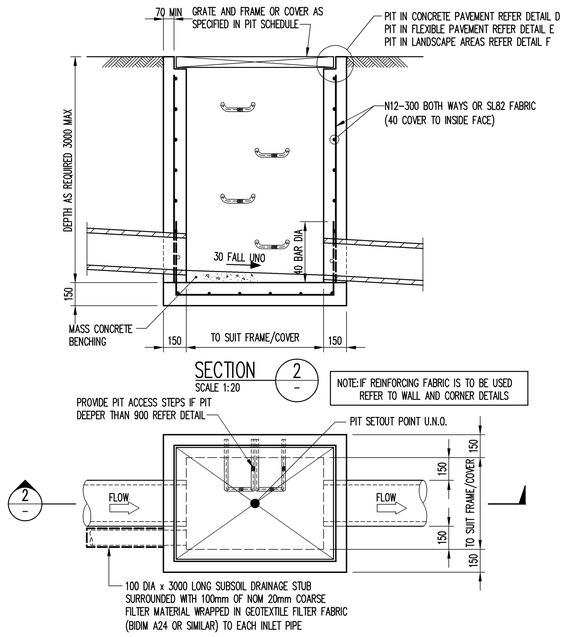

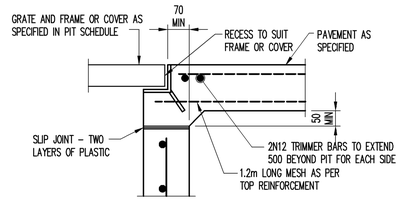

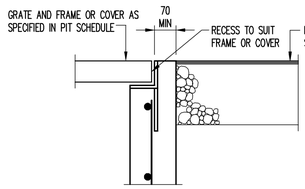

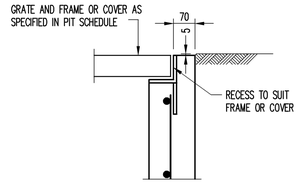

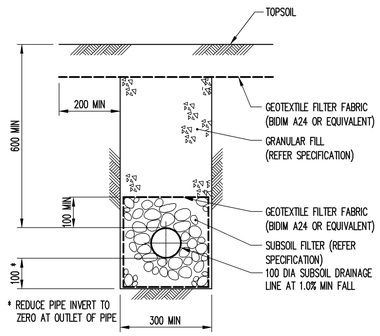

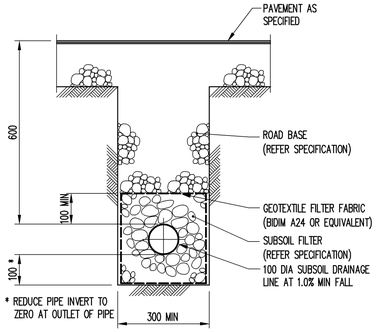

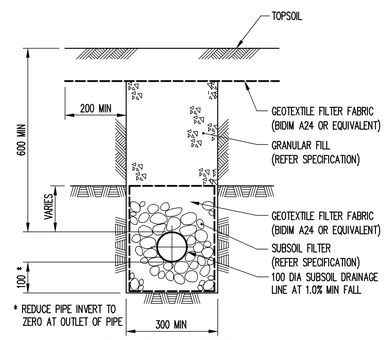

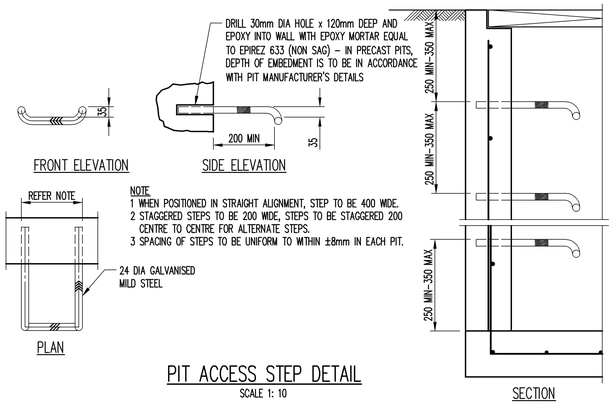

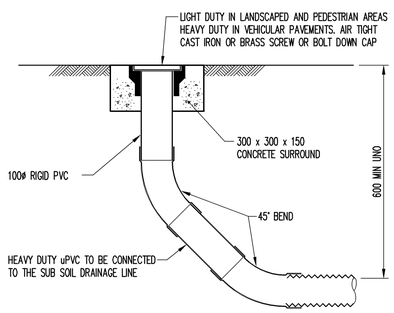

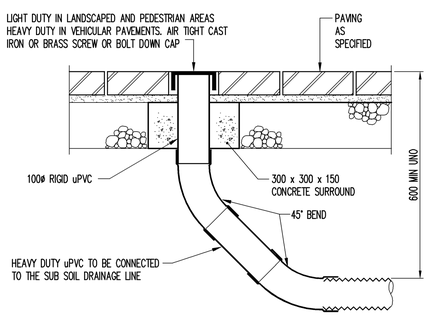

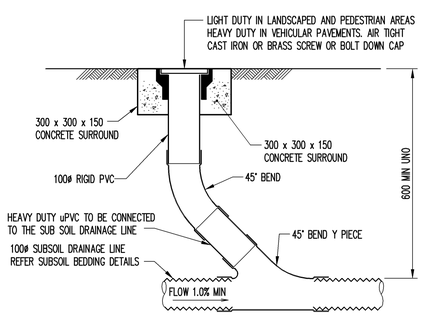

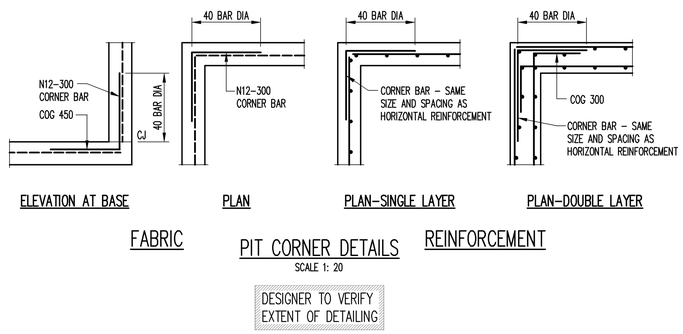

DESIGNER TO VERIFY EXTENT OF DETAILING

ISSUE FOR APPROVAL

FileName: C05.dwg - USER: danielh - Plot File Created: Jun 15, 2010 - 9:53am

A1 0 1 2 3 4 5 6 7 8 9 10

Rev	Description	Eng	Draft	Date
P3	ISSUE FOR EA APPROVAL	CS	DH	15.06.10
P2	PRELIMINARY EA ISSUE	CS	MS	11.06.10
P1	PRELIMINARY ISSUE	CS	DH	15.03.10

Architect
LAHZNIMMO
SUITE 404, FLOURMILL STUDIOS
3 GLADSTONE STREET
NEWTOWN NSW 2042 AUSTRALIA

TaylorThomsonWhitting
Consulting Engineers
48 Chandos Street St.Leonards NSW 2065
T: +61 2 9439 7288 F: +61 2 9439 3148 ttwsyd@ttw.com.au
Taylor Thomson Whitting (NSW) Pty Ltd A.C.N. 113 578 377

Project
UNSW MEDICAL SCIENCES BUILDING
WALLACE WURTH UPGRADE
REDEVELOPMENT

Sheet Subject
DETAILS SHEET 1

Scale : A1	Drawn	Authorised
AS SHOWN	DH	

Job No	Drawing No	Revision
091157	C05	P3

Plot File Created: Jun 15, 2010 - 9:53am