FOR GENERAL NOTES REFER DWG. S0.00

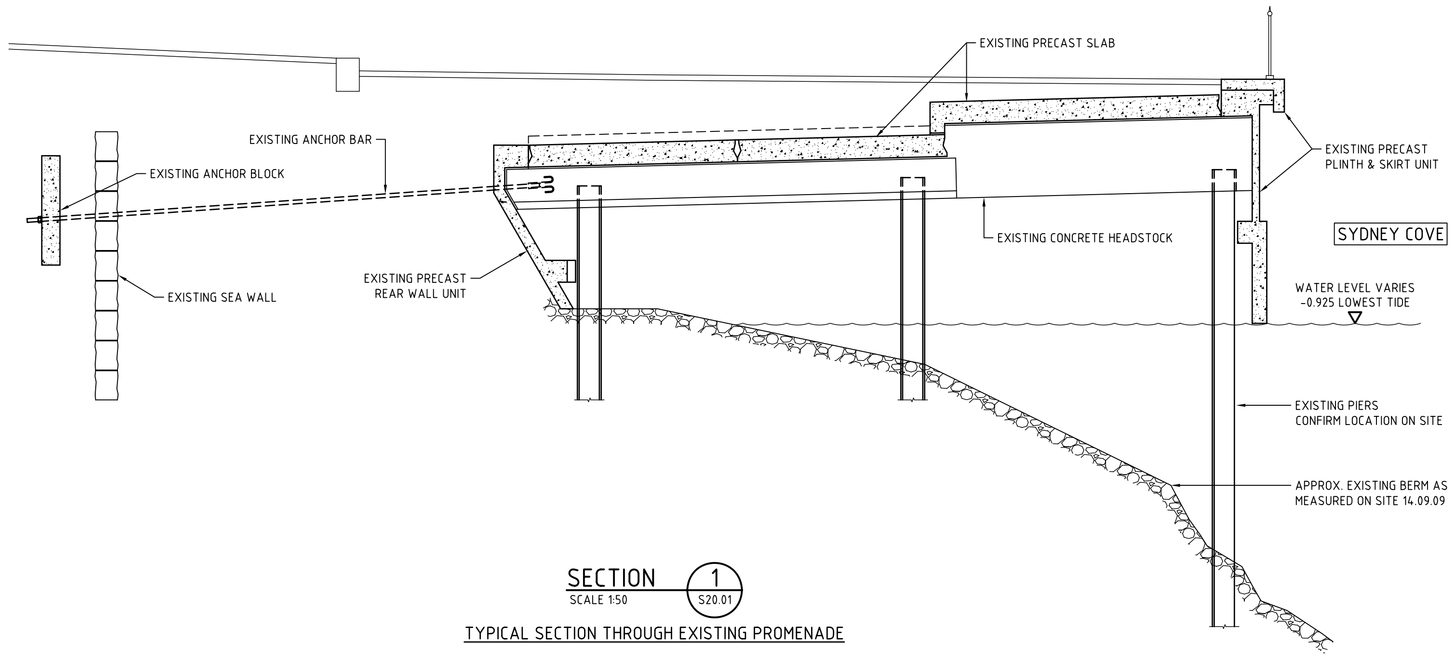

SECTION 1 / S20.01
SCALE 1:50

TYPICAL SECTION THROUGH EXISTING PROMENADE

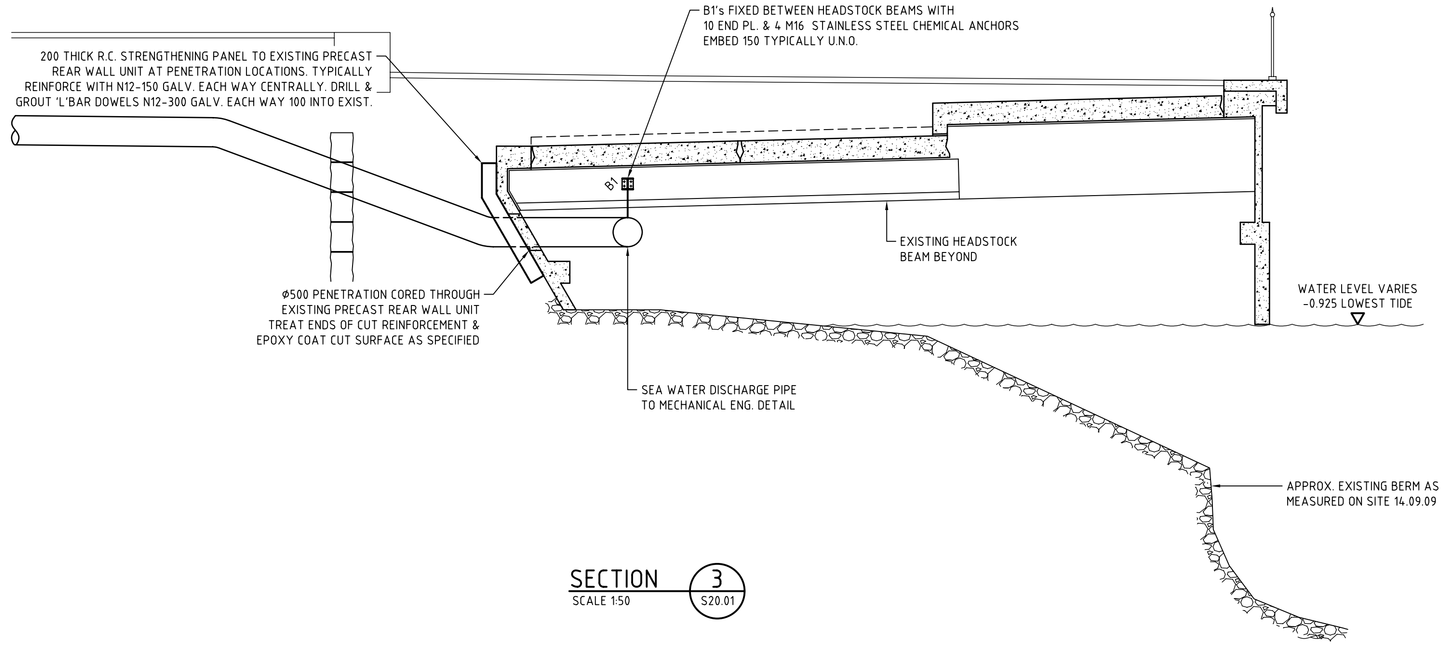

SECTION 3 / S20.01
SCALE 1:50

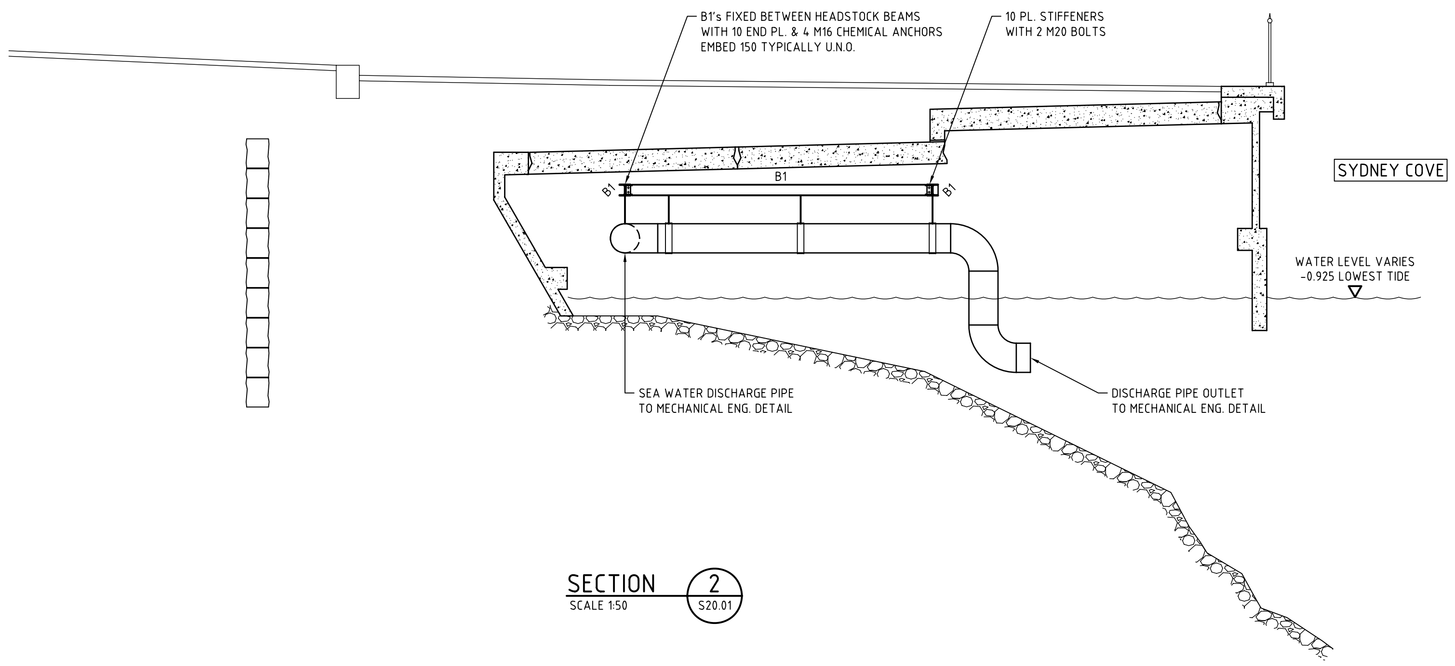

SECTION 2 / S20.01
SCALE 1:50

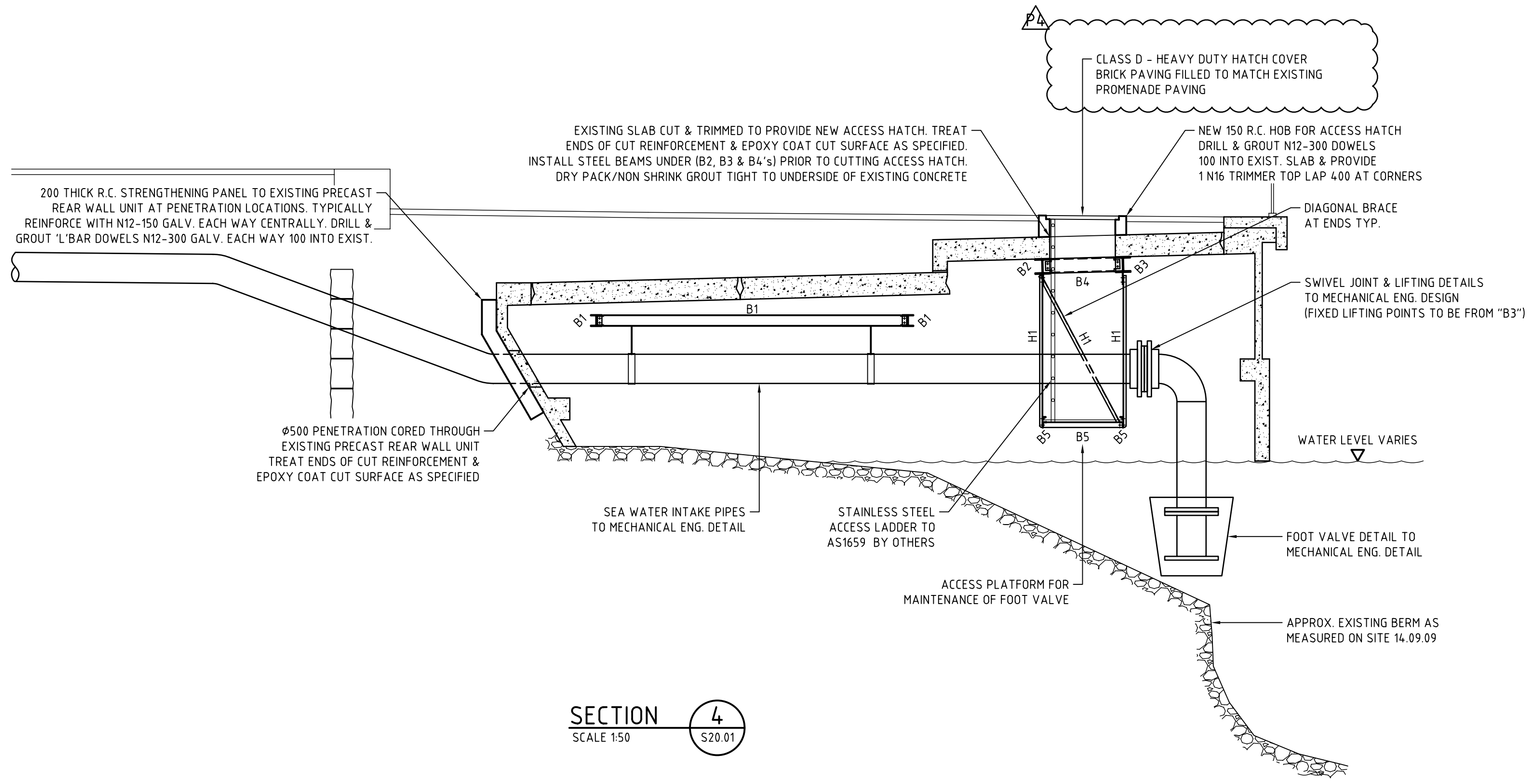

SECTION 4 / S20.01
SCALE 1:50

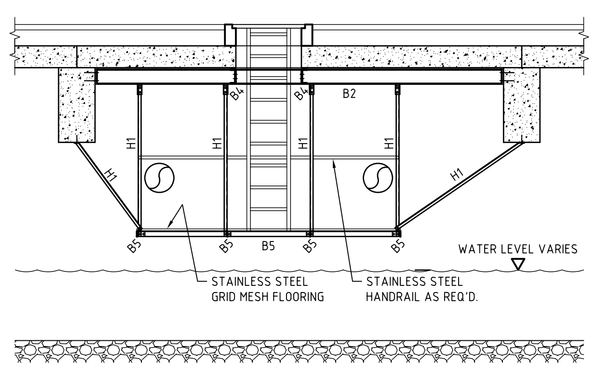

SECTION 5 / S20.01
SCALE 1:50

ISSUE	DATE	DETAILS
P4	19.03.10	B.O.Q.2
P3	09.02.10	ISSUED FOR CO-ORDINATION
P2	22.01.10	B.O.Q.
P1	4.12.09	95% B.O.Q.1

AMENDMENTS

THIS DRAWING IS COPYRIGHT AND MUST NOT BE RETAINED, COPIED OR USED WITHOUT THE EXPRESS AUTHORITY OF SIMPSON DESIGN ASSOCIATES PTY LTD. ONLY USE FIGURED DIMENSIONS - DO NOT SCALE DRAWINGS. ALL DISCREPANCIES TO BE REFERRED TO ENGINEER PRIOR TO CONSTRUCTION.

PROJECT
MCA REDEVELOPMENT

140 GEORGE STREET
CIRCULAR QUAY

SCALE
1:50 @ B1

DRAWING DESCRIPTION
SEAWATER EXCHANGE PROMENADE DETAILS SHEET 1

DRAWING No. & ISSUE
S20.11 | P4

SDA JOB NUMBER: **M8143**
DATE CREATED: **21.09.09**
DESIGNED: **A.S.**
DRAWN: **A.G.B.**
CERTIFIED

KITCHEN CONSULTANT
THE CKC GROUP
CONTACT: PETER MACALUSO
SUITE 8
7 LLOYDS AVENUE
CARLINGFORD NSW 2118
PHONE : 02 9871 0499
FAX : 02 9879 0343
EMAIL : glomac@cherry.com.au

IT CONSULTANT
NEXUS
CONTACT: SEAN MURPHY
1/2 VERONA STREET
PADDINGTON NSW 2021
PHONE : 02 8669 9031
FAX : 02 8669 9091
EMAIL : Sean.murphy@nexusnet.com.au

HYDRAULIC ENGINEER
WARREN SMITH & PARTNERS
CONTACT: GRAHAME BARNES
1ST FLOOR
123 CLARENCE STREET
SYDNEY NSW 2000
PHONE : 02 8234 8617
FAX : 02 9290 1295
EMAIL : grahame@warrensmith.com.au

HERITAGE CONSULTANT
TANNER ARCHITECTS
CONTACT: SCOTT MACARTHUR
52 ALBION STREET
SURRY HILLS NSW 2010
PHONE : 02 9281 4399
FAX : 02 9281 4337
EMAIL : smacarthur@tannerarchitects.com.au

FIRE SERVICES ENGINEER
WARREN SMITH & PARTNERS
CONTACT: DAVID BOLT
1ST FLOOR
123 CLARENCE STREET
SYDNEY NSW 2000
PHONE : 02 8234 8621
FAX : 02 9290 1295
EMAIL : david@warrensmith.com.au

ELECTRICAL & LIGHTING ENGINEER
HARON ROBSON
CONTACT: TOM RUSSELL
181 FIRST AVENUE
FIVE DOCK NSW 2046
PHONE : 02 9819 6611
FAX : 02 9819 6665
EMAIL : trl@haronrobson.com.au

BCA CONSULTANT & FIRE SAFETY DESIGN
BCA LOGIC
CONTACT: ROSS PAYNE
LEVEL1
71-73 ARCHER STREET
CHATSWOOD NSW 2067
PHONE : 02 9411 5360
FAX : 02 9411 5420
EMAIL : rpayne@bcalogic.com.au

ARCHITECTS IN ASSOCIATION
ARCHITECT MARSHALL PTY LTD
CONTACT: SAM MARSHALL
NSW ARB NO. 4644
PO BOX 780
DARLINGHURST
NSW 1309
PHONE : 02 9310 7555
FAX : 02 9310 4144
EMAIL : sam@marshall.net.au

NSW DEPARTMENT OF COMMERCE GOVERNMENT ARCHITECTS OFFICE
PETER MOULD
NSW GOVERNMENT ARCHITECT
NSW ARB NO. 3301
CONTACT: WILLIAM PHELPS
LEVEL 16 McKELL BUILDING
2-24 RAWSON PLACE
SYDNEY NSW 2000
PHONE : 02 9372 8469
FAX : 02 9372 8487
EMAIL : william.phelps@services.nsw.gov.au

ARCHAEOLOGICAL CONSULTANT
CASEY AND LOWE
CONTACT: TONY LOWE
420 MARRICKVILLE ROAD
MARRICKVILLE NSW 2204
PHONE : 02 9568 5375
FAX : 02 9572 8409
EMAIL : tony.lowe@caseyandlowe.com.au

ACOUSTIC CONSULTANT
ACOUSTIC STUDIO
CONTACT: PETER GRIFFITHS
27/43-53 BRIDGE ROAD
STANMORE NSW 2048
PHONE : 02 9557 6421
FAX : 02 9557 6423
EMAIL : peter.griffiths@acoustic studio.com.au

ACCESS CONSULTANT
MORRIS GODING ACCESSIBILITY CONSULTING
CONTACT: DAVID GODING
PO BOX 469
PYRMONT NSW 2009
PHONE : 02 9692 9322
FAX : 02 9692 8433
EMAIL : david@mgac.com.au

PROJECT MANAGER
ROOT PROJECTS AUSTRALIA
CONTACT: KRISTIN WARK
LEVEL 5 KYLE HOUSE
27-31 MACQUARIE PLACE
SYDNEY NSW 2000
PHONE : 02 9251 8040
FAX : 02 9251 8144
EMAIL : kristin@rootprojects.com.au

CLIENT
MCA
CONTACT: EUAN UPSTON
140 GEORGE STREET
THE ROCKS SYDNEY NSW 2000
PHONE : 02 9245 2469
FAX : 02 9241 5854
EMAIL : euan.upston@mca.com.au

TRAFFIC CONSULTANT
CBHK
CONTACT: JOSH HOLLIS
SUITE 1801 ZENITH TOWER
821A PACIFIC HWY
CHATSWOOD NSW 2067
PHONE : 02 9411 2411
FAX : 02 9411 2422
EMAIL : joshua.hollis@cbhk.com.au

STRUCTURAL, CIVIL & FACADE ENGINEER
SDA
CONTACT: ANDREW SIMPSON
STUDIO 1
84 MULLENS STREET
BALMAIN NSW 2041
PHONE : 02 9810 6911
FAX : 02 9810 6922
EMAIL : andrew@simpsondesign.com.au

SIGNAGE & WAYFINDING CONSULTANT
DOT DASH
CONTACT: MARK TATARINOFF
STUDIO 9 LEVEL 3
35 BUCKINGHAM STREET
SURRY HILLS 2010
PHONE : 02 9698 3920
FAX : 02 9698 2611
EMAIL : mark@dotdash.com.au

SECURITY CONSULTANT
SCI
CONTACT: DANIEL PAUL
21 SYLVIA PLACE
FRENCHS FOREST
NSW 2086
PHONE : 02 94513619
FAX : 02 9451 3617
EMAIL : daniel@securityinternational.com.au

QUANTITY SURVEYOR
PAGE KIRKLAND GROUP
CONTACT: NIALL MCSWEENEY
THE PODIUM BUILDING
1 MARKET STREET
SYDNEY NSW 2000
PHONE : 02 9283 7311
FAX : 02 9283 7322
EMAIL : niall.mcsweeney@pagekirkland.com

PROJECTION / CINEMA SPECIALIST
DBLUX
CONTACT: ALAN BUTTERFIELD
37 WELLINGTON STREET
WATERLOO NSW 2017
PHONE : 02 9699 2639
FAX : 02 9699 2639
EMAIL : dblux@mac.com

PCA CONSULTANT
BLACKETT MAGUIRE + GOLDSMITH
CONTACT: TONY HEASLIP
SUITE 2.01
22-36 MOUNTAIN SREET
ULTIMO NSW 2007
PHONE : 02 9211 7777
FAX : 02 9211 7774
EMAIL : Tony@bmgdusg.com.au

MECHANICAL & ESD ENGINEER
STEENSEN VARMING
CONTACT: RICHARD CRAMPTON
150 SAILORS BAY ROAD
NORTHBRIDGE NSW 2063
PHONE : 02 9967 2200
FAX : 02 9967 2202
EMAIL : richard.crampton@steensenvarming.com.au

LIFT ENGINEER
JIM CAMPBELL & ASSOCIATES
CONTACT: PETER WARD
GROUND FLOOR
48 CHANDOS STREET
ST LEONARDS NSW 2065
PHONE : 02 9437 0577
FAX : 02 9437 0583
EMAIL : p.ward@jcallifts.com.au

LANDSCAPE ARCHITECT
GOVERNMENT ARCHITECTS OFFICE
CONTACT: BARBARA SCHAFFER
MCKELL BUILDING
2-24 RAWSON PLACE
SYDNEY NSW 2000
PHONE : 02 9372 8428
FAX : 02 9372 8366
EMAIL : barbara.schaffer@services.nsw.gov.au

LAND SURVEYOR
DENCON SURVEYING
CONTACT: STEVE DENNING
SUITE 1/10 EAST PARADE PO BOX 50
EASTWOOD NSW 2122
PHONE : 02 9874 3212
FAX : 02 9804 7901
EMAIL : dencon@ozemail.com.au

B1 | 0 10 20 30 40 50 60 70 80 90 100 | USE FIGURED DIMENSIONS IN PREFERENCE TO SCALING | CHECK ALL DIMENSIONS ON SITE | 200MM | 300MM ON ORIGINAL