Construction Management Plan

to Accompany Project Application for a

Proposed Subdivision Creating 72 Residential Lots, one Drainage Reserve and three New Roads

at Lot 9 DP 244002 and Lot 358 DP 755242

Cnr Morisset Park Rd and Chifley Rd Morisset Park

for Postfox Pty Ltd

July 2008

hale development services pty ltd

TABLE OF CONTENTS

Construction Management Plan

To accompany an Application
to the Department of Planning
for proposed Subdivision of
Lot 9 DP 244002 and Lot 358 DP 755242
Cnr Morisset Park Rd and Chifley Road,
Morisset Park

1 Introduction

The location of the subject land is shown in the diagram below:

Lot 9 has an area of 4.354 ha and Lot 358 has an area of 2.056 ha. The lots are shown on the diagram on the next page outlined in red.

Both lots are zoned 2(1) Residential under the Lake Macquarie Local Environmental Plan. The development to which this Construction Management Plan (CMP) applies is a proposed residential subdivision comprising 72 lots, one drainage reserve and three new roads. The proposed layout can be seen in the Erosion and Sediment Control Plan in Appendix 4.

The subdivision will create two new intersections, one off Morisset Park Road and one off Chifley Street. Work will include earthworks, road building, stormwater drainage, landscaping and the installation of water, sewer, electricity and telephone services.

Construction will be undertaken by an experienced civil contractor capable of the management of this site.

The contractor will be required to appoint an experienced professional Project Manager to control all aspects of the construction. This person will manage overall construction, safety, progress, quality, cost and environmental performance of all aspects of the project. In particular, the Project Manager will be responsible for overseeing adherence to the conditions of the development approval, the construction certificate and the requirements of this CMP.

2 Site Management Strategy

2.1 Communication

The name and phone number of the Project Manager will be available to Council should the need arise to make contact at any time. The name of the contractor and its contact details will be on display at the site in order that any person concerned with any aspect of the construction may contact the builder during business hours.

A Site Supervisor is to be present on site at all times that construction works are taking place. This person will be in ready communication with the Project Manager by mobile phone and shall be responsible for the overall supervision of day to day activities. The Site Supervisor will oversee daily construction activities, site safety, progress, quality, environmental performance, traffic management and subcontractor activity.

Regular project control meetings will be held with subcontractors and site supervisors to ensure all personnel are acquainted with the current issues with respect to site management including but not limited to safety; environmental management; and impact on adjoining properties, traffic and the public in general. Minutes will be kept of the project control meetings.

Toolbox meetings held by the Site Supervisors and sub-contractor representatives will ensure that individual employees receive regular information on the above matters and that consultation occurs that provides for bottom up communication of health and safety and environmental issues. Minutes will be kept which record the times, dates, names of attendees and discussion topics of toolbox meetings.

A copy of the conditions of consent of the Development Approval, the Construction Certificate and a copy of this Construction Management Plan will be kept on site for the use of the Project Manager and the Site Supervisor.

To assist in the management of the site, a Construction Management Plan Checklist is attached as Appendix 1.

2.2 Community Relationship Plan

Due to the gentle slope of the site large amounts of earthworks will not be required and large quantities of hard rock are not anticipated to be excavated. Hence, noise from machinery will not be excessive and by adhering to the permitted hours of construction, the impact of noise and vibration on nearby residents can be anticipated to be minimal.

The slope of the site towards the existing residences creates the potential for stormwater, especially silt laden stormwater while the site is exposed, to create a nuisance or damage to neighbouring properties.

A dilapidation survey, including photographs with date stamps, will be undertaken of the adjacent buildings, fences, properties and public infrastructure prior to commencement in order to help resolve any issues that may arise should damage be alleged to have occurred as a result of the construction activities.

Control of vibration and noise will occur in accordance with this CMP. The temporary traffic arrangements will be managed in accordance with the Construction Traffic Management Plan section of this CMP and AS 1742.3 – 2002.

Although it is unlikely to be necessary, the occupiers of the adjoining buildings will be advised in advance of any construction activity or altered traffic arrangement that may impact on them. This may be undertaken verbally by door knocking or by letter box drop giving three days notice.

A complaints register will be established to manage complaints and ensure that all concerns by persons affected by the proposed works will be given proper attention. Examples of the documents comprising the complaints register are given in Appendix 2.

2.3 Environmental Health and Safety

2.3.1 Contaminated Soil

There is no evidence from investigations of the site that would give reason to believe the soil is contaminated except for a small area where materials have been burnt and elevated levels of arsenic have been found in the vicinity of the eastern boundary of proposed Lot 47. This area will require further investigation by the geotechnical engineer prior to the commencement of work. Its treatment will be undertaken in accordance with the geotechnical engineer's instructions.

Earthworks will be necessary for the construction of the subdivision but there is no reason to believe that excavated soil will be contaminated. However, the excavation will be observed by the Site Supervisor and if there is any reason to suspect that the excavated soil is contaminated, it will be assumed to be so and

the Contaminated Soil Contingency Strategy described on page 10 of this CMP will be adopted for its management.

The site is mapped as Class 5 on the Acid Sulphate Soil Planning Map and acid sulphate soil (ASS) is unlikely to be found on the site. Although part of the site is within 500 m of soil mapped as Class 2 ASS, the site is considerably more elevated that the Class 2 soil and is therefore very unlikely to lower the water table with the Class 2 soil. If ASS is encountered on site it will be managed in accordance with the directions of the geotechnical engineer, treated, and used on site unless otherwise directed by Council or the EPA. If it is to be removed from site, it will be disposed of in accordance with the directions of the relevant authority.

2.4 Site Security

A site office, lunchroom, toilet and compound will be established near the entrance to the site and will be fenced with 1.8 m high temporary chainmesh fencing at all times until completion. The compound will be visited regularly by a night security patrol.

The site is not in a well lit position and it will be necessary to minimise the possibility of members of the public entering the land and being injured by falling into an open excavation. Regulation safety signage, warning persons of - *danger – construction site – no entry* – will be posted around the perimeter of the site. The existing high rural fencing will remain in place for as long as possible and when connection of the internal roads to the existing road system is undertaken, these connections will be closed during weekends and at night.

Any excavation that must be left open overnight or at weekends will be fenced with temporary safety fencing. With the above measures, it is considered that the likelihood of injury to members of the public who enter the site either unintentionally or deliberately is remote.

2.5 Construction Traffic Management Plan

Construction traffic will enter and exit the site at the proposed new intersection off Chifley Road. This site has been chosen as Chifley Road has a lower traffic speed than Morisset Park Road. A construction site compound in the vicinity of proposed Lots 27, 30 or 31 is closer to residential properties than a site on Morisset Park Road and will therefore be less likely to be broken into at night.

Daytime arrivals and departures will not significantly affect the amenity of the area.

All construction vehicles and plant will be parked on site and will not interfere with traffic flow during the construction of internal roads.

The construction of footpaths, kerb and gutter and installation of services for the lots fronting Morisset Park Road and Chifley Road will require the closure of the road shoulder for a period of approximately three weeks in each of these roads. This requires long term traffic control. Morisset Park Road is a high speed environment (>60 km/hr) and Chifley Road is a low speed environment (not greater than 60 km/hr). For the period that the road works are to be undertaken on these public roads, the speed environment will be reduced to 40 km/hr, advance warning signs will be positioned, and barrier rope with hanging reflectors will be erected along the edge of the road and all traffic controls shall be implemented in accordance with the requirements of AS 1742.3 2002.

The site is not a high pedestrian environment and signage will be erected to advise pedestrians that, during construction, the footpaths on the northern side of Morisset Park Road and the western side of Chifley Road, adjacent to the site, are closed to pedestrians. The signs will direct them to cross the road and walk on the opposite side.

The contractor will be required to submit a detailed traffic control plan to the Contract Superintendent prior to closing the road shoulder and this will be available to Lake Macquarie City Council upon request.

2.6 Occupational Health and Safety

The civil contractor will be required to have an Occupational Health and Safety Management Plan. This will provide, among other things, for risk assessments of all activities to be undertaken and reviewed progressively as the construction proceeds. Identified hazards will be eliminated (preferably), or minimised, by the preparation of Work Method Statements (WMSs). Hazards and safe work practices will be communicated to staff and sub-contractors through site inductions and toolbox talks. Consultation, incident reporting and ongoing hazard identification will be encouraged through these channels and other formal company communications. A typical incident report is attached as Appendix 3 but the contractor may have its own.

Subcontractors are responsible for preparing, implementing and reviewing their own WMSs but the Project Manager will ensure that they are in place.

3 Water Management Strategy

3.1 Erosion and Sediment Control

The site is gently sloping to the north and north-east and under normal rainfall it would not be readily eroded. Construction activities, such as the "boxing out" of roads and installation of drainage, typically exposes soil, redirects and concentrates flow, and increases the potential for erosion. A concept erosion and sediment control plan has been prepared as part of the Project Application and it will form the basis for detailed control of erosion and sediment as construction progresses.

It provides for the proposed detention basin to be constructed early in the project and used as a sediment basin. Flocculation will be used to accelerate settling to allow early discharge of retained water. Directing flows from disturbed areas to the sedimentation basin and keeping flows from undisturbed areas is also a feature of the concept. Cut off swales on the topside of soil stockpiles and sediment fencing on the low side of stockpiles will be used.

As the work progresses it will be necessary to employ other techniques, such as kerb inlet traps after the stormwater pits are constructed and sandbags at the lip of gutter prior to sealing of the road, to minimise mobilisation of soil and gravel. The concept erosion and sediment control plan is attached as Appendix 4.

3.2 Groundwater Management

Deep excavation of the site is not required and significant quantities of groundwater are not likely to be encountered. Should any groundwater be encountered, it will be discharged to the sediment basin to ensure only high quality water leaves the site.

3.3 Process Water Management

The need for significant quantities of process water on-site is not anticipated as hard rock excavation is not expected. However, if hard rock is encountered, water sprayed on hydraulic hammer chisels to cool them will be collected in the above described erosion and sediment controls.

4 Dust Management Strategy

Earthworks are expected to be in natural soils therefore a dust nuisance may be created by this activity in dry, windy weather. Any potential dust nuisance will be controlled as required by spraying the work area with sufficient water to lay the dust without creating runoff.

All trucks leaving the site with materials that could be mobilised by wind will be covered.

As areas are completed they will be stabilised to prevent windblown dust by the spreading of mulch or the laying of turf.

5 Road Management Strategy

A stabilised site access will be constructed from the exit leading from the site to Chifley Road. The road will be regularly monitored and swept or washed as required to prevent the build-up of fine layers of soil adjacent to the site.

6 Noise and Vibration Management Strategy

The building demolition and civil works demolition in this project is minor. No hard rock excavation is expected. Compaction of fill and road base is the most likely part of the construction to produce noise and vibration. This work is not immediately adjacent to existing residences. During this part of the process, vibration will be monitored. The effect of construction noise on residential amenity will be minimised by work activities being conducted within the times required by the development consent and by minimising the impact causing activities.

Only plant and vehicles that have been maintained in good working order with effective sound suppressing systems will be used on site. Equipment that is, or becomes, defective in this respect will be removed from site or stood down until repaired.

The site supervisor will manage the site to minimise noise in accordance with AS 2436 – 1981 and will consult with the occupiers of neighbouring development with respect to noise generation.

The proposed working times are within:

- Monday to Friday, 7.00 am to 6.00 pm.
- Saturday, 7.00 am to 1.00 pm if inaudible within residential buildings, otherwise, 8.00 am to 1.00 pm.
- Sundays and public holidays, no direct construction work or demolition work is to take place.

7 Contaminated Soil Contingency Strategy

7.1 Discovery of pre-existing contamination

A small area identified in the original geotechnical investigation may be contaminated with elevated levels of arsenic. This site will be the subject of further study prior to construction commencing. Apart from this area there is no reason to believe the site is contaminated, however as a contingency, if the Site Supervisor responsible for the earthworks and drainage stages of the development becomes aware of the discovery of any soil suspected of being contaminated with a material that has caused or may cause harm to human health or the environment, that Site Supervisor will immediately report the discovery to the Project Manager and isolate the area from further disturbance.

The Site Supervisor will ensure that the risk of harm being caused by the contamination is minimised by such methods as covering the soil (if it is likely to become windborne or to leach deeper by the percolation of rainwater) or by placing it in a bin, if this is a practical response. If the contaminating substance is giving off fumes or odours, or is in any way likely to cause ill health or irritation to employees or other persons on or near the site, every reasonable attempt will be made to prevent the escape of the fumes or odours and to establish a buffer area suitably wide to prevent the ill health or irritation.

No such material will be loaded for removal from site until an appropriate management plan is prepared.

The Project Manager will, as soon as practicable, arrange investigation of the soil that is suspected of being contaminated, by a person accredited under Part 4 of the *Contaminated Land Management Act 1997*. This investigation will determine:

- The nature and extent of the contamination of the land,
- The nature and extent of the harm that potentially could be caused by the contamination,
- The risk that the contamination will cause such harm,
- The most appropriate means of undertaking remediation of the land.

If remediation is to be achieved by the removal of the material from the site, the material will be characterised and the disposal location will be determined according to the character of the material and the class of the disposal site as required by the Environment Protection Authority of New South Wales (EPA).

If it is proposed by the builder to claim payment for the removal of contaminated material or for remediation of the site, the owner of the land shall be advised of its responsibility to notify the EPA of the existence of the contamination.

7.2 Chemical storage, disposal and spills

The Project Manager and the Site Supervisor are responsible for ensuring that all solvents, cleaners, paints, stains, fuels and chemicals are stored in accordance with the relevant material safety data sheets or other regulatory requirements.

Waste solvents, cleaners, paints, stains, fuels and chemicals shall be put in sealed containers and disposed of appropriately as hazardous wastes at suitable locations.

Every effort shall be made to avoid a spill of hazardous materials. If a minor spill occurs it will be cleaned up immediately in accordance with the Material Safety Data Sheet (MSDS) for that substance. If a spill occurs that harms or has the potential to harm the environment, the Site Supervisor must tell the Project Manager as soon as he/she is aware of it and the Project Manager must notify the EPA or LMCC immediately. If a large scale spill occurs, the Fire Brigade is to be called immediately on 000. Every effort shall be made to minimise the effects of a spill before the arrival of the Fire Brigade including:

- The blocking of all stormwater grates and inlets down slope from the spill, and
- The containment as much as possible of the material on impervious surfaces including concrete, clay or tarpaulins.

Emergency equipment to manage spills will be kept on site to assist in the management of spills including brooms, a supply of gloves, absorbent material (such as *Drisorb* or sawdust), a supply of bags and sand suitable for sand bagging kerb inlets and grates, and heavy duty plastic sheeting to line a low area to receive any flowing liquid as recommended by relevant MSDSs.
Instruction on these emergency procedures that are specific to the site shall be given to employees and contractors at site inductions and reminders will be included in toolbox talks on a regular basis.

MSDSs and a list of phone numbers shall be kept in a place that is accessible to staff. The phone numbers shall include:

Fire Brigade and Ambulance	000
Environment Protection Authority	131555
Lake Macquarie City Council (Business hours)	49210333
(After hours - emergencies only)	49210329

If contamination of the land is caused by the activities of the contractor, the contractor shall notify the EPA.

8 Concrete Handling Strategy

The Site Supervisor is responsible for overseeing all occupational health and safety matters and environmental protection issues relevant to the site. An area worthy of specific attention in this respect is concrete handling. The Site Supervisor must plan concrete deliveries in such a manner as to:

- avoid over ordering, thereby minimising waste, as far as practical,
- access the site in accordance with the traffic management plan, to avoid inconvenience or danger to the public,
- minimise queuing of delivery vehicles for ingress or egress,
- only allow concrete delivery trucks to washout in the washout area described below or otherwise direct them to return to the batching plant to dispose of left over concrete and to washout,
- provide wash down areas (see below) for tools and equipment that are contained in such manner that environmental harm will not arise from their use. In particular, there is to be no possibility that concrete or concrete slurry can enter the drainage system (including gutters),
- comply with the Workcover NSW Code of Practice – Pumping Concrete,
- minimise the risk of a concrete spill by ensuring that plywood (or similar material) is placed under the hopper of the concrete pump and cleaned up immediately and that formwork and falsework are designed in accordance with the Australian Standard AS 3610 - 1995. Spillage will be cleaned up by shovel and there will be no hosing-off other than in the wash down area.

Concrete will be sourced from reputable suppliers that have trained their drivers to complete a delivery without causing environmental damage.

The concrete pumping contractor will be responsible for providing a job specific WMS to ensure that all concrete pumping staff and/or subcontractors act in ways that do not cause environmental harm through spillage or leakage of concrete. The contractor will be required to consult with the Site Supervisor to ensure the wash-down arrangements are satisfactory and will not cause pollution of the stormwater, groundwater or soil of the site. Excess concrete shall be disposed of into a suitable receptacle and allowed to set prior to removal from site.

The concrete placing and finishing contractor will be responsible for providing a job specific WMS to ensure that all concrete placing and finishing staff and/or subcontractors act in ways that do not cause environmental harm through spillage or leakage of concrete. The contractor will be required to consult with the Site Supervisor to ensure the wash-down arrangements are satisfactory and will not cause pollution of the stormwater, groundwater or soil of the site. Excess

concrete shall be disposed of into a suitable receptacle and allowed to set prior to removal from site.

The Site Supervisor shall establish a concrete wash-down area in consultation with the concrete pumping contractor and the concrete placing and finishing contractor.

The wash down area shall be established as follows:

- On clay or hardstand – a hay bale dam will be constructed that is effectively sealed against leakage except through the hay bales.
- On sand or gravel – a hay bale dam with a geotextile lining of the base will be constructed that is effectively sealed against leakage except through the hay bales and the geotextile.
- The wash-down area will be clearly signposted to indicate its purpose and draw attention to its use.

The wash-down area shall be maintained or replaced as required during the course of construction to ensure its effectiveness.

The site is connected to the Hunter Water Corporation sewerage system so vigilance is required to ensure that there is no possibility of wash down water being discharged to the sewer. It must also not be discharged to the stormwater system. No exposed aggregate is proposed in the project.

During all concrete works, the erosion and sediment controls that are required to be in place at the time shall be inspected and maintained in good order.

9 Conclusion

This Construction Management Plan describes the strategies to be employed to minimise the impact on the environment, nearby land users, traffic and the public generally, as a result of the construction of a subdivision proposed at the corner of Morisset Park Road and Chifley Road. A copy of the CMP will be kept on site to facilitate the management of these impacts and to be referred to in the event of an incident requiring a response. Information to facilitate communication, and a checklist to reduce the possibility of omission of any required actions, are provided to minimise the risk of injury, impacts on residents' amenity, and impacts on the environment.

David Hale
Hale Development Services Pty Ltd
July 2008

Appendix 1 Construction Management Plan Checklist

Appendix 1

Construction Management Plan Checklist

Action	Responsible Person	Frequency					
		Once		Regular			
		At commencement of phase	As required	Daily	Weekly	Monthly	Other
Site Management							
Copy of this CMP held on-site	Project Mgr	X					
Copy of conditions of consent held on-site	Project Mgr	X					
Name and phone number of Project Manager provided to LMCC	Project Mgr	X					
Name and phone number of building company displayed on-site	Project Mgr	X					
Environmental responsibilities listed in PM's duty statement	Project Mgr	X					
This CMP approved by Council	Project Mgr	X					
Geotechnical investigation of suspected contaminated area undertaken prior to commencment	Project Mgr	X					
Community Relationships Plan implemented	Project Mgr	X				X	
Project control meetings held	Project Mgr						F'nightly
Toolbox meetings held	Site Sprvsr		X				
Provisions of Traffic Management Plan observed (some days may not be required) paricularly the items below	Site Sprvsr		X				
Traffic Controllers trained and appropriately attired	Site Sprvsr		X				
Required signs, barriers, etc maintained	Site Sprvsr	X	X				
Workers advised of parking requirements	Site Sprvsr	X	X				
Trucks/suppliers notified of queuing location	Site Sprvsr	X	X				
Risk assessments (safety and environmental) carried out	Site Sprvsr/ Project Mgr		X				
Work method statements prepared and communicated to staff	Site Sprvsr/ Subcontractor		X				
Site Log Book maintained	Site Sprvsr			X			
Site inductions conducted	Site Sprvsr		X				
Incident report forms completed	Site Sprvsr/ Project Mgr		X				

Construction Management Plan Checklist

Action	Responsible Person	Frequency					
		Once		Regular			
		At commencement of phase	As required	Daily	Weekly	Monthly	Other
Water Management *Erosion and sediment control*							
Silt fence erected and cut off swales in (before commencement)	Site Sprvsr	X					
Sediment basin constructed	Site Sprvsr	X					
Stockpiles properly located and protected	Site Sprvsr	X					
Stabilised site access in place	Subcontractor	X					
Roads swept	Site Sprvsr		X				
Erosion and sediment controls inspected	Site Sprvsr				X		daily in rain
Groundwater - if encountered							
Directed to sediment basin	Site Sprvsr	X					
Water quality checked before water pumped out	Site Sprvsr		X				
Dust Management							
Excavation material sprayed as required	Site Sprvsr		X				
Trucks covered when leaving site	Site Sprvsr		X				
Completed areas stabilised with mulch or turf	Site Sprvsr						
Noise and Vibration Mangement							
Work only within permitted times	Site Sprvsr			X			
Plant and vehicles monitored for excessive noise	Site Sprvsr			X			
Vibration monitored during compaction of fill and road base	Site Sprvsr		X				

Construction Management Plan Checklist

Action	Responsible Person	Frequency					
		Once		Regular			
		At commencement of phase	As required	Daily	Weekly	Monthly	Other
Environmental Hazards Management							
Chemicals stored in a lock up with impervious floor and bunded volume > 110% of largest container	Site Sprvsr		X				
Chemical waste disposal to LMCC requirements	Site Sprvsr		X				
Material Safety Data Sheets held on-site	Site Sprvsr	X					
EPA/PSC notified of spills	Site Superv/ Project Mgr		X				
Emergency equipment held on-site - see list	Site Sprvsr	X					
Instruction given on emergency spill proceedures given at toolbox talks and inductions	Site Sprvsr/ Subcontractor	X					2 monthly
Emergency phone numbers on display - see list	Project Mgr	X					
Concrete Handling							
Concrete pumping in accordance with WorkCover code of practice	Site Sprvsr	X					
Concrete supplier to have trained drivers	Project Mgr	X					
Concrete pumping contractor responsibilities and washdown addressed in subcontractor WMS	Site Sprvsr/ Subcontractor	X					
Concrete placing and finishing contractor responsibilities addressed in subcontractor WMS	Site Sprvsr/ Subcontractor	X					
Washdown area provided by one of the two alternatives. Appropriate washdown facilities to be available either on site, or off site	Site Sprvsr	X					

Appendix 2 Complaints Register Documents

Complaints Register

Compl-aint No	Date	Time	Name of person lodging complaint	Address of person lodging complaint	Subject of complaint	Date Resolved	Signed

Appendix 2

Details of Complaint

Complaint number : _____

Date : _____ Time : _____ am pm

Name of person lodging complaint : _____

Address of person lodging complaint : _____

_____

_____

Details of complaint :

_____

_____

_____

_____

_____

_____

_____

_____

_____

_____

Resolution of complaint :

_____

_____

_____

_____

_____

_____

_____

Date complainant advised of resolution : _____

Response of complainant :

_____

_____

_____

_____

Signed by Project Manager : _____ Date : _____

Appendix 3 Incident Report Form

Appendix 3

Details of Incident

Incident number : _____

Date : _____ Time : _____ am / pm

Name of Injured person : _____

Address of Injured person : _____

_____

_____

Telephone: (H) _____ (W) _____ (M) _____

Details of injury sustained and the cause of injury :

_____

_____

_____

_____

(Please tick) ☐ Employee ☐ Subcontractor
☐ Visitor ☐ Other

Medical treatment (none, first aid, ambulance, doctor etc):

_____

_____

Witness/s : Y / N

Name, telephone, signature :

1. _____
2. _____

Comments

_____

_____

_____

_____

Signed by Supervisor : _____ Date : _____

Appendix 4 Concept Erosion and Sediment Control Plan

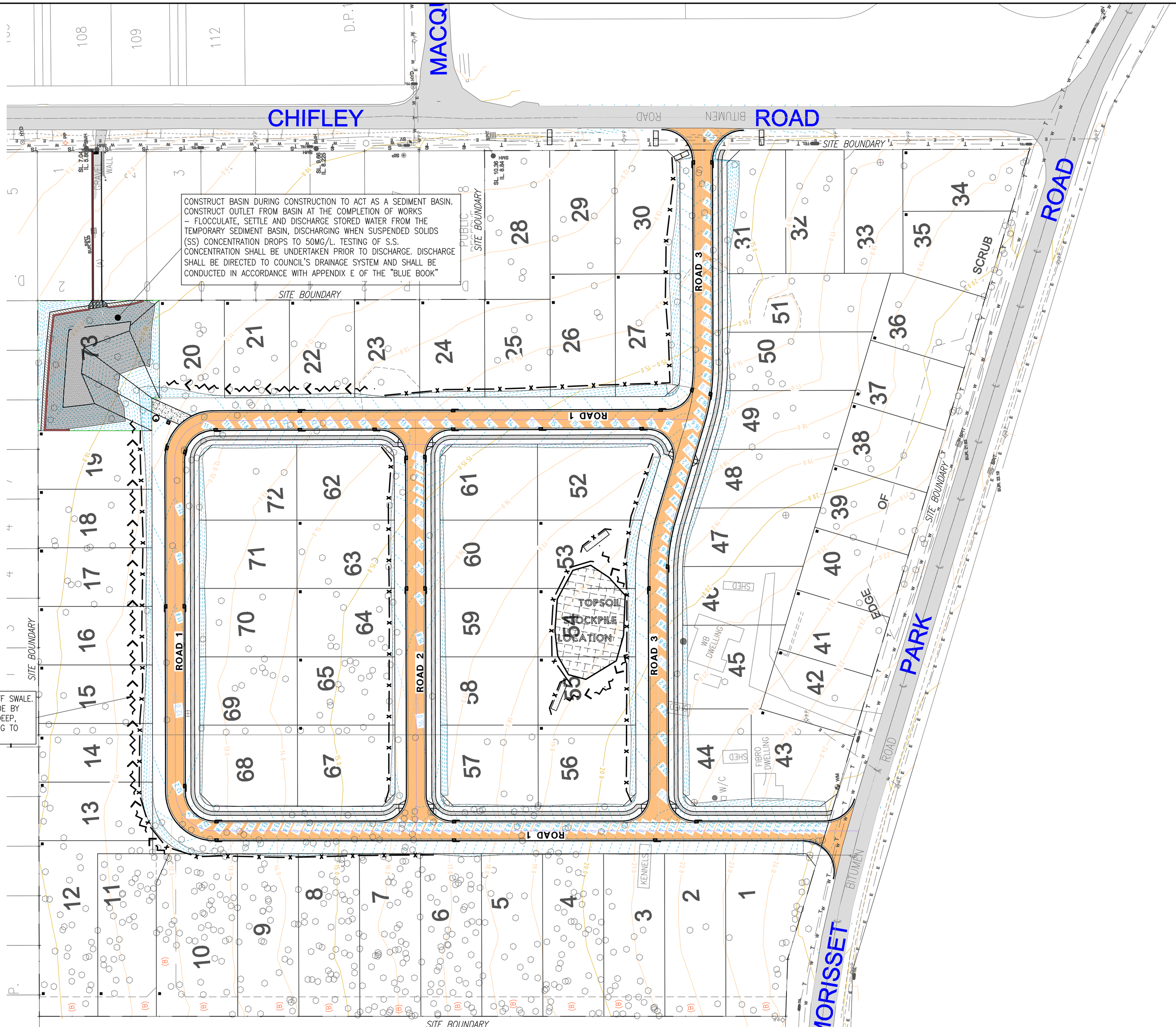

LEGEND

- DENOTES SEDIMENT CONTROL FENCE
- DENOTES STAKED BALES
- DENOTES PROPOSED STOCKPILE LOCATION
- DENOTES CUT OFF SWALE

NOTES

1. ALL WORKS ARE TO BE CARRIED OUT IN ACCORDANCE WITH THE CIVIL ENGINEERING DRAWINGS AND SPECIFICATIONS, LOCAL COUNCIL REQUIREMENTS, AUSTRALIAN STANDARDS AND THE LATEST VERSION OF NATSPEC SPECIFICATION. ALL CONFLICTS SHALL BE REFERRED TO THE SUPERINTENDENT.
2. ALL WORK IS TO BE CARRIED OUT IN ACCORDANCE WITH RELEVANT ORDINANCES AND REGULATIONS; NOTE IN PARTICULAR THE REQUIREMENTS OF LANDCOMS 'MANAGING URBAN STORMWATER, SOILS AND CONSTRUCTION' (THE 'BLUE BOOK').
3. THE SUPERINTENDENT SHALL ENSURE THAT COUNCIL'S STANDARD EROSION CONTROL SIGN AS DETAILED IN COUNCILS STANDARD DRAWING IS ERECTED IN A PROMINENT POSITION NEAR THE ENTRANCE TO THE DEVELOPMENT PRIOR TO THE COMMENCEMENT OF EARTHWORKS.
4. INSTALL SEDIMENT PROTECTION FILTERS ON ALL NEW AND EXISTING STORMWATER INLET PITS IN ACCORDANCE WITH EITHER THE 'MESH AND GRAVEL INLET FILTER DETAIL SD6–11' OR THE 'GEOTEXTILE INLET FILTER DETAIL SD6–12' OF THE 'BLUE BOOK'.
5. ESTABLISH ALL REQUIRED SILT FENCES AND STAKED HAY BALES AS DETAILED ON THE ADJACENT SITEPLAN & IN ACCORDANCE WITH DETAIL SD6–8 AND SD6–7 OF THE 'BLUE BOOK' RESPECTIVELY.
6. SUBCONTRACTOR IS TO INSTALL SILT FENCING AROUND INDIVIDUAL BUILDING ZONES/AREAS AS REQUIRED AND AS DIRECTED BY SUPERINTENDENT.
7. ALL TRENCH (INCLUDING STORMWATER INFILTRATION/ DISPERSION TRENCHES & ALL SERVICE TRENCHES) AND SWALE EXCAVATION SHALL BE SIDECAST TO THE HIGH SIDE AND CLOSED AT THE END OF EACH DAYS WORK.
8. ENSURE THAT ALL VEGETATION (TREE, SHRUB & GROUND COVER) WHICH IS TO BE RETAINED, SHALL BE PROTECTED DURING THE DURATION OF CONSTRUCTION
9. STRIP TOPSOIL IN AREAS DESIGNATED FOR STRIPPING AND STOCKPILE FOR RE–USE AS REQUIRED.
10. CONSTRUCT AND MAINTAIN ALL MATERIAL STOCKPILES IN ACCORDANCE WITH DETAIL SD4–1 OF THE 'BLUE BOOK' (INCLUDING CUT–OFF SWALES TO THE HIGH SIDE AND SILT FENCES TO THE LOW SIDE). REFER TO STOCKPILE LOCATIONS ON PLAN.
11. ENSURE STOCKPILES DO NOT EXCEED 2.5m HIGH. PROVIDE WIND AND RAIN EROSION PROTECTION AS REQUIRED IN ACCORDANCE WITH THE 'BLUE BOOK'.
12. PROVIDE WATER TRUCKS DURING CONSTRUCTION AS REQUIRED TO SUPRESS DUST.
13. ONCE CUT/FILL OPERATIONS HAVE BEEN FINALISED ALL DISTURBED AREAS THAT ARE NOT BEING WORKED ON SHALL BE RE–VEGETATED AS SOON AS IS PRACTICAL WITH ENDEMIC GROUND COVER SPECIES.
14. THE SITE SUPERINTENDENT SHALL BE RESPONSIBLE FOR KEEPING A DETAILED WRITTEN RECORD OF ALL EROSION & SEDIMENT CONTROLS ON SITE DURING THE CONSTRUCTION PERIOD. THIS RECORD SHALL BE UPDATED ON A DAILY BASIS & SHALL CONTAIN DETAILS ON THE CONDITION OF CONTROLS AND ANY/ ALL MAINTENANCE, CLEANING & BREACHES. THIS RECORD SHALL BE KEPT ON SITE AT ALL TIMES AND SHALL BE MADE AVAILABLE FOR INSPECTION BY THE PRINCIPAL CERTIFYING AUTHORITY DURING NORMAL WORKING HOURS.

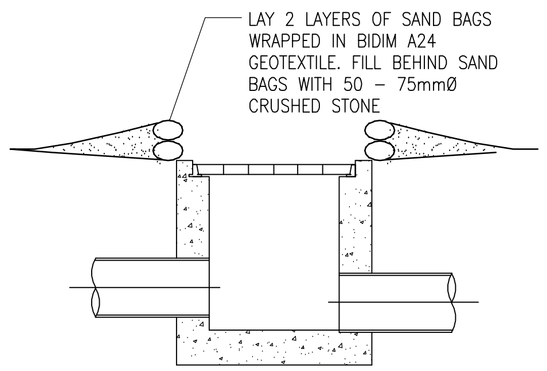

PIT PROTECTION DETAIL
(ALTERNATIVE DETAIL SD6–11 OR SD6–12 OF THE BLUE BOOK AS APPROPRIATE)

CONTRACTOR TO INSTALL SEDIMENT PIT RETENTION MEASURES TO ALL NEW & EXISTING S/W PITS, PRIOR TO COMMENCING CONSTRUCTION.

PRELIMINARY

DRAWN: S.STARTIN DESIGNED: B.CLARK JOB MANAGER: B.CLARK VERIFIER: B.CLARK

ISSUE	AMENDMENT	VERIFIED	APPROVED	DATE
1	PRELIMINARY			01.04.08
A	ISSUED FOR DA	AB	BC	30.04.08

CLIENT: MR CEDRIC WRIGHT

DRAWING NOT TO BE USED FOR CONSTRUCTION UNLESS VERIFICATION SIGNATURE HAS BEEN ADDED

SURVEYOR: de Witt Consulting
planning ■ surveying ■ project management
3 / 49 Pacific Street Charlestown NSW 2290 / PO Box 805 Charlestown NSW 2290
P 02 4942 8442 F 02 4942 8301 E admin@dwc-consulting.com.au
ABN 39 104 087 428

ALL DIMENSIONS TO BE VERIFIED ON SITE BEFORE MAKING ANY SHOP DRAWINGS OR COMMENCING ANY WORK.

PLANS 1:600 0 6 12 18 24 30m

NORTHROP
Bringing people, ideas & engineering together
Newcastle
388 Charlestown Road, Charlestown, NSW 2290
Ph (02) 4943 1777 Fax (02) 4943 1577
P.O. Box 180 Charlestown, NSW 2290
Email newcastle@northrop.com.au ABN 81 094 433 100

PROJECT: PROPOSED SUBDIVISION
LOT 9 D.P.244002 AND LOT 358 D.P.755242
MORISSET PARK ROAD
MORISSET PARK

DRAWING TITLE: CONCEPT SEDIMENT AND EROSION CONTROL PLAN

JOB NUMBER: NL070295
DRAWING NUMBER: C01 DA
ISSUE: A
DRAWING SHEET SIZE = A1