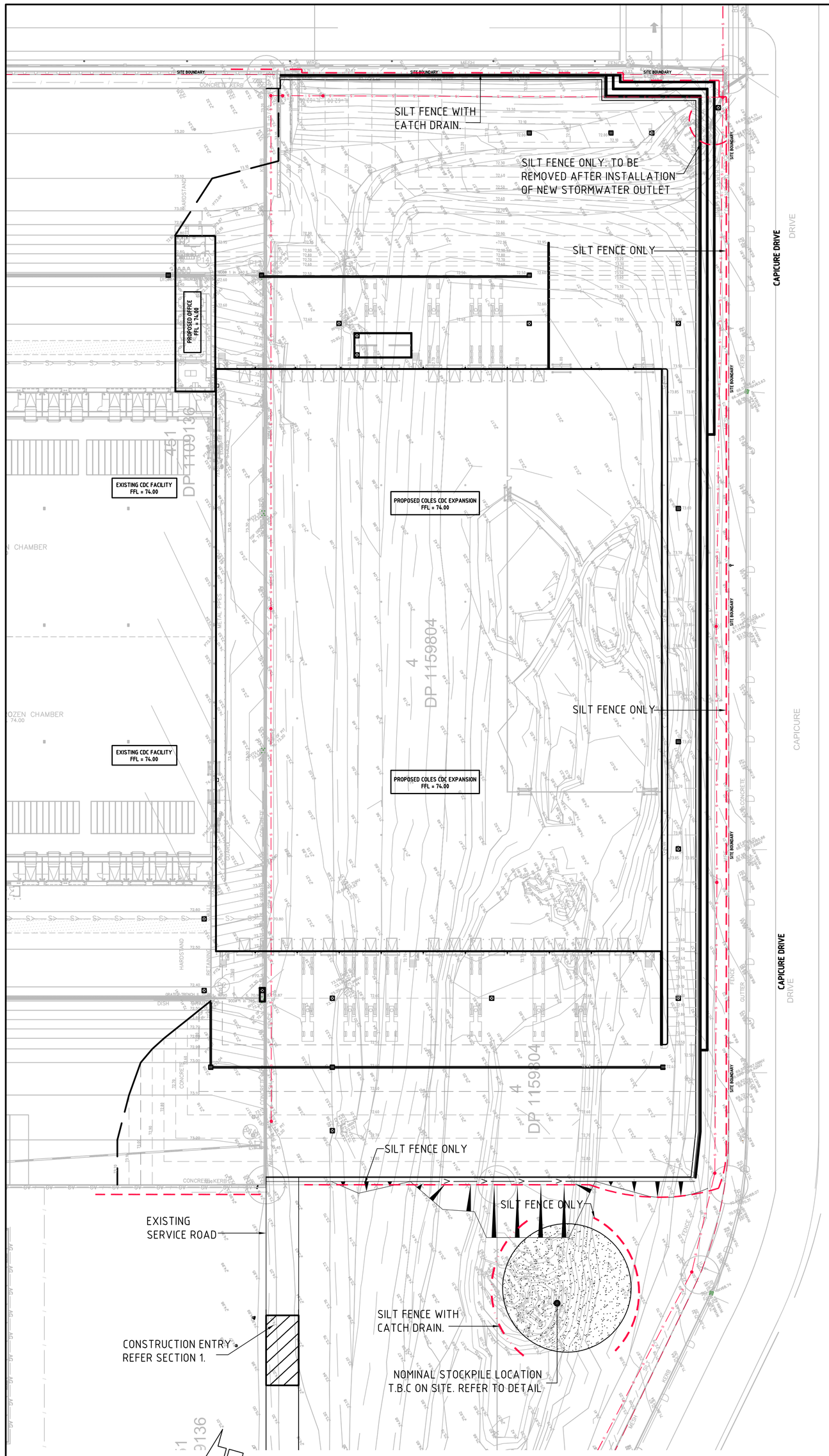

EROSION AND SEDIMENT CONTROL PLAN
SCALE 1:500

EROSION CONTROL NOTES

ALL CONTROL WORK INCLUDING DIVERSION BANKS AND CATCH DRAINS, V-DRAINS AND SILT FENCES SHALL BE COMPLETED DIRECTLY FOLLOWING THE COMPLETION OF THE EARTHWORKS.

1. SILT FENCES AND SILT FENCE RETURNS SHALL BE ERECTED CONVEX TO THE CONTOUR TO POND WATER.
2. HAY BALE BARRIERS AND GEOFABRIC FENCES ARE TO BE CONSTRUCTED TO TOE OF BATTER, PRIOR TO COMMENCEMENT OF EARTHWORKS, IMMEDIATELY AFTER CLEARING OF VEGETATION AND BEFORE REMOVAL OF TOP SOIL.
3. ALL TEMPORARY EARTH BERMS, DIVERSION AND SILT DAM EMBANKMENTS ARE TO BE MACHINE COMPACTED, SEEDED AND MULCHED FOR TEMPORARY VEGETATION COVER AS SOON AS THEY HAVE BEEN FORMED.
4. CLEAR WATER IS TO BE DIVERTED AWAY FROM DISTURBED GROUND AND INTO THE DRAINAGE SYSTEM.
5. THE CONTRACTOR IS RESPONSIBLE FOR MAINTAINING AND PROVIDING ON GOING ADJUSTMENT TO EROSION CONTROL MEASURES AS REQUIRED DURING CONSTRUCTION.
6. ALL SEDIMENT TRAPPING STRUCTURES AND DEVICES ARE TO BE INSPECTED AFTER STORMS FOR STRUCTURAL DAMAGE OR CLOGGING, TRAPPED MATERIAL IS TO BE REMOVED TO A SAFE, APPROVED LOCATION.
7. ALL FINAL EROSION PREVENTION MEASURES INCLUDING THE ESTABLISHMENT OF GRASSING ARE TO BE MAINTAINED UNTIL THE END OF THE DEFECTS LIABILITY PERIOD.
8. ALL EARTHWORKS AREAS SHALL BE ROLLED ON A REGULAR BASIS TO SEAL THE EARTHWORKS.
9. ALL FILL AREAS ARE TO BE LEFT WITH A BUND AT THE TOP OF THE SLOPE AT THE END OF EACH DAYS EARTHWORKS. THE HEIGHT OF THE BUND SHALL BE A MINIMUM OF 200MM.
10. ALL CUT AND FILL SLOPES ARE TO BE SEEDED AND MULCHED WITHIN 10 DAYS OF COMPLETION OF FORMATION.
11. AFTER REVEGETATION OF THE SITE IS COMPLETE AND THE SITE IS STABLE IN THE OPINION OF A SUITABLY QUALIFIED PERSON ALL TEMPORARY WORK SUCH AS SILT FENCE, DIVERSION DRAINS ETC SHALL BE REMOVED.
12. ALL TOPSOIL STOCKPILES ARE TO BE SUITABLY COVERED TO THE SATISFACTION OF THE CONTRACT ADMINISTRATOR TO PREVENT WIND AND WATER EROSION.
13. ANY AREA THAT IS NOT APPROVED BY THE CONTRACT ADMINISTRATOR FOR CLEARING OR DISTURBANCE BY THE CONTRACTOR'S ACTIVITIES SHALL BE CLEARLY MARKED AND SIGN POSTED, FENCED OFF OR OTHERWISE APPROPRIATELY PROTECTED AGAINST ANY SUCH DISTURBANCE.
14. ALL STOCKPILE SITES SHALL BE SITUATED IN AREAS APPROVED FOR SUCH USE BY THE CONTRACT ADMINISTRATOR. A 6m BUFFER ZONE SHALL EXIST BETWEEN STOCKPILE SITES AND ANY STREAM OR FLOW PATH. ALL STOCKPILES SHALL BE ADEQUATELY PROTECTED FROM EROSION AND CONTAMINATION OF THE SURROUNDING AREA BY USE OF THE MEASURES APPROVED IN THE EROSION AND SEDIMENTATION CONTROL PLAN.
15. ACCESS AND EXIT AREAS SHALL INCLUDE SHAKE-DOWN OR OTHER METHODS APPROVED BY THE CONTRACT ADMINISTRATOR FOR THE REMOVAL OF SOIL MATERIALS FORM MOTOR VEHICLES.
16. THE CONTRACTOR IS TO ENSURE RUNOFF FROM ALL AREAS WHERE THE NATURAL SURFACE IS DISTURBED BY CONSTRUCTION, INCLUDING ACCESS ROADS, DEPOT AND STOCKPILE SITES, SHALL BE FREE OF POLLUTANTS BEFORE IT IS EITHER DISPERSED TO STABLE AREAS OR DIRECTED TO NATURAL WATERCOURSES.
17. THE CONTRACTOR SHALL PROVIDE AND MAINTAIN SLOPES, CROWNS AND DRAINS ON ALL EXCAVATIONS AND EMBANKMENTS TO ENSURE SATISFACTORY DRAINAGE AT ALL TIMES WATER SHALL NOT BE ALLOWED TO POND ON THE WORKS UNLESS SUCH PONDING IS PART OF AN APPROVED ESCP / SWMP.
18. THE CONTRACTOR SHALL INCORPORATE THE MEASURES ON THIS PLAN WITHIN THE CONTRACTORS CONSTRUCTION MANAGEMENT PLAN.

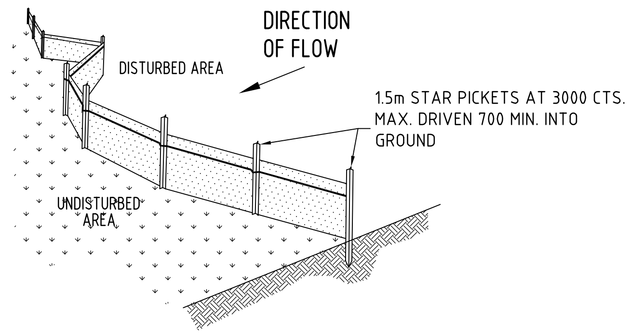

TYPICAL SILT FENCE DETAIL
N.T.S.
PROVIDE 1m RETURNS AT 30m INTERVALS.
TYPICAL

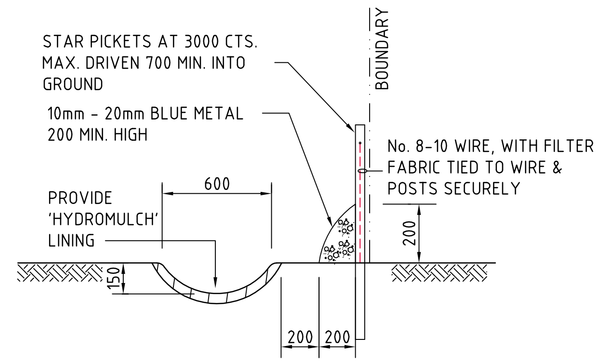

TYPICAL OPEN DRAIN & SILT FENCE
SCALE 1:20

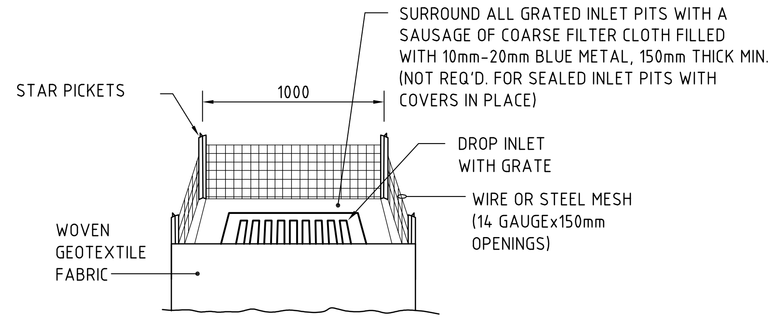

GRATED INLET PIT FILTER DETAIL
N.T.S

NOTE : ADOPT ABOVE DETAILS AROUND ALL PITS WITHIN AREA ENCOMPASSED BY SILT FENCE & TO PITS ON THE ROAD ADJACENT TO SITE BOUNDARY.

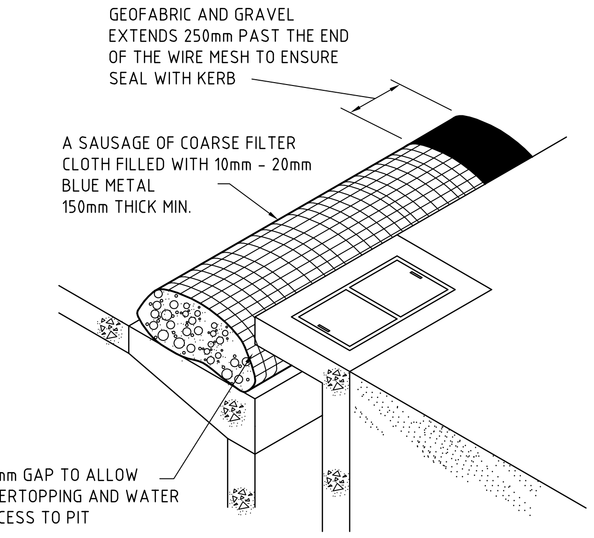

KERB INLET PIT CONTROL
N.T.S

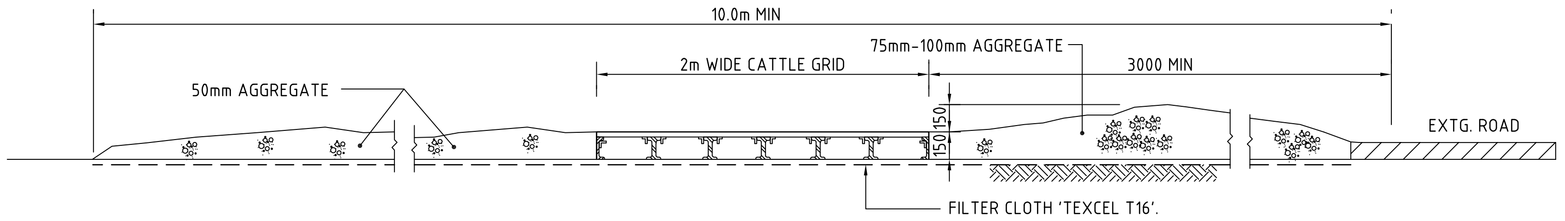

SECTION 1:20 (1 / -) : STABILISED CONSTRUCTION ENTRANCE 'TRUCK SHAKER'

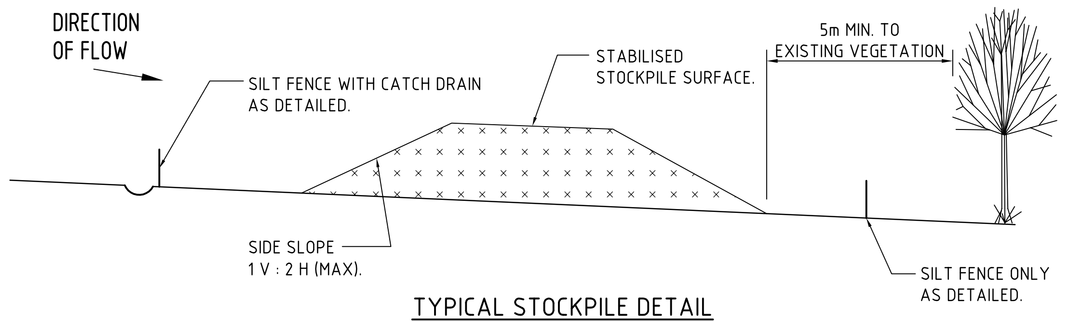

TYPICAL STOCKPILE DETAIL
N.T.S.

STOCKPILE NOTES

1. PLACE ALL STOCKPILES IN LOCATIONS MORE THAN 5m FROM EXISTING VEGETATION, ROADS & HAZARD AREAS.
2. CONSTRUCT ON THE CONTOUR AS LOW, FLAT ELONGATED MOUNDS. SIDE SLOPE TO BE 1 V: 2 H MAX.
3. WHERE THERE IS SUFFICIENT AREA, TOPSOIL STOCKPILES SHALL BE LESS THAN 2m IN HEIGHT.
4. WHERE STOCKPILES ARE TO BE IN PLACE FOR MORE THAN 10 DAYS, STABILISE USING WOOD CHIP MULCH - 16 TONNE/Ha.
5. CONSTRUCT SILT FENCE WITH CATCH DRAIN ON UPSLOPE SIDE TO DIVERT WATER AROUND STOCKPILES & SILT FENCE ONLY 1 TO 2m DOWNSLOPE AS SHOWN.

LEGEND:

PROVIDE 1m RETURNS TO SILT FENCE AT 30m MAX. INTERVALS.
TYPICAL (N.S.O.P.)

- SILT FENCE WITH CATCH DRAIN.
- SILT FENCE ONLY

200mm 0 500 1000 1500 2000mm
SCALE 1:20 AT B1 SIZE PLOT

5m 0 10 20 30 40 50m
SCALE 1:500 AT B1 SIZE PLOT

FOR DEVELOPMENT APPLICATION

AMENDMENTS	DATE	ISSUE
FOR DEVELOPMENT APPLICATION	08.02.13	B
PRELIMINARY - FOR INFORMATION	22.01.13	A

AMENDMENTS	DATE	ISSUE

ARCHITECT
SBA ARCHITECTS
Commercial Industrial Residential Retail Interior Design
Suite 702, 83 Mount Street, North Sydney NSW 2060
T 02 9929 9988 F 02 9929 8899
E info@sbaarch.com.au W www.sbaarch.com.au

CLIENT
Goodman
LEVEL 10, 60 Castlereagh Street SYDNEY NSW, 2000, Australia
Tel (02) 9230 7400 Fax (02) 9230 7444

PROJECT
PROPOSED COLES CDC EXPANSION
M7 BUSINESS HUB
WALLGROVE ROAD, MINCHINBURY, NSW

DESIGNED	DRAWN	DATE	CHECKED	SIZE	SCALE	CAD REF:
M.W	M.C	09.01.13		B1	AS SHOWN	Co8487.21 -DA20

CONSULT AUSTRALIA
Costin Roe Consulting Pty Ltd.
Consulting Engineers ACN 003 696 448
Level 1, 8 Windmill Street
Walsh Bay, Sydney NSW 2000
Tel: (02) 9251-7699 Fax: (02) 9241-3731
email: mail@costinroe.com.au ©
Costin Roe Consulting
Value in Engineering and Management

DRAWING TITLE
EROSION AND SEDIMENT CONTROL PLAN & DETAILS

DRAWING No Co8487.21 -DA20
ISSUE B