Gold Coast Office
S: Suite 26, 58 Riverwalk Avenue
Robina QLD 4226
M: PO Box 5102 Q Super Centre
Mermaid Waters QLD 4218
P: (07) 5562 5377
F: (07) 5562 5733
W: www.bitziosconsulting.com.au

Brisbane Office
S: Level 2, 428 Upper Edward Street
Spring Hill QLD 4000
M: Level 2, 428 Upper Edward Street
Spring Hill QLD 4000
P: (07) 3831 4442
F: (07) 3831 4455
E: admin@bitziosconsulting.com.au

Sydney Office
S: Studio 203, 3 Gladstone Street
Newtown NSW 2042
M: Studio 203, 3 Gladstone Street
Newtown NSW 2042
P: (02) 9557 6202
F: (02) 9557 6219

Your reference:

31 August 2022

School Infrastructure NSW
C/- Mace Australia
Level 17, 44 Market Street
Sydney, NSW 2000

Attention: **Keira Mears**

Sent via email: Keira.Mears@macegroup.com

Dear Keira,

RE: RESPONSE TO TRANSPORT COMMENTS ON MURWILLUMBAH EDUCATION CAMPUS

Bitzios Consulting prepared a Transport and Traffic Impact Assessment (TTIA) for the MEC that was submitted as part of a State Significant Development Application (SSD). Following review and exhibition stage a series of submissions were received from consent authorities, stakeholders and the public. This letter has been prepared to provide a response to traffic and transport related submissions made on the Murwillumbah Education Campus (MEC) including:

- NSW Department of Planning and Environment (DPE), including a separate DPE engaged traffic peer review
- Transport for NSW (TfNSW)
- Tweed Shire Council (Council)
- Public submissions.

Bitzios Consulting's response is provided in Table 1 and supporting attachments. In addition, these responses should be read in conjunction with Bitzios Consulting's *Murwillumbah Educational Campus Traffic Impact Assessment dated 19/04/2022.*

In responding to these submission items, meetings were held with DPE on Tuesday 26 July 2022 and Council on Friday 29 July 2022 to run through the items raised including clarifications, presentation of further work since the original SSD submission and approach to responding to issues.

It is also important to note the student population assumptions and in turn staff levels used for the transport analysis is based on the business case 'design capacity' of the proposal. It is understood based on student population forecasts prepared on behalf of DoE that even over the next 20 years the campus is not forecast to reach its full capacity. The transport assessment therefore represents a conservative approach to impacts related to traffic and parking impacts.

Table 2 provides a response to key themes and items raised in public submissions rather than responding to individual submissions.

Table 1: Response to Consent Authority Comments

Item	Response
Department of Planning and Environment	
(a) Bus Operational Plan for Murwillumbah *The Submissions Report must include a summary of outcomes from consultation between School Infrastructure NSW, TfNSW, local bus service providers and Council associated with the transport working group for the Bus Operational Plan for Murwillumbah. Key outcomes, constraints and risks relevant to the school catchment and delivery of the plan in time with the anticipated school opening year should be provided.*	Following the preparation of the transport and traffic impact assessment (TTIA) submitted as part of the SSD, Bitzios Consulting has been commissioned to investigate the bus network changes to accommodate the MEC. The Bus Operational Planning remains on-going at this time and outcomes will feed into route amendments for 2023 (temporary high school phase) as well as end state planning. As part of this project, Bitzios Consulting and representatives from SINSW are working with multiple sections within TfNSW's Bus Planning Team (Bus Network Planning and Contracts Teams) along with the various bus operators. A summary of consultation to date includes: ▪ Through the Transport Working Groups (TWG), TfNSW representatives acknowledged that the bus planning aspect for new and updated schools is typically undertaken following approval, with annual bus pass application and route planning occurring around October each year. Updates to existing contracts are done on an as-required basis in consultation with the operator ▪ TfNSW has advised that temporary high school bus changes will be dealt with via changes to existing contracts. The temporary high school bus route changes have been prepared and currently in review and consultation with operators ▪ TfNSW's bus contracts team have also recently advised of a proposed roll-out of real time bus tracking for school bus services and integration into TfNSW's "AnyTrip" Application, with Murwillumbah a key focus for TfNSW. ▪ Through the TWGs, Council provided input on the bus operations including the following items of concern: - Bus movements between schools through the Murwillumbah Town Centre during peak times are observed to impact network performance as well as intersection performance (for example Nullum Street / Wollumbin Street intersection) - The off-site bus interchange locations across the shire do not fall within a clear responsibility for either Council, Operators or TfNSW. This is not specifically related to the MEC bus should be a consideration for TfNSW in future bus planning reviews. With consideration to the above feedback, the bus planning review has developed a consolidated school bus network using Remix. This network has then been reviewed for both the end state (post opening of the MEC) as well as the temporary high school at Wollumbin High School. Preliminary investigations have determined that the proposed changes to the bus network can provide significant bus kilometre savings per day, with the majority of these bus kilometre savings occurring within Murwillumbah's town centre road network travelling between the existing schools. In addition, the MEC bus planning work has provided an opportunity and catalyst for TfNSW and operators to review the overall school bus system for Murwillumbah. This includes all schools, not only those directly related to the MEC. Preliminary outcomes of bus routes changes are currently undergoing review by TfNSW's bus network planning and contracts teams. Detailed outcomes regarding changes are not yet available and/or able to be documented in the SSD response given contractual processes with operators. Following this, further and more detailed refinement will occur including bus departure and arrival times at Nullum Street and coordination with bell times.

Item	Response
	It is important to note that these detailed operational aspects of the temporary school and bus operating system are still in development as part of operational planning. SINSW as well as TfNSW's contracts team are well aware of the lead times regarding these aspects and working in collaboration to ensure services are updated for the temporary high school as a matter of priority. In response to the potential constraints and risks associated with the bus planning phase of the project, the following is noted: ▪ The existing 49 bus routes (and their seating capacity) is considered at this stage to be sufficient to accommodate for initial demands for MEC campus 'opening'. This is due to the high level of interchange bus movements already utilising Nullum Street, which will be reduced as a result of the MEC. While the MEC catchment is large, the four existing schools are relatively closely located with the current focus on route planning of existing services. Increases in enrolments and bus pass applications are reviewed annually as part of annual bus review processes once enrolment and student pass numbers are known. For the temporary high school, the increase in bus patronage will relate to Murwillumbah High School (MHS) students currently living within proximity to MHS. The interchange nature of the Nullum Street and multiple services will provide numerous opportunities per peak period to accommodate boarding and alighting for high school students traveling to / from Wollumbin High School (WHS). ▪ Nullum Street currently functions as a key bus interchange location for school services not impacted by the temporary high school. Based on the temporary high school bus planning, it is expected that some level of interchange at Nullum Street will continue to occur. TfNSW and Bitzios Consulting in the process of consultation regarding the extent of changes required to support the temporary school bus planning as well as accommodate bus interchange needs (for other schools) along Nullum Street during construction. Fortunately, Nullum Street provides an extensive area of kerbside allocation to accommodate and maintain bus interchange on the northern and eastern extent of Nullum Street, well separated from construction activities associated with the MEC. ▪ Nullum Street / Wollumbin Street was raised as an existing intersection pinch point by Council, including the existing need for buses to use the intersection. As part of bus route planning, localised route updates have been considered including the diversion of routes away from Nullum Street / Wollumbin Street and to use the Brisbane Street / Wollumbin Street roundabout. In addition, the ability to remove bus circulation to three out of four schools as a result of the MEC significantly reduces bus movements through the town centre.
(b) Travel Mode Share Targets and Trip Numbers *It is understood that proposed mode share targets set out in the preliminary School Transport Plan (STP) were developed from catchment analysis surrounding the school site. The EIS states that existing school catchment student surveys were undertaken to understand current modal splits and to inform expected trip rates to the new school site.* *The Submissions Report must provide current transport mode splits, mode share targets and resulting vehicle trip rates that are*	Modal Assumptions for Traffic Assessment It appears there is some misinterpretation between mode share targets in the STP and demand numbers used for the traffic and parking assessment. A review of the existing travel mode shares for each of the four schools as well as the potential changes associated with the consolidation and relocation of students to the MEC site was undertaken and a key element of the TWG's. The TIA's traffic and parking assessment considered the items raised by DPE as noted below: ▪ Existing school travel was reviewed based on the travel mode surveys as noted in Section 3.8. While this was used as an input, existing mode shares was not the determining factor of mode share for the MEC campus for the STP or either the traffic or parking assessments ▪ STP mode shares were developed based on a catchment analysis of student and staff location in relation to the MEC campus to set realistic targets.

Item	Response
informed by the significant shift in existing student catchment populations relative to the location of the new school site. Together with analysis of student population within the walking and cycling catchment of the new school, achievable transport mode targets and realistic expected trip numbers should be provided. Clarification as to whether catchment service improvements anticipated from outcomes of the Bus Operational Plan for Murwillumbah have informed proposed mode share targets is also required. *Note: The Department has engaged a Transport consultant to undertake an assessment of the proposed mode share targets and traffic and parking generation resulting from mode share targets set out in the STP.*	▪ The STPs travel mode targets while still 'aspirational' were not used solely as the basis to set traffic trip generation rates or parking demand assessments.

Primary School			Notes
Travel Mode	Existing	Mode Share Targets*	
Staff			
Private Vehicle	99%	82%	
Walking	1%	8%	
Cycling	0%	5%	
Bus	0%	5%	
Student			
Private Vehicle	60%	35%	the proportion of students that do not live along an existing school bus route
Walking	4%	5%	the proportion of students that live within 15 min cycle of the school
Cycling	2%	10%	the proportion of students that live within 15 min of the school
Bus	34%	50%	the proportion of students that live within an existing school bus route
High School			
Travel Mode	Existing	Mode Share Targets	
Staff			
Private Vehicle	99%	82%	
Walking	1%	8%	
Cycling	0%	5%	
Bus	0%	5%	
Student			
Private Vehicle	30%	24%	the proportion of students that do not live along an existing school bus route
Walking	10%	7%	the proportion of students that live within 15 min of the school
Cycling	7%	10%	the proportion of students that live within 15 min of the school
Bus	53%	59%	the proportion of students that live within an existing school bus route
*: % of students based on catchment anaylsis			

▪ Traffic generation and parking demands were however developed based on capturing existing MHS school traffic volumes which assist in providing realistic volume of high school related trips to the subject site

▪ As per Section 7.1 of the TTIA, a peak hour trip rate was adopted as a conservative value based on access, parking supply and KnD demand/capacity, rather than target mode shares which while are desirable, may not be immediately achieved. Of note:

- 100% staff driving trips was assumed in the traffic analysis rather than an STP's 82% target
- The vehicle trips also considered high school students who may drive once obtaining their license.

Component	Quantity	Type	Driving Mode Share	Resultant Trips
Primary School Students Trips	461	KnD	45%	207
High School Student Trips	769	KnD	27%	208
High School Student Trips[a]	66	Self-Drive	100%	66
			Total students	481
			Total students w/ car share correction factor	297
School Staff Trips[b] (Within on-site parking provision)	129	staff	100%	129
School Staff Trips[a] (Off-site parking)	74	staff	100%	74
DoE Staff[c]	25	staff	100%	25
DoE company vehicles	7	staff	100%	7

a. *High School Student Trips and off-site/overflow staff trips assumed to use existing public parking*
b. *School Staff trips to the site is capped/limited by on-site parking supply, with remaining trips being off-site based on maximum 203 staff on any given day during the initial period until end of term-4 2025*
c. *Maximum DoE staff, unlikely all staff travel to the site every day with flexible working arrangements likely to continue. Trips have however been conservatively assessed as unused parking may be used for MEC staff.*

- A 45% mode share trip rate for primary school KnD was used based on averaging the existing and desired mode shares (60% existing, 35% desired target).
- A 27% high school drive mode share rate was based on averaging existing and mode share target rates (24% and 30% respectively)

Item	Response
	It is also important to note the travel mode shares discussed in detail in consultation with Council, all affected schools and TfNSW as part the TWGs. Consolidation of the various school catchments and subsequent changes to travel modes and targets also incorporated stakeholder input. This component of the TWG informed various aspects of the site masterplan and traffic analysis including: ▪ Gate entry orientation away from Riverview Street to preserve carrying capacity and discourage pedestrian activity along unsuitable roads ▪ The onsite Kiss 'n' Drop (KnD) facility scale, location, access capacity and queuing impacts on the neighbouring roads ▪ Bus stop planning to utilise existing facilities and manage bus access, queuing, and operations ▪ The limited need and ability to provide additional active transport linkages and crossings given the established catchments and markets for MHS and MPS. As further clarification, a 45% driving mode share applies to the primary school KnD. This does not reflect overall car trips (e.g. could be approximately 60% of modal travel based on existing schools) but is the expected peak demand to be accommodated off Nullum Street based on TWG feedback. Specifically regarding the design of the KnD, the trip demand component was one of several factors that informed the options analysis phase and ultimately the design of the KnD facility. During the TWG, Council officers provided input to the layout options, scale, and operations of the KnD facility. This also included input and acknowledgement that the KnD facility was not to be designed to encourage use or be relied on by parents as the primary or preferred travel mode choice (i.e. to balance traffic congestion and to encourage other modes). As such other parents' trips are expected to perform pick-up activities by car but may opt to 'Park and Walk' from the surrounding areas as is commonly experienced at schools across the Tweed Shire. While other trips and off-site parking may occur at varying levels (up to approximately 90 trips during the peak periods, noting based on traffic surveys and observations generally only 50% of staff trips occur during the PM peak), the established grid road network will facilitate various routes to / from the wider precinct. Given the number of vehicle trips spread across several routes (i.e. 10-20 trips per route) this traffic will not result in any adverse traffic impacts that would warrant the needs for additional infrastructure upgrades to be imposed. A sensitivity test has been prepared to incorporate a scenario as an example for these potential additional trips being added to key intersections and updated SIDRA results are provided in **Attachment B**. <u>Bus Mode Share</u> To clarify, the bus mode share was based on proportion of students that live within an existing school bus route catchment and as such bus mode share is not reliant on outcomes of the Bus Operational Plan. The traffic and parking analysis however did not assume this mode share shift would be immediate (i.e. vehicle trip generation is higher than mode share targets such as 45% KnD for the primary school as opposed to a 35% car mode share). Considering the established nature of Murwillumbah's school bus system (including but not limited to affected schools), bus planning remains and is important factor. The bus operational plan seeks to not only address the changes associated with the MEC but also to improve the school bus system as a whole for the region.

Item	Response
	SINSW is therefore working collaboratively with TfNSW Bus Planning team and operators to ensure bus travel mode share is maximised for the MEC and the bus system is improved as whole.
(c) Active Transport *STP mode share targets provide a notable uptake in cycling for staff and students compared to the existing low cycling rates and survey results which indicate high private vehicle usage for students and staff. The EIS makes reference to the STP, noting new cycling infrastructure in the locality, however there are no recent or future infrastructure upgrades detailed, and there is minimal analysis of existing cycling infrastructure provided to justify the cycle target increase.* *The Department has concerns that a number of the roads identified as being suitable cycling do not appear to be conducive to safe cycling, especially in relation to a number of roads that are located furthest from the proposed school.*	It is important to note that STP targets are aspirational, and while these targets are included in the STP they are not the basis for the analysis when it comes to actual travel, traffic or parking demand. To confirm no cycling infrastructure improvements are proposed beyond the immediate site frontages. The following immediate active transport infrastructure improvements are proposed as part of the project: ▪ New pedestrian crossing on High School Lane crossing to Nullum Street ▪ New pedestrian crossing on Nullum Street south of High School Lane ▪ A new pedestrian link along the south side of High School Lane, connecting Riverview Street to Nullum Street ▪ Provision of bicycle and other wheel devices (i.e. skateboard, scooter) parking facilities on-site which are more than demands forecast based on the travel mode survey. The travel modes share, and catchment analysis undertaken demonstrates that the available cycle catchment is constrained by both the large geographic catchment of the MEC, limited population concentration in the immediate vicinity of the school and topography constraints associated with historical road reserves across Murwillumbah. While some cycle routes could be investigated for further investment, it is important to note that the site is already occupied by an established high school that serves the immediate area of Murwillumbah. Council together with TfNSW are undertaking various studies to plan and prioritise walking and cycle infrastructure for the region, with this site remaining as part of an established community precinct. The wider local area surrounding the school includes residential areas along Byangum Road, out to Bray Park in the west and east of the Tweed River. These areas are currently serviced by local bus services, which will continue as part of the bus operational planning and are expected to be adapted to suit the change in patronage mix/dispersion. The findings of the TTIA noted given the large geographical catchment for the MEC and review of student catchment demonstrates greater reliance on maximising the bus utilisation to service students to minimise private vehicle usage rather than active transport being a key focus. As discussed at length with Council and TfNSW officers through MEC transport workshops, the limited cycle up-take and catchment coupled with the various constructability issues associated potential improvement locations limits opportunities for worthwhile active transport infrastructure. Notably Council's Roads representatives who are responsible for active transport have not questioned or requested additional active transport infrastructure. Rather the only active transport related request raised was by a separate part of Council in relation to street trees for shading of existing routes. As noted in the further response to this item it is considered there is no nexus between these works and the proposed development given the existing established school on-site and limited increase in demands. The project has also discussed the STP and active transport facilities with SINSW's Sustainable Transport Technical Advisor who has not raised any specific concerns with the STP, nor additional infrastructure improvements given wider topography constraints. Since the TTIA was prepared, independent road safety audits have been prepared for the area immediately surrounding the MEC campus to review existing conditions and the design.

Item	Response
	Of note, the limited items raised relate to existing maintenance issue for Council or items that are being addressed as part of the project design (i.e. pathway improvements in Nullum Street, improved pedestrian connection along High School Lane, reorientation of school site with focus away from Riverview Street frontage given constraints on that frontage). SINSW is committed to promoting and facilitating active school travel and is working with Council on various school sites across the Tweed Shire including for the MEC. SINSW will continue to engage with both Council and TfNSW beyond development approval phase of a project on funding sources and project identification to support safe school travel. The STP will remain a live document and will undergo monitoring and review. This includes a review of travel mode data, mode share targets and transport initiatives. While the travel mode share targets outlined in the STP are considered aspirational at this stage, they consider a range of area specific factors as well as state policies for regional NSW.
<u>Parking</u> *Part 8.4.2 of the Traffic Impact Assessment (TIA) states that surrounding public parking (off-site) capacity is generally available to accommodate for overflow parking demand. However, no off-site parking analysis has been provided to demonstrate existing parking availability on surrounding streets to accommodate overflow student, staff and visitor parking.* *At this stage and based on the current information, the Department does not support the proposal's car parking provision and associated heavy reliance of surrounding streets and potentially Council assets to accommodate car parking for visitors, students and staff. The Department does not support use of Council carparks without a license or agreement in place with Council. The Department recommends you consult further with Council on this issue and draws your attention to Section 5 (c) of Council's objection.* *The Submissions Report must include off-site parking analysis detailing the capacity of surrounding streets and parking facilities (if any) to accommodate overflow parking associated with the school's use, and that overflow parking would not significantly detract from existing on-street parking supply. The Submissions Report must also provide evidence of agreement by Council for use of its carparks to accommodate any overflow carparking.*	To supplement the parking assessment to date, a review of public and on-street parking occupancy has been undertaken for the surrounding streets and parking areas. A parking occupancy survey was conducted on Thursday 23 June 2022. This survey was within the school term 2 so a level of existing parking demand generated by the Murwillumbah High School's school population can be assumed to contribute to existing parking demand. The detail of the results is provided in **Attachment A** which contains a table of parking supply/demand to determine occupancy and illustrative maps to show street level parking availability. In summary: ▪ A total estimated 404 on-street car parking spaces were surveyed − During peak times available on-street parking supply will reduce to 382 spaces based on Nullum Street bus zone times (8:30-9:30am and 3:00-4:00pm) ▪ A maximum of 82 parking spaces were occupied (at 10:30am) leaving 322 spaces of available capacity. Based on the concentration of higher parking demands around Condong Street and Nullum Street (North of Condong Street) at this time this is likely due to an event being held at the nearby community centre. ▪ In the school peak times (8:30am and 2:30pm) there are only 66 parking spaces occupied in the surveyed area, meaning there is currently 316 on-street spaces available during school peaks Based on the parking demand assessment potential overflow parking that could be generated by the school could be in the order of 74 to 140 cars (the latter based on daily staff and year 12's self-driving by term-3, when the campus is at capacity) This would mean at least 176 on-street parking spaces (44% of available supply) would remain available at most times. This is conservative with respect to daily parking given the base demand already accommodate a level of parking generated by the existing MHS operations. During the afternoon school peak pick up time, with potential 'Park and Walk' pick-ups in the wider area, there could be demand for a further 93 vehicles to park short-term. This would reduce unoccupied public parking supply to 83 on-street spaces for a short period in the afternoon school peak. The results demonstrate that there is significant on-street parking capacity surrounding the MEC site and parking demands (even with the inclusion of the existing MHS) remain low throughout the school day. The expected demands associated with the MEC will therefore not result in adverse parking impacts outside the community's reasonable expectations. Regarding the potential use of council assets within the surrounding precinct to accommodate parking overflow associated with the MEC, this overflow parking can be accommodated on-street without any reliance of Council off-street car parking facilities.

<table>
<tr><th>Item</th><th>Response</th></tr>
<tr><td><u>Staff Numbers</u>

The total number of staff proposed is unclear. The Submissions Report must clarify proposed staff numbers in a table, providing a summary of proposed full time school staff, part time school staff and Department of Education office staff.

Further, the TIA states that there will be a period from school opening (in 2024) until the end of Term-4, 2025 when the MEC may have up to 203 staff on-site on any given day. There is no reference to this in the EIS and relevant parking and traffic analysis has not been provided to accommodate for 203 staff. If up 203 staff may be present on site until Term-4 2025, relevant parking and other staff-based considerations must be amended to include an operational scenario of 203 staff.</td>
<td>When the campus is operating at capacity, a total of 150 FTE positions will be required based on the total number of students. FTE however doesn’t translate to daily staff.

In addition to their FTE permanent staffing allocation, schools can fund additional staffing positions from their own school budget based on their specific needs. The number of school-funded positions is at the discretion of the principal and will change each year depending on the budget available and the needs of the school. As a result, all school-funded positions are temporary. As school-funded positions are additional to the core teaching positions, they are often part time. They can however be filled by full time temporary, part time temporary, or casual employees.

At the time of the original assessments as part of the TTIA the on-site daily staff reviews indicated a potential benchmark of approximately 12% loading on the FTE allocation for the campus. More recent figures (from August 2022) obtained by DoE however indicate the four schools currently have a daily loading factor which is higher at around 36%. This level of loading translates to the 203 staff, that was in the MEC 'Initial' Generation tables and subsequent initial parking demand outlined in the original TTIA

The current NSW DoE staffing allocation across all four schools adds up to a total of 148.9 FTE positions. This includes some positions the schools are eligible for under the department’s small school supplement scheme. The department has committed to maintaining all FTE positions through the transition to the campus and until the end of the 2025 school year.

From the start of 2026, the number of FTE positions the schools at the campus are eligible for will be determined based on the number of students enrolled in the merged primary school and merged high school. If enrolments were to stay the same as current levels across the existing schools, the campus would be eligible for a total staffing allocation of 128 FTE positions. The reduction from current levels would be due to the removal of duplicate positions, such as the reduction from 2 to 1 principal per school, and loss of the small school supplement positions that will no longer be required. If a 36% daily loading were to apply this would translate to approximately 175 daily school staff plus a maximum of 25 DoE office staff (199 total staff) in 2026.

Given their temporary nature, there is no commitment to maintain these positions after the transition to the campus. It is however reasonable to expect that the new schools will continue to employ additional staff over and above the FTE. This is at the discretion of the principals based on available budget and local needs. There are no projections available regarding how many school-funded positions there will be beyond 2022.

As a potential worst case for the purposes of a parking and traffic demand assessment if a 36% daily loading factor was applied to full site capacity’s 150 FTE school this would translate to up to 204 daily school staff plus the maximum of 25 DoE office staff (229 total staff).
<table>
<tr><th></th><th>2024 Opening</th><th>Start of 2026</th><th>At Full Capacity</th></tr>
<tr><td>FTE School Staff</td><td>148.9</td><td>128</td><td>150.1</td></tr>
<tr><td>Temporary Positions</td><td>54</td><td>~46</td><td>~54</td></tr>
<tr><td>Daily School Staff Sub-Total</td><td>203</td><td>174</td><td>204</td></tr>
<tr><td>DoE Office Staff</td><td colspan="3">25 maximum staff on-site</td></tr>
<tr><td>TOTAL</td><td>228</td><td>~199</td><td>~229</td></tr>
</table></td></tr>
</table>

Item	Response
	In terms of how these staff numbers are considered from a parking and traffic assessment perspective: ▪ The response to DPE item c is based off 203 staff ▪ A sensitivity traffic assessment for year of opening has been prepared to include off-site staff parking trips and is further discussed herein.
Based on the meeting held with DPE and their traffic peer reviewer on 26 July 2022 there were two key items requiring further response and assessment related to the Kiss and Drop facility, and traffic sensitivity analysis based on potential off-site 'Park and Walk' activities. The following responses are provided on these items.	
Further Item 1 from Peer Reviewer *Updated assessment on the suitability of the KnD area should be provided which:* • *Includes updated student mode share forecasts* • *Considers a 20 minute drop off and pick up period* • *Identifies any management measures required to support efficient student drop off and pick up*	Bitzios Consulting maintain the mode share forecasts and associated assumptions for the KnD facility are generally appropriate based on site behavioural patterns as well as feedback and outcomes of the TWGs. The KnD facility is included on the site to reduce parking impacts and improve parking turn-over efficiency during peak periods. The KnD facility is however not a requirement under Council's DCP nor is it designed to fully accommodate for all school student/parent travel demands. The KnD facility's location and design was refined through discussions with the TWG. Of note: ▪ The KnD facility was relocated away from the major traffic route of Riverview Street to reduce impacts to network operations. ▪ The KnD driveway access and vehicle storage does was not to rely on High School Lane ▪ The scale of the KnD facility was such that it does not significantly burden the site to compromise play or education spaces on the site ▪ The scale and operations of the KnD was appropriate to facilitate efficient pick-up /drop-off operations but designed at a scale to not promote 'over-reliance' of private vehicle mode share. ▪ That queuing areas on Nullum Street accommodate line marking and kerbside allocation to maintain through movements for bus access to the Nullum Street bus interchange facility. In response to the item raised, sensitivity tests were undertaken to consider the following factors: ▪ If the service rate was less efficient at 60 seconds ▪ Primary school KnD demand was increased to 50% ▪ Pick up period was compressed to 20 minutes Under any of the above scenarios, from a basic demand and queue perspective external queues would extend along Nullum Street. This outcome was acknowledged through TWGs in line with the above design considerations. The available on-street queueing area and associated delay for entering the KnD will acts as a travel demand management measure for use of the KnD over time. This is consistent with the existing operations of MHS's on-street KnD facility located on Riverview Street, which by virtue of its limited capacity and design promotes other pick-up options such and "Park and Walk" along other surrounding streets. The MEC site and surrounds also benefits from localised grid network which allows for alternate trip routes and streets which can safely and efficiently accommodate short-term on-street parking demands during school pick-up times. Further the school is able to implement, monitor and update its communication and STP measures to manage operations and peak demands. These elements will be developed further developed leading into operational phase of the School Travel Plan however the following is noted:

Item	Response
	▪ Unlike other locations where KnD facilities are on-street the MEC benefits from having the KnD area on-site. As such, as part of management of the facility vehicle access could be closed during the day and only opened just prior to pick-up time. This would limit any parents arriving early and 'parking out' the KnD drop-off/pick-up zone ▪ Split or staggered bell times could be implemented to reduce the peak arrive rate. Staggered bell times have been successfully implemented by other schools in the region and the option of staggered bell times is already being considered and investigated. ▪ As part of management and the school handbook, the KnD area could be prioritised to service Kindergarten to Year 3 pick ups only with older students pick up by 'Park and Walk' methods
Further Item 2 from Peer Reviewer *Following discussion at the meeting held on 26 July 2022, it was clarified that further traffic analysis be conducted to consider sensitivities associated with the KnD facility and off-site parking. Clarification on how bus movements were considered should also be provided.*	Bitzios Consulting maintain the target mode shares are appropriate but were not soley the basis of traffic generation rates for the TIA's analysis. As noted earlier the assumption on KnD traffic demands was based on averaging the existing and target mode shares. This previous analysis however may not reflect the full quantum of vehicle based pick up and drop offs with a portion of parents expected to 'Park and Walk' in initial years of the school operation. This 'Park and Walk' traffic was not included in the original analysis based on the likely spread of vehicle routes and destinations however a sensitivity test for PM peak traffic has been prepared to demonstrate the surrounding road network and intersections have sufficient capacity. In terms of sensitivity assumptions: ▪ If a 60% drive mode share was assumed for primary student trips this would generate a total of 277 trips being 70 trips above the previous analysis. ▪ If a 30% drive mode share was assumed for high school student trips this would generate 231 trips being 23 trips above the previous analysis. ▪ With regard to distributions: − 36% of the student catchment are from the west/south-west − 29% of the catchment are from the north-west − 24% of the catchment are from the east − 11% of the catchment are from the north ▪ Additionally, the previous intersection analysis did not include off-site staff parking trips. This would generate up to 74 additional trips in peak times It is noted however based on traffic surveys and observations generally only 50% of staff trips occur during the PM peak. As such this would generate 37 outbound peak times Based on the above this would generate a further 93 in trips and 130 out trips on the road network above the previous analysis. A sensitivity test has been prepared to incorporate the above scenario and updated SIDRA results are provided in **Attachment B** for the 2024 PM peak. The PM peak was selected as this is when schools have their greater traffic impacts based on more concentrated arrivals/departures compared with AM peaks when traffic activity tends to be more spread. Based on the results of this traffic sensitivity test it is not expected to result in any adverse traffic impacts that would warrant the needs for infrastructure upgrades to be imposed. As noted earlier, it is understood based on student population forecasts prepared on behalf of DoE that even over the next 20 years the campus is not forecast to reach its full capacity. As such levels of traffic generated by the school in a 10-year traffic design horizon are going to be similar to that in the 2024 analysis case. Within a 10 year horizon, STP initiatives to promote more sustainable travel will be more established so this would limit development traffic growth and apart from Riverview Street there would be limited background traffic growth

Item	Response
	experienced. It is also important to note the analysis is for school peak times rather than a traditional road network peak time. Bus movements were not explicitly added to the analysis however to note, all but two bus route trips already service MHS and therefore are incorporated into the background traffic and were not modified/removed for the development case. Based on bus operational planning work to date there is not expected to be any significant increase in bus movements during peak times.
Transport for New South Wales	
TfNSW considers that in our technical assessment of the Environmental Impact Study (EIS), specifically Traffic Impact Assessment (TIA), Construction Traffic Management Plan (CTMP) and School Transport Plan (STP) that the 'baseline' for impact assessment is reasonable and the predictions of impact are robust, however not yet complete.	It is noted that TfNSW considered the assessment to be reasonable and robust for this stage of the project. Based on previous discussions with TfNSW noting the further items below it is understood 'not yet complete' matters relate to the bus operations which while preliminary do not appear to present any major risks that could impact the previous assessments. The CTMP refinement will be further developed over stages and in consultation with Council. A STP at the SSD stage is preliminary but will be developed leading into operational phase of the project and in consultation with the school and TfNSW.
TfNSW has identified the need for additional work to identify changes required to school bus services during the construction and operational phases of the project. This work needs to consider the temporary relocation of students during construction and the relocation of new students to the site prior to occupation. This work needs to be carried out prior to the commencement of construction. It is noted that the Proponent has established a working group with TfNSW, Council and relevant bus service providers to enable this work to progress. It is recommended that the EIS clearly identify this process and any proposed mitigation measures…	Please refer to the response DPE Item a. for further detail. The Bus Operational Planning process is still on-going but has progressed well as detailed in response to DPE's Item a above. Bitzios Consulting is currently working with TfNSW's Bus Planning Team and operators for planning for temporary schools and arrangements for the MEC.
TfNSW has consulted with Tweed Shire Council and can confirm the following issues were discussed in finalising this advice. ▪ *All regulatory signs and devices proposed to be installed or modified by the Major Project will require endorsement by the Local Traffic Committee (LTC) prior to Council approval. For further details of this process please refer to A guide to the delegation to councils for the regulation of traffic.* ▪ *The existing School Zone signage will remain in effect during the construction phase whilst students have been relocated to Wollumbin High School. TfNSW recommends*	▪ Noted, this standard process is understood and requirement for works to go through the Local Traffic Committee is expected to be covered in consent conditions. ▪ Noted, and this aspect can be covered in consent conditions.

Item	Response
that the School Zone signage is covered during this period. This recommendation will require the endorsement of the LTC in consultation with TfNSW and NSW Police Force. ▪ *The Construction Traffic Management Plan (CTMP) identifies three (3) construction vehicle access gates. Gate 3 requires the implementation of a Traffic Guidance Scheme (TGS) reducing Riverview Street to a single carriageway, with contra-flow arrangements proposed to manage traffic during phases one and two of construction. The suitability of this arrangement should be further discussed with Council to confirm that it is supported and can be implemented prior to commencement of construction.* ▪ *A school of this size has the potential to impact on available car parking in surrounding streets, particularly during planned school events. Further consultation should be undertaken with Council to confirm appropriate options to address on-street parking during planned school events.*	▪ Noted, CTMP will be further developed over stages and in consultation with Council ▪ Noted, a review of on-street parking occupancy has been undertaken for the surrounding streets as detailed in response to DPE's Item c above. As noted, there is sufficient on-street car parking capacity to accommodate for overflow parking demands. As part of school operations and management consultation will occur between the school and Council to manage the occurrence on school events and to ensure they don't overlap with other events at the nearby sporting fields. This is not dissimilar to what already occurs in this precinct that contains an established high school and sporting fields.
Tweed Shire Council	
a. The traffic generation has been estimated on the anticipated enrolments and full-time staff. An average peak hour trip rate was adopted as a conservative value based on students travel mode surveys (assumed at current school attendance) and target mode share. Further clarification is to be provided on how the average peak hour trip rate was determined in relation to why the target mode share was considered appropriate and why FTE staff numbers were used when daily staff numbers may be more appropriate. Also, clarification is required on whether school bus movements were included in the traffic modelling. Any identified changes in traffic modelling should be used to review intersection performance and access to the Kiss and Drop off area.	To clarify, student travel modes for the traffic analysis to set trip rates was based on the catchment analysis of students in relation to the MEC campus and not based on existing travel modes. Further, the traffic analysis trip rates were not based on target mode share rather: ▪ 100% staff drive trips was assumed rather than an STP's 82% target ▪ The trip numbers also considered high school students who may drive once obtaining their license ▪ Demand on the KnD facility was set based on averaging existing vs target mode shares, and considering service capacity of the facility. To clarify, the TTIA analysis was prepared based off daily staff numbers (i.e. 168 staff rather than 150 FTE based on earlier daily loading assumptions). It is noted however as per site observations and traffic counts only half of the staff trips occur in the PM peak. Realistically a proportion of daily staff are part-time or work different days/hours so there is a further component of staff trips that may not occur during peaks. The analysis was however conservative to not apply this further adjustment as these 'daily' staff trips patterns could vary from day to day. Traffic associated with the development however especially for staff is capped by the provision of on-site parking which was the basis on the analysis. Similarly the on-site KnD facility will account a 45% of a potential 60% drive mode share for primary school. This assumption for the KnD was adopted to reflect the likely use and capacity of the facility, with other parents picking up through 'park and walk' from nearby locations.

Item	Response
	While other trips and off-site parking may occur at varying levels, the grid road network will facilitate various routes to / from the precinct. When reviewing the net increase in traffic volumes associated with the school and performance of the neighbouring intersections, the surrounding road network will have more than adequate capacity to accommodate additional traffic associated with higher staffing numbers. A sensitivity test has been prepared to incorporate a scenario as an example for these potential additional trips being added to key intersections and updated SIDRA results are provided in **Attachment B**. Bus movements were not explicitly added to the analysis however to note, all but two bus route trips already service MHS and therefore are incorporated into the background traffic and were not modified/removed for the development case.
b. The proponent has advised that any changes to the bus route planning associated with MEC will consider notable traffic pinch points across the Murwillumbah CBD in consultation with Council. It is noted that the recommendation from the proponent's Traffic consultants in relation to the development of a Bus Operation Plan did not include an assessment of intersection pinch points or include Council in the Plan's development.	This remains the case. Council did identify several pinch points within the CBD's network through the consultation process and these have informed the bus planning exercise. The bus planning is currently underway, and Council will continue to be consulted throughout this process. Regarding outcomes to date, the refinements to bus routes associated with the MEC show a reduction in bus circulation needs around the CBD as well as opportunities to re-route away from known peak period congestion points. Detailed outcomes regarding changes are not yet able to be shared due to contractual processes with operators. Further details regarding the bus operational planning are detailed in response to DPE's Item a above.
*c. The proposed parking provision is considered inadequate. There are only 161 spaces proposed on site. There is an estimated 168 staff (teaching/support) to be on site on any given day. In addition, a DoE regional office is proposed with 25 staff and storage required for 7 fleet vehicles. Using the provided data that 99% of Staff drive to work, the minimum car parking required is (168 + 25) *.99 + 7) = 199 spaces just to cater for staff. While there is potential on street parking availability on Nullum Street of 48 spaces, these will be consumed by staff. Therefore, parents who wish to visit the school or students who are expected to drive (90 estimated) will park some distance away in front of residential properties and will result in parking compliance issues and resident amenity complaints to Council.*	It is important to note that the FTE numbers on which the calculations are based are for ultimate approval 'design capacity', however forecast projections for student population do not actually reach full capacity meaning the full quantum of FTE allocation is not expected to be realised. To supplement the parking assessment to date, a review of public and on-street parking occupancy has been undertaken for the surrounding streets and parking areas. The detail of the results is provided in **Attachment A.** In summary: ▪ A total estimated 404 on-street car parking spaces were surveyed within the surrounding catchment. − During peak times, available on-street parking supply will reduce to 382 spaces based on Nullum Street bus zone times (8:30-9:30am and 3:00-4:00pm) ▪ A maximum of 74 parking spaces were occupied (which occurred at 10:30am) leaving a total of 322 spaces of available capacity within the surrounding streets. Based on the concentration of higher parking demands around Condong Street and Nullum Street (North of Condong Street) at this time, the demands in that particular area were attributed to the nearby community centre. During this time, on-street parking was rare and freely accessible across all other streets ▪ During the school peak times (8:30am and 2:30pm) there are only 66 parking spaces occupied in the surveyed area, meaning there is currently 316 on-street spaces available. ▪ Between 3:00-3:30pm, when school peak pick up occurs there are only 66 to 61 spaces occupied leaving at least 316 spaces available. The results demonstrate that there is significant on-street parking capacity surrounding the MEC site. Parking demands (even with the inclusion of the existing MHS) remain low throughout the school day. As agreed with Council officers at the meeting held on the 29th July, the parking survey results are

Item	Response
	representative of the existing operations around the MHS, inclusive of existing MHS demands. Further to this, the parking surveys confirm that there is currently no adverse parking issues (to safety, traffic efficiency or amenity) surrounding the MEC site. Therefore, the expected additional parking demands associated with the MEC can be adequately accommodated within the precinct and will not result in exacerbation of any safety, efficiency, or amenity impacts. The proposal seeks to maximise parking on-site for staff, while also considering the existing established MHS operations, its relationship with its surrounds, operational parking needs for the school, as well as accommodating and promoting other travel modes over time. The ability to accommodate additional parking on-site is limited without compromising safety or other facilities within the school such as reducing available play space. Further to this, the installation of a KnD facility on-site is directly aimed at reducing parking demands associated with conventional parking layouts. While some overflow parking may occur to surrounding streets, this peak period operation is not unexpected for schools or community facilities as represented by Council's DCP rates. In addition, the site incorporates the established high school (MHS) and some level of parking activity within the surrounding area is well within the community's reasonable expectations.
<u>Natural shade along active transport routes.</u> *b. Shading of active transport (pedestrian and cycle) routes does not appear to have been considered. Although, active transport is promoted within the Transport Impact Assessment, natural shade and canopy cover is only considered within the school boundary (albeit reduced). It is recommended that street tree planting is included as part of the development to provide natural shade along these high use areas. Given that the school would be the primary user of the paths in this area, it is considered appropriate that landscaping (shade trees) along these routes are required to form part of the development. The extent of shade tree planting is recommended to be at a minimum, along High School Lane and along Nullum Street to the Hartigan Street intersection and Riverview Street where possible…*	It is worth noting that the subject site comprises of the Murwillumbah High School (MHS), with existing and well established active transport routes and crossing facilities. The project team has looked at options for 'shade' street trees along the site frontage however: ▪ High School Lane is restricted by verge widths and the need to provide a footpath along this frontage ▪ Much MEC's street frontage on Nullum Street is bus stop and bus layover for which trees are likely to conflict with or at risk of being damaged by bus movements close to the kerb.
<u>Car parking shortfall and impact on adjacent Council managed facilities.</u> *…Council is concerned that the overflow car parking demand (60-90 cars per day) generated from the school development will unacceptably impact nearby public facilities. Council as facility-owner does not support the resultant burden this will have on the public facilities in the area, particularly without the development financially contributing…*	As noted in the earlier response to parking items there is sufficient on-street car parking capacity to accommodate for any overflow parking demands. As such, the school would not be reliant on use of parking associated with the adjacent Council sports facilities. School Travel Plan measures and associated communication collateral can be specific to discourage use of this parking area such that there is no burden on this public facility. Regarding the potential use of council assets, this type of shared parking operation is also consistent with the existing operations as well as various other sports precincts across the Tweed Shire adjacent to schools.

A number of public submissions related to traffic and parking had been received. Rather than responding to individual submissions which overlap, responses are consolidated to respond to the follow key topics and themes:

- Traffic congestion with consolidated school campus
- Mode shares and active transport (walk/cycle) access and facilities
- Construction traffic
- Kiss and Drop facility traffic and operation
- Parking demand and overflow

Table 2 provides further responses to specific items raised.

Table 2: Response to Public Submission Themes

Item	Response
Traffic with consolidated school campus	It is important to note, while the MEC campus will focus traffic into specific locations it does not result in significant increase in overall school traffic in the central Murwillumbah area. Through consolidation there is the opportunity for reduce trips and wider congestion including: ▪ With the closure of other school campuses this will reduce school peak congestion on other parts of the road network with roads that have greater road and intersection capacity constraints ▪ A consolidated campus will reduce circulate trips currently occurring from: – Parents who may have children of both a primary school and high school age having to travel between campuses – Bus routes currently connecting the four public school. Central bus network kilometres will be reduced from bus service providers routes no longer having to circulate between several campuses including return trips to sites such as the Nullum Street bus interchange. The subject site is the location of the established MHS and existing site analysis demonstrates that the surrounding road network (including Riverview Street and Nullum Street) have capacity to accommodate the MEC. The MEC's transport components underwent design development and refinement in consultation road and transport authorities including Tweed Shire Council and Transport for NSW. The MEC design incorporates the necessary transport infrastructure to accommodate the proposal. In addition, as part of the school operations once the MEC campus is established, school travel management procedures will be in place, monitored and updated over time.
Travel mode shares, and walk/cycle considerations	To clarify, and as per Section 7.1 of the Traffic Impact Assessment (TIA) Report, the mode shares adopted for the traffic and parking assessment for the MEC campus, along with the draft School Travel Plan have been developed based on a catchment analysis of students located within relevant active transport and public transport service catchments to the MEC campus. The adopted mode shares are not based existing school mode share and catchments at the existing schools noted in Section 3.8 of the TIA Report.

Item	Response
	Only 10% of students live in a walk-up catchment and 25% live in a potential cycle catchment of the MEC campus. The use of these travel modes were also informed by staff and student surveys of all schools associated with the MEC for both existing and future MEC travel patterns. The street topography surrounding the school to key markets was also a determining factor for the potential walk and cycle catchments. Additionally, availability of local bus services for 'outer suburban' Murwillumbah means bus travel is a more attractive option for the MEC. This is relevant for students currently enrolled at schools such as WHS and MEPS. Active transport uptake is therefore focused on capturing those students living in proximity to the MEC, which have existing pathway facilities that service the existing MHS and MPS school areas. Existing facilities were reviewed, and independent road safety audits have since been prepared for the area immediately surrounding the MEC campus. Of note, the limited items raised relate to existing maintenance issue for Council or items that are being addressed as part of the project design (i.e. pathway improvements in Nullum Street). As per Table 4.1 of the TIA report the following active transport improvements will be delivered as part of the project: ▪ New pedestrian crossing on High School Lane crossing to Nullum Street ▪ New pedestrian crossing on Nullum Street south of High School Lane ▪ A new pedestrian link along the south side of High School Lane, connecting Riverview Street to Nullum Street ▪ Provision of bicycle and other wheel devices (i.e. skateboard, scooter) parking facilities on-site which are more than demands forecast based on the travel mode survey.
Construction Traffic	The surrounding road network will have sufficient capacity to accommodate the low levels of additional construction traffic coupled with the temporary closure of school activities at the subject site. Buses and other heavy vehicles currently operate on all streets proposed to be used by construction vehicles. Two parking areas for construction worker vehicles are provided on-site and there are 404 on-street car parking spaces in the surrounding precinct Based on recent parking surveys a maximum of 74 parking spaces were occupied (at 10:30am) leaving 322 spaces of available capacity in parking in the surrounding area.

Item	Response
	 SOURCE: Nearmap **Figure 2.1: Nearby On-street Car Parking Restrictions**
Kiss and Drop Facility	The proposed Kiss and Drop (KnD) facility will serve as safer and more efficient pick up and drop off facility for the Murwillumbah Education Campus (MEC) that does not currently exist at the Murwillumbah High School. The KnD facility will facilitate the majority of primary school pick-up by car along with a proportion of high school pick-ups. However, the KnD facility was not designed as a "capture all" solution given the need to manage traffic congestion and encourage other transport modes. The demand of the KnD also consider the existing behavioural aspect for the MHS and high proportion of off-site "park and walk" that utilise the surrounding precinct and is expected to remain. The KnD location and design was refined through discussions with the TWG. Of note: ▪ The KnD facility was relocated away from the major traffic route of Riverview Street to reduce impacts to network operations. ▪ The KnD driveway access and vehicle storage does was not to rely on High School Lane ▪ The scale of the KnD facility was such that it does not significantly burden the site to compromise play or education spaces on the site ▪ The scale and operations of the KnD was appropriate to facilitate efficient pick-up /drop-off operations but designed at a scale to promote 'over-reliance' of private vehicle mode share. ▪ That queuing areas on Nullum Street accommodate line marking and kerbside allocation to maintain through movements for bus access to the Nullum Street bus interchange facility.
Parking demand, including overflow parking and parking at event times	A total of 161 staff parking spaces are provided on-site. This provision is practical maximum on-site parking supply based on available space, while balancing the need for other school facilities (such as available play space) and adequate separation of student areas from on-site vehicle traffic. In addition to on-site parking there are a total estimated 404 on-street car parking spaces within a walkable distance of the MEC. During peak times school times available on-street parking supply will reduce to 382 spaces based on Nullum Street bus zone times (8:30-9:30am and 3:00-4:00pm) A maximum of 74 parking spaces were occupied (at 10:30am) leaving 322 spaces of available capacity. In the school peak times (8:30am and 2:30pm) there are only 66 parking spaces occupied in the

Item	Response
	surveyed area, meaning there is currently 316 on-street spaces available during school peaks in the wider precinct. The results demonstrate that there is significant on-street parking capacity surrounding the MEC site and parking demands (even with the inclusion of the existing MHS) remain low throughout the school day. Regarding school event times this above referred parking supply will be available and the school would seek to take a coordinated approach with Council to manage event times to limit potential for events at the school overlapping with any major sporting activities at the nearby sporting fields. This factor is no different to the existing and established operation of the existing MHS.

Yours faithfully

Jason Brook

Principal Transport Planner

BITZIOS CONSULTING

Attachments:

A: On-street and Public Parking Survey Map and Results

B: Sensitivity Test Traffic Analysis

Attachment A

On-Street and Public Parking Survey Map and Results

32 sections
½ hour beats
Number of cars parked per street section
Knox Park
Coles
Murwillumbah Respiratory Clinic
Repco Murwillumbah
Auto parts store
Sathya Sai College - Primary Campus
Murwillumbah Sikh Temple
Murwillumbah Tile and Mattress Steam...
Murwillumbah Public School
Chinese Medicine
Murwillumbah Skate Park
Budget Driver Training
Murwillumbah Bus Co PTY Ltd
Parsons Bus & Coach
Murwillumbah Early Education Centre
Ricers Residenti Services
Murwillumbah Creek
Hartigan St
Gary W Fidler Architect
Lucas Lookout
Lucas Park
Murwillumbah Rural Fire Brigade
Murwillumbah Exhaust & Service Centre
Hockey Tweed
Tech in Town
Temporarily closed
Murwillumbah High School
Fit As a Fiddle
Short St
Prince St
Prince Ln
Factory Ln
Byangum Rd
Florin Ln
Condong St
Spring St
Spring Ln
Myrtle St
Myrtle Ln
Eyles Ln
Eyles Ave
Riverview St
Nullum St
Brisbane St
Peri St
James St
James Ln
Fulford Ln
32
1
2
3
4
5
6
7
8
9
10
11
12
13
14
15
16
18
19
20
21
22
23
24
25
26
27
28
29
30
31

Location ID	7:00am	7:30am	8:00am	8:30am	9:00am	9:30am	10:00am	10:30am	11:00am	11:30am	12:00noon	12:30PM	1:00pm	1:30pm	2:00pm	2:30pm	3:00pm	3:30pm	4:00pm	4:30pm	Notes
1	0%	0%	0%	47%	35%	29%	29%	41%	35%	35%	29%	24%	24%	24%	24%	29%	35%	12%	6%	6%	
2	30%	20%	20%	20%	30%	30%	30%	30%	10%	10%	20%	30%	30%	40%	40%	50%	40%	20%	10%	10%	
3	0%	0%	0%	0%	0%	0%	0%	0%	0%	0%	4%	0%	0%	0%	0%	0%	4%	0%	0%	0%	
4	50%	50%	50%	50%	50%	50%	50%	50%	50%	50%	38%	38%	38%	38%	38%	50%	50%	50%	50%	50%	
5	20%	20%	27%	27%	40%	47%	47%	53%	40%	40%	47%	40%	33%	33%	27%	20%	27%	27%	27%	33%	
6	33%	33%	50%	67%	83%	33%	100%	83%	50%	33%	17%	50%	67%	50%	33%	50%	67%	67%	67%	33%	
7	38%	38%	38%	38%	31%	31%	31%	31%	38%	38%	38%	38%	38%	44%	38%	38%	31%	38%	44%	31%	
8	11%	11%	11%	11%	11%	11%	11%	11%	11%	11%	0%	0%	11%	11%	11%	11%	11%	0%	0%	11%	
9	0%	0%	0%	0%	0%	0%	0%	0%	0%	0%	0%	0%	0%	0%	0%	0%	0%	0%	0%	0%	
10	26%	21%	21%	21%	21%	21%	21%	21%	21%	26%	21%	21%	16%	16%	16%	16%	11%	11%	16%	32%	
11	29%	25%	29%	17%	17%	17%	17%	13%	13%	21%	17%	21%	17%	17%	17%	21%	17%	8%	21%	25%	
12	0%	0%	0%	0%	0%	0%	0%	0%	0%	0%	0%	0%	0%	0%	0%	0%	0%	0%	0%	0%	
13	11%	16%	16%	11%	11%	11%	16%	16%	11%	11%	16%	11%	5%	5%	11%	11%	11%	16%	11%	11%	
14	18%	18%	18%	18%	27%	27%	18%	18%	18%	18%	18%	18%	18%	27%	27%	18%	18%	27%	36%	27%	
15	0%	0%	0%	14%	0%	29%	29%	29%	29%	29%	29%	29%	29%	29%	29%	29%	0%	14%	14%	0%	
16	0%	0%	13%	13%	13%	13%	13%	13%	13%	13%	13%	13%	13%	0%	0%	0%	0%	0%	0%	0%	
18	9%	4%	4%	4%	4%	0%	0%	0%	0%	0%	0%	0%	0%	4%	0%	4%	4%	4%	9%	9%	
19	5%	5%	5%	0%	0%	0%	0%	11%	11%	11%	21%	21%	11%	16%	0%	0%	5%	0%	11%	5%	
20	0%	0%	0%	0%	0%	0%	0%	0%	0%	0%	9%	0%	0%	0%	0%	0%	0%	18%	0%	0%	
21	0%	0%	0%	0%	0%	6%	0%	12%	0%	0%	0%	0%	6%	0%	0%	0%	0%	0%	6%	6%	*School Time Bus Zone*
22	0%	0%	0%	20%	0%	20%	0%	0%	0%	0%	0%	0%	0%	0%	0%	0%	0%	0%	0%	0%	*School Time Bus Zone*
23																					*High School Lane removed from practical supply/demand*
24	0%	0%	0%	0%	0%	0%	0%	0%	0%	0%	0%	0%	0%	0%	0%	0%	0%	0%	0%	0%	
25	29%	24%	24%	18%	18%	24%	18%	18%	18%	24%	18%	29%	29%	29%	35%	24%	24%	24%	35%	29%	
26	24%	24%	24%	12%	24%	24%	24%	35%	35%	29%	35%	24%	29%	24%	24%	24%	35%	35%	29%	29%	
27	19%	0%	33%	19%	29%	29%	29%	24%	19%	19%	24%	24%	24%	14%	24%	19%	19%	19%	14%	14%	
28	0%	0%	0%	0%	0%	7%	0%	0%	0%	0%	0%	0%	0%	0%	0%	0%	0%	0%	0%	7%	
29	6%	6%	12%	6%	6%	6%	12%	12%	12%	12%	12%	12%	12%	12%	12%	6%	6%	6%	6%	6%	
30	0%	0%	0%	22%	11%	11%	11%	11%	11%	11%	11%	11%	11%	11%	22%	0%	0%	0%	11%	11%	
31	24%	24%	24%	24%	24%	24%	24%	24%	24%	24%	24%	24%	24%	24%	18%	18%	24%	18%	18%	18%	
Overall Occupancy	**11%**	**9%**	**11%**	**11%**	**12%**	**13%**	**12%**	**14%**	**12%**	**12%**	**13%**	**13%**	**12%**	**12%**	**12%**	**11%**	**11%**	**10%**	**12%**	**12%**	
Spaces Occupied	62	53	65	66	71	74	73	82	69	73	74	74	69	73	69	66	66	61	68	69	
Spare On-street Capacity	342	351	339	*316*	*311*	*308*	331	322	335	331	330	330	335	331	335	316	316	321	*336*	*335*	*Note, school time bus zones removed from supply*

8:30am
Legend
Parking Occupancy
0% - 10%
10% - 30%
30% - 60%
60% - 80%
80% - 100%
Section ID No.
Syntropia: Syntropic Farming Consultancy...
Murwillumbah Tile and Mattress Steam...
HELEN STUBBIN DISTRIBUTION
Sathya Sai College - Primary Campus
Knox Park
Murwillumbah Sikh Temple
Murwillumbah Respiratory Clinic
Repco Murwillumbah
Murwillumbah Public School
Chinese Medicine
Murwillumbah Skate Park
Budget Driver Training
Murwillumbah Early Education Centre
Parsons Bus & Coach
Ricers Residenti Services
SnP Mechanical and Detailing
Murwillumbah Exhaust & Service Centre
Lucas Lookout
Lucas Park
Murwillumbah Rural Fire Brigade
Gary W Fidler Architect
Hockey Tweed
Tech in Town
Temporarily closed
Murwillumbah High School
Fit As a Fiddle
Google
Byangum Rd
Prince St
Condong St
Riverview St
Riverview Ln
Eyles Ln
Eyles Ave
Myrtle St
Spring St
Spring Ln
Florin Ln
Short St
William St
William Ln
Byangum Ln
Eveleigh St
Nullum St
Nullum Ln
Brisbane St
Prince Ln
Factory Ln
Peri St
Murwillumbah Creek
Hartigan St
James St
James Ln
High School Ln
Fulford Ln
1
2
3
4
5
6
7
8
9
10
11
12
13
14
15
16
18
19
20
21
22
24
25
26
27
28
29
30
31

10:30am
Legend
Parking Occupancy
0% - 10%
10% - 30%
30% - 60%
60% - 80%
80% - 100%
Section ID No.
Syntropia: Syntropic Farming Consultancy...
Murwillumbah Tile and Mattress Steam...
HELEN STUBBIN DISTRIBUTION
Sathya Sai College - Primary Campus
Knox Park
Murwillumbah Respiratory Clinic
Repco Murwillumbah
Auto parts store
Murwillumbah Sikh Temple
Murwillumbah Public School
Chinese Medicine
Murwillumbah Skate Park
Budget Driver Training
Murwillumbah Early Education Centre
Murwillumbah Bus Co PTY Ltd
Parsons Bus & Coach
Ricers Residenti Services
SnP Mechanical and Detailing
Murwillumbah Exhaust & Service Centre
Lucas Lookout
Lucas Park
Murwillumbah Rural Fire Brigade
Gary W Fidler Architect
Hockey Tweed
Tech in Town
Temporarily closed
Murwillumbah High School
Fit As a Fiddle
Byangum Rd
Prince St
Prince Ln
Condong St
Riverview St
Riverview Ln
Eyles Ln
Eyles Ave
Myrtle St
Spring St
Spring Ln
Florin Ln
Short St
William St
William Ln
Byangum Ln
Eveleigh St
Nullum St
Nullum Ln
Brisbane St
Factory Ln
Peri St
Murwillumbah Creek
Hartigan St
James St
James Ln
High School Ln
Fulford Ln
Google

2:30pm
Legend
Parking Occupancy
0% - 10%
10% - 30%
30% - 60%
60% - 80%
80% - 100%
Section ID No.
Syntropia: Syntropic Farming Consultancy...
Murwillumbah Tile and Mattress Steam...
HELEN STUBBIN DISTRIBUTION
Sathya Sai College - Primary Campus
Knox Park
Murwillumbah Respiratory Clinic
Repco Murwillumbah
Auto parts store
Murwillumbah Sikh Temple
Murwillumbah Public School
Chinese Medicine
Murwillumbah Skate Park
Budget Driver Training
Murwillumbah Early Education Centre
Murwillumbah Bus Co PTY Ltd
Parsons Bus & Coach
Ricers Residenti Services
SnP Mechanical and Detailing
Murwillumbah Exhaust & Service Centre
Lucas Lookout
Lucas Park
Murwillumbah Rural Fire Brigade
Gary W Fidler Architect
Hockey Tweed
Tech in Town
Temporarily closed
Murwillumbah High School
Fit As a Fiddle
Byangum Rd
Prince St
Condong St
Riverview St
Riverview Ln
Brisbane St
Nullum St
Eyles Ln
Eyles Ave
Myrtle St
Spring St
Spring Ln
Florin Ln
Short St
William St
William Ln
Byangum Ln
Eveleigh St
Prince Ln
Factory Ln
Peri St
Hartigan St
James St
James Ln
High School Ln
Fulford Ln
Google

Attachment B

Sensitivity Test Traffic Analysis

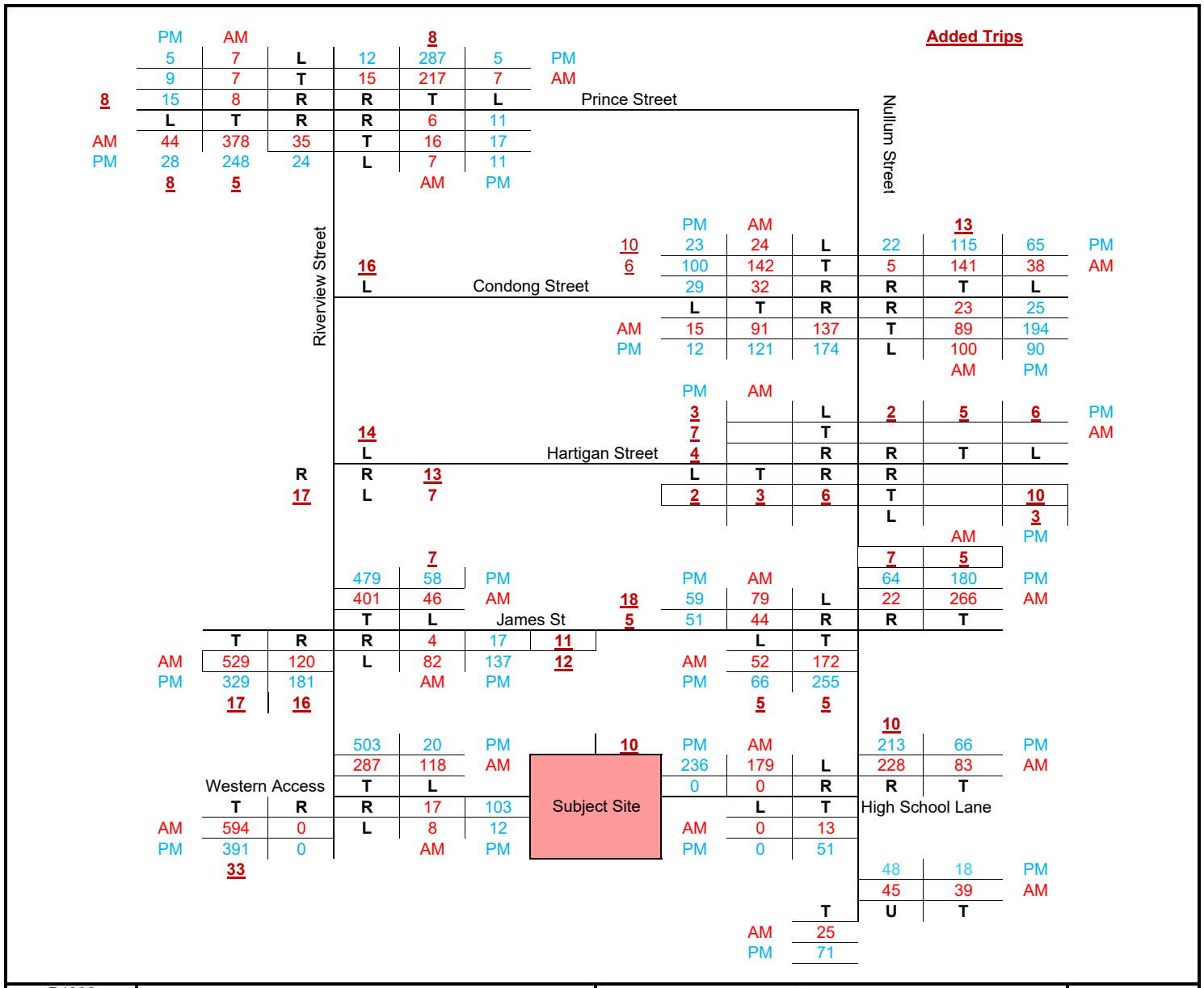

P4992	Murwillumbah Education Campus Transport Assessment 2024 MEC Background + Development Traffic (Sensitivty Test)	Notes: Survey Date 3/03/2021 Peak Hours AM 8:15 9:15 PM 2:45 3:45	Growth Rate: 2.0% Survey Year: 2021 Design Year: 2024	Sheet 6

MOVEMENT SUMMARY

Site: 101 [Nullum Street / James Street - PM Peak - DES_2024 - Sensitivity (Site Folder: DES_2024_PM - Sensitivity Test)]

P4992
Murwillumbah Education Campus
Nullum Street / James Street
Site Category: (None)
Stop (Two-Way)

Vehicle Movement Performance

Mov ID	Turn	INPUT VOLUMES [Total veh/h	HV] %	DEMAND FLOWS [Total veh/h	HV] %	Deg. Satn v/c	Aver. Delay sec	Level of Service	95% BACK OF QUEUE [Veh. veh	Dist] m	Prop. Que	Effective Stop Rate	Aver. No. Cycles	Aver. Speed km/h
South: Nullum Street														
1	L2	66	29.0	69	29.0	0.193	5.9	LOS A	0.0	0.0	0.00	0.12	0.00	48.4
2	T1	255	30.0	268	30.0	0.193	0.0	LOS A	0.0	0.0	0.00	0.12	0.00	56.8
Approach		321	29.8	338	29.8	0.193	1.2	NA	0.0	0.0	0.00	0.12	0.00	54.7
North: Nullum Street														
8	T1	180	44.0	189	44.0	0.166	0.7	LOS A	0.6	5.1	0.28	0.19	0.28	51.9
9	R2	64	4.0	67	4.0	0.166	7.3	LOS A	0.6	5.1	0.28	0.19	0.28	47.3
Approach		244	33.5	257	33.5	0.166	2.4	NA	0.6	5.1	0.28	0.19	0.28	50.7
West: James Street														
10	L2	59	3.0	62	3.0	0.154	9.6	LOS A	0.6	4.0	0.46	0.94	0.46	36.7
12	R2	51	0.0	54	0.0	0.154	12.7	LOS B	0.6	4.0	0.46	0.94	0.46	40.5
Approach		110	1.6	116	1.6	0.154	11.0	LOS B	0.6	4.0	0.46	0.94	0.46	38.6
All Vehicles		675	26.5	711	26.5	0.193	3.3	NA	0.6	5.1	0.18	0.28	0.18	50.0

Site Level of Service (LOS) Method: Delay (SIDRA). Site LOS Method is specified in the Parameter Settings dialog (Site tab).
Vehicle movement LOS values are based on average delay per movement.
Minor Road Approach LOS values are based on average delay for all vehicle movements.
NA: Intersection LOS and Major Road Approach LOS values are Not Applicable for two-way sign control since the average delay is not a good LOS measure due to zero delays associated with major road movements.
Delay Model: SIDRA Standard (Geometric Delay is included).
Queue Model: SIDRA Standard.
Gap-Acceptance Capacity: SIDRA Standard (Akçelik M3D).
HV (%) values are calculated for All Movement Classes of All Heavy Vehicle Model Designation.

MOVEMENT SUMMARY

Site: 101 [Riverview Street / James Street - PM Peak - DES_2024 - Sensitivity (Site Folder: DES_2024_PM - Sensitivity Test)]

P4992
Murwillumbah Education Campus
Riverview Street / James Street
Site Category: (None)
Give-Way (Two-Way)

Vehicle Movement Performance

Mov ID	Turn	INPUT VOLUMES [Total veh/h	HV] %	DEMAND FLOWS [Total veh/h	HV] %	Deg. Satn v/c	Aver. Delay sec	Level of Service	95% BACK OF QUEUE [Veh. veh	Dist] m	Prop. Que	Effective Stop Rate	Aver. No. Cycles	Aver. Speed km/h
East: James Street														
4a	L1	137	12.0	144	12.0	0.206	8.0	LOS A	0.8	6.1	0.55	0.78	0.55	37.4
6b	R3	17	0.0	18	0.0	0.206	14.9	LOS B	0.8	6.1	0.55	0.78	0.55	38.4
Approach		154	10.7	162	10.7	0.206	8.8	LOS A	0.8	6.1	0.55	0.78	0.55	37.5
NorthEast: Riverview Street														
24b	L3	58	0.0	61	0.0	0.300	6.5	LOS A	0.0	0.0	0.00	0.07	0.00	54.3
8	T1	479	2.0	504	2.0	0.300	0.0	LOS A	0.0	0.0	0.00	0.07	0.00	57.6
Approach		537	1.8	565	1.8	0.300	0.7	NA	0.0	0.0	0.00	0.07	0.00	57.2
SouthWest: Riverview Street														
2	T1	329	5.0	346	5.0	0.380	2.6	LOS A	2.7	19.5	0.52	0.29	0.66	47.9
32a	R1	181	2.0	191	2.0	0.380	8.4	LOS A	2.7	19.5	0.52	0.29	0.66	46.0
Approach		510	3.9	537	3.9	0.380	4.6	NA	2.7	19.5	0.52	0.29	0.66	47.2
All Vehicles		1201	3.8	1264	3.8	0.380	3.4	NA	2.7	19.5	0.29	0.26	0.35	49.2

Site Level of Service (LOS) Method: Delay (SIDRA). Site LOS Method is specified in the Parameter Settings dialog (Site tab).
Vehicle movement LOS values are based on average delay per movement.
Minor Road Approach LOS values are based on average delay for all vehicle movements.
NA: Intersection LOS and Major Road Approach LOS values are Not Applicable for two-way sign control since the average delay is not a good LOS measure due to zero delays associated with major road movements.
Delay Model: SIDRA Standard (Geometric Delay is included).
Queue Model: SIDRA Standard.
Gap-Acceptance Capacity: SIDRA Standard (Akçelik M3D).
HV (%) values are calculated for All Movement Classes of All Heavy Vehicle Model Designation.

MOVEMENT SUMMARY

Site: 101 [Nullum Street / Condong Street - PM Peak - DES_2024 - Sensitivity (Site Folder: DES_2024_PM - Sensitivity Test)]

P4992
Murwillumbah Education Campus
Nullum Street / Condong Street
Site Category: (None)
Stop (Two-Way)

Vehicle Movement Performance

Mov ID	Turn	INPUT VOLUMES [Total veh/h	HV] %	DEMAND FLOWS [Total veh/h	HV] %	Deg. Satn v/c	Aver. Delay sec	Level of Service	95% BACK OF QUEUE [Veh. veh	Dist] m	Prop. Que	Effective Stop Rate	Aver. No. Cycles	Aver. Speed km/h
South: Nullum Street														
1	L2	12	0.0	13	0.0	0.217	6.6	LOS A	1.2	9.8	0.37	0.36	0.37	42.1
2	T1	121	22.0	127	22.0	0.217	0.9	LOS A	1.2	9.8	0.37	0.36	0.37	45.4
3	R2	174	21.0	183	21.0	0.217	6.8	LOS A	1.2	9.8	0.37	0.36	0.37	41.6
Approach		307	20.6	323	20.6	0.217	4.5	NA	1.2	9.8	0.37	0.36	0.37	42.8
East: Condong Street														
4	L2	90	0.0	95	0.0	0.474	10.1	LOS B	2.9	20.7	0.50	1.02	0.72	36.0
5	T1	194	3.0	204	3.0	0.474	14.7	LOS B	2.9	20.7	0.50	1.02	0.72	35.6
6	R2	25	4.0	26	4.0	0.474	18.0	LOS C	2.9	20.7	0.50	1.02	0.72	35.3
Approach		309	2.2	325	2.2	0.474	13.6	LOS B	2.9	20.7	0.50	1.02	0.72	35.7
North: Nullum Street														
7	L2	65	2.0	68	2.0	0.122	5.7	LOS A	0.2	1.9	0.09	0.24	0.09	47.4
8	T1	115	46.0	121	46.0	0.122	0.1	LOS A	0.2	1.9	0.09	0.24	0.09	48.6
9	R2	22	5.0	23	5.0	0.122	6.2	LOS A	0.2	1.9	0.09	0.24	0.09	44.6
Approach		202	27.4	213	27.4	0.122	2.6	NA	0.2	1.9	0.09	0.24	0.09	47.7
West: Condong Street														
10	L2	23	8.0	24	8.0	0.319	9.7	LOS A	1.4	10.3	0.54	1.01	0.65	29.4
11	T1	100	1.0	105	1.0	0.319	13.3	LOS B	1.4	10.3	0.54	1.01	0.65	34.7
12	R2	29	36.0	31	36.0	0.319	25.0	LOS C	1.4	10.3	0.54	1.01	0.65	28.7
Approach		152	8.7	160	8.7	0.319	15.0	LOS C	1.4	10.3	0.54	1.01	0.65	32.9
All Vehicles		970	14.3	1021	14.3	0.474	8.6	NA	2.9	20.7	0.38	0.65	0.47	39.0

Site Level of Service (LOS) Method: Delay (SIDRA). Site LOS Method is specified in the Parameter Settings dialog (Site tab).
Vehicle movement LOS values are based on average delay per movement.
Minor Road Approach LOS values are based on average delay for all vehicle movements.
NA: Intersection LOS and Major Road Approach LOS values are Not Applicable for two-way sign control since the average delay is not a good LOS measure due to zero delays associated with major road movements.
Delay Model: SIDRA Standard (Geometric Delay is included).
Queue Model: SIDRA Standard.
Gap-Acceptance Capacity: SIDRA Standard (Akçelik M3D).
HV (%) values are calculated for All Movement Classes of All Heavy Vehicle Model Designation.

SIDRA INTERSECTION 9.0 | Copyright © 2000-2020 Akcelik and Associates Pty Ltd | sidrasolutions.com
Organisation: BITZIOS CONSULTING | Licence: PLUS / Enterprise | Processed: Tuesday, 2 August 2022 1:07:33 PM
Project: P:\P4992 Murwillumbah Education Campus Transport Assessment\Technical Work\Models\P4992 Intersection Models - Sensitivity Test.sip9

MOVEMENT SUMMARY

Site: 101 [Riverview Street / Prince Street - PM Peak - DES_2024 - Sensitivity (Site Folder: DES_2024_PM - Sensitivity Test)]

P4992
Murwillumbah Education Campus
Riverview Street / Prince Street
Site Category: (None)
Give-Way (Two-Way)

Vehicle Movement Performance

Mov ID	Turn	INPUT VOLUMES [Total veh/h	HV] %	DEMAND FLOWS [Total veh/h	HV] %	Deg. Satn v/c	Aver. Delay sec	Level of Service	95% BACK OF QUEUE [Veh. veh	Dist] m	Prop. Que	Effective Stop Rate	Aver. No. Cycles	Aver. Speed km/h
South: Riverview Street														
1	L2	28	26.0	29	26.0	0.179	6.5	LOS A	0.3	2.3	0.11	0.10	0.11	45.8
2	T1	248	6.0	261	6.0	0.179	0.2	LOS A	0.3	2.3	0.11	0.10	0.11	56.7
3	R2	24	13.0	25	13.0	0.179	7.1	LOS A	0.3	2.3	0.11	0.10	0.11	47.7
Approach		300	8.4	316	8.4	0.179	1.3	NA	0.3	2.3	0.11	0.10	0.11	55.0
East: Prince Street														
4	L2	11	0.0	12	0.0	0.058	6.6	LOS A	0.2	1.4	0.48	0.69	0.48	36.3
5	T1	17	6.0	18	6.0	0.058	7.9	LOS A	0.2	1.4	0.48	0.69	0.48	39.7
6	R2	11	0.0	12	0.0	0.058	9.7	LOS A	0.2	1.4	0.48	0.69	0.48	42.1
Approach		39	2.6	41	2.6	0.058	8.0	LOS A	0.2	1.4	0.48	0.69	0.48	39.7
North: Riverview Street														
7	L2	5	0.0	5	0.0	0.177	7.3	LOS A	0.2	1.5	0.06	0.03	0.06	54.8
8	T1	287	4.0	302	4.0	0.177	0.2	LOS A	0.2	1.5	0.06	0.03	0.06	58.7
9	R2	12	55.0	13	55.0	0.177	8.2	LOS A	0.2	1.5	0.06	0.03	0.06	45.5
Approach		304	5.9	320	5.9	0.177	0.6	NA	0.2	1.5	0.06	0.03	0.06	57.9
West: Prince Street														
10	L2	5	0.0	5	0.0	0.048	6.4	LOS A	0.2	1.1	0.49	0.70	0.49	43.9
11	T1	9	0.0	9	0.0	0.048	7.4	LOS A	0.2	1.1	0.49	0.70	0.49	40.0
12	R2	15	0.0	16	0.0	0.048	9.9	LOS A	0.2	1.1	0.49	0.70	0.49	39.4
Approach		29	0.0	31	0.0	0.048	8.5	LOS A	0.2	1.1	0.49	0.70	0.49	40.5
All Vehicles		672	6.6	707	6.6	0.179	1.7	NA	0.3	2.3	0.13	0.13	0.13	54.4

Site Level of Service (LOS) Method: Delay (SIDRA). Site LOS Method is specified in the Parameter Settings dialog (Site tab).
Vehicle movement LOS values are based on average delay per movement.
Minor Road Approach LOS values are based on average delay for all vehicle movements.
NA: Intersection LOS and Major Road Approach LOS values are Not Applicable for two-way sign control since the average delay is not a good LOS measure due to zero delays associated with major road movements.
Delay Model: SIDRA Standard (Geometric Delay is included).
Queue Model: SIDRA Standard.
Gap-Acceptance Capacity: SIDRA Standard (Akçelik M3D).
HV (%) values are calculated for All Movement Classes of All Heavy Vehicle Model Designation.

SIDRA INTERSECTION 9.0 | Copyright © 2000-2020 Akcelik and Associates Pty Ltd | sidrasolutions.com
Organisation: BITZIOS CONSULTING | Licence: PLUS / Enterprise | Processed: Tuesday, 2 August 2022 1:07:33 PM
Project: P:\P4992 Murwillumbah Education Campus Transport Assessment\Technical Work\Models\P4992 Intersection Models - Sensitivity Test.sip9

MOVEMENT SUMMARY

Site: 101 [Nullum Street / Eastern School Access KnD - PM Peak - DES_2024 - Sensitvity (Site Folder: DES_2024_PM - Sensitivity Test)]

P4992
Murwillumbah Education Campus
Nullum Street / Eastern School Access KnD
Site Category: (None)
Give-Way (Two-Way)

Vehicle Movement Performance

Mov ID	Turn	INPUT VOLUMES [Total veh/h	HV] %	DEMAND FLOWS [Total veh/h	HV] %	Deg. Satn v/c	Aver. Delay sec	Level of Service	95% BACK OF QUEUE [Veh. veh	Dist] m	Prop. Que	Effective Stop Rate	Aver. No. Cycles	Aver. Speed km/h
South: Nullum Street														
2	T1	51	0.0	54	0.0	0.025	0.0	LOS A	0.0	0.0	0.00	0.00	0.00	40.0
Approach		51	0.0	54	0.0	0.025	0.0	NA	0.0	0.0	0.00	0.00	0.00	40.0
North: Nullum Street														
8	T1	66	0.0	69	0.0	0.033	0.0	LOS A	0.0	0.0	0.00	0.00	0.00	40.0
9	R2	213	0.0	224	0.0	0.130	3.6	LOS A	0.6	4.5	0.15	0.44	0.15	33.9
Approach		279	0.0	294	0.0	0.130	2.7	NA	0.6	4.5	0.12	0.34	0.12	35.2
West: Eastern School Access KnD														
10	L2	236	0.0	248	0.0	0.159	4.7	LOS A	0.7	5.0	0.15	0.50	0.15	34.4
Approach		236	0.0	248	0.0	0.159	4.7	LOS A	0.7	5.0	0.15	0.50	0.15	34.4
All Vehicles		566	0.0	596	0.0	0.159	3.3	NA	0.7	5.0	0.12	0.37	0.12	35.3

Site Level of Service (LOS) Method: Delay (SIDRA). Site LOS Method is specified in the Parameter Settings dialog (Site tab).
Vehicle movement LOS values are based on average delay per movement.
Minor Road Approach LOS values are based on average delay for all vehicle movements.
NA: Intersection LOS and Major Road Approach LOS values are Not Applicable for two-way sign control since the average delay is not a good LOS measure due to zero delays associated with major road movements.
Delay Model: SIDRA Standard (Geometric Delay is included).
Queue Model: SIDRA Standard.
Gap-Acceptance Capacity: SIDRA Standard (Akçelik M3D).
HV (%) values are calculated for All Movement Classes of All Heavy Vehicle Model Designation.

SIDRA INTERSECTION 9.0 | Copyright © 2000-2020 Akcelik and Associates Pty Ltd | sidrasolutions.com
Organisation: BITZIOS CONSULTING | Licence: PLUS / Enterprise | Processed: Tuesday, 2 August 2022 1:07:34 PM
Project: P:\P4992 Murwillumbah Education Campus Transport Assessment\Technical Work\Models\P4992 Intersection Models - Sensitivity Test.sip9