NOTES:

1. ALL PLAN SHEETS SHOWN IN C1.04 KEY PLAN SHALL BE TO 1:200 SCALE.

2. ALL PLAN SHEETS SHOWN IN C6.01 KEY PLAN SHALL BE TO 1:100 SCALE.

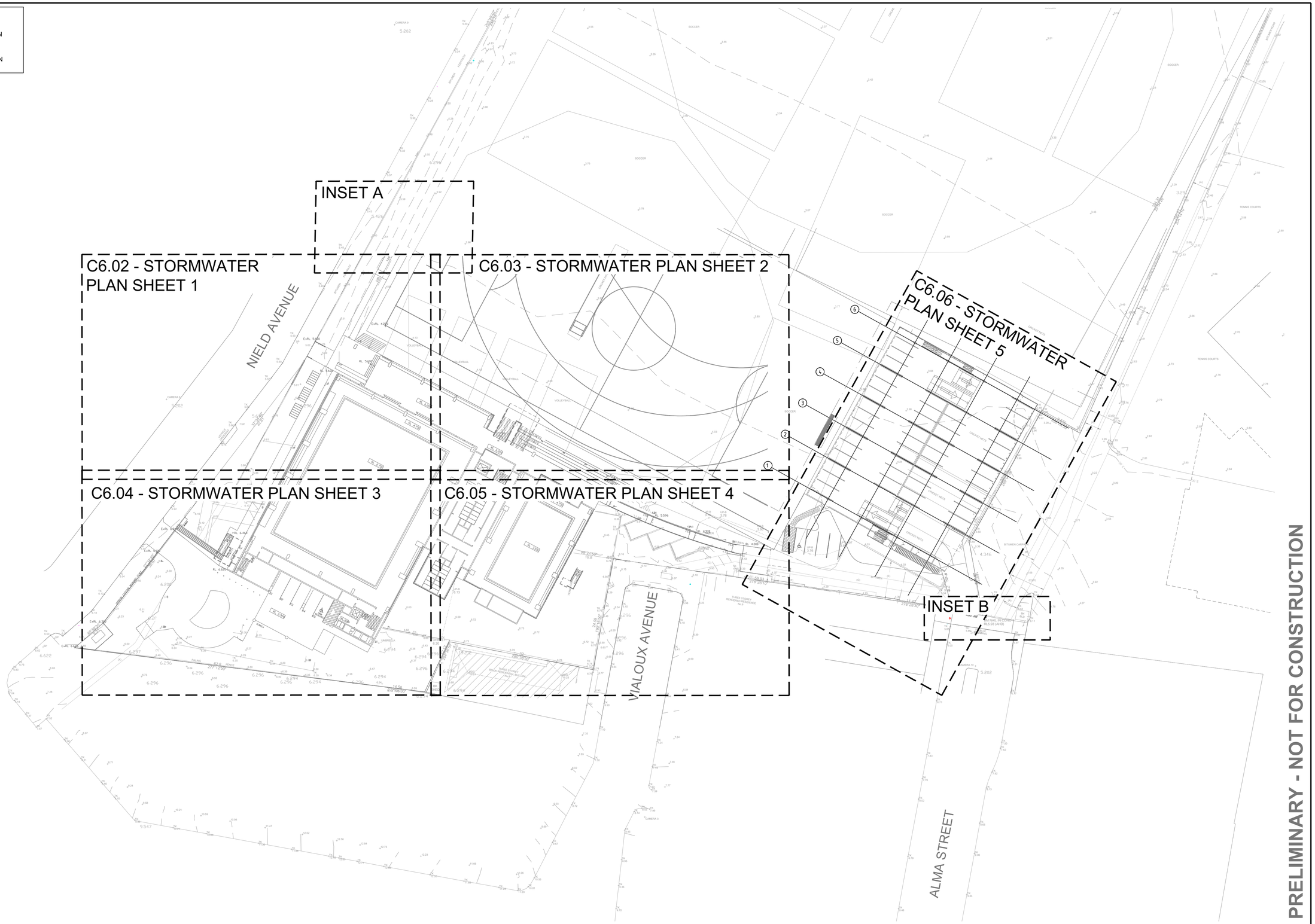

PRELIMINARY - NOT FOR CONSTRUCTION

DO NOT SCALE FROM DRAWINGS, CHECK & VERIFY ALL DIMENSIONS & LEVELS BEFORE COMMENCEMENT OF ANY WORK.

THIS DRAWING IS NOT TO BE COPIED IN PART OR WHOLE WITHOUT WRITTEN PERMISSION FROM WARREN SMITH AND PARTNERS.

NORTH

5 0 5 10 15 20m
PLAN SCALE 1:400 A1 SHEET

REVISION	AMENDMENT	DATE	REVISION	AMENDMENT	DATE
1	90% SSDA ISSUE	21/08/20			
2	95% SSDA ISSUE	03/09/20			
3	SSDA ISSUE	09/09/20			

CLIENT SYDNEY GRAMMAR SCHOOL

PROJECT
SYDNEY GRAMMAR SCHOOL
WEIGALL SPORTS COMPLEX
& CARPARK

PREPARED BY
Warren Smith & Partners Pty Ltd
Level 9, 233 Castlereagh Street, Sydney 2000 NSW Australia
02 9299 1312 wsp@warrensmith.com.au
www.warrensmith.com.au ABN 36 300 430 126
Consulting Engineers
Hydraulic Fire Civil Utilities Infrastructure
SERVING THE CONSTRUCTION INDUSTRY SINCE 1981.

TITLE
STORMWATER KEY PLAN

SCALE	DRAWN	DESIGNED	CHECKED	APPROVED
AS SHOWN	M.T.	M.Cz.	L.S.	L.S.

JOB No.	DRAWING No.	ISSUE
6817000	C6.01	3

DATE	STATUS
SEPTEMBER 2020	SSDA

Xrefs: X-6817000-TB, A1H, X-6817000-SU, Existing Utilities, X-6817000-SU, Boundary, X-6817000-AR, Site Plan, X-6817000-SU, Survey, X-6817000-AR, Ground Floor, X-6817000-AR, Carpark
Plot Date: 09.09.2020@17:08:39 Login Name: mcdcz Cad File: T:\6817000\Drawings\AutoCAD\Civil\Design\Civil 2D\C6.01 Stormwater Key Plan.dwg

LEGEND

	INDICATIVE OVERLAND FLOW ROUTE
Ø450	PIPE DIAMETER AND DIRECTION OF FLOW
SW	STORMWATER PIPE (SIZE <Ø1050)
esw	EXISTING STORMWATER PIPE
es	EXISTING SEWER LINE
Ø225	PIPE DIAMETER AND DIRECTION OF FLOW
S	SEWER DEVIATION
SSD	SUBSOIL DRAINAGE LINE
SSD	SUBSOIL HIGH END RISER
SSD	SUBSOIL INTERMEDIATE RISER
	SUBSOIL DRAINAGE LINE UNDER PAVEMENT
	STORMWATER DEVIATION
	EXISTING EASEMENT
	900 x 900 JUNCTION PIT
	900 x 900 GRATED INLET PIT
	PIT STRUCTURE NUMBER / STORMWATER LINE NUMBER
GD	GRATED TRENCH DRAIN

NOTE:

1. OCEAN PROTECT ENVIROPOD FILTERS ARE TO BE INSTALLED IN PITS: 1/1, 2/1, 3/1, 4/1, 5/1, 6/1, 2/3, 2/4, 3/4, 4/4, 5/4, 1/5, 1/6, 2/6, 3/6. OIL SOAK BY MYCELX TO BE INSTALLED WITHIN THE OCEAN GUARD IN PIT 3/6.
2. REFER TO ARBORIST'S REPORT FOR ALL WORKS WITHIN THE TREE PROTECTION ZONE OF TREES TO BE RETAINED.

INSET A

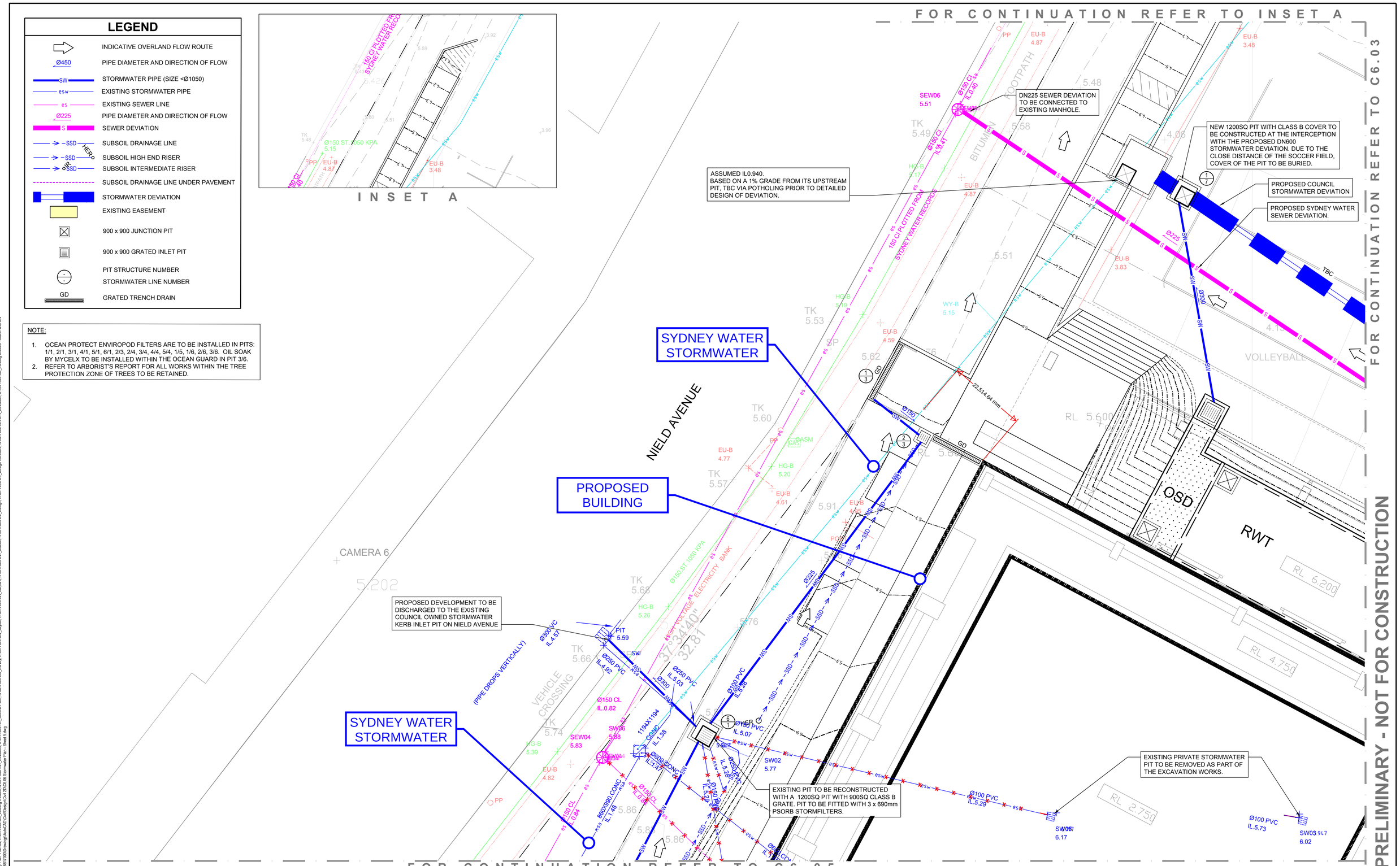

DO NOT SCALE FROM DRAWINGS, CHECK & VERIFY ALL DIMENSIONS & LEVELS BEFORE COMMENCEMENT OF ANY WORK.

THIS DRAWING IS NOT TO BE COPIED IN PART OR WHOLE WITHOUT WRITTEN PERMISSION FROM WARREN SMITH AND PARTNERS.

NORTH

1.0 0 1.0 2.0 3.0 4.0 5.0m
PLAN SCALE 1:100 A1 SHEET

REVISION	AMENDMENT	DATE	REVISION	AMENDMENT	DATE
1	90% SSDA ISSUE	21/08/20			
2	95% SSDA ISSUE	03/09/20			
3	SSDA ISSUE	09/09/20			

CLIENT SYDNEY GRAMMAR SCHOOL

PROJECT
SYDNEY GRAMMAR SCHOOL
WEIGALL SPORTS COMPLEX
& CARPARK

PREPARED BY
Warren Smith & Partners
Warren Smith & Partners Pty Ltd
Level 9, 233 Castlereagh Street, Sydney 2000 NSW Australia
02 9299 1312 wsp@warrensmith.com.au
www.warrensmith.com.au ABN 36 300 430 126
Consulting Engineers
Hydraulic Fire Civil Utilities Infrastructure
SERVING THE CONSTRUCTION INDUSTRY SINCE 1981.

TITLE
STORMWATER PLAN - SHEET 1

SCALE	DRAWN	DESIGNED	CHECKED	APPROVED
AS SHOWN	M.T.	M.Cz.	L.S.	L.S.

JOB No.	DRAWING No.	ISSUE
6817000	C6.02	3

DATE	STATUS
JANUARY 2019	SSDA

Xref: X:\6817000\TB_A1H_X:\6817000\SU_Boundary X:\6817000\SU_Existing Utilities X:\6817000\SU_Survey X:\6817000\SW_Deviation X:\6817000\AR_Ground Floor X:\6817000\AR_Carpark X:\6817000\SW_Layout X:\6817000\SW_Subsoil X:\6817000\DE_Design_X:\6817000\DE_Design Contours_X:\6817000\SEWER_Deviation_X:\6817000\SU_Existing Utilities - Sewer and SW
Plot Date: 10:09:2020@16:52:26 Login Name: NGupta Cad File: T:\6817000\Drawings\AutoCAD\Civil\Design\Civil 2D\C6.M Stormwater Plan - Sheet 5.dwg

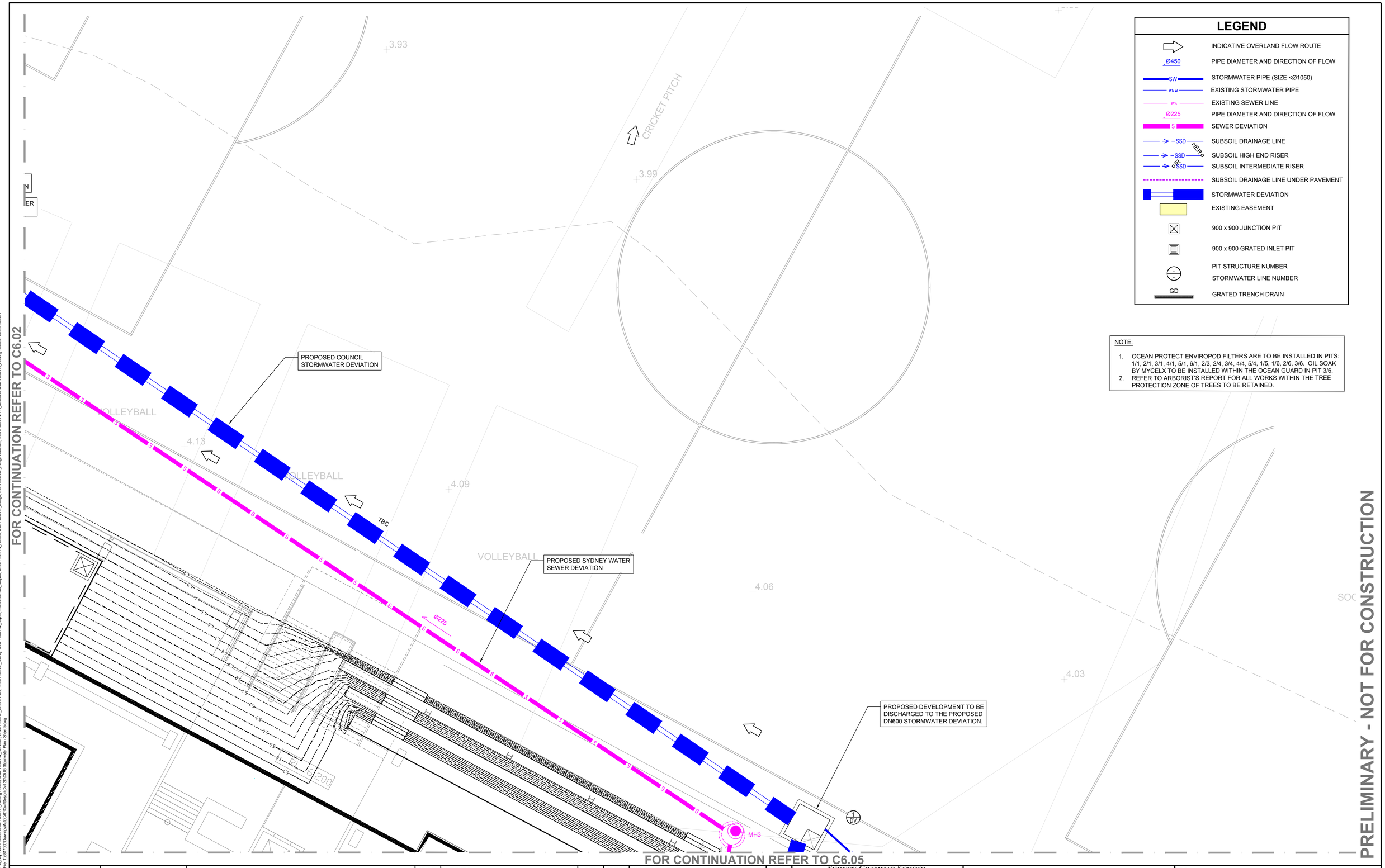

NOTE:

1. OCEAN PROTECT ENVIROPOD FILTERS ARE TO BE INSTALLED IN PITS: 1/1, 2/1, 3/1, 4/1, 5/1, 6/1, 2/3, 2/4, 3/4, 4/4, 5/4, 1/5, 1/6, 2/6, 3/6. OIL SOAK BY MYCELX TO BE INSTALLED WITHIN THE OCEAN GUARD IN PIT 3/6.
2. REFER TO ARBORIST'S REPORT FOR ALL WORKS WITHIN THE TREE PROTECTION ZONE OF TREES TO BE RETAINED.

DO NOT SCALE FROM DRAWINGS, CHECK & VERIFY ALL DIMENSIONS & LEVELS BEFORE COMMENCEMENT OF ANY WORK.

THIS DRAWING IS NOT TO BE COPIED IN PART OR WHOLE WITHOUT WRITTEN PERMISSION FROM WARREN SMITH AND PARTNERS.

NORTH

1.0 0 1.0 2.0 3.0 4.0 5.0m
PLAN SCALE 1:100 A1 SHEET

REVISION	AMENDMENT	DATE	REVISION	AMENDMENT	DATE
1	90% SSDA ISSUE	21/08/20			
2	95% SSDA ISSUE	03/09/20			
3	SSDA ISSUE	09/09/20			

CLIENT SYDNEY GRAMMAR SCHOOL

PROJECT
SYDNEY GRAMMAR SCHOOL
WEIGALL SPORTS COMPLEX
& CARPARK

PREPARED BY

Warren Smith & Partners
Warren Smith & Partners Pty Ltd
Level 9, 233 Castlereagh Street, Sydney 2000 NSW Australia
02 9299 1312 wsp@warrensmith.com.au
www.warrensmith.com.au ABN 36 300 430 126
Consulting Engineers
Hydraulic Fire Civil Utilities Infrastructure
GCC ISO 9001 Certified
SERVING THE CONSTRUCTION INDUSTRY SINCE 1981.

TITLE
STORMWATER PLAN - SHEET 2

SCALE	DRAWN	DESIGNED	CHECKED	APPROVED
AS SHOWN	M.T.	M.Cz.	L.S.	L.S.

JOB No.	DRAWING No.	ISSUE
6817000	C6.03	3

DATE	STATUS
JANUARY 2019	SSDA

Xrefs: X-6817000-TB, A1H, X-6817000-SU, Boundary ; X-6817000-SU, Existing Utilities ; X-6817000-SW, Deviation ; X-6817000-AR, Ground Floor ; X-6817000-SU, Survey ; X-6817000-SW, Layout ; X-6817000-AR, Carpark ; X-6817000-SW, Subsoil ; X-6817000-DE, Design ; X-6817000-DE, Design Contours ; X-6817000-SEWER, Deviation ; X-6817000-SU, Existing Utilities - Sewer and SW
Plot Date: 10.09.2020@16:55:37 Login Name: NGupta Cad File: T:\6817000\Drawings\AutoCAD\CAd\Design\Civil 25\C6.06 Stormwater Plan - Sheet 1.dwg

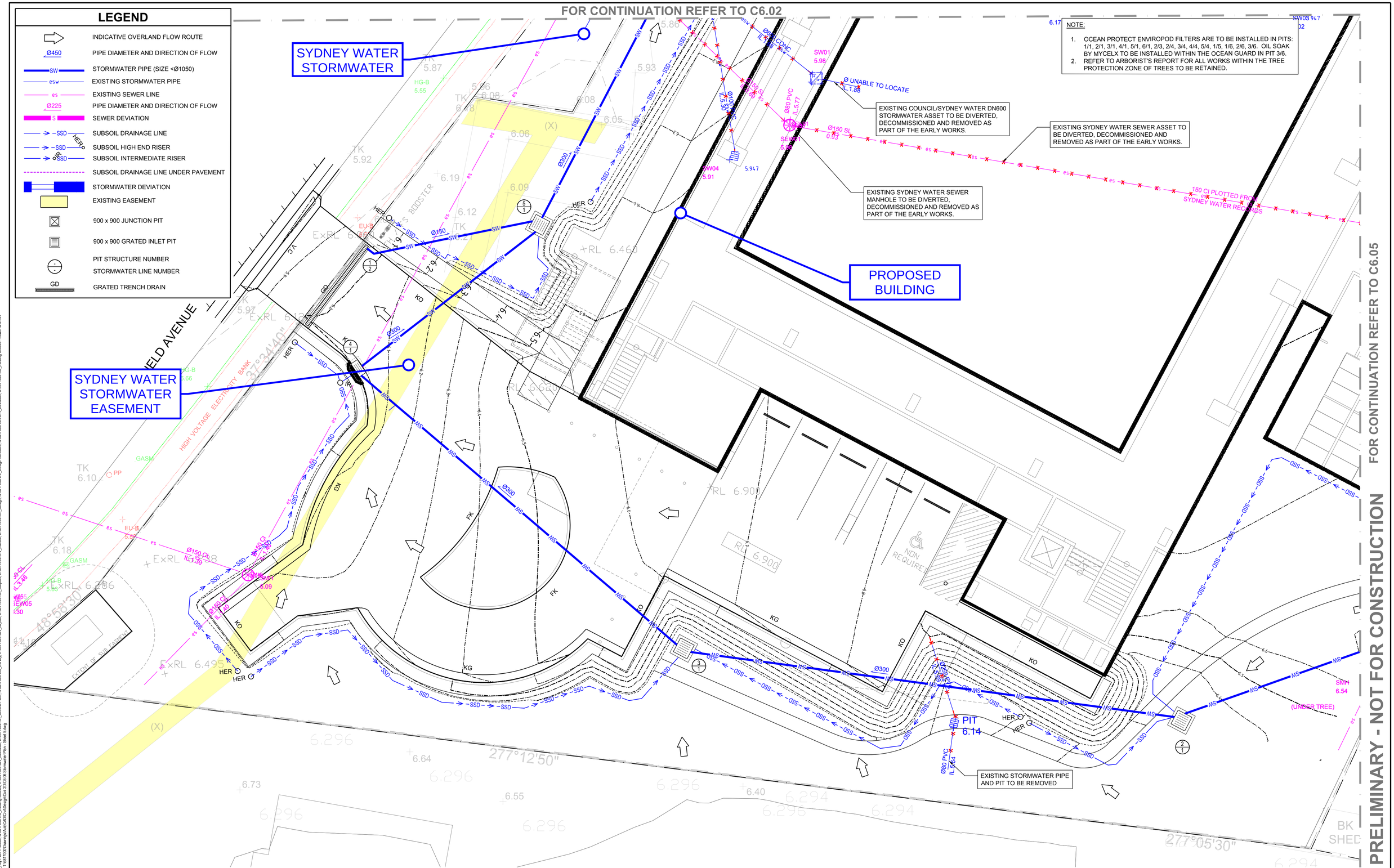

DO NOT SCALE FROM DRAWINGS, CHECK & VERIFY ALL DIMENSIONS & LEVELS BEFORE COMMENCEMENT OF ANY WORK.

THIS DRAWING IS NOT TO BE COPIED IN PART OR WHOLE WITHOUT WRITTEN PERMISSION FROM WARREN SMITH AND PARTNERS.

NORTH

1.0 0 1.0 2.0 3.0 4.0 5.0m
PLAN SCALE 1:100 A1 SHEET

REVISION	AMENDMENT	DATE	REVISION	AMENDMENT	DATE
1	90% SSDA ISSUE	21/08/20			
2	95% SSDA ISSUE	03/09/20			
3	SSDA ISSUE	09/09/20			

CLIENT SYDNEY GRAMMAR SCHOOL

PROJECT
SYDNEY GRAMMAR SCHOOL WEIGALL SPORTS COMPLEX & CARPARK

PREPARED BY
Warren Smith & Partners
Warren Smith & Partners Pty Ltd
Level 9, 233 Castlereagh Street, Sydney 2000 NSW Australia
02 9299 1312 wsp@warrensmith.com.au
www.warrensmith.com.au ABN 36 300 430 126
Consulting Engineers
Hydraulic Fire Civil Utilities Infrastructure
GCC ISO 9001 Certified
SERVING THE CONSTRUCTION INDUSTRY SINCE 1981.

TITLE
STORMWATER PLAN - SHEET 3

SCALE	DRAWN	DESIGNED	CHECKED	APPROVED
AS SHOWN	M.T.	M.Cz.	L.S.	L.S.

JOB No.	DRAWING No.	ISSUE
6817000	C6.04	3

DATE	STATUS
JANUARY 2019	SSDA

Xrefs: X:6817000-TB_A1H, X:6817000-SU_Boundary, X:6817000-TB_Key Plan Frames, X:6817000-SU_Existing Utilities, X:6817000-SW_Deviation, X:6817000-AR_Ground Floor, X:6817000-SU_Survey, X:6817000-SW_Layout, X:6817000-AR_Carpark, X:6817000-SW_Subsoil, X:6817000-DE_Design, X:6817000-DE_Design Contours, X:6817000-SEWER_Deviation, X:6817000-SU_Existing Utilities - Sewer and SW
Plot Date: 10:09:2020@15:29:39 Login Name: NGupta Cad File: T:\6817000\Drawings\AutoCAD\Civil\Design\Civil 2D\C6.06 Stormwater Plan - Sheet 5.dwg

FOR CONTINUATION REFER TO C6.03

FOR CONTINUATION REFER TO C6.04

FOR CONTINUATION REFER TO C6.06

PRELIMINARY - NOT FOR CONSTRUCTION

NOTE:

1. OCEAN PROTECT ENVIROPOD FILTERS ARE TO BE INSTALLED IN PITS: 1/1, 2/1, 3/1, 4/1, 5/1, 6/1, 2/3, 2/4, 3/4, 4/4, 5/4, 1/5, 1/6, 2/6, 3/6. OIL SOAK BY MYCELX TO BE INSTALLED WITHIN THE OCEAN GUARD IN PIT 3/6.
2. REFER TO ARBORIST'S REPORT FOR ALL WORKS WITHIN THE TREE PROTECTION ZONE OF TREES TO BE RETAINED.

PROPOSED 2.25m DIAMATER MANHOLE WITH CLASS B 900SQ GRATE TO BE FITTED WITH 6 x 690mm PSORB STORMFILTERS

PROPOSED COUNCIL STORMWATER DEVIATION

DN600 STORMWATER TO BE DEVIATED FROM EXISTING PIT

DN225 SEWER TO BE DEVIATED FROM THIS LOCATION

PROPOSED SYDNEY WATER SEWER DEVIATION

SEWER PIT UNDERNEATH TENNIS COURT

EXISTING SEWER PIPE TO BE REMOVED

SEWER PIPE PLOTTED FROM SYDNEY WATER RECORDS

VALOUX AVENUE

THREE STOREY BRICK RESIDENTIAL BUILDING No.8

THREE STOREY RENDERED RESIDENCE

LEGEND

- INDICATIVE OVERLAND FLOW ROUTE
- Ø450 — PIPE DIAMETER AND DIRECTION OF FLOW
- SW — STORMWATER PIPE (SIZE <Ø1050)
- esw — EXISTING STORMWATER PIPE
- es — EXISTING SEWER LINE
- Ø225 — PIPE DIAMETER AND DIRECTION OF FLOW
- S — SEWER DEVIATION
- SSD — SUBSOIL DRAINAGE LINE
- SSD — SUBSOIL HIGH END RISER
- SSD — SUBSOIL INTERMEDIATE RISER
- SUBSOIL DRAINAGE LINE UNDER PAVEMENT
- STORMWATER DEVIATION
- EXISTING EASEMENT
- 900 x 900 JUNCTION PIT
- 900 x 900 GRATED INLET PIT
- PIT STRUCTURE NUMBER
- STORMWATER LINE NUMBER
- GD — GRATED TRENCH DRAIN

DO NOT SCALE FROM DRAWINGS, CHECK & VERIFY ALL DIMENSIONS & LEVELS BEFORE COMMENCEMENT OF ANY WORK.

THIS DRAWING IS NOT TO BE COPIED IN PART OR WHOLE WITHOUT WRITTEN PERMISSION FROM WARREN SMITH AND PARTNERS.

NORTH

1.0 0 1.0 2.0 3.0 4.0 5.0m
PLAN SCALE 1:100 A1 SHEET

REVISION	AMENDMENT	DATE	REVISION	AMENDMENT	DATE
1	90% SSDA ISSUE	21/08/20			
2	95% SSDA ISSUE	03/09/20			
3	SSDA ISSUE	09/09/20			

CLIENT SYDNEY GRAMMAR SCHOOL

PROJECT
SYDNEY GRAMMAR SCHOOL
WEIGALL SPORTS COMPLEX
& CARPARK

PREPARED BY
Warren Smith & Partners Pty Ltd
Level 9, 233 Castlereagh Street, Sydney 2000 NSW Australia
02 9299 1312 wsp@warrensmith.com.au
www.warrensmith.com.au ABN 36 300 430 126
Consulting Engineers
Hydraulic Fire Civil Utilities Infrastructure
SERVING THE CONSTRUCTION INDUSTRY SINCE 1981.

TITLE
STORMWATER PLAN - SHEET 4

SCALE	DRAWN	DESIGNED	CHECKED	APPROVED
AS SHOWN	M.T.	M.Cz.	L.S.	L.S.

JOB No.	DRAWING No.	ISSUE
6817000	C6.05	3

DATE	STATUS
JANUARY 2019	SSDA

Xrefs: X-6817000-TB, ATH; X-6817000-SU_Boundary; X-6817000-TB_Key Plan; Frames; X-6817000-SU_Existing Utilities; X-6817000-SW_Deviation; X-6817000-AR_Ground Floor; X-6817000-SU_Survey; X-6817000-SW_Layout; X-6817000-AR_Carpark; X-6817000-SW_Subsoil; X-6817000-SW_Stormwater Plan - Sheet 1.dwg
Plot Date: 10/09 2020@16:57:31 Login Name: MCzyla Cad File: T:\6817000\Drawings\AutoCAD\Civil\Design\Civil 22\C06.06 Stormwater Plan - Sheet 1.dwg

FOR CONTINUATION REFER TO INSET C6.05

CARPARK HYDRAULIC ROOF DRAINAGE TO CONNECTION TO PITS 1/6 , 2/6 , 3/6.

EXISTING VEHICULAR CROSSING TO BE EXTENDED AS SHOWN. EXISTING STORMWATER KERB INLET PITS WITH LINTELS TO BE ADJUSTED AND NEW CLASS E BOLT DOWN V-GRATES (2 X 900 X 600) TO BE PROVIDED TO THE STORMWATER PITS WITHIN THE VEHICULAR CROSSING.

ALMA STREET

FOR CONTINUATION REFER TO INSET B

LEGEND

	INDICATIVE OVERLAND FLOW ROUTE
Ø450	PIPE DIAMETER AND DIRECTION OF FLOW
SW	STORMWATER PIPE (SIZE <Ø1050)
esw	EXISTING STORMWATER PIPE
es	EXISTING SEWER LINE
Ø225	PIPE DIAMETER AND DIRECTION OF FLOW
S	SEWER DEVIATION
SSD	SUBSOIL DRAINAGE LINE
SSD HER O	SUBSOIL HIGH END RISER
SSD	SUBSOIL INTERMEDIATE RISER
	SUBSOIL DRAINAGE LINE UNDER PAVEMENT
	STORMWATER DEVIATION
	EXISTING EASEMENT
	900 x 900 JUNCTION PIT
	900 x 900 GRATED INLET PIT
	PIT STRUCTURE NUMBER
	STORMWATER LINE NUMBER
GD	GRATED TRENCH DRAIN

NOTE:

1. OCEAN PROTECT ENVIROPOD FILTERS ARE TO BE INSTALLED IN PITS: 1/1, 2/1, 3/1, 4/1, 5/1, 6/1, 2/3, 2/4, 3/4, 4/4, 5/4, 1/5, 1/6, 2/6, 3/6. OIL SOAK BY MYCELX TO BE INSTALLED WITHIN THE OCEAN GUARD IN PIT 3/6.
2. REFER TO ARBORIST'S REPORT FOR ALL WORKS WITHIN THE TREE PROTECTION ZONE OF TREES TO BE RETAINED.

INSET B

NORTH

PRELIMINARY - NOT FOR CONSTRUCTION

DO NOT SCALE FROM DRAWINGS, CHECK & VERIFY ALL DIMENSIONS & LEVELS BEFORE COMMENCEMENT OF ANY WORK.

THIS DRAWING IS NOT TO BE COPIED IN PART OR WHOLE WITHOUT WRITTEN PERMISSION FROM WARREN SMITH AND PARTNERS.

NORTH

1.0 0 1.0 2.0 3.0 4.0 5.0m
PLAN SCALE 1:100 A1 SHEET

REVISION	AMENDMENT	DATE	REVISION	AMENDMENT	DATE
1	90% SSDA ISSUE	21/08/20			
2	95% SSDA ISSUE	03/09/20			
3	SSDA ISSUE	09/09/20			

CLIENT SYDNEY GRAMMAR SCHOOL

PROJECT
SYDNEY GRAMMAR SCHOOL
WEIGALL SPORTS COMPLEX
& CARPARK

PREPARED BY
Warren Smith & Partners Pty Ltd
Level 9, 233 Castlereagh Street, Sydney 2000 NSW Australia
02 9299 1312 wsp@warrensmith.com.au
www.warrensmith.com.au ABN 36 300 430 126
Consulting Engineers
Hydraulic Fire Civil Utilities Infrastructure
SERVING THE CONSTRUCTION INDUSTRY SINCE 1981.

TITLE
STORMWATER PLAN - SHEET 5

SCALE	DRAWN	DESIGNED	CHECKED	APPROVED
AS SHOWN	M.T.	M.Cz.	L.S.	L.S.

JOB No.	DRAWING No.	ISSUE
6817000	C6.06	3

DATE	STATUS
JANUARY 2019	SSDA

Xrefs: X-6817000-TB_A1H, X-6817000-SU_Boundary, X-6817000-TB_Key Plan, Frames, X-6817000-SU_Existing Utilities, X-6817000-SW_Deviation, X-6817000-AR_Ground Floor, X-6817000-SU_Survey, X-6817000-SW_Layout, X-6817000-AR_Carpark, X-6817000-SW_Subsoil, X-6817000-DE_Design, X-6817000-DE_Design Contours, X-6817000-SEWER_Deviation, X-6817000-SU_Existing Utilities - Sewer and SW
Plot Date: 10/09/2020@17:02:25 Login Name: NGupta Cad File: T-6817000Drawings\AutoCAD\Cad\Design\Civil 25\C6.06 Stormwater Plan - Sheet 5.dwg

NAME	SURFACE ELEV. (m)	PIT DEPTH (m)	PIT SIZE AND TYPE	FROM	TO	LENGTH (m)	U/S IL (m)	D/S IL (m)	SLOPE (%)	PIPE TYPE	DIA (mm)	No. PIPES
Pit 1/1	6.7	0.75	900SQ PIT CLASS B GRATE	Pit 1/1	Pit 2/1	23.74	5.95	5.63	1.35	RCP CLASS 3	300	1
Pit 2/1	6.38	0.78	900SQ PIT CLASS B GRATE	Pit 2/1	Pit 3/1	28.31	5.60	5.47	0.46	RCP CLASS 3	300	1
Pit 3/1	6.25	0.81	900SQ PIT CLASS B GRATE	Pit 3/1	Pit 4/1	24.07	5.44	5.12	1.33	RCP CLASS 3	300	1
Pit 4/1	6.02	0.93	900SQ PIT WITH 450 x 900 GLASS D SINGLE GRATE WITH 1.2m LINTEL OPENING	Pit 4/1	Pit 5/1	12.74	5.09	5.02	0.55	RCP CLASS 3	300	1
Pit 5/1	6.08	1.09	900SQ PIT CLASS B GRATE	Pit 5/1	Pit 6/1	19.23	4.99	4.80	0.99	RCP CLASS 3	300	1
Pit 6/1	5.78	1.12	1200SQ PIT WITH 900SQ CLASS B GRATE	Pit 6/1	Existing Pit on Nield Avenue	7.31	4.66	4.60	0.82	RCP CLASS 3	300	1
Pit 1/2	VARIES 5.93 - 5.96	0.20m - 0.26m	6.00m LONG K200 ACO TRENCH DRAINS WITH CLASS D HEELSAFE GRATE	Pit 1/2	Pit 5/1	9.86	5.33	5.23	1.01	uPVC (SN8)	150	1
Pit 1/3	VARIES 5.60 - 5.61	0.20m - 0.24m	3.8m LONG K200 ACO TRENCH DRAINS WITH CLASS B HEELSAFE GRATE	Pit 1/3	Pit 2/3	3.32	5	4.95	1.51	uPVC (SN8)	150	1
Pit 2/3	5.61	0.69	600SQ PIT CLASS B GRATE; 3.2m LONG K200 ACO TRENCH DRAINS WITH CLASS B HEELSAFE GRATE	Pit 2/3	Pit 6/1	20.53	4.92	4.71	1.02	RCP CLASS 3	225	1
Pit 1/4	VARIES 5.52 - 5.58	0.20m - 0.26m	5.36m LONG K200 ACO TRENCH DRAINS WITH CLASS D HEELSAFE GRATE	Pit 1/4	Pit 2/4	9.94	4.77	3.80	9.76	uPVC (SN8)	150	1
Pit 2/4	4.4	0.68	600SQ PIT WITH CLASS B GRATE	Pit 2/4	Pit 3/4	22.82	3.72	3.29	1.88	uPVC (SN8)	225	1
Pit 3/4	4.12	1.79	900SQ PIT CLASS B GRATE	Pit 3/4	Pit 4/4	13.61	2.33	2.26	0.51	RCP CLASS 3	375	1
Pit 4/4	4.31	2.08	900SQ PIT CLASS B GRATE; 1.8m LONG K200 ACO TRENCH DRAINS WITH CLASS B HEELSAFE GRATE	Pit 4/4	Pit 5/4	12.25	2.23	2.16	0.57	RCP CLASS 3	375	1
Pit 5/4	4.16	2.03	2.25m DIAMETER MANHOLE WITH 900SQ CLASS B GRATE	Pit 5/4	Deviation Pit	9.55	2.13	2	1.36	RCP CLASS 3	375	1
Pit 1/5	5.10	0.68	600SQ CLASS B GRATE	Pit 1/5	Pit 5/4	6.31	4.42	3.47	13.75	uPVC (SN8)	225	1
Pit 1/6	3.83	0.75	900SQ PIT CLASS B COVER	Pit 1/6	Pit 2/6	13.94	3.08	3.01	0.50	RCP CLASS 3	300	1
Pit 2/6	4.09	1.11	900SQ PIT CLASS B COVER	Pit 2/6	Pit 3/6	15.15	2.98	2.90	0.53	RCP CLASS 3	300	1
Pit 3/6	3.93	1.53	900SQ PIT CLASS B COVER	Pit 3/6	Pit 3/4	7.22	2.4	2.36	0.55	RCP CLASS 3	375	1
				OSD	Pit 1/7	12.21	4	3.32	5.57	RCP CLASS 3	300	1
Pit 1/7	4.15	2.38	1200SQ PIT WITH CLASS B COVER									

PRELIMINARY - NOT FOR CONSTRUCTION

DO NOT SCALE FROM DRAWINGS, CHECK & VERIFY ALL DIMENSIONS & LEVELS BEFORE COMMENCEMENT OF ANY WORK.

THIS DRAWING IS NOT TO BE COPIED IN PART OR WHOLE WITHOUT WRITTEN PERMISSION FROM WARREN SMITH AND PARTNERS.

REVISION	AMENDMENT	DATE	REVISION	AMENDMENT	DATE
1	95% SSDA ISSUE	03/09/20			
2	SSDA ISSUE	09/09/20			

CLIENT SYDNEY GRAMMAR SCHOOL

PROJECT
SYDNEY GRAMMAR SCHOOL
WEIGALL SPORTS COMPLEX
& CARPARK

PREPARED BY
Warren Smith & Partners
Warren Smith & Partners Pty Ltd
Level 9, 233 Castlereagh Street, Sydney 2000 NSW Australia
02 9299 1312 wsp@warrensmith.com.au
www.warrensmith.com.au ABN 36 300 430 126
Consulting Engineers
Hydraulic Fire Civil Utilities Infrastructure
SERVING THE CONSTRUCTION INDUSTRY SINCE 1981.

TITLE
STORMWATER PIT SCHEDULE

SCALE	DRAWN	DESIGNED	CHECKED	APPROVED
AS SHOWN	M.T.	M.Cz.	L.S.	L.S.

JOB No.	DRAWING No.	ISSUE
6817000	C6.07	2

DATE	STATUS
SEPTEMBER 2020	SSDA

Xref: X:\6817000\TB_A1H
Plot Date: 10.09.2020@16:51:28 Login Name: mccarrosta Cad File: T:\6817000\Drawings\AutoCAD\Civil\Design\Civil 2D\C6.07 Stormwater Pit Schedule.dwg

0 10 20 30 40 50 60 70 80 90 100 110 120 130 140 150

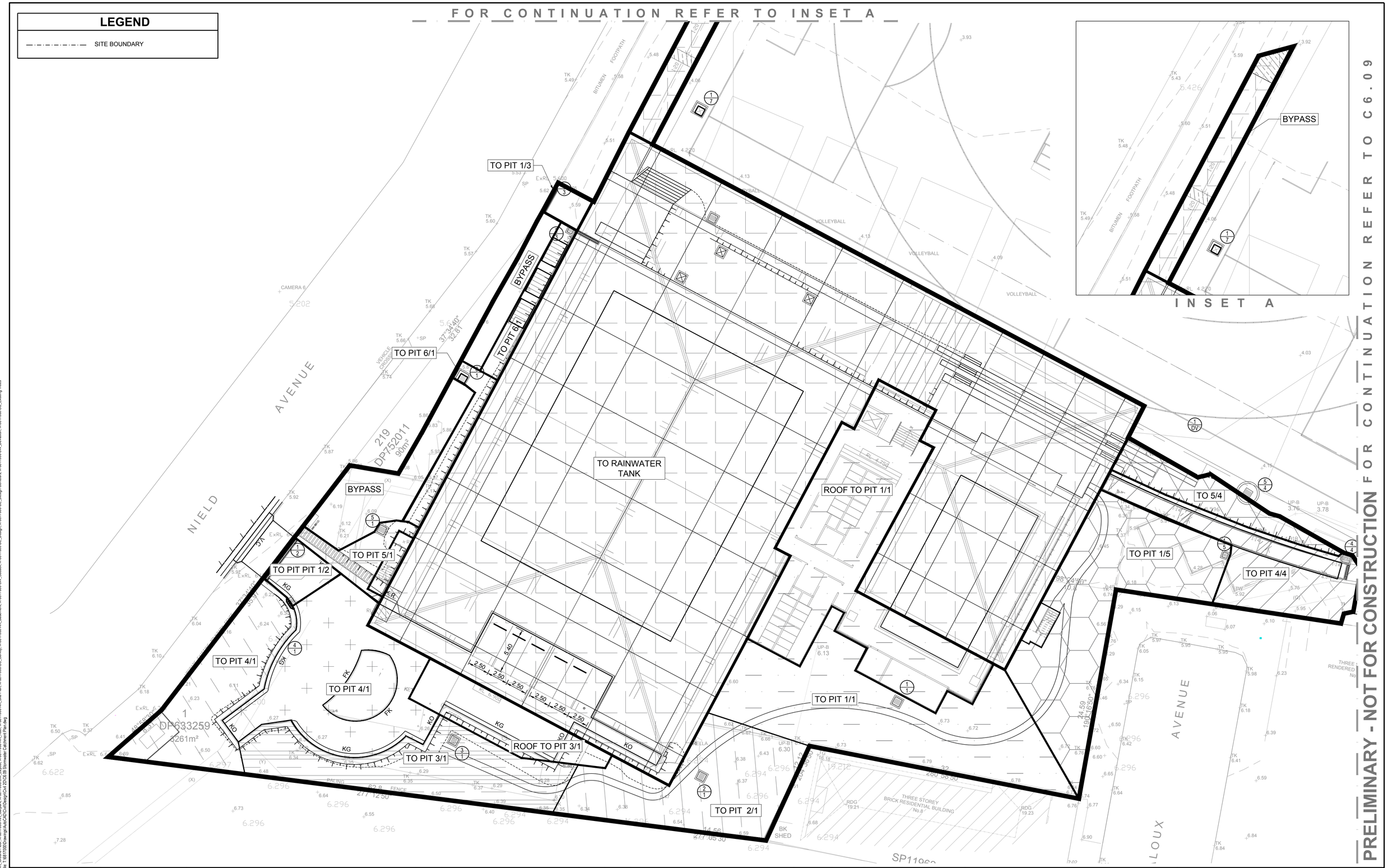

DO NOT SCALE FROM DRAWINGS, CHECK & VERIFY ALL DIMENSIONS & LEVELS BEFORE COMMENCEMENT OF ANY WORK.

THIS DRAWING IS NOT TO BE COPIED IN PART OR WHOLE WITHOUT WRITTEN PERMISSION FROM WARREN SMITH AND PARTNERS.

NORTH

2.5 0 2.5 5.0 7.5 10.0m
PLAN SCALE 1:200 A1 SHEET

REVISION	AMENDMENT	DATE	REVISION	AMENDMENT	DATE
1	90% SSDA ISSUE	21/08/20			
2	95% SSDA ISSUE	03/09/20			
3	SSDA ISSUE	09/09/20			

CLIENT SYDNEY GRAMMAR SCHOOL

PROJECT
SYDNEY GRAMMAR SCHOOL
WEIGALL SPORTS COMPLEX
& CARPARK

PREPARED BY
Warren Smith & Partners
Warren Smith & Partners Pty Ltd
Level 9, 233 Castlereagh Street, Sydney 2000 NSW Australia
02 9299 1312 wsp@warrensmith.com.au
www.warrensmith.com.au ABN 36 300 430 126
Consulting Engineers
Hydraulic Fire Civil Utilities Infrastructure
GCC ISO 9001 Certified
SERVING THE CONSTRUCTION INDUSTRY SINCE 1981.

TITLE
STORMWATER CATCHMENT PLAN - SHEET 1

SCALE	DRAWN	DESIGNED	CHECKED	APPROVED
AS SHOWN	M.T.	M.Cz.	L.S.	L.S.

JOB No.	DRAWING No.	ISSUE
6817000	C6.08	3

DATE	STATUS
SEPTEMBER 2020	SSDA

Xrefs: X-6817000-TB_A1H; X-6817000-SIU_Boundary; X-6817000-AR_Ground Floor; X-6817000-AR_Carpark; X-6817000-SW_Layout; X-6817000-AR_Roof; X-6817000-AR_Site Plan; X-6817000-SIU_Survey; X-6817000-SW_Basement; X-6817000-SW_Subsoil; X-6817000-DE_Design; X-6817000-DE_Design Contours; X-6817000-SW_Development
Plot Date: 10.09.2020@12:27:56 Login Name: NGupta Cad File: T:\6817000\Drawings\AutoCAD\Cad\Design\Civil 2D\C6.09 Stormwater Catchment Plan.dwg

LEGEND

—·—·—·—	SITE BOUNDARY

DO NOT SCALE FROM DRAWINGS, CHECK & VERIFY ALL DIMENSIONS & LEVELS BEFORE COMMENCEMENT OF ANY WORK.

THIS DRAWING IS NOT TO BE COPIED IN PART OR WHOLE WITHOUT WRITTEN PERMISSION FROM WARREN SMITH AND PARTNERS.

NORTH

2.5 0 2.5 5.0 7.5 10.0m
PLAN SCALE 1:200 A1 SHEET

REVISION	AMENDMENT	DATE	REVISION	AMENDMENT	DATE
1	90% SSDA ISSUE	21/08/20			
2	95% SSDA ISSUE	03/09/20			
3	SSDA ISSUE	09/09/20			

CLIENT SYDNEY GRAMMAR SCHOOL

PROJECT
SYDNEY GRAMMAR SCHOOL
WEIGALL SPORTS COMPLEX
& CARPARK

PREPARED BY
Warren Smith & Partners
Warren Smith & Partners Pty Ltd
Level 9, 233 Castlereagh Street, Sydney 2000 NSW Australia
02 9299 1312 wsp@warrensmith.com.au
www.warrensmith.com.au ABN 36 300 430 126
Consulting Engineers
Hydraulic Fire Civil Utilities Infrastructure
GCC ISO 9001 Certified
SERVING THE CONSTRUCTION INDUSTRY SINCE 1981.

TITLE
STORMWATER CATCHMENT PLAN - SHEET 2

SCALE	DRAWN	DESIGNED	CHECKED	APPROVED
AS SHOWN	M.T.	M.Cz.	L.S.	L.S.

JOB No.	DRAWING No.	ISSUE
6817000	C6.09	3

DATE	STATUS
SEPTEMBER 2020	SSDA

Xref's: K-6817000-TB, A1H, K-6817000-SU_Boundary, X-6817000-AR_Ground Floor, X-6817000-AR_Carpark, X-6817000-SW_Layout, X-6817000-AR_Roof, X-6817000-AR_Site Plan, X-6817000-SU_Survey, X-6817000-AR_Basement, X-6817000-SW_Subsoil, X-6817000-DE_Design, X-6817000-DE_Design Contours, X-6817000-SW_Detailed, X-6817000-SU_Existing Trees
Plot Date: 10.09.2020@14:54:15 Login Name: NGupta Cad File: T:\6817000\Drawings\AutoCAD\Civil\Design\Civil 2D\C6.09 Stormwater Catchment Plan.dwg

AEP STORM (%)	PRE DEVELOPMENT (L/s)	POST-DEVELOPMENT (L/s)
50	204	203
20	295	285
10	376	368
5	457	430
2	574	509
1	666	550

NOTES:

1. STORMWATER NETWORK FOR THE PROPOSED DEVELOPMENT HAS BEEN DESIGNED SUCH THAT THE POST DEVELOPMENT DISCHARGE FROM THE SITE SHALL NOT EXCEED PRE DEVELOPMENT DISCHARGE FOR ALL THE STORM EVENTS.

   REFER TO TABLES FOR DEVELOPMENT AREA DISCHARGE RESULTS.

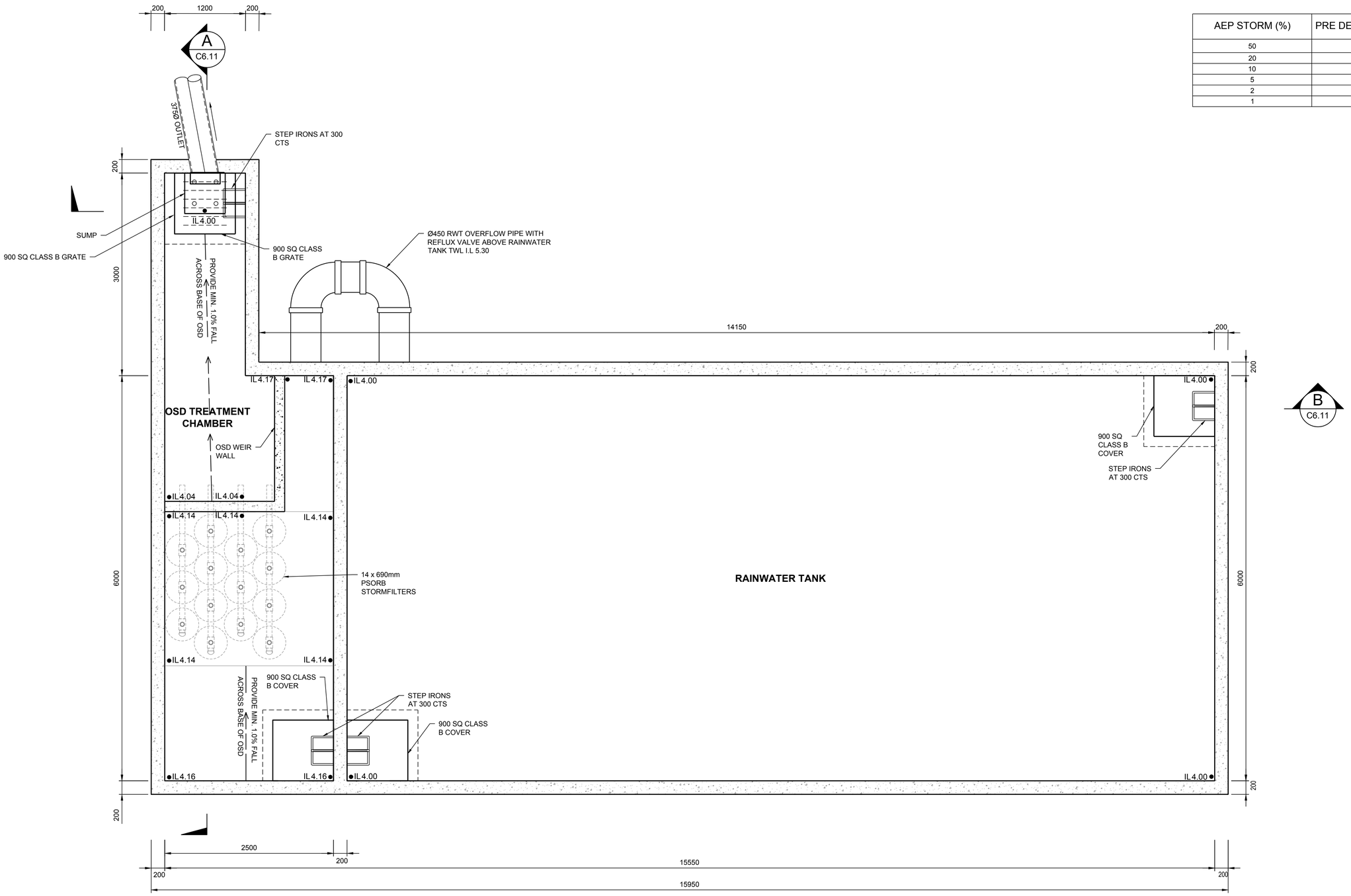

ON SITE DETENTION TANK AND RAINWATER TANK PLAN

EFFECTIVE VOLUME OSD = 22.32m³ RWT = 100m³

SCALE: 1:30

PRELIMINARY - NOT FOR CONSTRUCTION

DO NOT SCALE FROM DRAWINGS, CHECK & VERIFY ALL DIMENSIONS & LEVELS BEFORE COMMENCEMENT OF ANY WORK.

THIS DRAWING IS NOT TO BE COPIED IN PART OR WHOLE WITHOUT WRITTEN PERMISSION FROM WARREN SMITH AND PARTNERS.

REVISION	AMENDMENT	DATE	REVISION	AMENDMENT	DATE
1	95% SSDA ISSUE	03/09/20			
2	SSDA ISSUE	09/09/20			

CLIENT: SYDNEY GRAMMAR SCHOOL

PROJECT: SYDNEY GRAMMAR SCHOOL WEIGALL SPORTS COMPLEX & CARPARK

PREPARED BY
Warren Smith & Partners Pty Ltd
Level 9, 233 Castlereagh Street, Sydney 2000 NSW Australia
02 9299 1312 wsp@warrensmith.com.au
www.warrensmith.com.au ABN 36 300 430 126
Consulting Engineers
Hydraulic Fire Civil Utilities Infrastructure
SERVING THE CONSTRUCTION INDUSTRY SINCE 1981.

TITLE: **OSD PLAN**

SCALE	DRAWN	DESIGNED	CHECKED	APPROVED
AS SHOWN	M.T.	M.CZ.	L.S.	L.S.

JOB No.	DRAWING No.	ISSUE
6817000	C6.10	2

DATE	STATUS
SEPTEMBER 2020	SSDA

Xrefs: X-6817000-TB_A1H
Plot Date: 10/09/2020@14:31:26 Login Name: NGupta Cad File: T:\6817000\Drawings\AutoCAD\Civil\Design\Civil 2D\C6.10 OSD Plan.dwg

0 10 20 30 40 50 60 70 80 90 100 110 120 130 140 150

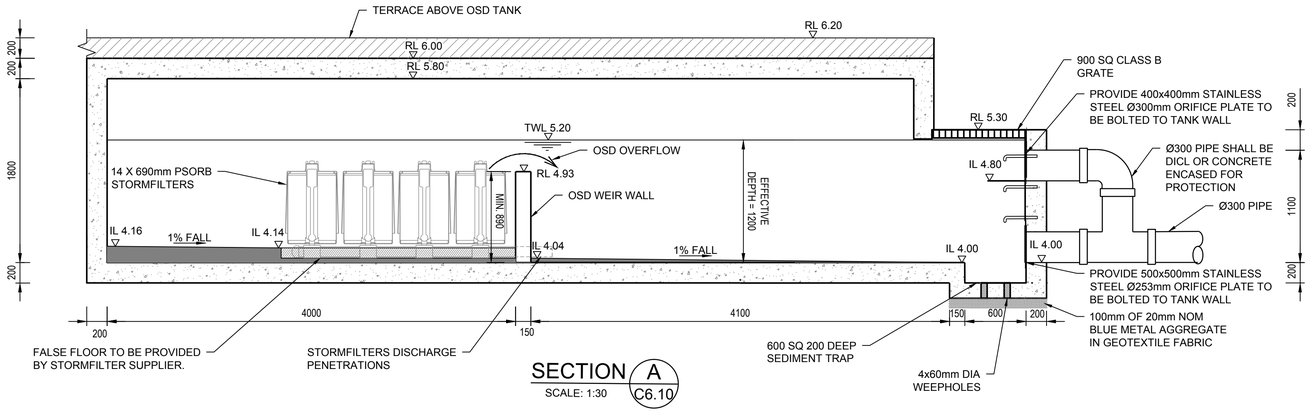

SECTION A C6.10
SCALE: 1:30

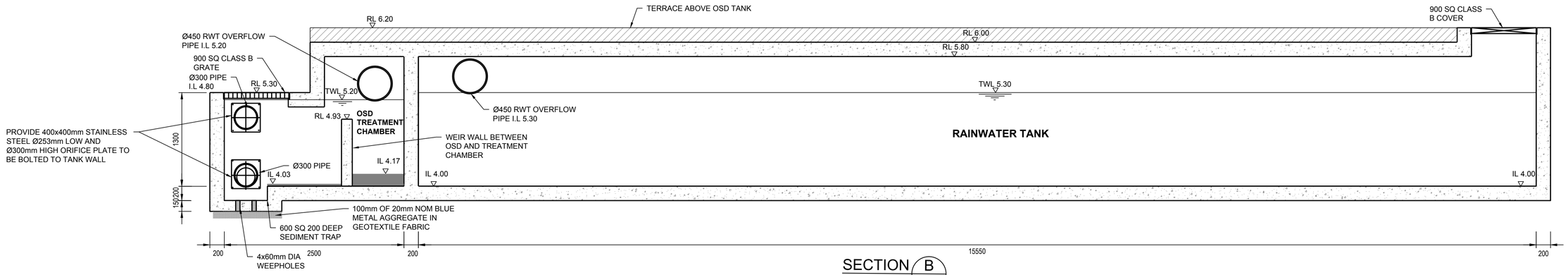

SECTION B C6.10
SCALE: 1:30

PRELIMINARY - NOT FOR CONSTRUCTION

DO NOT SCALE FROM DRAWINGS, CHECK & VERIFY ALL DIMENSIONS & LEVELS BEFORE COMMENCEMENT OF ANY WORK.

THIS DRAWING IS NOT TO BE COPIED IN PART OR WHOLE WITHOUT WRITTEN PERMISSION FROM WARREN SMITH AND PARTNERS.

REVISION	AMENDMENT	DATE	REVISION	AMENDMENT	DATE
1	95% SSDA ISSUE	03/09/20			
2	SSDA ISSUE	09/09/20			

CLIENT: SYDNEY GRAMMAR SCHOOL

PROJECT: SYDNEY GRAMMAR SCHOOL WEIGALL SPORTS COMPLEX & CARPARK

PREPARED BY
Warren Smith & Partners
Warren Smith & Partners Pty Ltd
Level 9, 233 Castlereagh Street, Sydney 2000 NSW Australia
02 9299 1312 wsp@warrensmith.com.au
www.warrensmith.com.au **ABN** 36 300 430 126
Consulting Engineers
Hydraulic Fire Civil Utilities Infrastructure
GCC ISO 9001 Certified
SERVING THE CONSTRUCTION INDUSTRY SINCE 1981.

TITLE: **OSD SECTIONS**

SCALE	DRAWN	DESIGNED	CHECKED	APPROVED
AS SHOWN	M.T.	M.CZ.	L.S.	L.S.

JOB No.	DRAWING No.	ISSUE
6817000	C6.11	2

DATE	STATUS
SEPTEMBER 2020	SSDA

Xrefs: X-6817000-TB_A1H
Plot Date: 10.09.2020@14:33:14 Login Name: NGupta Cad File: T:\6817000\Drawings\AutoCAD\Civil\Design\Civil 2D\C6.10 OSD Plan.dwg

0 10 20 30 40 50 60 70 80 90 100 110 120 130 140 150

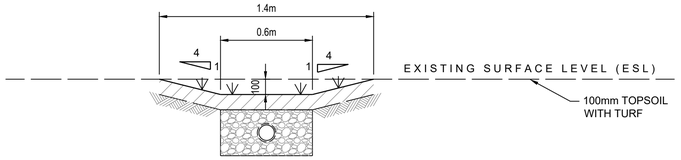

PROPOSED GRASS LINED SWALE

SCALE 1:20

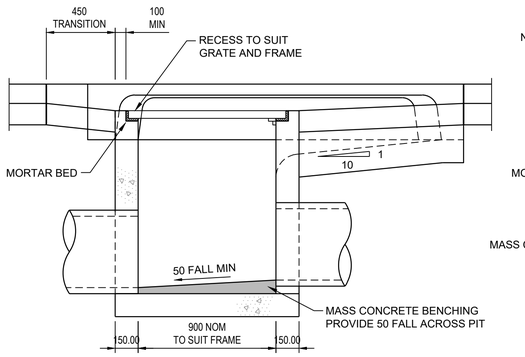

DETAIL 1/-

SCALE 1:20

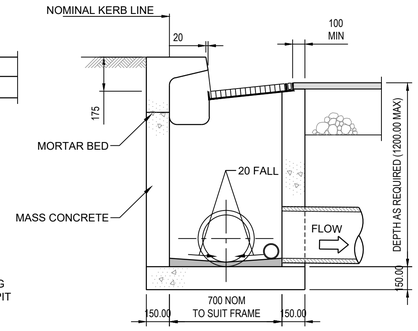

DETAIL 2/-

SCALE 1:20

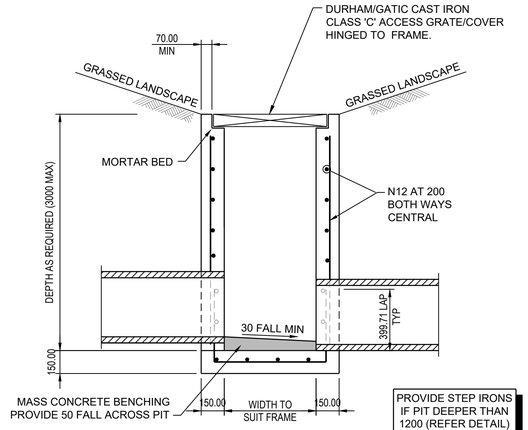

PROVIDE STEP IRONS IF PIT DEEPER THAN 1200 (REFER DETAIL)

DETAIL D1/2 -

SCALE 1:20

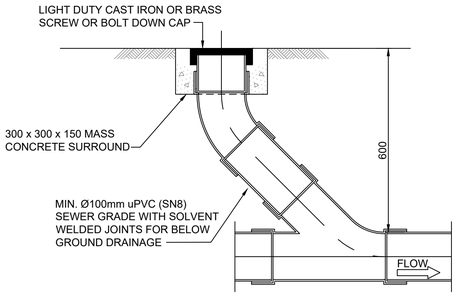

CLEAROUT (CO)

SCALE 1:10

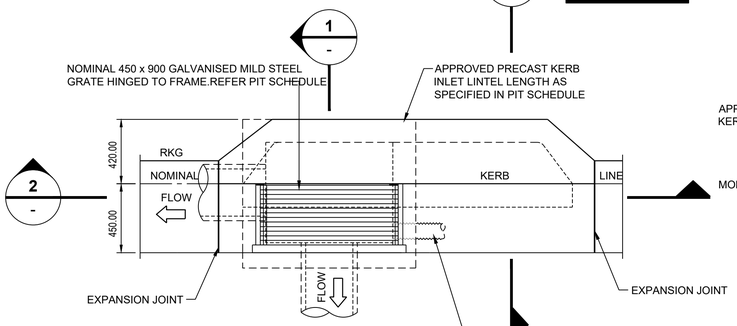

PLAN

SCALE 1:20

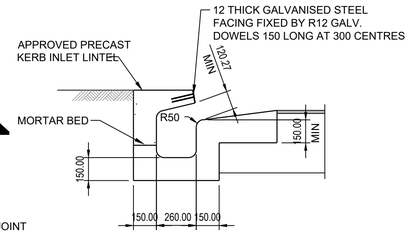

DETAIL 3/-

SCALE 1:20

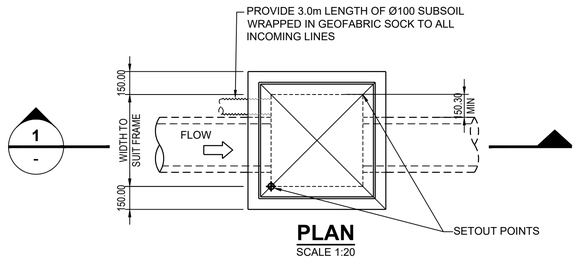

PLAN

SCALE 1:20

600 - 900SQ SURFACE INLET PITS

GRATED KERB INLET PIT

(PIPE SIZES ≤ Ø375 STRAIGHT ENTRY)

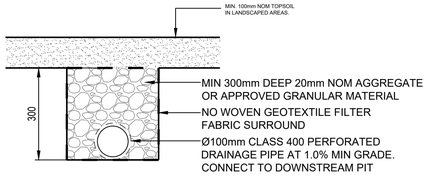

SUBSOIL IN LANDSCAPING AREA

SCALE 1:10

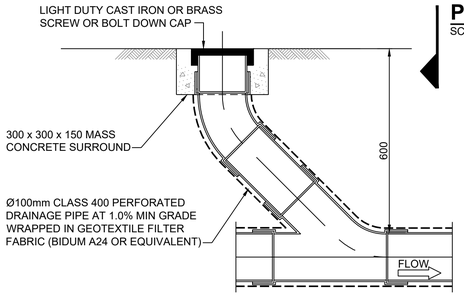

INTERMEDIATE RISER (IR)

SCALE 1:10

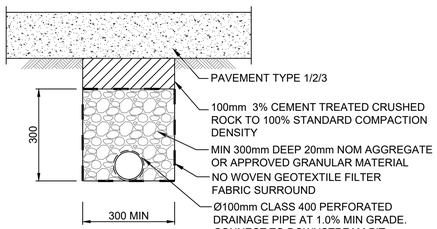

SUBSOIL DRAINAGE UNDER PAVEMENT

SCALE 1:10

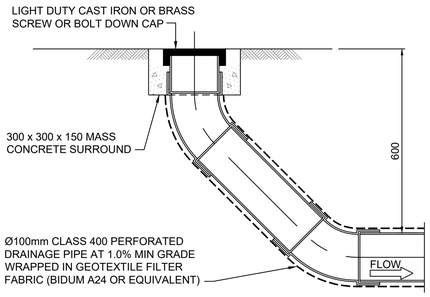

HIGH END RISER (HER)

SCALE 1:10

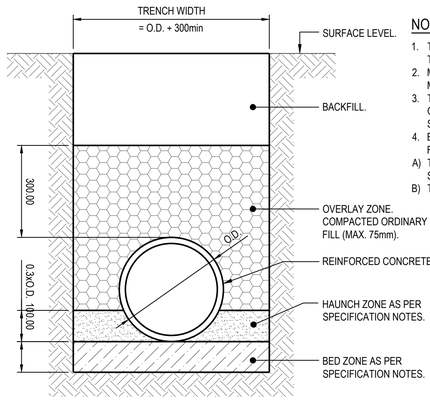

GENERAL AREAS

TYPICAL PIPE TRENCH

NOT TO SCALE

NOTES:

1. TRENCH WIDTH MAY NEED TO BE INCREASED SUBJECT TO ACHIEVING ADEQUATE COMPACTION.
2. MINIMUM PIPE COVER NOT UNDER ROADS = 450mm UNO. MINIMUM PIPE COVER UNDER ROADS = 600mm UNO.
3. THE CONTRACTOR SHALL ENSURE THAT THE SHORING OF TRENCHES IS INSTALLED AS REQUIRED BY STATUTORY REQUIREMENTS.
4. ENSURE BACKFILLING COMPACTION MEETS THE FOLLOWING STANDARDS;

A) TRENCHES UNDER PAVED AREAS & BUILDINGS - 100% SMDD.
B) TRENCHES NOT UNDER PAVEMENTS - 90% SMDD.

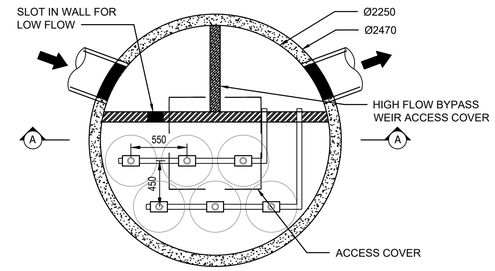

PLAN

SCALE 1:30

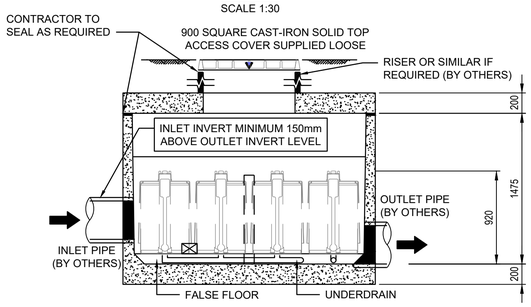

SECTION A-A

SCALE 1:30

PRELIMINARY - NOT FOR CONSTRUCTION

DO NOT SCALE FROM DRAWINGS, CHECK & VERIFY ALL DIMENSIONS & LEVELS BEFORE COMMENCEMENT OF ANY WORK.

THIS DRAWING IS NOT TO BE COPIED IN PART OR WHOLE WITHOUT WRITTEN PERMISSION FROM WARREN SMITH AND PARTNERS.

100 0 100 200 300 400 500mm
PLAN SCALE 1:10 A1 SHEET
200 0 200 400 600 800 1000mm
PLAN SCALE 1:20 A1 SHEET

REVISION	AMENDMENT	DATE	REVISION	AMENDMENT	DATE
1	90% SSDA ISSUE	21/08/20			
2	95% SSDA ISSUE	03/09/20			
3	SSDA ISSUE	09/09/20			

CLIENT SYDNEY GRAMMAR SCHOOL

PROJECT
SYDNEY GRAMMAR SCHOOL
WEIGALL SPORTS COMPLEX
& CARPARK

PREPARED BY
Warren Smith & Partners
Warren Smith & Partners Pty Ltd
Level 9, 233 Castlereagh Street, Sydney 2000 NSW Australia
02 9299 1312 wsp@warrensmith.com.au
www.warrensmith.com.au ABN 36 300 430 126
Consulting Engineers
Hydraulic Fire Civil Utilities Infrastructure
GCC ISO 9001 Certified
SERVING THE CONSTRUCTION INDUSTRY SINCE 1981.

TITLE
STORMWATER DRAINAGE DETAILS

SCALE	DRAWN	DESIGNED	CHECKED	APPROVED
AS SHOWN	M.T.	M.Cz.	L.S.	L.S.

JOB No.	DRAWING No.	ISSUE
6817000	C6.12	3

DATE	STATUS
SEPTEMBER 2020	SSDA

Xrefs: X-6817000-TB_A1H
Plot Date: 09.09.2020@17:28:33 Login Name: mstaz Cad File: T:\6817000\Drawings\AutoCAD\Civil\Design\Civil 2\C6.12 Stormwater Drainage Details.dwg

0 10 20 30 40 50 60 70 80 90 100 110 120 130 140 150

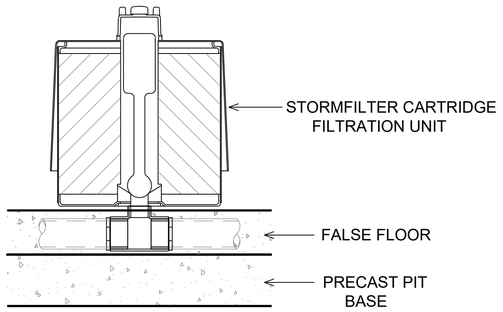

STORMFILTER CARTRIDGE DETAIL

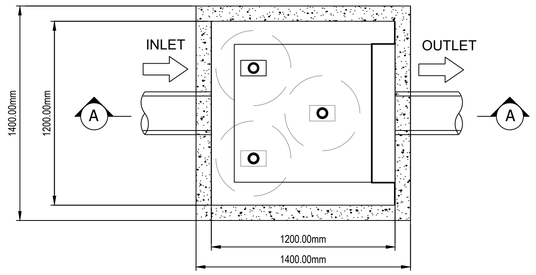

PLAN LAYOUT

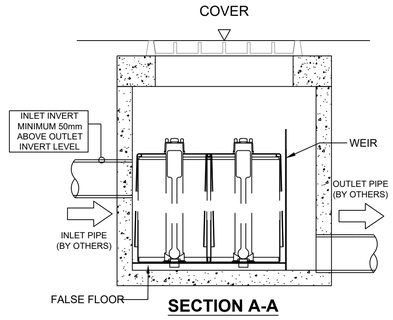

SECTION A-A

TYPICAL DETAIL OF WATER QUALITY TREATMENT PIT WITH 690 PSORB STORMFILTER

SCALE 1:20

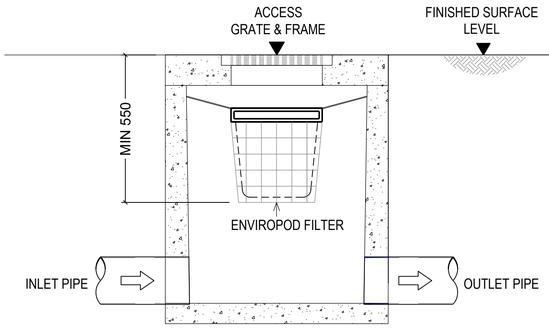

STANDARD OCEANGUARD CONFIGURATION SECTION

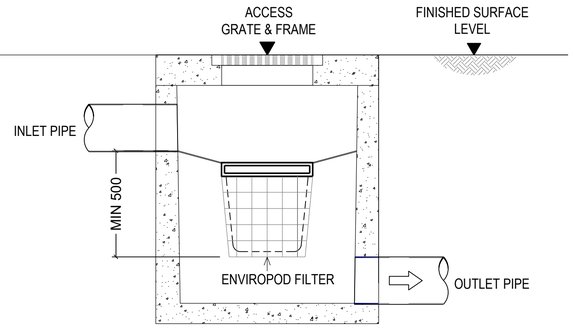

DROP PIPE OCEANGUARD CONFIGURATION SECTION

PRELIMINARY - NOT FOR CONSTRUCTION

DO NOT SCALE FROM DRAWINGS, CHECK & VERIFY ALL DIMENSIONS & LEVELS BEFORE COMMENCEMENT OF ANY WORK.

THIS DRAWING IS NOT TO BE COPIED IN PART OR WHOLE WITHOUT WRITTEN PERMISSION FROM WARREN SMITH AND PARTNERS.

REVISION	AMENDMENT	DATE	REVISION	AMENDMENT	DATE
1	90% SSDA ISSUE	21/08/20			
2	95% SSDA ISSUE	03/09/20			
3	SSDA ISSUE	09/09/20			

CLIENT: SYDNEY GRAMMAR SCHOOL

PROJECT: SYDNEY GRAMMAR SCHOOL WEIGALL SPORTS COMPLEX & CARPARK

PREPARED BY
Warren Smith & Partners
Warren Smith & Partners Pty Ltd
Level 9, 233 Castlereagh Street, Sydney 2000 NSW Australia
02 9299 1312 wsp@warrensmith.com.au
www.warrensmith.com.au ABN 36 300 430 126
Consulting Engineers
Hydraulic Fire Civil Utilities Infrastructure
ISO 9001 Certified
SERVING THE CONSTRUCTION INDUSTRY SINCE 1981.

TITLE: **OCEAN PROTECT TREATMENT DEVICE TYPICAL DETAILS**

SCALE	DRAWN	DESIGNED	CHECKED	APPROVED
AS SHOWN	M.T.	M.CZ.	L.S.	L.S.

JOB No.	DRAWING No.	ISSUE
6817000	C6.13	3

DATE	STATUS
AUGUST 2020	SSDA

Xrefs: X-6817000-TB_A1H
Plot Date: 09.09.2020@17:26:10 Login Name: molaz Cad File: T:\6817000\Drawings\AutoCAD\Civil\Design\Civil 2\C6.13 Ocean Protect Treatment Device Typical Details.dwg

0 10 20 30 40 50 60 70 80 90 100 110 120 130 140 150

NOTES:

1. ALL PLAN SHEETS SHOWN IN C1.04 KEY PLAN SHALL BE TO 1:200 SCALE.

2. ALL PLAN SHEETS SHOWN IN C6.01 KEY PLAN SHALL BE TO 1:100 SCALE.

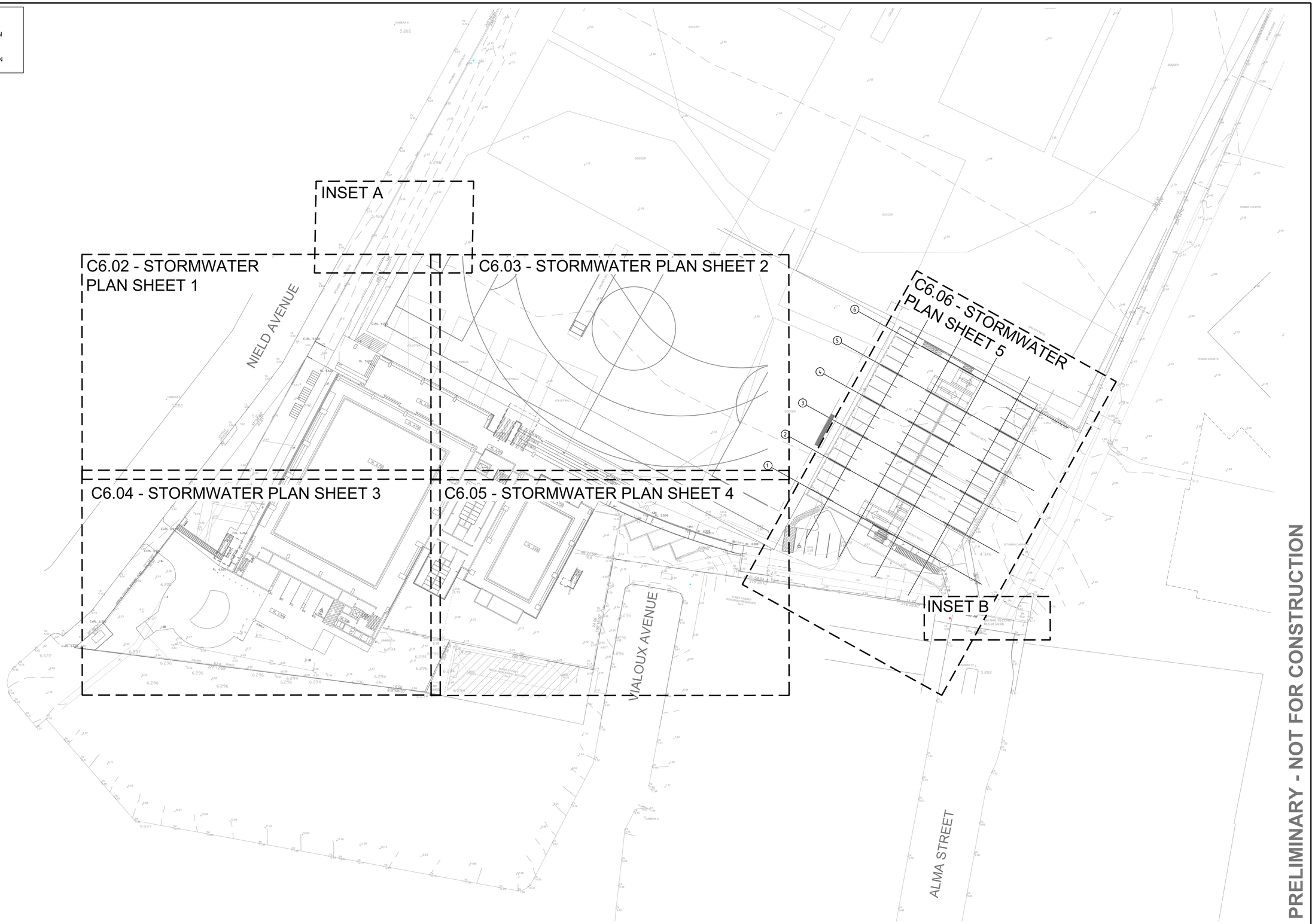

PRELIMINARY - NOT FOR CONSTRUCTION

DO NOT SCALE FROM DRAWINGS, CHECK & VERIFY ALL DIMENSIONS & LEVELS BEFORE COMMENCEMENT OF ANY WORK.

THIS DRAWING IS NOT TO BE COPIED IN PART OR WHOLE WITHOUT WRITTEN PERMISSION FROM WARREN SMITH AND PARTNERS.

NORTH

5 0 5 10 15 20m
PLAN SCALE 1:400 A1 SHEET

REVISION	AMENDMENT	DATE	REVISION	AMENDMENT	DATE
1	90% SSDA ISSUE	21/08/20			
2	95% SSDA ISSUE	03/09/20			
3	SSDA ISSUE	09/09/20			

CLIENT SYDNEY GRAMMAR SCHOOL

PROJECT
SYDNEY GRAMMAR SCHOOL
WEIGALL SPORTS COMPLEX
& CARPARK

PREPARED BY
Warren Smith & Partners Pty Ltd
Level 9, 233 Castlereagh Street, Sydney 2000 NSW Australia
02 9299 1312 wsp@warrensmith.com.au
www.warrensmith.com.au ABN 36 300 430 126
Consulting Engineers
Hydraulic Fire Civil Utilities Infrastructure
SERVING THE CONSTRUCTION INDUSTRY SINCE 1981.

TITLE
STORMWATER KEY PLAN

SCALE	DRAWN	DESIGNED	CHECKED	APPROVED
AS SHOWN	M.T.	M.Cz.	L.S.	L.S.

JOB No.	DRAWING No.	ISSUE
6817000	C6.01	3

DATE	STATUS
SEPTEMBER 2020	SSDA

Xrefs: X-6817000-TB, A1H, X-6817000-SU, Existing Utilities, X-6817000-SU, Boundary, X-6817000-AR, Site Plan, X-6817000-SU, Survey, X-6817000-AR, Ground Floor, X-6817000-AR, Carpark
Plot Date: 09.09.2020@17:08:39 Login Name: mcdcz Cad File: T:\6817000\Drawings\AutoCAD\Civil\Design\Civil 2D\C6.01 Stormwater Key Plan.dwg

LEGEND

	INDICATIVE OVERLAND FLOW ROUTE
Ø450	PIPE DIAMETER AND DIRECTION OF FLOW
SW	STORMWATER PIPE (SIZE <Ø1050)
esw	EXISTING STORMWATER PIPE
es	EXISTING SEWER LINE
Ø225	PIPE DIAMETER AND DIRECTION OF FLOW
S	SEWER DEVIATION
SSD	SUBSOIL DRAINAGE LINE
SSD	SUBSOIL HIGH END RISER
SSD	SUBSOIL INTERMEDIATE RISER
	SUBSOIL DRAINAGE LINE UNDER PAVEMENT
	STORMWATER DEVIATION
	EXISTING EASEMENT
	900 x 900 JUNCTION PIT
	900 x 900 GRATED INLET PIT
	PIT STRUCTURE NUMBER / STORMWATER LINE NUMBER
GD	GRATED TRENCH DRAIN

NOTE:

1. OCEAN PROTECT ENVIROPOD FILTERS ARE TO BE INSTALLED IN PITS: 1/1, 2/1, 3/1, 4/1, 5/1, 6/1, 2/3, 2/4, 3/4, 4/4, 5/4, 1/5, 1/6, 2/6, 3/6. OIL SOAK BY MYCELX TO BE INSTALLED WITHIN THE OCEAN GUARD IN PIT 3/6.
2. REFER TO ARBORIST'S REPORT FOR ALL WORKS WITHIN THE TREE PROTECTION ZONE OF TREES TO BE RETAINED.

INSET A

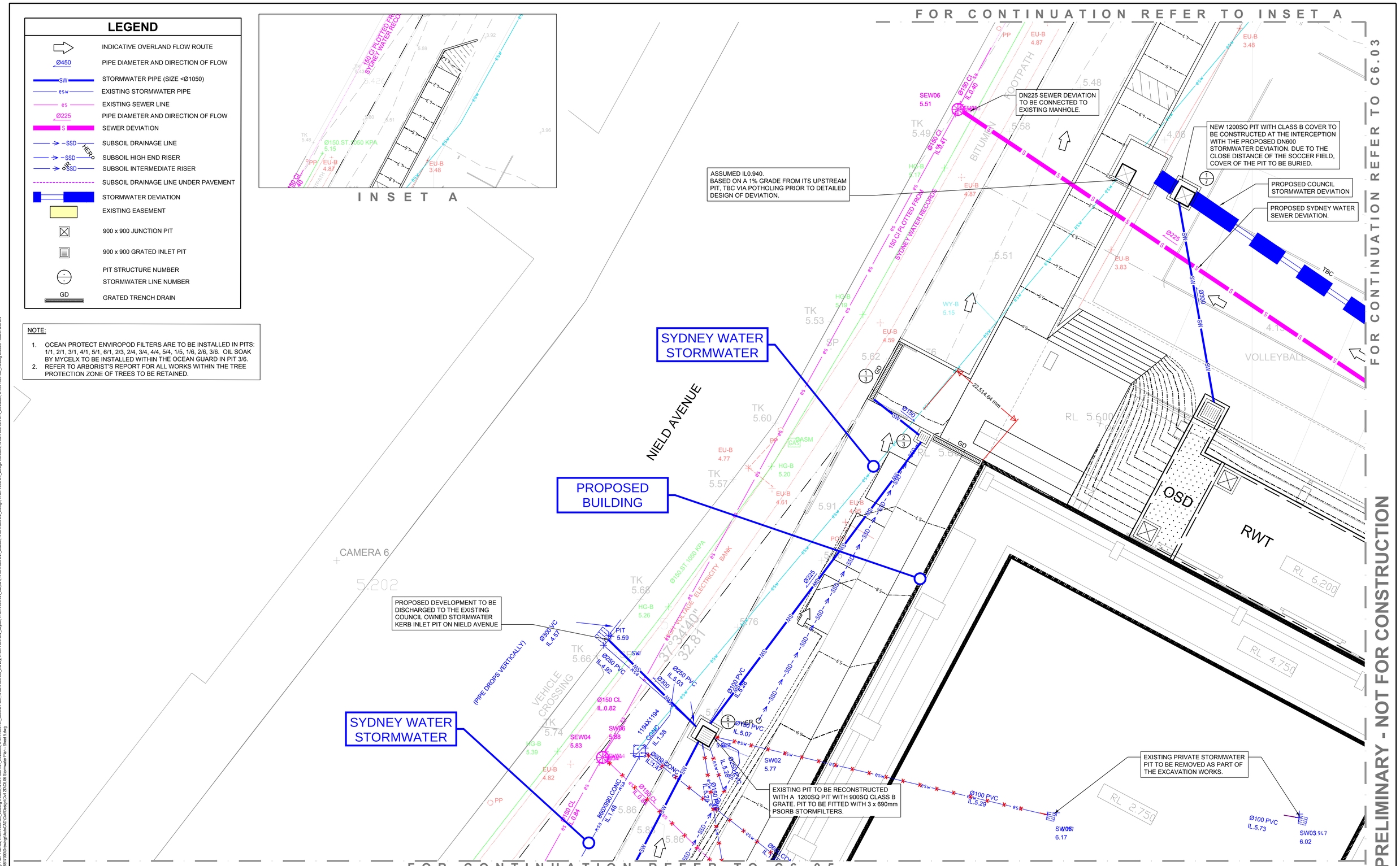

DO NOT SCALE FROM DRAWINGS, CHECK & VERIFY ALL DIMENSIONS & LEVELS BEFORE COMMENCEMENT OF ANY WORK.

THIS DRAWING IS NOT TO BE COPIED IN PART OR WHOLE WITHOUT WRITTEN PERMISSION FROM WARREN SMITH AND PARTNERS.

NORTH

1.0 0 1.0 2.0 3.0 4.0 5.0m
PLAN SCALE 1:100 A1 SHEET

REVISION	AMENDMENT	DATE	REVISION	AMENDMENT	DATE
1	90% SSDA ISSUE	21/08/20			
2	95% SSDA ISSUE	03/09/20			
3	SSDA ISSUE	09/09/20			

CLIENT SYDNEY GRAMMAR SCHOOL

PROJECT
SYDNEY GRAMMAR SCHOOL
WEIGALL SPORTS COMPLEX
& CARPARK

PREPARED BY
Warren Smith & Partners
Warren Smith & Partners Pty Ltd
Level 9, 233 Castlereagh Street, Sydney 2000 NSW Australia
02 9299 1312 wsp@warrensmith.com.au
www.warrensmith.com.au ABN 36 300 430 126
Consulting Engineers
Hydraulic Fire Civil Utilities Infrastructure
SERVING THE CONSTRUCTION INDUSTRY SINCE 1981.

TITLE
STORMWATER PLAN - SHEET 1

SCALE	DRAWN	DESIGNED	CHECKED	APPROVED
AS SHOWN	M.T.	M.Cz.	L.S.	L.S.

JOB No.	DRAWING No.	ISSUE
6817000	C6.02	3

DATE	STATUS
JANUARY 2019	SSDA

Xref: X:\6817000\TB_A1H_X:\6817000\SU_Boundary X:\6817000\SU_Existing Utilities X:\6817000\SU_Survey X:\6817000\SW_Deviation X:\6817000\AR_Ground Floor X:\6817000\AR_Carpark X:\6817000\SW_Layout X:\6817000\SW_Subsoil X:\6817000\DE_Design_X:\6817000\DE_Design Contours_X:\6817000\SEWER_Deviation_X:\6817000\SU_Existing Utilities - Sewer and SW
Plot Date: 10:09:2020@16:52:26 Login Name: NGupta Cad File: T:\6817000\Drawings\AutoCAD\Civil\Design\Civil 2D\C6.M Stormwater Plan - Sheet 5.dwg

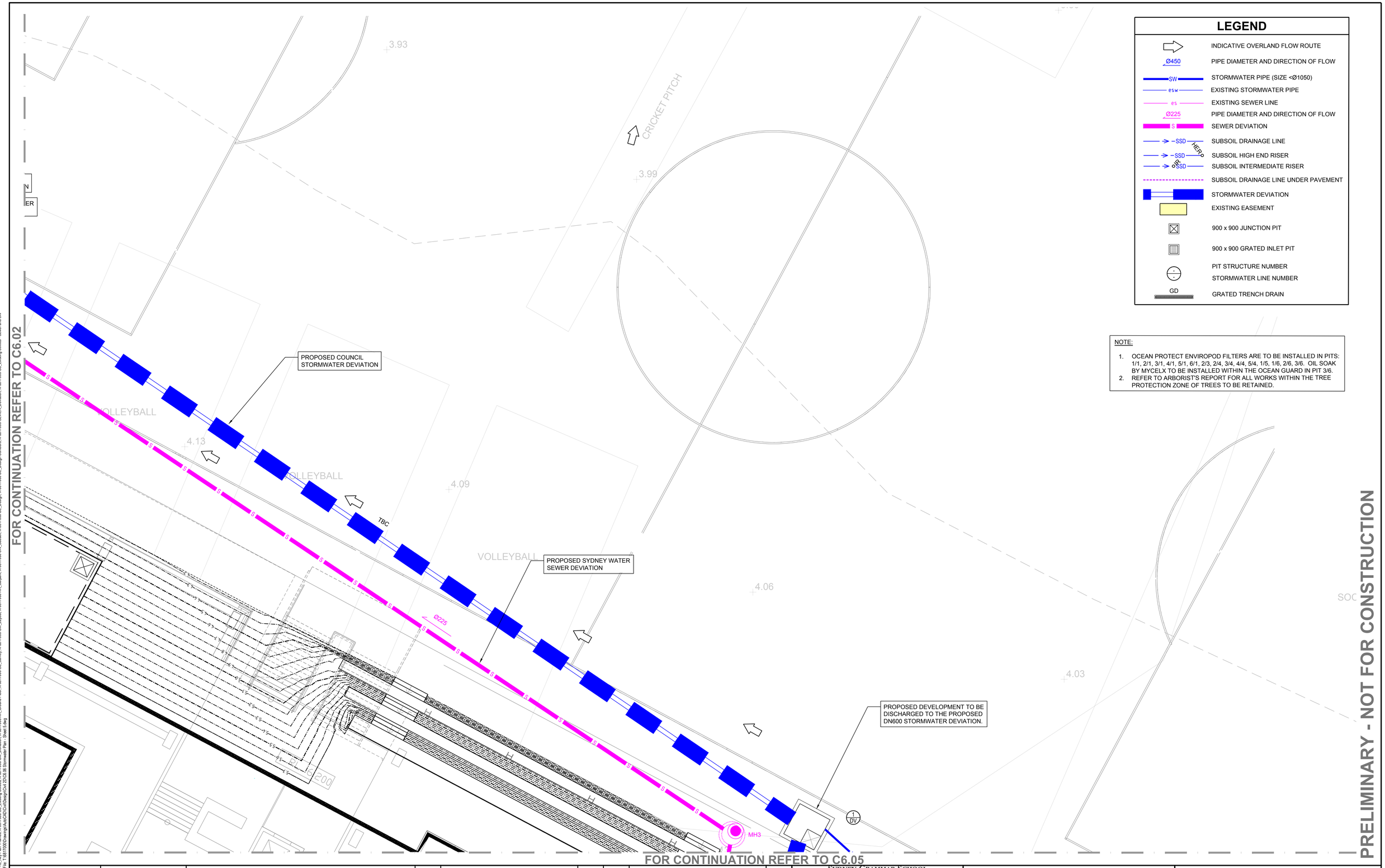

NOTE:

1. OCEAN PROTECT ENVIROPOD FILTERS ARE TO BE INSTALLED IN PITS: 1/1, 2/1, 3/1, 4/1, 5/1, 6/1, 2/3, 2/4, 3/4, 4/4, 5/4, 1/5, 1/6, 2/6, 3/6. OIL SOAK BY MYCELX TO BE INSTALLED WITHIN THE OCEAN GUARD IN PIT 3/6.
2. REFER TO ARBORIST'S REPORT FOR ALL WORKS WITHIN THE TREE PROTECTION ZONE OF TREES TO BE RETAINED.

DO NOT SCALE FROM DRAWINGS, CHECK & VERIFY ALL DIMENSIONS & LEVELS BEFORE COMMENCEMENT OF ANY WORK.

THIS DRAWING IS NOT TO BE COPIED IN PART OR WHOLE WITHOUT WRITTEN PERMISSION FROM WARREN SMITH AND PARTNERS.

NORTH

1.0 0 1.0 2.0 3.0 4.0 5.0m
PLAN SCALE 1:100 A1 SHEET

REVISION	AMENDMENT	DATE	REVISION	AMENDMENT	DATE
1	90% SSDA ISSUE	21/08/20			
2	95% SSDA ISSUE	03/09/20			
3	SSDA ISSUE	09/09/20			

CLIENT SYDNEY GRAMMAR SCHOOL

PROJECT
SYDNEY GRAMMAR SCHOOL
WEIGALL SPORTS COMPLEX
& CARPARK

PREPARED BY

Warren Smith & Partners
Warren Smith & Partners Pty Ltd
Level 9, 233 Castlereagh Street, Sydney 2000 NSW Australia
02 9299 1312 wsp@warrensmith.com.au
www.warrensmith.com.au ABN 36 300 430 126
Consulting Engineers
Hydraulic Fire Civil Utilities Infrastructure
GCC ISO 9001 Certified
SERVING THE CONSTRUCTION INDUSTRY SINCE 1981.

TITLE
STORMWATER PLAN - SHEET 2

SCALE	DRAWN	DESIGNED	CHECKED	APPROVED
AS SHOWN	M.T.	M.Cz.	L.S.	L.S.

JOB No.	DRAWING No.	ISSUE
6817000	C6.03	3

DATE	STATUS
JANUARY 2019	SSDA

Xrefs: X-6817000-TB, A1H, X-6817000-SU, Boundary ; X-6817000-SU, Existing Utilities ; X-6817000-SW, Deviation ; X-6817000-AR, Ground Floor ; X-6817000-SU, Survey ; X-6817000-SW, Layout ; X-6817000-AR, Carpark ; X-6817000-SW, Subsoil ; X-6817000-DE, Design ; X-6817000-DE, Design Contours ; X-6817000-SEWER, Deviation ; X-6817000-SU, Existing Utilities - Sewer and SW
Plot Date: 10.09.2020@16:55:37 Login Name: NGupta Cad File: T:\6817000\Drawings\AutoCAD\CAd\Design\Civil 25\C6.06 Stormwater Plan - Sheet 1.dwg

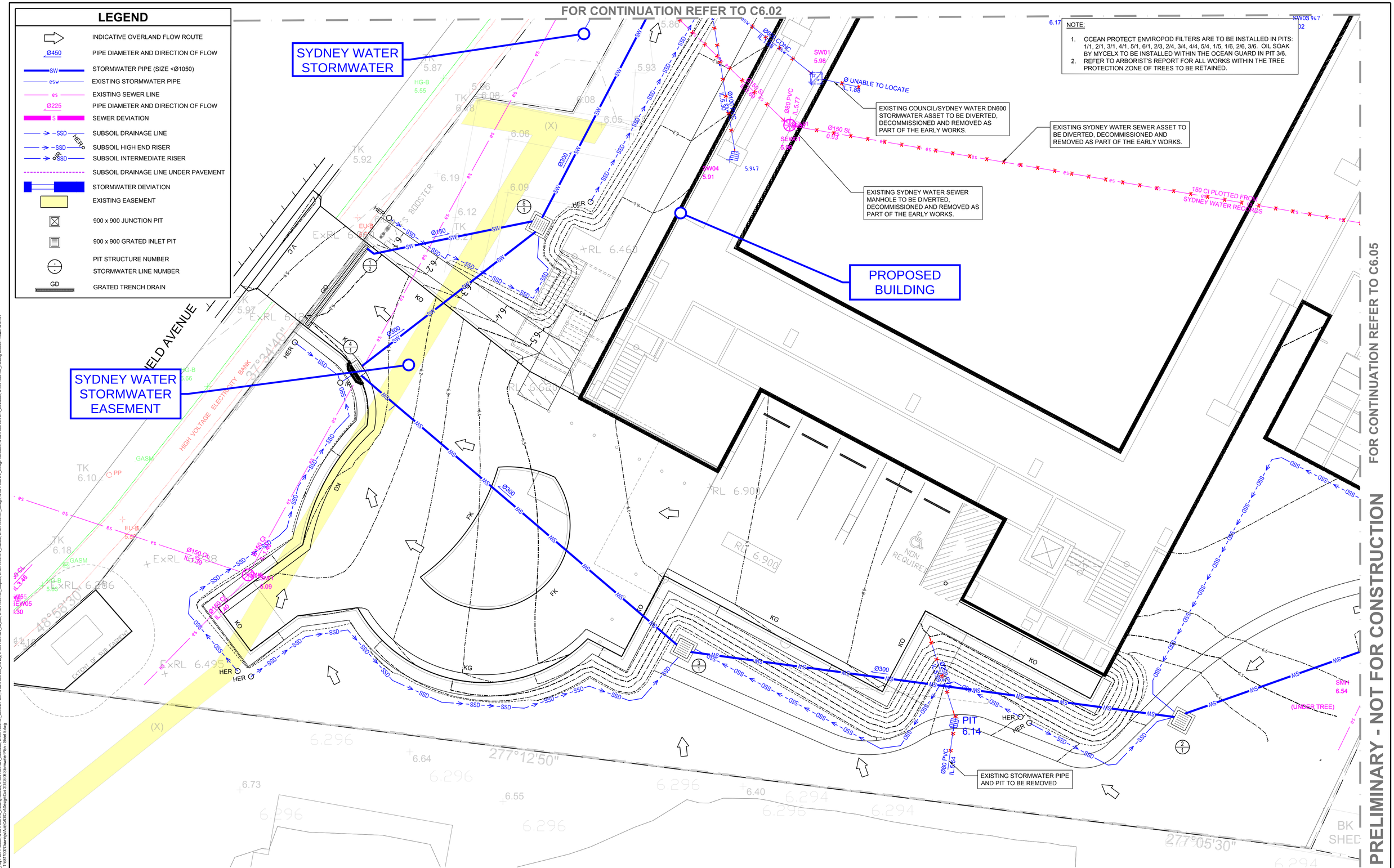

DO NOT SCALE FROM DRAWINGS, CHECK & VERIFY ALL DIMENSIONS & LEVELS BEFORE COMMENCEMENT OF ANY WORK.

THIS DRAWING IS NOT TO BE COPIED IN PART OR WHOLE WITHOUT WRITTEN PERMISSION FROM WARREN SMITH AND PARTNERS.

NORTH

1.0 0 1.0 2.0 3.0 4.0 5.0m
PLAN SCALE 1:100 A1 SHEET

REVISION	AMENDMENT	DATE	REVISION	AMENDMENT	DATE
1	90% SSDA ISSUE	21/08/20			
2	95% SSDA ISSUE	03/09/20			
3	SSDA ISSUE	09/09/20			

CLIENT SYDNEY GRAMMAR SCHOOL

PROJECT
SYDNEY GRAMMAR SCHOOL WEIGALL SPORTS COMPLEX & CARPARK

PREPARED BY
Warren Smith & Partners
Warren Smith & Partners Pty Ltd
Level 9, 233 Castlereagh Street, Sydney 2000 NSW Australia
02 9299 1312 wsp@warrensmith.com.au
www.warrensmith.com.au ABN 36 300 430 126
Consulting Engineers
Hydraulic Fire Civil Utilities Infrastructure
GCC ISO 9001 Certified
SERVING THE CONSTRUCTION INDUSTRY SINCE 1981.

TITLE
STORMWATER PLAN - SHEET 3

SCALE	DRAWN	DESIGNED	CHECKED	APPROVED
AS SHOWN	M.T.	M.Cz.	L.S.	L.S.

JOB No.	DRAWING No.	ISSUE
6817000	C6.04	3

DATE	STATUS
JANUARY 2019	SSDA

Xrefs: X:6817000-TB_A1H, X:6817000-SU_Boundary, X:6817000-TB_Key Plan Frames, X:6817000-SU_Existing Utilities, X:6817000-SW_Deviation, X:6817000-AR_Ground Floor, X:6817000-SU_Survey, X:6817000-SW_Layout, X:6817000-AR_Carpark, X:6817000-SW_Subsoil, X:6817000-DE_Design, X:6817000-DE_Design Contours, X:6817000-SEWER_Deviation, X:6817000-SU_Existing Utilities - Sewer and SW
Plot Date: 10:09:2020@15:29:39 Login Name: NGupta Cad File: T:\6817000\Drawings\AutoCAD\Civil\Design\Civil 2D\C6.06 Stormwater Plan - Sheet 5.dwg

FOR CONTINUATION REFER TO C6.03

FOR CONTINUATION REFER TO C6.04

FOR CONTINUATION REFER TO C6.06

PRELIMINARY - NOT FOR CONSTRUCTION

NOTE:

1. OCEAN PROTECT ENVIROPOD FILTERS ARE TO BE INSTALLED IN PITS: 1/1, 2/1, 3/1, 4/1, 5/1, 6/1, 2/3, 2/4, 3/4, 4/4, 5/4, 1/5, 1/6, 2/6, 3/6. OIL SOAK BY MYCELX TO BE INSTALLED WITHIN THE OCEAN GUARD IN PIT 3/6.
2. REFER TO ARBORIST'S REPORT FOR ALL WORKS WITHIN THE TREE PROTECTION ZONE OF TREES TO BE RETAINED.

PROPOSED 2.25m DIAMATER MANHOLE WITH CLASS B 900SQ GRATE TO BE FITTED WITH 6 x 690mm PSORB STORMFILTERS

PROPOSED COUNCIL STORMWATER DEVIATION

DN600 STORMWATER TO BE DEVIATED FROM EXISTING PIT

DN225 SEWER TO BE DEVIATED FROM THIS LOCATION

PROPOSED SYDNEY WATER SEWER DEVIATION

SEWER PIT UNDERNEATH TENNIS COURT

EXISTING SEWER PIPE TO BE REMOVED

SEWER PIPE PLOTTED FROM SYDNEY WATER RECORDS

VALOUX AVENUE

THREE STOREY BRICK RESIDENTIAL BUILDING No.8

THREE STOREY RENDERED RESIDENCE

LEGEND

- INDICATIVE OVERLAND FLOW ROUTE
- Ø450 — PIPE DIAMETER AND DIRECTION OF FLOW
- SW — STORMWATER PIPE (SIZE <Ø1050)
- esw — EXISTING STORMWATER PIPE
- es — EXISTING SEWER LINE
- Ø225 — PIPE DIAMETER AND DIRECTION OF FLOW
- S — SEWER DEVIATION
- SSD — SUBSOIL DRAINAGE LINE
- SSD — SUBSOIL HIGH END RISER
- SSD — SUBSOIL INTERMEDIATE RISER
- SUBSOIL DRAINAGE LINE UNDER PAVEMENT
- STORMWATER DEVIATION
- EXISTING EASEMENT
- 900 x 900 JUNCTION PIT
- 900 x 900 GRATED INLET PIT
- PIT STRUCTURE NUMBER
- STORMWATER LINE NUMBER
- GD — GRATED TRENCH DRAIN

DO NOT SCALE FROM DRAWINGS, CHECK & VERIFY ALL DIMENSIONS & LEVELS BEFORE COMMENCEMENT OF ANY WORK.

THIS DRAWING IS NOT TO BE COPIED IN PART OR WHOLE WITHOUT WRITTEN PERMISSION FROM WARREN SMITH AND PARTNERS.

NORTH

1.0 0 1.0 2.0 3.0 4.0 5.0m
PLAN SCALE 1:100 A1 SHEET

REVISION	AMENDMENT	DATE	REVISION	AMENDMENT	DATE
1	90% SSDA ISSUE	21/08/20			
2	95% SSDA ISSUE	03/09/20			
3	SSDA ISSUE	09/09/20			

CLIENT SYDNEY GRAMMAR SCHOOL

PROJECT
SYDNEY GRAMMAR SCHOOL
WEIGALL SPORTS COMPLEX
& CARPARK

PREPARED BY
Warren Smith & Partners Pty Ltd
Level 9, 233 Castlereagh Street, Sydney 2000 NSW Australia
02 9299 1312 wsp@warrensmith.com.au
www.warrensmith.com.au ABN 36 300 430 126
Consulting Engineers
Hydraulic Fire Civil Utilities Infrastructure
SERVING THE CONSTRUCTION INDUSTRY SINCE 1981.

TITLE
STORMWATER PLAN - SHEET 4

SCALE	DRAWN	DESIGNED	CHECKED	APPROVED
AS SHOWN	M.T.	M.Cz.	L.S.	L.S.

JOB No.	DRAWING No.	ISSUE
6817000	C6.05	3

DATE	STATUS
JANUARY 2019	SSDA

Xrefs: X-6817000-TB, ATH; X-6817000-SU_Boundary; X-6817000-TB_Key Plan; Frames; X-6817000-SU_Existing Utilities; X-6817000-SW_Deviation; X-6817000-AR_Ground Floor; X-6817000-SU_Survey; X-6817000-SW_Layout; X-6817000-AR_Carpark; X-6817000-SW_Subsoil; X-6817000-SW_Stormwater Plan - Sheet 1.dwg
Plot Date: 10/09 2020@16:57:31 Login Name: MCzyla Cad File: T:\6817000\Drawings\AutoCAD\Civil\Design\Civil 22\C06.06 Stormwater Plan - Sheet 1.dwg

FOR CONTINUATION REFER TO INSET C6.05

CARPARK HYDRAULIC ROOF DRAINAGE TO CONNECTION TO PITS 1/6 , 2/6 , 3/6.

EXISTING VEHICULAR CROSSING TO BE EXTENDED AS SHOWN. EXISTING STORMWATER KERB INLET PITS WITH LINTELS TO BE ADJUSTED AND NEW CLASS E BOLT DOWN V-GRATES (2 X 900 X 600) TO BE PROVIDED TO THE STORMWATER PITS WITHIN THE VEHICULAR CROSSING.

ALMA STREET

FOR CONTINUATION REFER TO INSET B

LEGEND

	INDICATIVE OVERLAND FLOW ROUTE
Ø450	PIPE DIAMETER AND DIRECTION OF FLOW
SW	STORMWATER PIPE (SIZE <Ø1050)
esw	EXISTING STORMWATER PIPE
es	EXISTING SEWER LINE
Ø225	PIPE DIAMETER AND DIRECTION OF FLOW
S	SEWER DEVIATION
SSD	SUBSOIL DRAINAGE LINE
SSD HER O	SUBSOIL HIGH END RISER
SSD	SUBSOIL INTERMEDIATE RISER
	SUBSOIL DRAINAGE LINE UNDER PAVEMENT
	STORMWATER DEVIATION
	EXISTING EASEMENT
	900 x 900 JUNCTION PIT
	900 x 900 GRATED INLET PIT
	PIT STRUCTURE NUMBER
	STORMWATER LINE NUMBER
GD	GRATED TRENCH DRAIN

NOTE:

1. OCEAN PROTECT ENVIROPOD FILTERS ARE TO BE INSTALLED IN PITS: 1/1, 2/1, 3/1, 4/1, 5/1, 6/1, 2/3, 2/4, 3/4, 4/4, 5/4, 1/5, 1/6, 2/6, 3/6. OIL SOAK BY MYCELX TO BE INSTALLED WITHIN THE OCEAN GUARD IN PIT 3/6.
2. REFER TO ARBORIST'S REPORT FOR ALL WORKS WITHIN THE TREE PROTECTION ZONE OF TREES TO BE RETAINED.

INSET B

NORTH

PRELIMINARY - NOT FOR CONSTRUCTION

DO NOT SCALE FROM DRAWINGS, CHECK & VERIFY ALL DIMENSIONS & LEVELS BEFORE COMMENCEMENT OF ANY WORK.

THIS DRAWING IS NOT TO BE COPIED IN PART OR WHOLE WITHOUT WRITTEN PERMISSION FROM WARREN SMITH AND PARTNERS.

NORTH

1.0 0 1.0 2.0 3.0 4.0 5.0m
PLAN SCALE 1:100 A1 SHEET

REVISION	AMENDMENT	DATE	REVISION	AMENDMENT	DATE
1	90% SSDA ISSUE	21/08/20			
2	95% SSDA ISSUE	03/09/20			
3	SSDA ISSUE	09/09/20			

CLIENT SYDNEY GRAMMAR SCHOOL

PROJECT
SYDNEY GRAMMAR SCHOOL
WEIGALL SPORTS COMPLEX
& CARPARK

PREPARED BY
Warren Smith & Partners Pty Ltd
Level 9, 233 Castlereagh Street, Sydney 2000 NSW Australia
02 9299 1312 wsp@warrensmith.com.au
www.warrensmith.com.au ABN 36 300 430 126
Consulting Engineers
Hydraulic Fire Civil Utilities Infrastructure
SERVING THE CONSTRUCTION INDUSTRY SINCE 1981.

TITLE
STORMWATER PLAN - SHEET 5

SCALE	DRAWN	DESIGNED	CHECKED	APPROVED
AS SHOWN	M.T.	M.Cz.	L.S.	L.S.

JOB No.	DRAWING No.	ISSUE
6817000	C6.06	3

DATE	STATUS
JANUARY 2019	SSDA

Xrefs: X-6817000-TB_A1H, X-6817000-SU_Boundary, X-6817000-TB_Key Plan, Frames, X-6817000-SU_Existing Utilities, X-6817000-SW_Deviation, X-6817000-AR_Ground Floor, X-6817000-SU_Survey, X-6817000-SW_Layout, X-6817000-AR_Carpark, X-6817000-SW_Subsoil, X-6817000-DE_Design, X-6817000-DE_Design Contours, X-6817000-SEWER_Deviation, X-6817000-SU_Existing Utilities - Sewer and SW
Plot Date: 10/09/2020@17:02:25 Login Name: NGupta Cad File: T-6817000Drawings\AutoCAD\Cad\Design\Civil 25\C6.06 Stormwater Plan - Sheet 5.dwg

NAME	SURFACE ELEV. (m)	PIT DEPTH (m)	PIT SIZE AND TYPE	FROM	TO	LENGTH (m)	U/S IL (m)	D/S IL (m)	SLOPE (%)	PIPE TYPE	DIA (mm)	No. PIPES
Pit 1/1	6.7	0.75	900SQ PIT CLASS B GRATE	Pit 1/1	Pit 2/1	23.74	5.95	5.63	1.35	RCP CLASS 3	300	1
Pit 2/1	6.38	0.78	900SQ PIT CLASS B GRATE	Pit 2/1	Pit 3/1	28.31	5.60	5.47	0.46	RCP CLASS 3	300	1
Pit 3/1	6.25	0.81	900SQ PIT CLASS B GRATE	Pit 3/1	Pit 4/1	24.07	5.44	5.12	1.33	RCP CLASS 3	300	1
Pit 4/1	6.02	0.93	900SQ PIT WITH 450 x 900 GLASS D SINGLE GRATE WITH 1.2m LINTEL OPENING	Pit 4/1	Pit 5/1	12.74	5.09	5.02	0.55	RCP CLASS 3	300	1
Pit 5/1	6.08	1.09	900SQ PIT CLASS B GRATE	Pit 5/1	Pit 6/1	19.23	4.99	4.80	0.99	RCP CLASS 3	300	1
Pit 6/1	5.78	1.12	1200SQ PIT WITH 900SQ CLASS B GRATE	Pit 6/1	Existing Pit on Nield Avenue	7.31	4.66	4.60	0.82	RCP CLASS 3	300	1
Pit 1/2	VARIES 5.93 - 5.96	0.20m - 0.26m	6.00m LONG K200 ACO TRENCH DRAINS WITH CLASS D HEELSAFE GRATE	Pit 1/2	Pit 5/1	9.86	5.33	5.23	1.01	uPVC (SN8)	150	1
Pit 1/3	VARIES 5.60 - 5.61	0.20m - 0.24m	3.8m LONG K200 ACO TRENCH DRAINS WITH CLASS B HEELSAFE GRATE	Pit 1/3	Pit 2/3	3.32	5	4.95	1.51	uPVC (SN8)	150	1
Pit 2/3	5.61	0.69	600SQ PIT CLASS B GRATE; 3.2m LONG K200 ACO TRENCH DRAINS WITH CLASS B HEELSAFE GRATE	Pit 2/3	Pit 6/1	20.53	4.92	4.71	1.02	RCP CLASS 3	225	1
Pit 1/4	VARIES 5.52 - 5.58	0.20m - 0.26m	5.36m LONG K200 ACO TRENCH DRAINS WITH CLASS D HEELSAFE GRATE	Pit 1/4	Pit 2/4	9.94	4.77	3.80	9.76	uPVC (SN8)	150	1
Pit 2/4	4.4	0.68	600SQ PIT WITH CLASS B GRATE	Pit 2/4	Pit 3/4	22.82	3.72	3.29	1.88	uPVC (SN8)	225	1
Pit 3/4	4.12	1.79	900SQ PIT CLASS B GRATE	Pit 3/4	Pit 4/4	13.61	2.33	2.26	0.51	RCP CLASS 3	375	1
Pit 4/4	4.31	2.08	900SQ PIT CLASS B GRATE; 1.8m LONG K200 ACO TRENCH DRAINS WITH CLASS B HEELSAFE GRATE	Pit 4/4	Pit 5/4	12.25	2.23	2.16	0.57	RCP CLASS 3	375	1
Pit 5/4	4.16	2.03	2.25m DIAMETER MANHOLE WITH 900SQ CLASS B GRATE	Pit 5/4	Deviation Pit	9.55	2.13	2	1.36	RCP CLASS 3	375	1
Pit 1/5	5.10	0.68	600SQ CLASS B GRATE	Pit 1/5	Pit 5/4	6.31	4.42	3.47	13.75	uPVC (SN8)	225	1
Pit 1/6	3.83	0.75	900SQ PIT CLASS B COVER	Pit 1/6	Pit 2/6	13.94	3.08	3.01	0.50	RCP CLASS 3	300	1
Pit 2/6	4.09	1.11	900SQ PIT CLASS B COVER	Pit 2/6	Pit 3/6	15.15	2.98	2.90	0.53	RCP CLASS 3	300	1
Pit 3/6	3.93	1.53	900SQ PIT CLASS B COVER	Pit 3/6	Pit 3/4	7.22	2.4	2.36	0.55	RCP CLASS 3	375	1
				OSD	Pit 1/7	12.21	4	3.32	5.57	RCP CLASS 3	300	1
Pit 1/7	4.15	2.38	1200SQ PIT WITH CLASS B COVER									

PRELIMINARY - NOT FOR CONSTRUCTION

DO NOT SCALE FROM DRAWINGS, CHECK & VERIFY ALL DIMENSIONS & LEVELS BEFORE COMMENCEMENT OF ANY WORK.

THIS DRAWING IS NOT TO BE COPIED IN PART OR WHOLE WITHOUT WRITTEN PERMISSION FROM WARREN SMITH AND PARTNERS.

REVISION	AMENDMENT	DATE	REVISION	AMENDMENT	DATE
1	95% SSDA ISSUE	03/09/20			
2	SSDA ISSUE	09/09/20			

CLIENT SYDNEY GRAMMAR SCHOOL

PROJECT
SYDNEY GRAMMAR SCHOOL
WEIGALL SPORTS COMPLEX
& CARPARK

PREPARED BY
Warren Smith & Partners
Warren Smith & Partners Pty Ltd
Level 9, 233 Castlereagh Street, Sydney 2000 NSW Australia
02 9299 1312 wsp@warrensmith.com.au
www.warrensmith.com.au ABN 36 300 430 126
Consulting Engineers
Hydraulic Fire Civil Utilities Infrastructure
SERVING THE CONSTRUCTION INDUSTRY SINCE 1981.

TITLE
STORMWATER PIT SCHEDULE

SCALE	DRAWN	DESIGNED	CHECKED	APPROVED
AS SHOWN	M.T.	M.Cz.	L.S.	L.S.

JOB No.	DRAWING No.	ISSUE
6817000	C6.07	2

DATE	STATUS
SEPTEMBER 2020	SSDA

Xref: X:\6817000\TB_A1H
Plot Date: 10.09.2020@16:51:28 Login Name: mccarrosta Cad File: T:\6817000\Drawings\AutoCAD\Civil\Design\Civil 2D\C6.07 Stormwater Pit Schedule.dwg

0 10 20 30 40 50 60 70 80 90 100 110 120 130 140 150

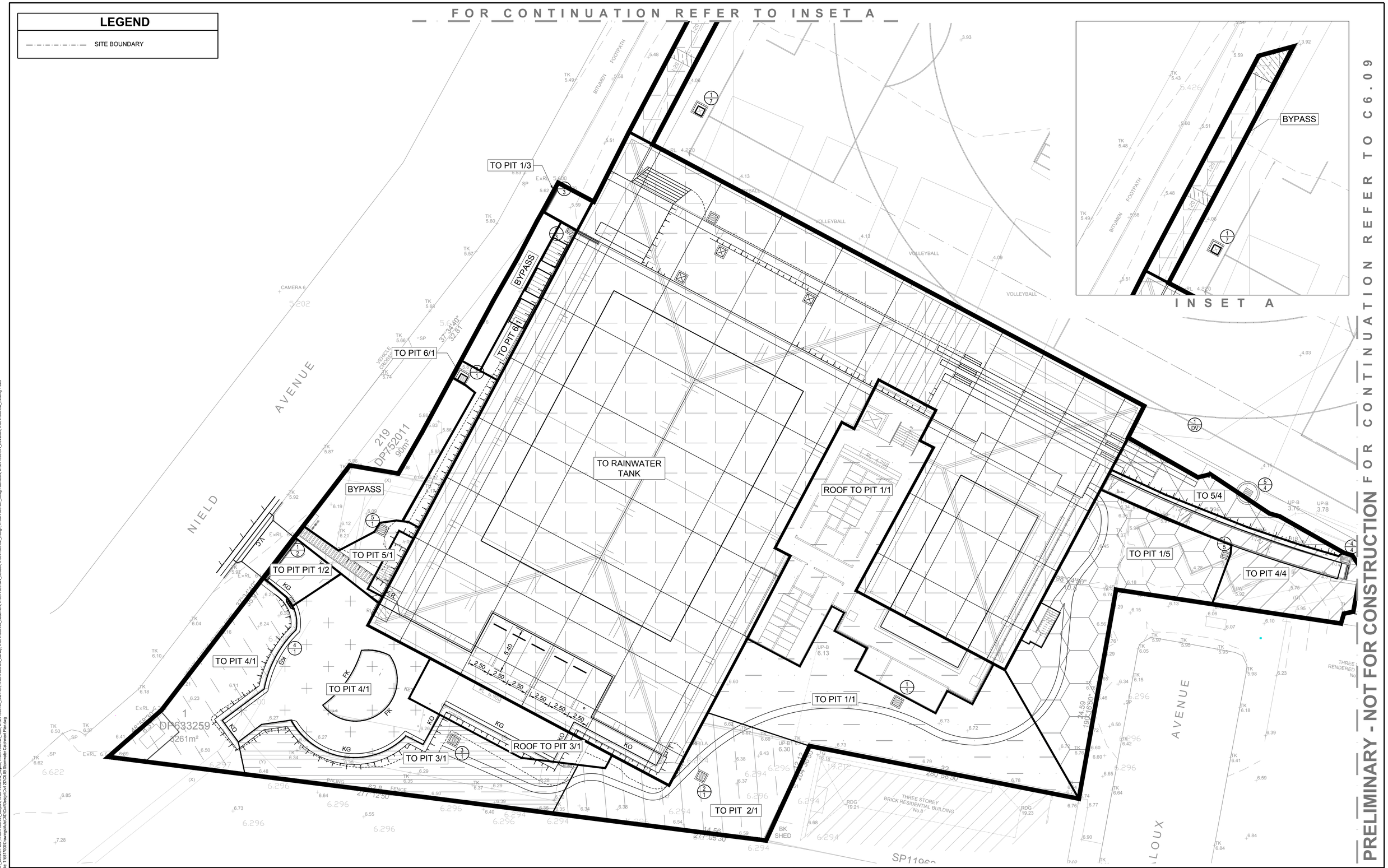

DO NOT SCALE FROM DRAWINGS, CHECK & VERIFY ALL DIMENSIONS & LEVELS BEFORE COMMENCEMENT OF ANY WORK.

THIS DRAWING IS NOT TO BE COPIED IN PART OR WHOLE WITHOUT WRITTEN PERMISSION FROM WARREN SMITH AND PARTNERS.

NORTH

2.5 0 2.5 5.0 7.5 10.0m
PLAN SCALE 1:200 A1 SHEET

REVISION	AMENDMENT	DATE	REVISION	AMENDMENT	DATE
1	90% SSDA ISSUE	21/08/20			
2	95% SSDA ISSUE	03/09/20			
3	SSDA ISSUE	09/09/20			

CLIENT SYDNEY GRAMMAR SCHOOL

PROJECT
SYDNEY GRAMMAR SCHOOL
WEIGALL SPORTS COMPLEX
& CARPARK

PREPARED BY
Warren Smith & Partners
Warren Smith & Partners Pty Ltd
Level 9, 233 Castlereagh Street, Sydney 2000 NSW Australia
02 9299 1312 wsp@warrensmith.com.au
www.warrensmith.com.au ABN 36 300 430 126
Consulting Engineers
Hydraulic Fire Civil Utilities Infrastructure
GCC ISO 9001 Certified
SERVING THE CONSTRUCTION INDUSTRY SINCE 1981.

TITLE
STORMWATER CATCHMENT PLAN - SHEET 1

SCALE	DRAWN	DESIGNED	CHECKED	APPROVED
AS SHOWN	M.T.	M.Cz.	L.S.	L.S.

JOB No.	DRAWING No.	ISSUE
6817000	C6.08	3

DATE	STATUS
SEPTEMBER 2020	SSDA

Xrefs: X-6817000-TB_A1H; X-6817000-SIU_Boundary; X-6817000-AR_Ground Floor; X-6817000-AR_Carpark; X-6817000-SW_Layout; X-6817000-AR_Roof; X-6817000-AR_Site Plan; X-6817000-SIU_Survey; X-6817000-SW_Basement; X-6817000-SW_Subsoil; X-6817000-DE_Design; X-6817000-DE_Design Contours; X-6817000-SW_Development
Plot Date: 10.09.2020@12:27:56 Login Name: NGupta Cad File: T:\6817000\Drawings\AutoCAD\Cad\Design\Civil 2D\C6.09 Stormwater Catchment Plan.dwg

LEGEND

—·—·—·—	SITE BOUNDARY

DO NOT SCALE FROM DRAWINGS, CHECK & VERIFY ALL DIMENSIONS & LEVELS BEFORE COMMENCEMENT OF ANY WORK.

THIS DRAWING IS NOT TO BE COPIED IN PART OR WHOLE WITHOUT WRITTEN PERMISSION FROM WARREN SMITH AND PARTNERS.

NORTH

2.5 0 2.5 5.0 7.5 10.0m
PLAN SCALE 1:200 A1 SHEET

REVISION	AMENDMENT	DATE	REVISION	AMENDMENT	DATE
1	90% SSDA ISSUE	21/08/20			
2	95% SSDA ISSUE	03/09/20			
3	SSDA ISSUE	09/09/20			

CLIENT SYDNEY GRAMMAR SCHOOL

PROJECT
SYDNEY GRAMMAR SCHOOL
WEIGALL SPORTS COMPLEX
& CARPARK

PREPARED BY
Warren Smith & Partners
Warren Smith & Partners Pty Ltd
Level 9, 233 Castlereagh Street, Sydney 2000 NSW Australia
02 9299 1312 wsp@warrensmith.com.au
www.warrensmith.com.au ABN 36 300 430 126
Consulting Engineers
Hydraulic Fire Civil Utilities Infrastructure
GCC ISO 9001 Certified
SERVING THE CONSTRUCTION INDUSTRY SINCE 1981.

TITLE
STORMWATER CATCHMENT PLAN - SHEET 2

SCALE	DRAWN	DESIGNED	CHECKED	APPROVED
AS SHOWN	M.T.	M.Cz.	L.S.	L.S.

JOB No.	DRAWING No.	ISSUE
6817000	C6.09	3

DATE	STATUS
SEPTEMBER 2020	SSDA

Xref's: K-6817000-TB, A1H, K-6817000-SU_Boundary, X-6817000-AR_Ground Floor, X-6817000-AR_Carpark, X-6817000-SW_Layout, X-6817000-AR_Roof, X-6817000-AR_Site Plan, X-6817000-SU_Survey, X-6817000-AR_Basement, X-6817000-SW_Subsoil, X-6817000-DE_Design, X-6817000-DE_Design Contours, X-6817000-SW_Detailed, X-6817000-SU_Existing Trees
Plot Date: 10.09.2020@14:54:15 Login Name: NGupta Cad File: T:\6817000\Drawings\AutoCAD\Civil\Design\Civil 2D\C6.09 Stormwater Catchment Plan.dwg

AEP STORM (%)	PRE DEVELOPMENT (L/s)	POST-DEVELOPMENT (L/s)
50	204	203
20	295	285
10	376	368
5	457	430
2	574	509
1	666	550

NOTES:

1. STORMWATER NETWORK FOR THE PROPOSED DEVELOPMENT HAS BEEN DESIGNED SUCH THAT THE POST DEVELOPMENT DISCHARGE FROM THE SITE SHALL NOT EXCEED PRE DEVELOPMENT DISCHARGE FOR ALL THE STORM EVENTS.

   REFER TO TABLES FOR DEVELOPMENT AREA DISCHARGE RESULTS.

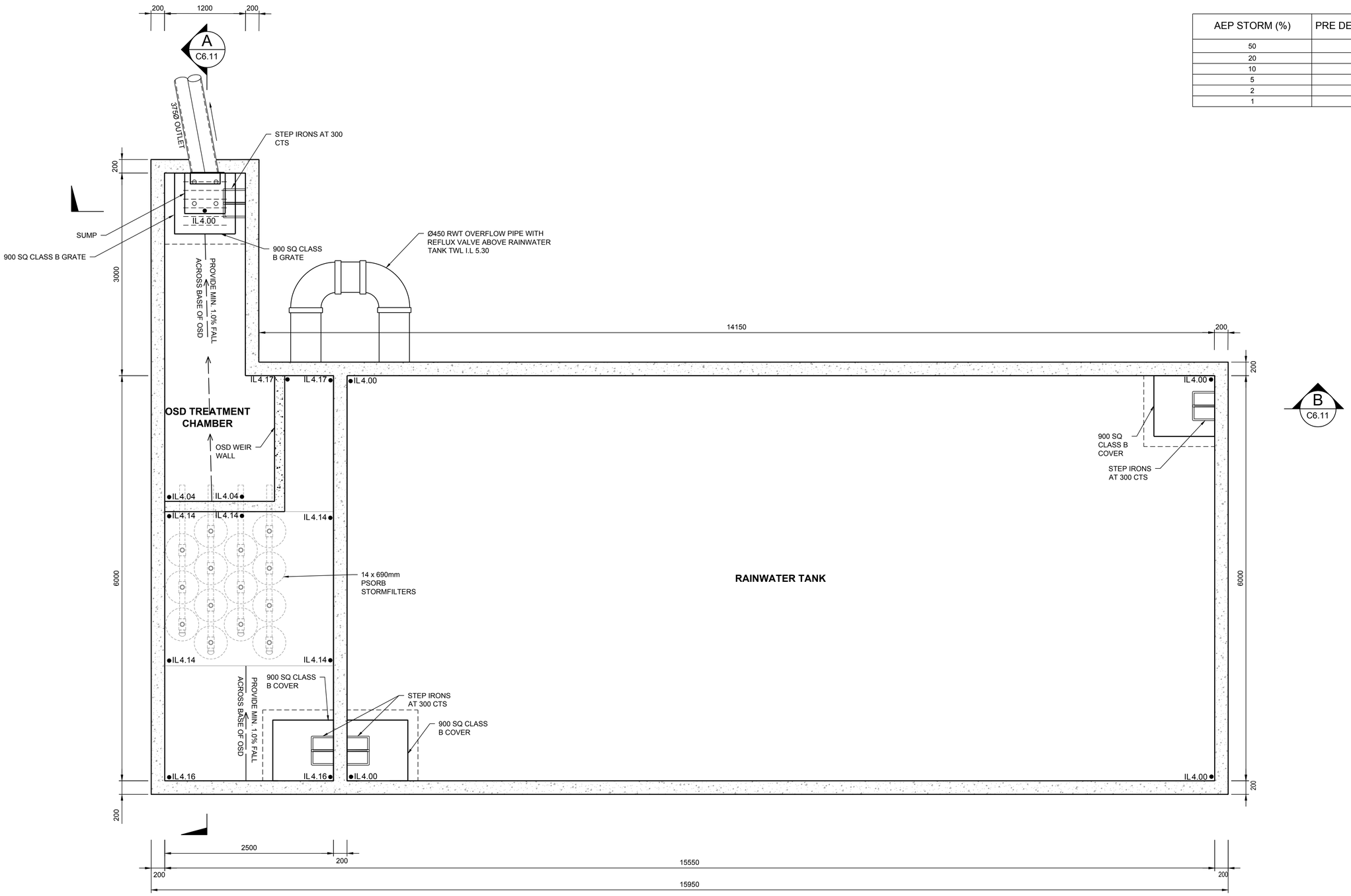

ON SITE DETENTION TANK AND RAINWATER TANK PLAN

EFFECTIVE VOLUME OSD = 22.32m³ RWT = 100m³

SCALE: 1:30

PRELIMINARY - NOT FOR CONSTRUCTION

DO NOT SCALE FROM DRAWINGS, CHECK & VERIFY ALL DIMENSIONS & LEVELS BEFORE COMMENCEMENT OF ANY WORK.

THIS DRAWING IS NOT TO BE COPIED IN PART OR WHOLE WITHOUT WRITTEN PERMISSION FROM WARREN SMITH AND PARTNERS.

REVISION	AMENDMENT	DATE	REVISION	AMENDMENT	DATE
1	95% SSDA ISSUE	03/09/20			
2	SSDA ISSUE	09/09/20			

CLIENT: SYDNEY GRAMMAR SCHOOL

PROJECT: SYDNEY GRAMMAR SCHOOL WEIGALL SPORTS COMPLEX & CARPARK

PREPARED BY
Warren Smith & Partners Pty Ltd
Level 9, 233 Castlereagh Street, Sydney 2000 NSW Australia
02 9299 1312 wsp@warrensmith.com.au
www.warrensmith.com.au ABN 36 300 430 126
Consulting Engineers
Hydraulic Fire Civil Utilities Infrastructure
SERVING THE CONSTRUCTION INDUSTRY SINCE 1981.

TITLE: **OSD PLAN**

SCALE	DRAWN	DESIGNED	CHECKED	APPROVED
AS SHOWN	M.T.	M.CZ.	L.S.	L.S.

JOB No.	DRAWING No.	ISSUE
6817000	C6.10	2

DATE	STATUS
SEPTEMBER 2020	SSDA

Xrefs: X-6817000-TB_A1H
Plot Date: 10/09/2020@14:31:26 Login Name: NGupta Cad File: T:\6817000\Drawings\AutoCAD\Civil\Design\Civil 2D\C6.10 OSD Plan.dwg

0 10 20 30 40 50 60 70 80 90 100 110 120 130 140 150

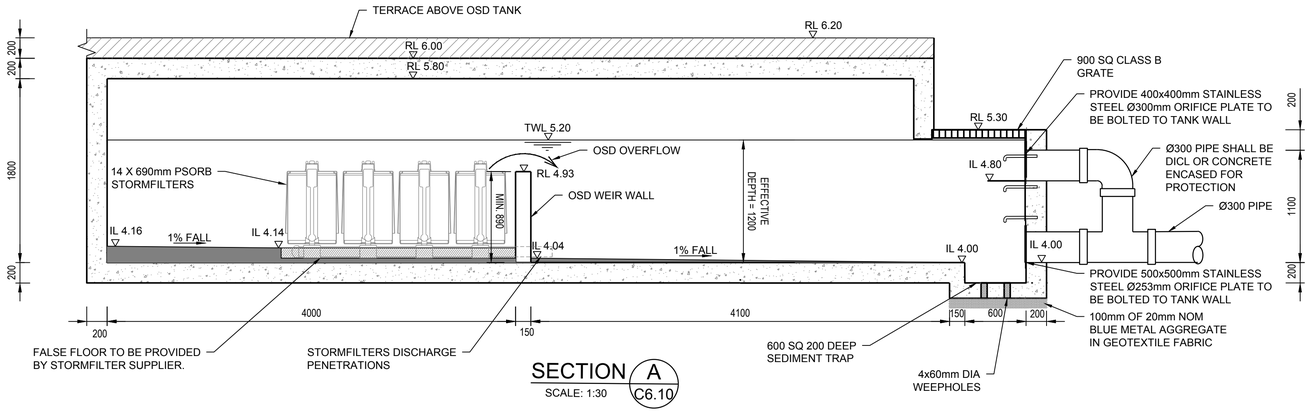

SECTION A C6.10
SCALE: 1:30

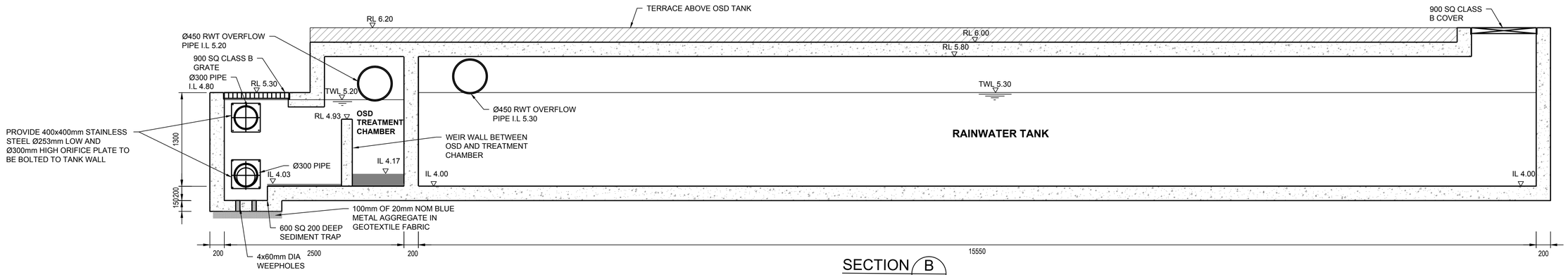

SECTION B C6.10
SCALE: 1:30

PRELIMINARY - NOT FOR CONSTRUCTION

DO NOT SCALE FROM DRAWINGS, CHECK & VERIFY ALL DIMENSIONS & LEVELS BEFORE COMMENCEMENT OF ANY WORK.

THIS DRAWING IS NOT TO BE COPIED IN PART OR WHOLE WITHOUT WRITTEN PERMISSION FROM WARREN SMITH AND PARTNERS.

REVISION	AMENDMENT	DATE	REVISION	AMENDMENT	DATE
1	95% SSDA ISSUE	03/09/20			
2	SSDA ISSUE	09/09/20			

CLIENT: SYDNEY GRAMMAR SCHOOL

PROJECT: SYDNEY GRAMMAR SCHOOL WEIGALL SPORTS COMPLEX & CARPARK

PREPARED BY
Warren Smith & Partners
Warren Smith & Partners Pty Ltd
Level 9, 233 Castlereagh Street, Sydney 2000 NSW Australia
02 9299 1312 wsp@warrensmith.com.au
www.warrensmith.com.au **ABN** 36 300 430 126
Consulting Engineers
Hydraulic Fire Civil Utilities Infrastructure
GCC ISO 9001 Certified
SERVING THE CONSTRUCTION INDUSTRY SINCE 1981.

TITLE: **OSD SECTIONS**

SCALE	DRAWN	DESIGNED	CHECKED	APPROVED
AS SHOWN	M.T.	M.CZ.	L.S.	L.S.

JOB No.	DRAWING No.	ISSUE
6817000	C6.11	2

DATE	STATUS
SEPTEMBER 2020	SSDA

Xrefs: X-6817000-TB_A1H
Plot Date: 10.09.2020@14:33:14 Login Name: NGupta Cad File: T:\6817000\Drawings\AutoCAD\Civil\Design\Civil 2D\C6.10 OSD Plan.dwg

0 10 20 30 40 50 60 70 80 90 100 110 120 130 140 150

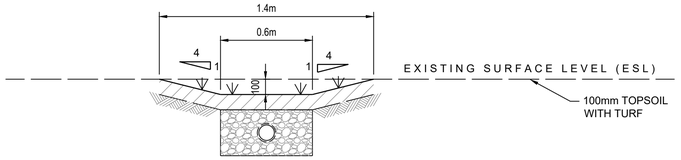

PROPOSED GRASS LINED SWALE

SCALE 1:20

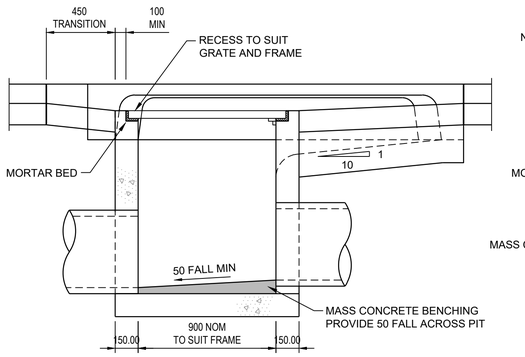

DETAIL 1/-

SCALE 1:20

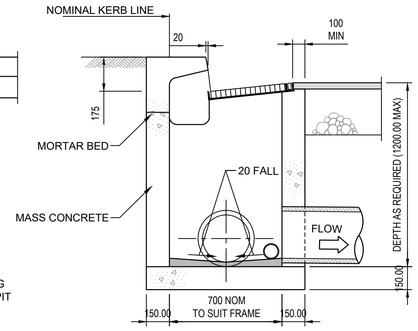

DETAIL 2/-

SCALE 1:20

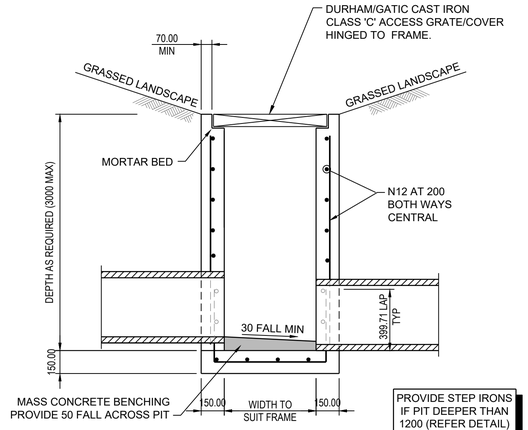

PROVIDE STEP IRONS IF PIT DEEPER THAN 1200 (REFER DETAIL)

DETAIL D1/2 -

SCALE 1:20

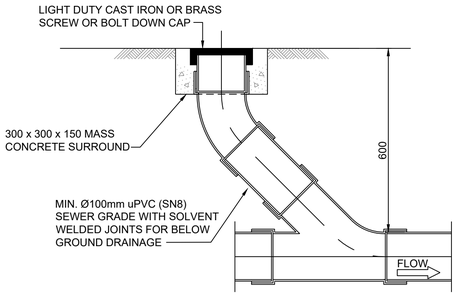

CLEAROUT (CO)

SCALE 1:10

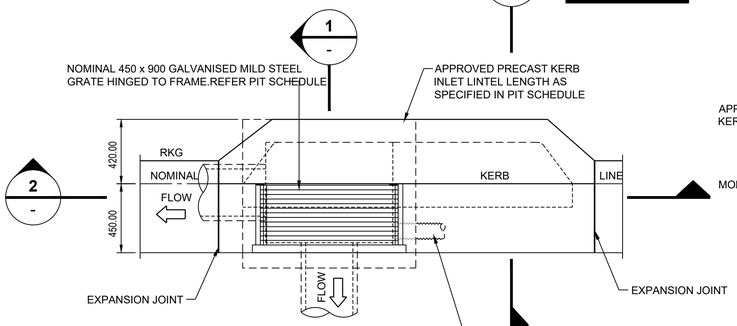

PLAN

SCALE 1:20

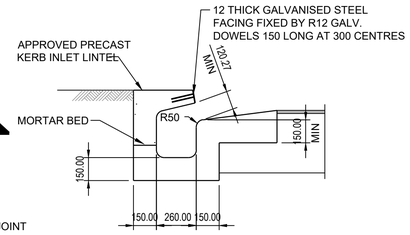

DETAIL 3/-

SCALE 1:20

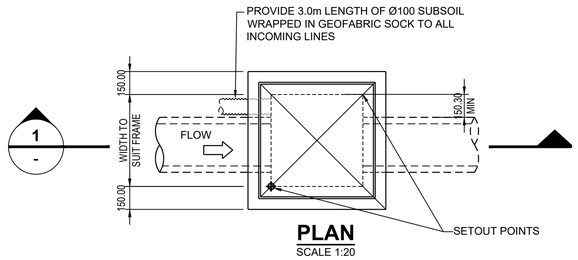

PLAN

SCALE 1:20

600 - 900SQ SURFACE INLET PITS

GRATED KERB INLET PIT

(PIPE SIZES ≤ Ø375 STRAIGHT ENTRY)

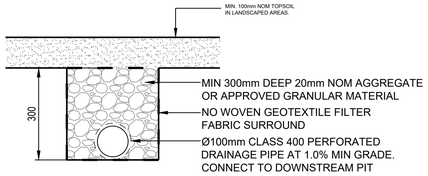

SUBSOIL IN LANDSCAPING AREA

SCALE 1:10

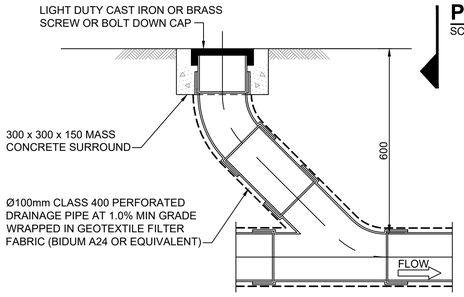

INTERMEDIATE RISER (IR)

SCALE 1:10

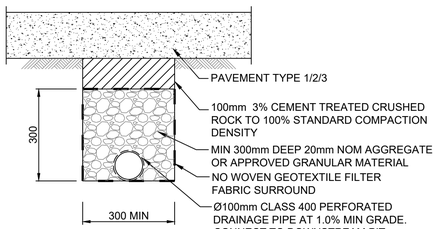

SUBSOIL DRAINAGE UNDER PAVEMENT

SCALE 1:10

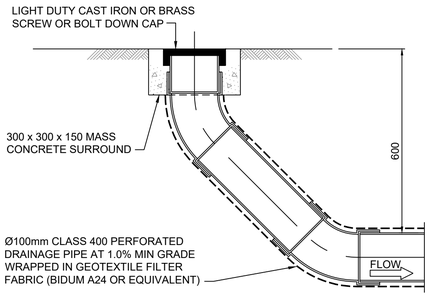

HIGH END RISER (HER)

SCALE 1:10

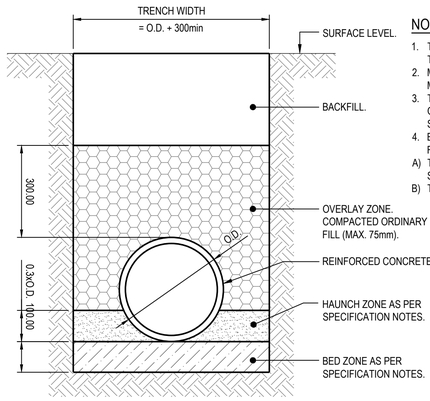

GENERAL AREAS

TYPICAL PIPE TRENCH

NOT TO SCALE

NOTES:

1. TRENCH WIDTH MAY NEED TO BE INCREASED SUBJECT TO ACHIEVING ADEQUATE COMPACTION.
2. MINIMUM PIPE COVER NOT UNDER ROADS = 450mm UNO. MINIMUM PIPE COVER UNDER ROADS = 600mm UNO.
3. THE CONTRACTOR SHALL ENSURE THAT THE SHORING OF TRENCHES IS INSTALLED AS REQUIRED BY STATUTORY REQUIREMENTS.
4. ENSURE BACKFILLING COMPACTION MEETS THE FOLLOWING STANDARDS;

A) TRENCHES UNDER PAVED AREAS & BUILDINGS - 100% SMDD.
B) TRENCHES NOT UNDER PAVEMENTS - 90% SMDD.

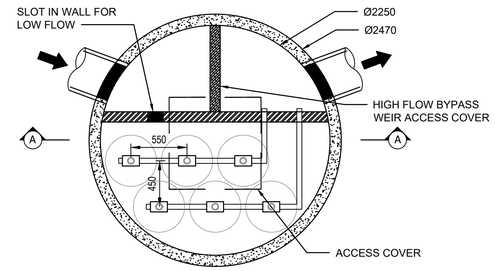

PLAN

SCALE 1:30

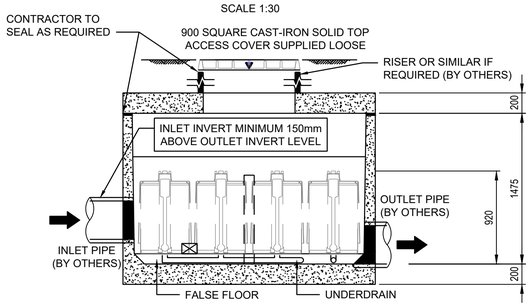

SECTION A-A

SCALE 1:30

PRELIMINARY - NOT FOR CONSTRUCTION

DO NOT SCALE FROM DRAWINGS, CHECK & VERIFY ALL DIMENSIONS & LEVELS BEFORE COMMENCEMENT OF ANY WORK.

THIS DRAWING IS NOT TO BE COPIED IN PART OR WHOLE WITHOUT WRITTEN PERMISSION FROM WARREN SMITH AND PARTNERS.

100 0 100 200 300 400 500mm
PLAN SCALE 1:10 A1 SHEET
200 0 200 400 600 800 1000mm
PLAN SCALE 1:20 A1 SHEET

REVISION	AMENDMENT	DATE	REVISION	AMENDMENT	DATE
1	90% SSDA ISSUE	21/08/20			
2	95% SSDA ISSUE	03/09/20			
3	SSDA ISSUE	09/09/20			

CLIENT SYDNEY GRAMMAR SCHOOL

PROJECT
SYDNEY GRAMMAR SCHOOL
WEIGALL SPORTS COMPLEX
& CARPARK

PREPARED BY
Warren Smith & Partners
Warren Smith & Partners Pty Ltd
Level 9, 233 Castlereagh Street, Sydney 2000 NSW Australia
02 9299 1312 wsp@warrensmith.com.au
www.warrensmith.com.au ABN 36 300 430 126
Consulting Engineers
Hydraulic Fire Civil Utilities Infrastructure
GCC ISO 9001 Certified
SERVING THE CONSTRUCTION INDUSTRY SINCE 1981.

TITLE
STORMWATER DRAINAGE DETAILS

SCALE	DRAWN	DESIGNED	CHECKED	APPROVED
AS SHOWN	M.T.	M.Cz.	L.S.	L.S.

JOB No.	DRAWING No.	ISSUE
6817000	C6.12	3

DATE	STATUS
SEPTEMBER 2020	SSDA

Xrefs: X-6817000-TB_A1H
Plot Date: 09.09.2020@17:28:33 Login Name: mstaz Cad File: T:\6817000\Drawings\AutoCAD\Civil\Design\Civil 2\C6.12 Stormwater Drainage Details.dwg

0 10 20 30 40 50 60 70 80 90 100 110 120 130 140 150

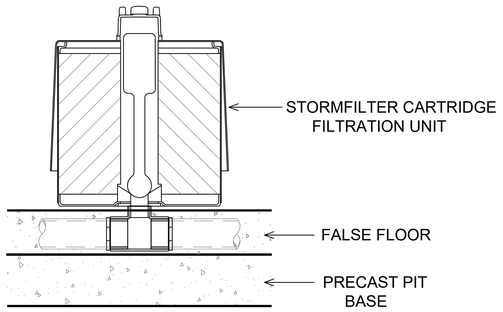

STORMFILTER CARTRIDGE DETAIL

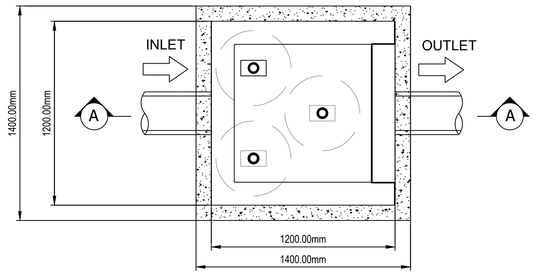

PLAN LAYOUT

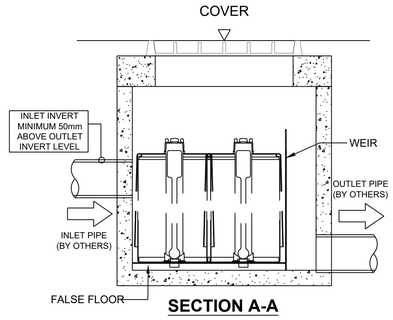

SECTION A-A

TYPICAL DETAIL OF WATER QUALITY TREATMENT PIT WITH 690 PSORB STORMFILTER

SCALE 1:20

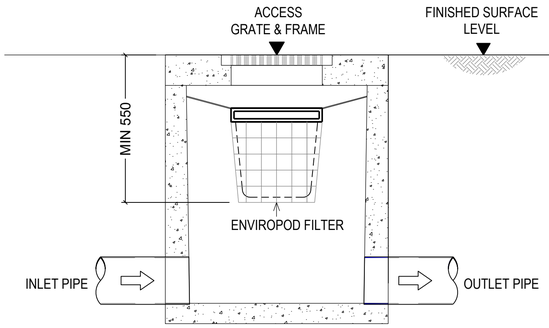

STANDARD OCEANGUARD CONFIGURATION SECTION

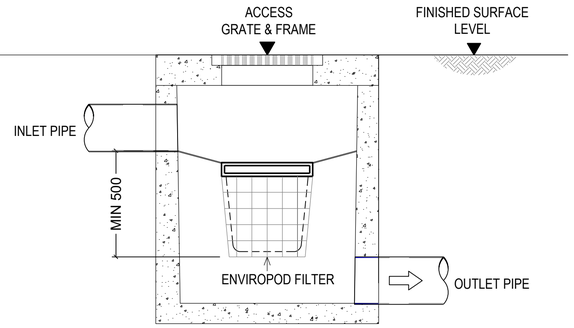

DROP PIPE OCEANGUARD CONFIGURATION SECTION

PRELIMINARY - NOT FOR CONSTRUCTION

DO NOT SCALE FROM DRAWINGS, CHECK & VERIFY ALL DIMENSIONS & LEVELS BEFORE COMMENCEMENT OF ANY WORK.

THIS DRAWING IS NOT TO BE COPIED IN PART OR WHOLE WITHOUT WRITTEN PERMISSION FROM WARREN SMITH AND PARTNERS.

REVISION	AMENDMENT	DATE	REVISION	AMENDMENT	DATE
1	90% SSDA ISSUE	21/08/20			
2	95% SSDA ISSUE	03/09/20			
3	SSDA ISSUE	09/09/20			

CLIENT: SYDNEY GRAMMAR SCHOOL

PROJECT: SYDNEY GRAMMAR SCHOOL WEIGALL SPORTS COMPLEX & CARPARK

PREPARED BY
Warren Smith & Partners
Warren Smith & Partners Pty Ltd
Level 9, 233 Castlereagh Street, Sydney 2000 NSW Australia
02 9299 1312 wsp@warrensmith.com.au
www.warrensmith.com.au ABN 36 300 430 126
Consulting Engineers
Hydraulic Fire Civil Utilities Infrastructure
ISO 9001 Certified
SERVING THE CONSTRUCTION INDUSTRY SINCE 1981.

TITLE: **OCEAN PROTECT TREATMENT DEVICE TYPICAL DETAILS**

SCALE	DRAWN	DESIGNED	CHECKED	APPROVED
AS SHOWN	M.T.	M.CZ.	L.S.	L.S.

JOB No.	DRAWING No.	ISSUE
6817000	C6.13	3

DATE	STATUS
AUGUST 2020	SSDA

Xrefs: X-6817000-TB_A1H
Plot Date: 09.09.2020@17:26:10 Login Name: molaz Cad File: T:\6817000\Drawings\AutoCAD\Civil\Design\Civil 2\C6.13 Ocean Protect Treatment Device Typical Details.dwg

0 10 20 30 40 50 60 70 80 90 100 110 120 130 140 150