Blacktown Olympic Park Sydney

Blacktown Olympic Park

# Advertising proposal

## Statement of Environmental Effects

stuart j hill planning • environment • development

PREPARED BY:

Stuart J Hill P/L
PO Box 6148
HAMMONDVILLE NSW 2170
T: 0414957376
Email: stuart@stuarthill.com.au

PREPARED FOR:

Blacktown Olympic Park
PO Box 63
Blacktown NSW 2148

COPYRIGHT:
The concepts and information contained in this document are the property of the Blacktown City Council. Use or copying of this document in whole or in part without the written permission of the Blacktown City Council constitutes an infringement of copyright.

## Document controls

| | | | |
|---|---|---|---|
| File name | 10-008 SEE FINAL.docx | | |
| Report name | Outdoor advertising proposal<br>Blacktown Olympic Park<br>Statement of Environmental Effects | | |
| Document version | Final | | |
| Prepared by: | Stuart Hill | Date: | 14 January 2011 |

Prepared by Stuart J. Hill Pty Ltd for the Blacktown Olympic Park (Blacktown City Council)

Stuart Hill
BTP (Hons) (UNSW), M Env Mgt (Macq.), Dip Law (LPAB)
**Director/Environmental Planner, Stuart J. Hill Pty Ltd**

# Contents

**1** Introduction 1-1

1.1 Preamble 1-1
1.2 Purpose 1-2
1.3 The Western Sydney Parklands 1-2
1.4 Blacktown Olympic Park 1-2

**2** Site and surrounds 2-1

2.1 Site details 2-1
2.2 Site context 2-2

**3** Statutory position 3-1

3.1 Local environmental planning instruments 3-1
3.2 State Environmental Planning Polices 3-1
3.3 Application of Part 4 of the EP&A Act - Confirmation 3-3
3.4 Other relevant legislation 3-3

**4** Proposed development 4-1

4.1 General description 4-1
4.2 Design objectives 4-1

**5** Section 79C assessment 5-1

5.1 Environmental planning instruments 5-1
5.2 Draft environmental planning instruments 5-8
5.3 Development control plans 5-8
5.4 Planning agreements 5-8
5.5 Matters prescribed by the Regulations 5-8
5.6 Impacts of the proposed development 5-9
5.7 Suitability of the site 5-9
5.8 Public submissions 5-9
5.9 The public interest 5-9

**6** Conclusion 6-1

**Figures**

Figure 1-1 Location of the site 1-1
Figure 2-1 Views to Site 1 and Site 2 2-1

**Tables**

Table 5-1 Parklands SEPP – Clause 12 matters 5-1
Table 5-2 Land use compatibility criteria 5-3
Table 5-3 Site specific and structural criteria 5-4
Table 5-4 Road safety assessment critieria 5-6

**Appendices**

Appendix A Photographs
Appendix B Design drawings
Appendix C Photomontages

# Summary statement

The subject matter of the development application is the installation of advertising structures and the display of advertisements within the within the Blacktown Olympic Park precinct at the following four locations.

- Adjacent to the M7 Motorway southbound carriageway approximately 160 metres north of the Eastern Road overbridge.
- Adjacent to the M7 Motorway southbound carriageway immediately north of the Eastern Road overbridge.
- Adjacent to Eastern Road near the intersection with the entrance to Blacktown Olympic Park.
- Adjacent to the Main Western Rail Line approximately 600 metres east of the M7 flyovers.

At each site the proposal involves:

- Construction of a new double-sided, single pole advertising structure for the purposes of displaying advertisements.
- Installation of 18.99 m x 4.5 m (85.445 $m^2$) front lit spectacular signage.
- Installation of steel framed maintenance gantry.
- Connection to power.
- Display of advertisements.

The proposal would not impose any unreasonable impacts on the amenity of surrounding land, or the locality more generally, and has been assessed as generally consistent with the assessment considerations set out in *State Environmental Planning Policy (Western Sydney Parklands) 2009*, relevant guidelines and local planning controls. It is noted that consultation with the RTA regarding the road safety aspects of the proposal would occur following lodgement of the development application.

Further, revenue from advertising would assist in the maintenance and development of Blacktown Olympic Park, a major regional recreation and entertainment facility. In this context the proposal delivers a public benefit.

# 1

# Introduction

## 1.1 Preamble

This Statement of Environmental Effects (SEE) has been prepared to accompany a Development Application (DA) to the Department of Planning. The subject matter of the DA is the installation of advertising structures and the display of advertisements within Blacktown Olympic Park at the following locations:

- Adjacent to the M7 Motorway southbound carriageway approximately 160 metres north of the Eastern Road overbridge (Site 1).
- Adjacent to the M7 Motorway southbound carriageway immediately north of the Eastern Road overbridge (Site 2).
- Adjacent to Eastern Road near the intersection with the vehicle entrance to Blacktown Olympic Park (Site 3).
- Adjacent to the Main Western Rail Line approximately 600 metres east of the M7 flyovers (Site 4).

The proposal is wholly within the Blacktown local government area (Blacktown LGA). Figure 1-1 illustrates the location of the site.

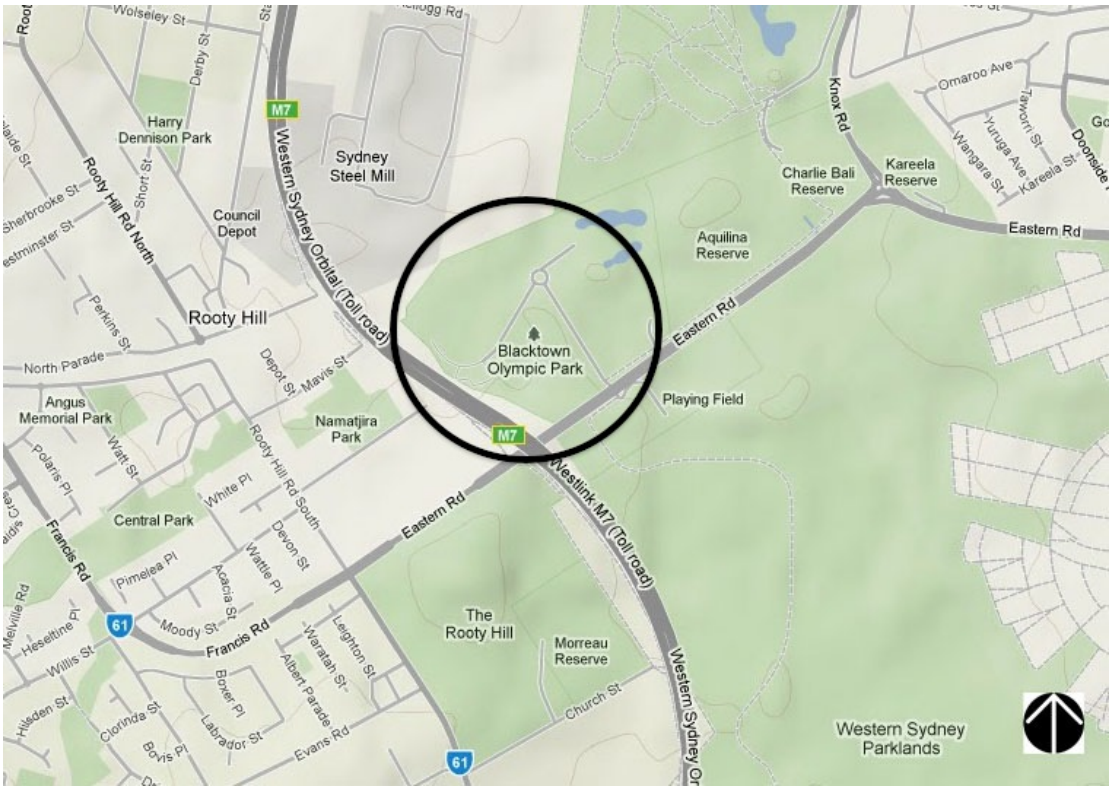


Figure 1-1 Location of the site

## 1.2 Purpose

This SEE has been prepared pursuant to the provisions of the *Environmental Planning and Assessment Act 1979* (EP&A Act) and accompanying Regulation. To that end, it:

- Identifies the subject site and describes the nature of surrounding development.
- Identifies the objectives of the proposed design and describes the physical works.
- Identifies the environmental planning instruments and policies that apply to the subject site and considers the proposed development against those that are relevant.
- Provides an assessment of the proposed development against the heads of consideration specified in Section 79C of the EP&A Act.

## 1.3 The Western Sydney Parklands

Blacktown Olympic Park is located within the boundaries of the Western Sydney Parklands (the Parklands). The Parklands were established as part of the NSW Government's vision for contemporary, urban living in Western Sydney. They contain sporting facilities, popular picnic areas, a full length cycle/walking track and native bushland. Covering 5,280 hectares, the Parklands stretch 27 kilometres from Quakers Hill to Leppington.

The Parklands were established under Part 4 of the *Western Sydney Parklands Act 2006*.

As recognised by the Metropolitan Strategy, it is intended that the Parklands demonstrate best practice in integrated urban parklands for the 21st Century by:

- providing a mix of recreation and conservation uses;
- protecting and promoting ongoing agriculture in suitable areas;
- developing park tourism and commercial uses on sites along the major transport corridors;
- maintaining secluded areas for interaction with nature; and
- delivering significant regional community and recreation facilities.

## 1.4 Blacktown Olympic Park

Blacktown Olympic Park is a multi-sports venue in Doonside and includes three baseball diamonds, four softball diamonds, and an athletics track. It was constructed for the 2000 Sydney Olympics and hosted all softball events and was the secondary venue for baseball. The stadiums combined hold 8,000 people.

In 2009, an additional stadium was constructed for Australian Rules Football and cricket. This stadium has a capacity to hold 10,000 people.

Blacktown City Council controls a company limited by guarantee (Blacktown Venue Management Limited), which is responsible for the operational management and promotion of Blacktown Olympic Park on Council's behalf.

# 2

# Site and surrounds

## 2.1 Site details

The proposal, including all four sites, is located within Blacktown Olympic Park and on land formally known as Lot 1 in DP 1145826. The specific location of each site are shown on the location plans included at Appendix B.

Site 1 is an area of mown grass located immediately to the south of the main car park and a small practice area. Lawn and landscape plantings characterise this area. The M7 Motorway is immediately to the west.

Site two is located in the south-western corner of Blacktown Olympic Park. It is near the M7 Eastern Road overbridge and is also characterised by lawn and landscape plantings.

Figure 2-1 Views to Site 1 and Site 2

View north to Site 1

View to Site 2 (left of image)

Site 3 is located at the intersection between Eastern Road and the Blacktown Olympic Park entrance road. At this location, Eastern Road has a posted speed of 60 km/h and is divided carriageway with two lanes in each direction. The intersection is signalised and controls all movements including right turns to both Blacktown Olympic Park and the playing fields on the southern side of Eastern Road. The intersection includes provision for turning cyclists adjacent to each right turn bay. The perimeter of Blacktown Olympic Park is landscaped with a range of semi mature plantings and ground covers. The entrance to the park includes linear plantings and street banners which give it gateway qualities.

Site 4 is located near the northern perimeter of Blacktown Olympic Park and directly adjacent to the Main Western Rail Line. This area is used for park maintenance and its visual character primarily reflects that use. Tanks, materials storage and some mature trees are key features of this site.

View east along Eastern Road towards Site 3

View east to Site 4

## 2.2 Site context

Blacktown Olympic Park forms part of the open space corridor provided by the Parklands. It is situated at the convergence of two elements of major transport infrastructure, namely the M7 Motorway and the Main Western Railway Line.

To the north is an industrial area as well as Nurragingy Reserve. To the east is Eastern Creek. To the south is Eastern Road, and beyond that playing fields and general parkland areas. To the west is the M7 Motorway, and beyond that residences in the suburb of Rooty Hill.

There is limited existing outdoor adverting in the area. It is however noted that development consent has been granted by the Department of Planning to an outdoor advertising structure adjacent to the M7 Motorway southbound carriageway, approximately 800 metres to the south of Eastern Road.

# 3

# Statutory position

## 3.1 Local environmental planning instruments

The applicable local environmental plan is the Blacktown Local Environmental Plan 1988 (Blacktown LEP).

The Blacktown LEP has limited relevance to the proposal due to the operation of provisions in *State Environmental Planning Policy (Western Sydney Parklands) 2009* (Parklands SEPP). In this context, the following provisions of the Parklands SEPP are specifically relevant:

> *6 Relationship to other planning instruments*
>
> *(4) Except as provided by subclauses (1)–(3), if there is an inconsistency between this Policy and any other environmental planning instrument, whether made before or after the commencement of this Policy, this Policy prevails to the extent of the inconsistency.*
>
> *9 Land use zones*
>
> *(1) Subclause (2) applies to land that before the commencement of this Policy was not in the Western Parklands and was zoned under a local environmental plan but that after the commencement of this Policy is in the Western Parklands.*
>
> *(2) From the commencement of this Policy the land is unzoned.*

The effect of the above provisions is to ensure that planning and land use in the Western Sydney Parklands is primarily regulated by the Parklands SEPP. The Blacktown LEP is therefore not considered further.

## 3.2 State Environmental Planning Polices

Clause 6 of the Parklands SEPP addresses the relationship to other environmental planning instruments including SEPPs. By operation of this provision a number of SEPPs do not apply to the Western Sydney Parklands. Relevantly the excluded SEPPs include *State Environmental Planning Policy No 64—Advertising and Signage* (SEPP 64).

Relevant provisions of the Parklands SEPP and other potentially applicable SEPPs are discussed below.

### State Environmental Planning Policy (Western Sydney Parklands) 2009

The aim of the Parklands SEPP is to establish planning controls to enable development of the Western Parklands into multi-use urban parkland for the region of Western Sydney. Relevant provisions are discussed below.

Clause 10 of the Parklands SEPP, designates the Minister for Planning as the consent authority for, *inter alia*, development on public land that has a capital investment value of less than $5 million. The proposal meets these criteria as the DA is being lodged on behalf of Blacktown City Council, which owns the

subject land. The council is a public authority for the purposes of the EP&A Act and subordinate instruments.

Clause 11 of the Parklands SEPP, provides advertising is permissible only with development consent. The proposal constitutes advertising.

Clause 12 prescribes a range of matters to be considered by a consent authority when determining a development application for development within the Parklands. Section 5 of this SEE covers these matters in detail.

Clause 14 sets out specific requirements for development in or adjoining a nature reserve (within the meaning of the *National Parks and Wildlife Act, 1974*) or an identified environmental conservation area. The proposal does not encroach or adjoin (directly) a nature reserve or an environmental conservation area.

Clause 15 regulates development affecting heritage items. The proposal would not affect any of the heritage items identified by Schedule 1 of the Parklands SEPP.

Clause 16 regulates commercial signage within the Parklands. It does not however apply to signage erected for or on behalf of a public authority. Blacktown City Council is a public authority for the purposes of the Parklands SEPP.

### State Environmental Planning Policy No 55—Remediation of Land

*State Environmental Planning Policy No.55 –Remediation of Land* (SEPP 55) specifies that a consent authority must not consent to the carrying out of development on land unless it has considered whether the land is, or is likely to be contaminated, and if the land is, or is likely to be contaminated, whether the land requires remediation before the land is developed for the proposed use.

The publication *Managing Land Contamination - Planning Guidelines SEPP 55 - Remediation of Land* provides advice on the process of determination as to whether a site is, or is likely to be, contaminated.

In that regard, Section 3.2.1 of the guidelines specifies that:

> *The potential for contamination is often linked to past uses of land and a good early indicator of possible uses is land zoning. Contamination is more likely to have occurred if the land is currently, or was previously, zoned for industrial, agricultural or defence purposes.*

All three sites appear to have previously been used for agricultural purposes. It is not considered that this history affects the suitability of the site for the proposed use. Excavated material would be classified in accordance with Department of Environment, Climate Change and Water guidelines prior to disposal at an appropriately licensed facility.

### Deemed State Environmental Planning Policies

Since 1 July 2009, regional environmental plans (REPs) have not been part of the hierarchy of environmental planning instruments in NSW. All remaining REPs (that were not repealed as part of the reform) are now deemed SEPPs.

There are no deemed SEPPs relevant to the proposal.

## 3.3 Application of Part 4 of the EP&A Act - Confirmation

The proposal is permissible with development consent with operative consent requirements in the Parklands SEPP. The proposed development is therefore appropriately assessed in accordance with the provisions of Part 4 of the EP&A Act and the Regulation.

## 3.4 Other relevant legislation

### Environment Protection and Biodiversity Conservation Act, 1999

The trigger for the approval requirements under the Commonwealth *Environment Protection and Biodiversity Conservation Act 1999* (EPBC Act) is a proposed 'action'. The term 'action' is broadly defined in Part 23 of the EPBC Act and includes a project, development, undertaking, activity or series of activities. An action will require approval if:

- It is likely to have a significant impact on a matter of 'national environmental significance'.
- It is likely to have a significant impact on Commonwealth land, or is undertaken by a Commonwealth agency and is likely to have significant impact on the environment.

Matters of 'national environmental significance' are world heritage properties; national heritage places; Ramsar wetlands; threatened species and communities; migratory species; nuclear actions; and Commonwealth marine areas.

Under the provisions of the EPBC Act, an action that is likely to result in a significant impact on a matter of national environmental significance (NES) or on Commonwealth land must be referred to the Department of Sustainability, Environment, Water, Population and Communities. If the project is subsequently determined to be a controlled action then a requirement for the approval of the Commonwealth Minister for the Environment arises.

It is not expected that significant impacts on Commonwealth matters would occur due to the proposal and thus a referral has not been made.

# 4
# Proposed development

## 4.1 General description

The proposed development at all four sites has the following elements:

- Construction of a new double-sided, single pole advertising structure for the purposes of displaying advertisements.
- Installation of 18.99 m x 4.5 m (85.445 $m^2$) front lit spectacular signage.
- Installation of steel framed maintenance gantry.
- Connection to power.
- Re-turfing and stabilisation of disturbed areas.
- Display of advertisements.

The process of laying sign foundations would first involve the insertion of screw piles using a truck mounted piling rig. This would be followed by the excavation for the foundations using an excavator, installation of concrete reinforcement and the pouring of the concrete foundation. Once set, a steel plinth would be affixed to the foundation. Prefabricated sign components would then erected with the assistance of a mobile crane.

Access for maintenance and the changing of advertising panels would be via public land within Blacktown Olympic Park.

The design drawings for both signs are included at Appendix B.

## 4.2 Design objectives

The design objectives of the proposal are to:

- Ensure the compatibility of the proposed development with the visual character of Blacktown Olympic Park
- Provide effective communication of advertising messages.
- Provide structures with a high quality finish and high standard of design.

# 5

# Section 79C assessment

The heads of consideration pursuant to Section 79C of the EP&A Act comprise:

- any environmental planning instrument;
- any draft environmental planning instrument that is or has been placed on public exhibition and details of which have been notified to the consent authority;
- any development control plan;
- any planning agreement or draft planning agreement under Section 93F of the Act;
- any matters prescribed by the Regulations;
- the likely impacts of the development, including environmental impacts on both the natural and built environments, and the social and economic impacts in the locality;
- the suitability of the site for the development;
- any submissions made in accordance with the Act or the Regulation; and
- the public interest.

## 5.1 Environmental planning instruments

### State Environmental Planning Policy (Western Sydney Parklands) 2009

The matters set out at clause 12 of the Parklands SEPP are considered in Table 5-1 below.

**Table 5-1 Parklands SEPP – Clause 12 matters**

| Matter | Comment |
|---|---|
| Aim of policy | The proposal would not adversely affect the range of activities available to users of the parklands. It would ensure a sustainable revenue stream for direction towards maintenance, improvement and promotion of Blacktown Olympic Park. |
| Impact on drinking water catchments and associated infrastructure | The proposal would not affect a drinking water catchment. |
| Impact on utility services and easements, | The proposal has been designed to as to avoid impacts on utility infrastructure. High-pressure gas, electricity and sewerage infrastructure in the vicinity of the sites would not require adjustment or relocation. |
| Impact of carrying out the development on environmental conservation areas and the natural environment, including endangered ecological communities. | The proposal would not encroach an environmental conservation area as mapped by the Parklands SEPP. Indirect impacts on such areas are also not expected.<br><br>All sites are located within previously cleared areas and would not disturb recognised vegetation communities mapped as part of the Western Sydney Parklands Biodiversity Restoration Strategy (Ecological Australia, 2008). Further, none of the sites encroach areas identified as Core Habitat or Habitat Corridor. |

| Matter | Comment |
|---|---|
| Impact on the continuity of the Western Parklands as a corridor linking core habitat such as the endangered Cumberland Plain Woodland | The proposal would not disrupt Core Habitat, Habitat Corridors or Ecolinks as mapped by the Western Sydney Parklands Biodiversity Restoration Strategy (Ecological Australia, 2008). |
| Impact on the Western Parkland's linked north-south circulation and access network and whether the development will enable access to all parts of the Western Parklands that are available for recreational use, | No impact on north-south circulation. Access to recreational areas is unaffected by the proposal. |
| Impact on the physical and visual continuity of the Western Parklands as a scenic break in the urban fabric of western Sydney, | The proposal does involve the introduction of further urban elements to the Parklands environment. The sites selected are however associated with roads that already traverse this environment (the Westlink M7 and the Great Western Highway). They are not of a scale that would affect the overall 'green corridor' function of the Parklands. |
| Impact on public access to the Western Parklands | No impact on public access. |
| consistency with:<br>(i) any plan of management for the parklands, that includes the Western Parklands, prepared and adopted under Part 4 of the *Western Sydney Parklands Act 2006*, or<br>(ii) any precinct plan for a precinct of the parklands, that includes the Western Parklands, prepared and adopted under that Part, | A draft plan of management has been prepared by the Trust. The proposal is considered generally consistent with the draft plan, in particular the following objectives:<br>• Create venues and spaces that promote sports and active recreation<br>• Develop new business opportunities to support the management and further development of the Parklands<br>The Trust has divided the Parklands into precincts. All four sites are located within Precinct 2 – Eastern Road Sports. The proposal would assist in achieving the following precinct objective:<br>• Continue to develop the precinct as a regional and high quality sport and recreation destination. |
| Impact on surrounding residential amenity. | Site 3 and Site 4 are not proximate to residential areas. Site 1 and Site 2 are not likely to be visible from residential areas to the west of the M7. |
| Impact on significant views, | The proposal would result in the introduction of new visual features to the Blacktown Olympic Park environment. The locations selected would not affect significant views or vistas. See the photomontages included at Appendix C. |
| Effect on drainage patterns, ground water, flood patterns and wetland viability | No impact. |
| Impact on heritage items | No impact on known heritage items |
| Impact on traffic and parking | No impact. |

## Transport Corridor Outdoor Advertising and Signage Guidelines

As noted in Section 3.2, SEPP 64 does not apply to the proposal. However, as advertising and signage guidelines are not yet available for the Parklands, it is considered appropriate that, in the interim, the proposal be considered against the Transport Corridor Outdoor Advertising and Signage Guidelines (the Guidelines), which form part of the SEPP 64 assessment framework.

*Land use compatibility*

The Guidelines prescribe a set of land use compatibility criteria, which assist a preliminary assessment of the suitability of an advertising proposal in the context of surrounding land uses. The criteria are considered in Table 5-2 below:

### Table 5-2 Land use compatibility criteria

| Criterion | Comment |
|---|---|
| Outdoor advertising should not be inconsistent with the land use objectives outlined in the relevant environmental plan. | See Table 5-1. |
| Advertisements not to be placed on land where signage is visible from the following areas if it is likely to significantly impact on amenity of those areas.<br>Environmentally sensitive area<br>Heritage area<br>Natural or conservation area<br>Open space<br>Waterway<br>Residential area<br>Scenic protection area<br>National park or nature reserve | The proposal would be visible from within the Parklands (regional open space) and the recreational areas of Blacktown Olympic Park. It would not however significantly affect the amenity of these areas given the location and orientation towards adjacent roads.<br>Visibility from environmental conservation areas mapped by the Parklands SEPP (the nearest being immediately to the north of the railway line) would be limited. |
| Advertising structures should not be located so as to located so as to dominate or protrude significantly above the skyline or obscure or compromise significant scenic views or views that add to the character of the area. | When viewed from vantage points within Blacktown Olympic Park and the adjacent M7 Motorway corridor, encroachment of the skyline would be evident. This is attributable to a number of factors:<br>- The height of the sign structures and their elevated position. The structures at Site 1 and Site 2 are located in an elevated position atop motorway cut embankments.<br>- The open, undeveloped nature of the area. The minimal urban form, and relatively flat topography, affords few opportunities to minimise skyline encroachment.<br>Skyline encroachment would be most pronounced where the viewer is at a lower elevation than the object being viewed (ie directly below the sign). At Site 1 and Site 2 this would primarily be users of the M7 Motorway and associated cycleway.<br>The proposed advertising at all locations would not detract from significant views. |
| Advertising structures should not be located so as to diminish the heritage values of items or areas of local, | Heritage items or areas would not be adversely affected by the proposal. |

| Criterion | Comment |
|---|---|
| regional or State heritage significance. | |
| Advertising structures should be placed in the context of other built structures in preference to non-built areas. Signage should be used to enhance the visual landscape where possible (eg through the screening of unsightly aspects of a landscape). | Opportunities to place advertising signs in the context of other built structures (within Blacktown Olympic Park) are limited.<br><br>Opportunities to use the proposal to screen unsightly aspects of the landscape are limited. |

*Design assessment criteria*

Section 2 of the Guidelines outlines design assessment criteria for advertising in transport corridors. The criteria are divided into three categories: macro-scale planning principles; sign clutter controls; and site-specific and structural criteria. Each of these categories is considered separately below.

The macro-scale planning principle relevant to the proposed development deals with sign placement in transport corridors in urban areas. The principle states that advertisement proposals will only be considered along roads where overpasses or bridges are required for traffic or pedestrian safety or where (1) the proposal is within a corridor passing through appropriate zones (i.e. enterprise, business development, mixed use or industrial) or (2) the proposal is within a corridor passing through other urban areas identified by council as appropriate for such advertising. The proposal is within Blacktown Olympic Park, but more directly addresses the Westlink M7 and the Main Western Railway Line corridor. While it would have some visual impact, the proposal is considered justifiable given the limited visual interface high scenic value elements of the Parklands.

Sign clutter control is a principle concerned with minimising the visual and safety impacts associated with sign clutter. It is also concerned with preservation of the viewing rights of adjacent advertisers. As the Guidelines note, what constitutes 'clutter' will depend on the location. . In the context of the subject site, there would be no clutter associated with the proposed signs sign due to the minimal other signage along relevant sightlines.

Site-specific and structural criteria relevant to the proposal are addressed in Table 5-3 below.

### Table 5-3 Site specific and structural criteria

| Criterion | Comment |
|---|---|
| **General criteria** | |
| Compatibility with scale, proportion and other characteristics of the site. | The proposal at all sites is considered of suitable size and proportion to accommodate the advertising, minimising impacts on the visual character of the broader area. Advertising is likely to be an expected visual element at a sporting venue such as Blacktown Olympic Park. |
| Compatibility with important features on the site. | The proposed structure (and the advertising use) is considered compatible with the general features of the adjacent road and rail environments. Advertising is likely to be an expected visual element at a sporting venue such as Blacktown Olympic Park. |
| Demonstrated design excellence and innovation in terms of relationship to the site. | The structure proposed for the site has been designed to meet the objectives outlined in Section 4.2. |
| Avoids the removal of significant | The proposal minimises the removal of vegetation. At Site 4 some tree |

| Criterion | Comment |
|---|---|
| vegetation. | removal/trimming is likely to be required to allow installation of the sign structure. |
| Landscaping that complements the advertising and is in keeping with the landscape character of the transport corridor. | Minimal additional landscaping is proposed. Disturbed areas would be re-instated with turf or other appropriate plantings. |
| Details of any safety devices, platforms, lighting devices or logos designed as an integral part of the signage or structure on which it is to be displayed. | The detailed design would aim to appropriately integrate any associated devices and logos. |
| Illumination must not result in unacceptable glare or reduce road safety for pedestrians, vehicles or aircraft. | The proposed development would comply with the luminance rules specified at Section 3.2.5 of the Guidelines.<br>Light sources would not be visible to passing motorists and would not be greater than that of a 65W incandescent bulb.<br>Reflectance would not exceed the 'Minimum coefficients of Luminous intensity per unit area for Class 2A Material' – AS/NZS 1906.1:1993 |
| Illumination must not cause light spillage, into nearby residential properties, national parks or nature reserves. | Residential properties would not be directly exposed to the proposed development and there are no national parks or nature reserves in close proximity.<br>Light spillage would be minimal from all signs (which are to be illuminated from the top of the structure). |
| Must be consistent with road safety criteria. | See Table 5-4 |
| **Free standing advertisement criteria** | |
| Advertising structure must not protrude above the dominant skyline when viewed from ground level | There would be some protrusion above the skyline from some vantage points. See discussion at Table 5-2. |
| For freestanding advertisements greater than 45 square metres to be determined by council. DCP prepared on the basis of an advertising design analysis must be in place | The proposed signs have a display area of greater than 45 square metres. They are not however subject to determination by the local council. |
| For freestanding advertisements where the Minister for planning is the consent authority a landscape management plan may be required. Measures may include provision of appropriate vegetation behind and adjacent to the advertising structure to minimise unintended visual impacts. | Potential requirement noted.<br>The specifics of landscaping measures will be considered as part of the continuing design process. |

*Road safety assessment criteria*

The Guidelines outline traffic, bicycle and pedestrian safety assessment criteria that are intended to apply to the design and assessment of all advertising proposals on or within the vicinity of a classified road. The road safety assessment criteria are considered in Table 5-4 below:

### Table 5-4 Road safety assessment critieria

| Criterion | Comment |
|---|---|
| Must not obstruct driver view of road, other vehicles, bicycle riders or pedestrians at crossings. | The elevated and offset position of the proposed advertising signs means they would not obstruct driver view of the road, other vehicles, bicycle riders. |
| Must not obstruct a pedestrian or cyclist's view of the road. | In relation to Site 1 and Site 2 it can be noted that cyclists use the road shoulder at the sign locations as well as the dedicated M7 Cycleway. Their view of the road would not be obstructed as a result of the installation of the proposal. Similarly the offset position of the sign proposed for Site 3 would not views for pedestrians and cyclists. |
| Placement of a sign should not distract a driver at a critical time. They should not obstruct driver view to a:<br>- Road hazard<br>- Intersection<br>- Traffic control device<br>- Emergency vehicle access point | It is not expected that the proposal would be considered a traffic hazard within the meaning of the *Roads Act 1993*. No traffic hazards were identified in the vicinity of the subject site and so it is not expected that views to a traffic hazard would be obscured.<br>It is noted that the proposed sign at Site 3 is proximate to a set of traffic signals. It is expected the views of the Roads and Traffic Authority would be sought in relation to this position (and that of the proposed signs at Site 1 and Site 2) as part of the development assessment process.<br>The proposal would not obscure driver views to any traffic control device. The position of all signs ensures that traffic control devices, road-related signage and the like appears in the viewers foreground.<br>Views to any access point would not be obstructed by the proposal.<br>There are no apparent emergency vehicle access points located in the immediate vicinity of the site. |
| Advertisements must not distract a driver from or reduce visibility of directional signs, traffic signals or other traffic control devices. | The photographs at Appendix A show the relationship to existing signage.<br>The position of all signs ensures that traffic control devices, road-related signage and the like appears in the viewers foreground.<br>It is expected the views of the Roads and Traffic Authority would be sought in relation the position of the proposed signs as part of the development assessment process. |
| Advertisements should not be located in a position that has the potential to give incorrect information on the alignment of a road. | The proposed sign is not of a scale or type, and would not be in such a position so as to give incorrect information about the alignment of a road.<br>It is expected the views of the Roads and Traffic Authority would be sought in relation the position of the proposed signs as part of the development assessment process. |

| | |
|---|---|
| Sign should not be located less than the safe sight distance from an intersection, merge point, exit ramp, traffic control signal or sharp curve.<br><br>Sign should not be located less than the safe stopping distance from a marked foot crossing, pedestrian crossing, pedestrian refuge, cycle crossing, cycleway facility or hazard.<br><br>Sign should not be visible from the stem of a T-intersection. | It is expected the views of the Roads and Traffic Authority would be sought in relation the position of the proposed signs as part of the development assessment process.<br><br>The proposed development is not expected to represent a hazard to cyclists.<br><br>The proposed sign at Site 3 would be adjacent to the stem of a T-intersection (signalised). It would not be in the line of sight of drivers entering the intersection from the stem. |
| The advertisement must not interfere with the stopping sight distance for the road's design speed or the effectiveness of a traffic control device. | The signs would not imitate a traffic control device and would be passive in the sense that they would not employ potentially distracting mechanisms such as flashing lights.<br><br>The stopping sight distance for the design speed of the road would be maintained. |
| The advertisement should not distract a driver's attention away from the road environment for an extended length of time.<br><br>Drivers should be able to see the road and the main components of the traffic stream (in peripheral view) when viewing the sign. The driver should not have to turn their head from the traffic stream to view the sign.<br><br>The sign should be oriented in a manner that minimises headlight reflections in the driver's line of sight. | The proposed sign locations are such that a driver would not have cause to turn their head to view the sign. A driver's view of the road and the main components of the traffic stream would be maintained when viewing the advertisements<br><br>Undue headlight reflections to the driver line of sight are not expected due to the elevation of the proposed signs and the material to be used.<br><br>Reflectance would not exceed the 'Minimum coefficients of Luminous intensity per unit area for Class 2A Material' – AS/NZS 1906.1:1993 |
| The advertisement must not create a physical obstruction or hazard. | The proposed development would not obstruct users of the road corridor. |
| Where the sign supports are not frangible the sign must be placed outside the clear-zone as defined in Section 3.7 of the RTA Road Design Guide. | All sign supports would be located outside the clear zone. |
| Signs that are permitted to hang over roads or footpaths should meet wind loading requirements as specified AS 1170.1 and AS 1170.2. | The proposed development would meet wind loading requirements as specified AS 1170.1 and AS 1170.2. |
| Signs located on footpaths or nature strips must be positioned so that an absolute minimum envelope of 900mm x 2000m of unobstructed clear path of travel is maintained for the entire length of the advertising structure | Not relevant. |

*Illumination and reflectance*

Issues associated with illumination and reflectance are addressed in Table 5-3.

*Sign content*

Sign content would be periodically altered. All sign content would comply with the road safety guidelines for sign content set out at Section 3.4 of the Guidelines.

*Public benefit test*

The proposal would represent an important revenue source for the continuing maintenance, improvement and promotion of Blacktown Olympic Park.

## 5.2 Draft environmental planning instruments

There are no draft environmental planning instruments relevant to the proposed development.

## 5.3 Development control plans

*Blacktown Development Control Plan 2006* (Blacktown DCP) applies across the Blacktown LGA.

Parts B to J provide specific information for those wishing to carry out development on land zoned rural, residential, business, industrial and open space, or in the Huntingwood Industrial Estate, specific new release areas and other relevant sites respectively throughout the City of Blacktown. Parts J, L and M also provide site specific guidelines for development within defined areas in Stanhope Gardens, Colebee Release Area and Second Ponds Creek. Part K sets out the criteria for notifying potentially affected persons of development proposals.

Part N provides guidelines for the location and siting of telecommunications facilities and Part O provides guidelines designed to give a consistent approach to the minimisation of waste generation and overall environmental effects of waste. Parts P to R provide guidelines on the control of landfill, contaminated land and soil erosion and sediment control.

The Blacktown DCP does not contain specific provisions with respect to advertising proposals.

With respect to the waste management provisions at Part O of the Blacktown DCP is may be noted that the proposal would generate minimal waste. Any waste materials would be removed from site and disposed of at an appropriately licensed facility.

With respect to the soil erosion and sediment control provisions at Part R of the Blacktown DCP, it is noted that disturbed material must be contained on site. The proposal would include measures to ensure the stabilisation of disturbed areas as soon as practicable.

## 5.4 Planning agreements

There are no planning agreements or draft planning agreements under Section 93F of the EP&A Act that are relevant to the proposal.

## 5.5 Matters prescribed by the Regulations

The matters prescribed by Clause 92 of the *Environmental Planning and Assessment Regulation, 2000* are not applicable to the proposal.

## 5.6 Impacts of the proposed development

Impacts associated with the proposal have been largely addressed in Sections 5.1, 5.2 and 5.3. Further brief comment is provided below.

*Water quality*

No impact. The proposed works at both sites involve no disturbance of land.

*Noise*

Negligible impact. Noise levels in the area would increase for periods during sign installation as a result of the general use of machinery. Having regard to background noise levels and the distance to receivers, any impacts are not expected to be significant.

There are not expected to be any operational noise impacts associated with the implementation of the proposal.

*Air quality*

Negligible impact.

*Solar access*

No issues of solar access are expected to arise from the implementation of the proposal.

## 5.7 Suitability of the site

The suitability of the site has been largely addressed in Sections 5.1, 5.2 and 5.3. The site is considered appropriate in terms of relevant visual and road safety considerations.

The proposal would not result in an incompatible relationship with adjoining land uses and is considered appropriate in terms of siting, orientation and design features.

No natural/physical constraints to the proposal have been identified.

## 5.8 Public submissions

The Parklands SEPP does not prescribe specific notification requirements. If the DA is to be advertised, the applicant will assist in addressing any issues raised in submissions.

## 5.9 The public interest

The public interest is generally served in circumstances where development, including advertising, can be provided in a form that is generally consistent with the nature of existing or contemplated development under relevant planning controls, and without imposing any significant or unreasonable impacts on the amenity of surrounding land. It is also served where such development provides an ancillary public benefit.

In this instance, the proposed advertising and associated structures would not impose any significant or unreasonable impacts on the amenity of Blacktown Olympic Park, surrounding land or the locality more generally. Further, revenue from advertising would be solely directed towards continuing maintenance, improvement and promotion of Blacktown Olympic Park. In this context it represents a public benefit.

Accordingly, the proposed advertising is considered a form of development that generally serves the public interest.

# 6
# Conclusion

The proposal would have some impact on local views and there may be minor impacts during installation.

However, it has been assessed as generally consistent with the aims of the Parklands SEPP and other relevant guidelines.

The proposal would also deliver a public benefit with revenue to be directed towards continuing maintenance, improvement and promotion of Blacktown Olympic Park.

In this context, the benefits of the proposal are considered to outweigh any negative impacts

# Appendices

# Appendix A
# Photographs

View west along Eastern Road

View south-east towards Site 1 and Site 2

View north towards Site 2

M7 Motorway reserve

View south along the M7 Motorway towards Eastern Road

View east along Eastern Road

View east to Site 4

View west to Site 4

# Appendix B
# Design drawings

# BLACKTOWN OLYMPIC PARK SIGNAGE

## M7 MOTORWAY AND EASTERN ROAD
## ROOTY HILL

| | |
|---|---|
| SDA00 | LOCATION PLAN |
| SDA01 | SIGNAGE LOCATION 1 |
| SDA02 | SIGNAGE LOCATION 2 |
| SDA03 | SIGNAGE LOCATION 3 |
| SDA04 | SIGNAGE LOCATION 4 |

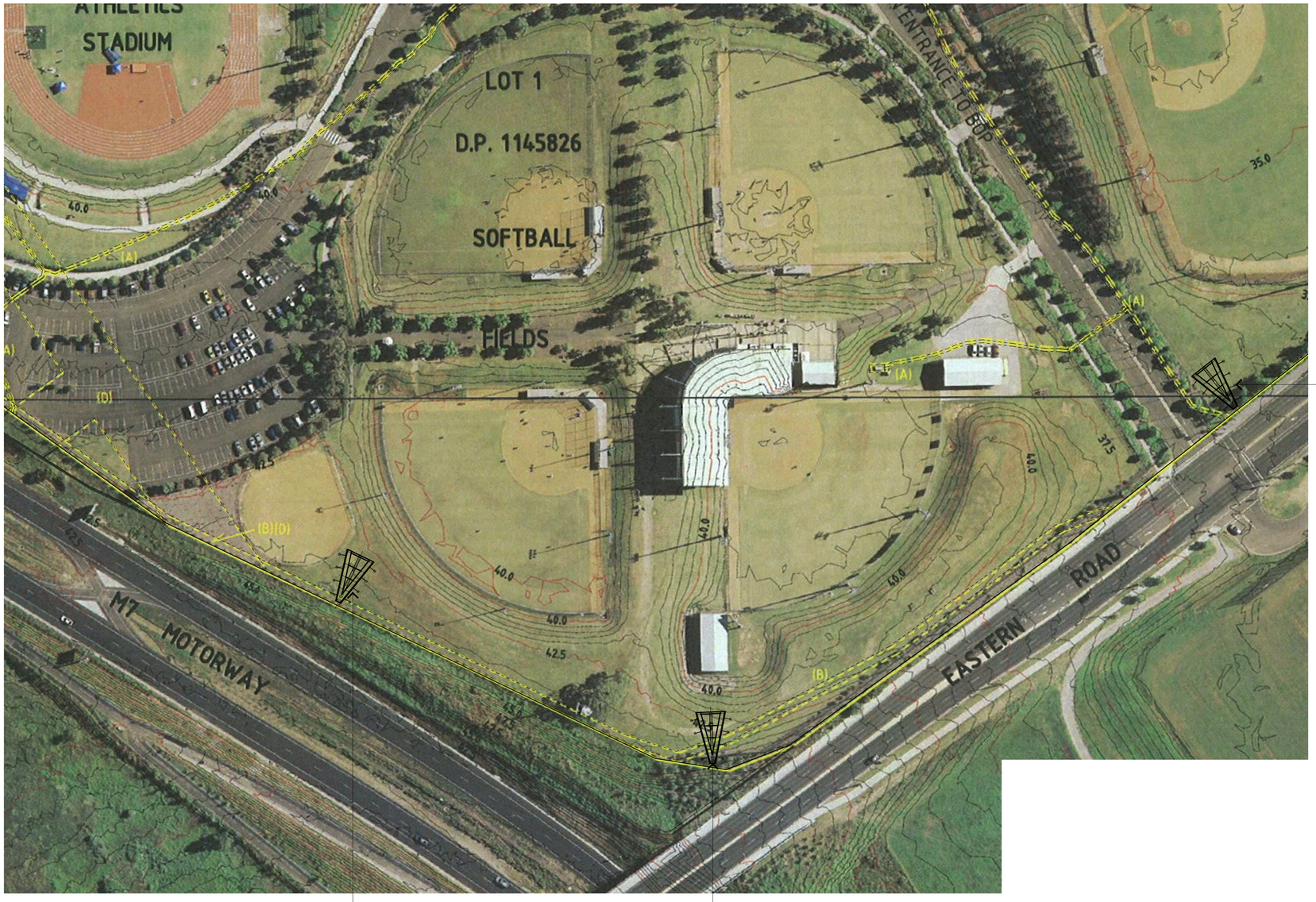


© Copyright DesignInc Sydney Pty Limited
This drawing is protected by copyright. All rights are reserved. Unless permitted under the Copyright Act 1968, no part of this drawing may in any form or by any means be reproduced, published, broadcast or transmitted without the prior written permission of the copyright owner.

**Please note**

If the Status of this drawing is not signed off For Construction it may be subject to change, alteration or amendment at the discretion of DesignInc Sydney Pty Limited. If so, DesignInc Sydney Pty Limited is not liable for any loss, damage, harm or injury whether special, consequential, direct or indirect, suffered by you or any other person as a result of your use of this drawing for construction purposes.

Figured dimensions take preference to scale readings. Verify all dimensions on site. Report any discrepancies to the Architect for decision before proceeding with the work.

| Nº. | DATE | REVISIONS | BY |
|---|---|---|---|
| A | 02.09.10 | FOR DA | JR |

LANDSCAPE ARCHITECT

ELECTRICAL CONSULTANT

CIVIL CONSULTANT

BCA CONSULTANT

MECHANICAL CONSULTANT

HYDRAULIC CONSULTANT

STRUCTURAL CONSULTANT

ARCHITECT

DesignInc

DesignInc Sydney PTY LIMITED ACN 003008820
77 PACIFIC HIGHWAY NORTH SYDNEY
NEW SOUTH WALES 2060 AUSTRALIA
TELEPHONE +612 8905 7100 FACSIMILE +612 8905 7199
www.designinc.com.au EMAIL sydney@designinc.com.au
NOMINATED ARCHITECTS:
Ghislain Coulon 4669 . Anthony Quan 5421 . Sandeep Amin 7337

Architecture Urban Design Interiors

DESIGN & CONSTRUCT CONTRACTOR

PROJECT
**BLACKTOWN OLYMPIC PARK SIGNAGE DEVELOPMENT**
EASTERN RD, ROOTY HILL

TITLE
**PROPOSED SIGNAGE LOCATION PLAN**

| DRAWING STATUS | REVIEWED BY | SIGNATURE | DATE |
|---|---|---|---|
| PRELIMINARY | | | |
| FOR INFORMATION ONLY | | | |
| FOR D.A. APPROVAL | | | |
| FOR CONSTRUCTION CERTIFICATE | | | |
| FOR TENDER | | | |
| FOR CONSTRUCTION | | | |
| AS BUILT DOCUMENT | | | |

N

| | |
|---|---|
| DRAWN BY | JR |
| SCALES | AS SHOWN |
| PLOT DATE: | 02.09.10 |
| JOB Nº. | 281200 |
| DRAW'G/REV'N Nº. | SDA00/RevA |

QUALITY CERTIFIED ISO 9001

Completion of the Drawing Status is evidence the design has been verified as conforming to the requirements of the Project M.S. Plan. Initialling the 'Drawn By' box confirms that this drawing has been prepared in conformity with DesignInc Sydney M.S. procedures.

**DEVELOPMENT APPLICATION**

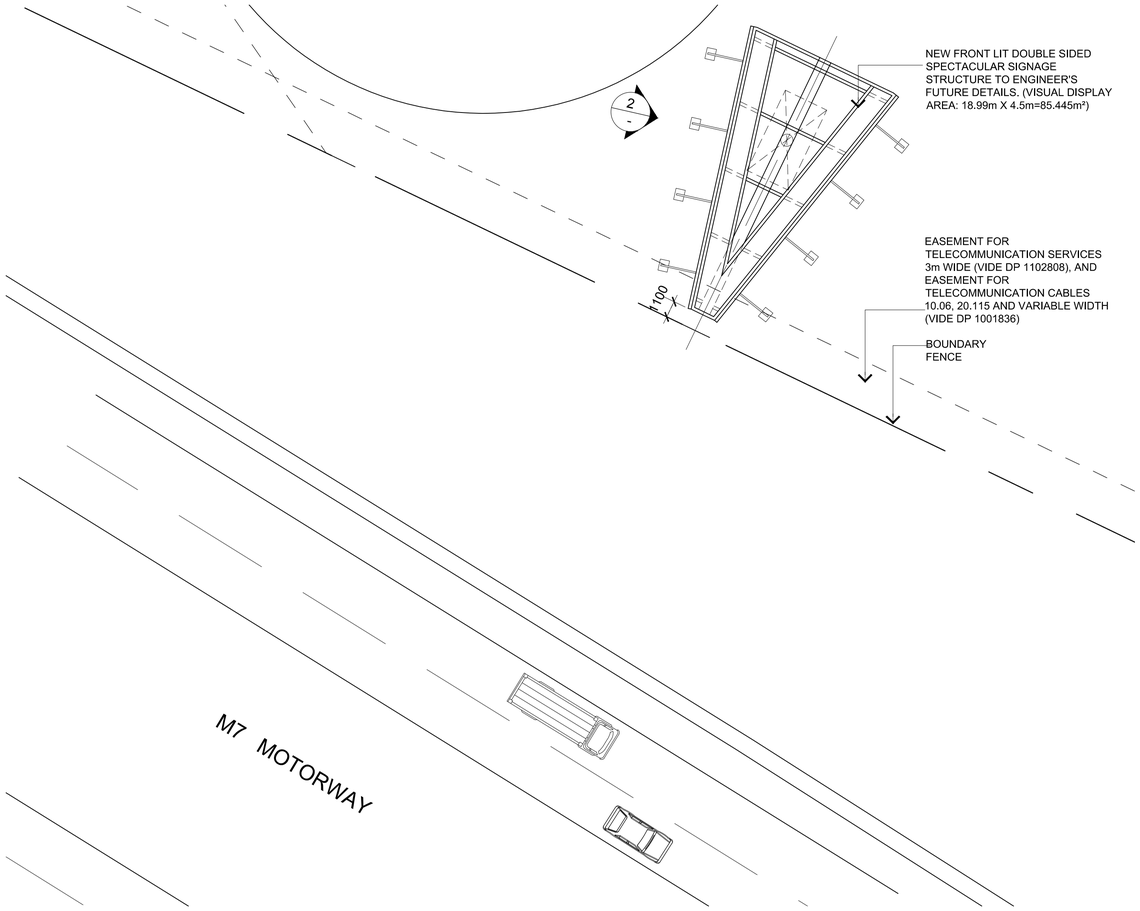


1 PLAN OF SIGNAGE

1 : 200 @ A1

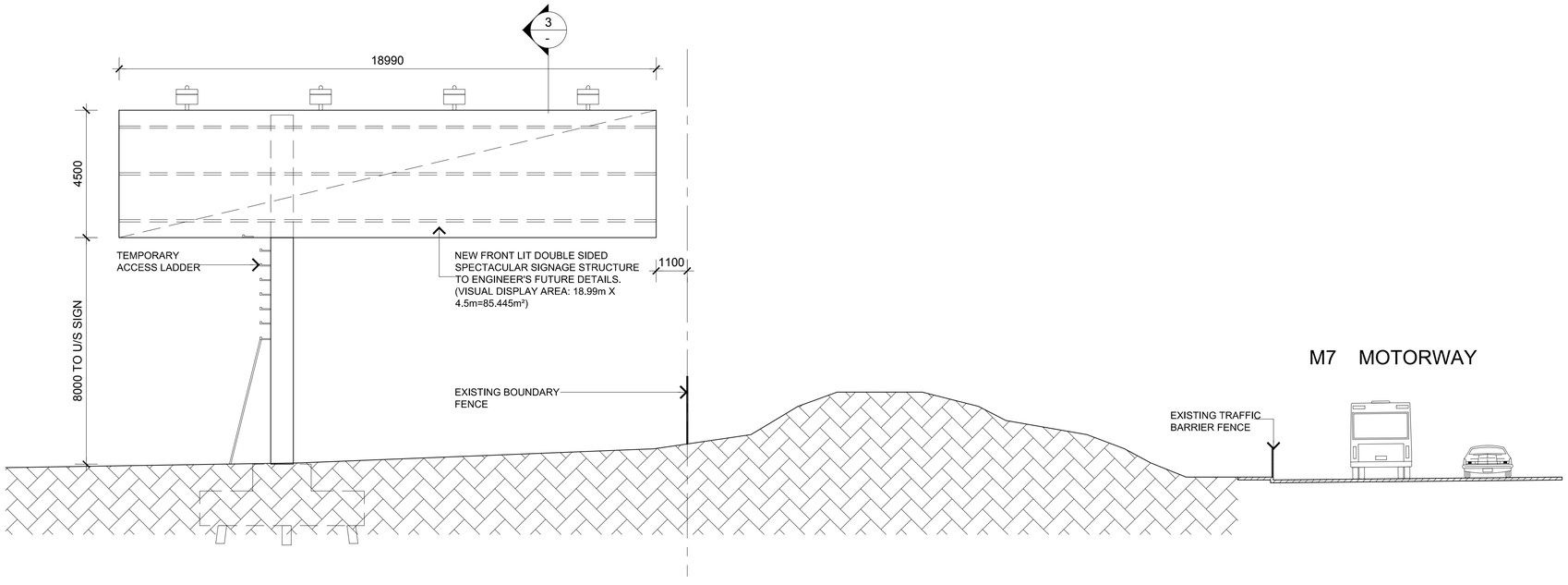


2 ELEVATION

1 : 100 @ A1

0 1 2 3 4 5m

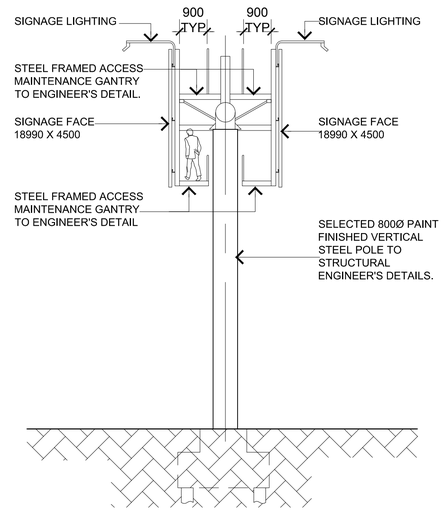


3 SECTION

1 : 100 @ A1

© Copyright DesignInc Sydney Pty Limited

This drawing is protected by copyright. All rights are reserved. Unless permitted under the Copyright Act 1968, no part of this drawing may in any form or by any means be reproduced, published, broadcast or transmitted without the prior written permission of the copyright owner.

**Please note**

If the Status of this drawing is not signed off For Construction it may be subject to change, alteration or amendment at the discretion of DesignInc Sydney Pty Limited. If so, DesignInc Sydney Pty Limited is not liable for any loss, damage, harm or injury whether special, consequential, direct or indirect, suffered by you or any other person as a result of your use of this drawing for construction purposes.

Figured dimensions take preference to scale readings. Verify all dimensions on site. Report any discrepancies to the Architect for decision before proceeding with the work.

| Nº. | DATE | REVISIONS | BY |
|---|---|---|---|
| A | 02.09.10 | FOR DA | JR |

LANDSCAPE ARCHITECT

ELECTRICAL CONSULTANT

CIVIL CONSULTANT

BCA CONSULTANT

MECHANICAL CONSULTANT

HYDRAULIC CONSULTANT

STRUCTURAL CONSULTANT

ARCHITECT

DesignInc

DesignInc Sydney PTY LIMITED ACN 003008820
77 PACIFIC HIGHWAY NORTH SYDNEY
NEW SOUTH WALES 2060 AUSTRALIA
TELEPHONE +612 8905 7100 FACSIMILE +612 8905 7199
www.designinc.com.au EMAIL sydney@designinc.com.au

NOMINATED ARCHITECTS:
Ghislain Coulon 4669 , Anthony Quan 5421 , Sandeep Amin 7337

Architecture Urban Design Interiors

DESIGN & CONSTRUCT CONTRACTOR

PROJECT **BLACKTOWN OLYMPIC PARK SIGNAGE DEVELOPMENT**
EASTERN RD, ROOTY HILL

TITLE **SIGNAGE 1 M7 MOTOR WAY**

| DRAWING STATUS | REVIEWED BY | SIGNATURE | DATE |
|---|---|---|---|
| PRELIMINARY | | | |
| FOR INFORMATION ONLY | | | |
| FOR D.A. APPROVAL | | | |
| FOR CONSTRUCTION CERTIFICATE | | | |
| FOR TENDER | | | |
| FOR CONSTRUCTION | | | |
| AS BUILT DOCUMENT | | | |

N

DRAWN BY: JR
SCALES: AS SHOWN
PLOT DATE: 30.08.10

JOB Nº. 281200

DRAW'G/REV'N Nº. SDA01/RevA

QUALITY CERTIFIED ISO 9001

Completion of the Drawing Status is evidence the design has been verified as conforming to the requirements of the Project M.S. Plan. Initialling the 'Drawn By' box confirms that this drawing has been prepared in conformity with Designinc Sydney M.S. procedures.

**DEVELOPMENT APPLICATION**

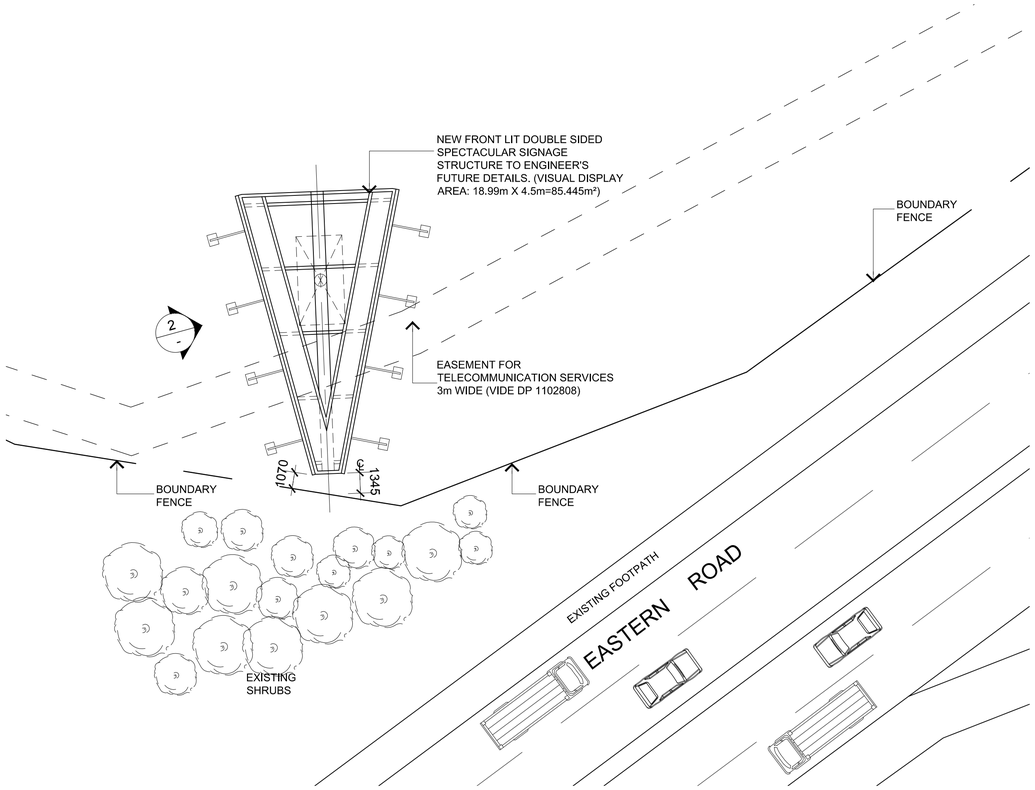


1 PLAN OF SIGNAGE

1 : 200 @ A1

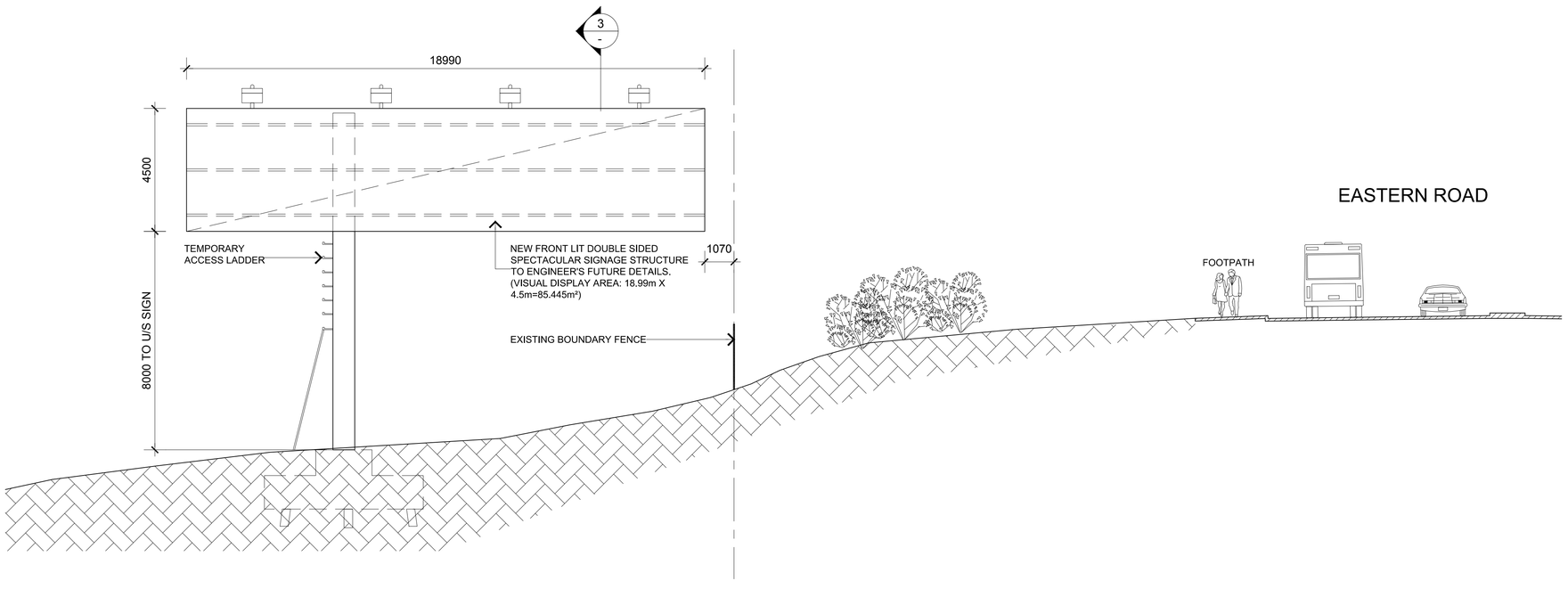


2 ELEVATION

1 : 100 @ A1

0 1 2 3 4 5m

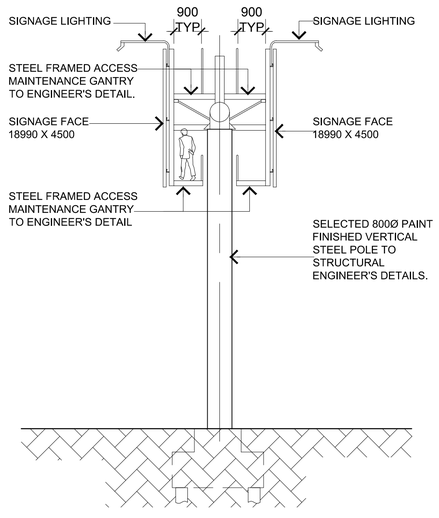


3 SECTION

1 : 100 @ A1

© Copyright DesignInc Sydney Pty Limited

This drawing is protected by copyright. All rights are reserved. Unless permitted under the Copyright Act 1968, no part of this drawing may in any form or by any means be reproduced, published, broadcast or transmitted without the prior written permission of the copyright owner.

**Please note**

If the Status of this drawing is not signed off For Construction it may be subject to change, alteration or amendment at the discretion of DesignInc Sydney Pty Limited. If so, DesignInc Sydney Pty Limited is not liable for any loss, damage, harm or injury whether special, consequential, direct or indirect, suffered by you or any other person as a result of your use of this drawing for construction purposes.

Figured dimensions take preference to scale readings. Verify all dimensions on site. Report any discrepancies to the Architect for decision before proceeding with the work.

| Nº. | DATE | REVISIONS | BY |
|---|---|---|---|
| A | 02.09.10 | FOR DA | JR |

LANDSCAPE ARCHITECT

ELECTRICAL CONSULTANT

CIVIL CONSULTANT

BCA CONSULTANT

MECHANICAL CONSULTANT

HYDRAULIC CONSULTANT

STRUCTURAL CONSULTANT

ARCHITECT

DesignInc

DesignInc Sydney PTY LIMITED ACN 003008820
77 PACIFIC HIGHWAY NORTH SYDNEY
NEW SOUTH WALES 2060 AUSTRALIA
TELEPHONE +612 8905 7100 FACSIMILE +612 8905 7199
www.designinc.com.au EMAIL sydney@designinc.com.au
NOMINATED ARCHITECTS:
Ghislain Coulon 4669 . Anthony Quan 5421 . Sandeep Amin 7337

Architecture Urban Design Interiors

DESIGN & CONSTRUCT CONTRACTOR

PROJECT

**BLACKTOWN OLYMPIC PARK SIGNAGE DEVELOPMENT**

EASTERN RD, ROOTY HILL

TITLE

**SIGNAGE 2 CORNER OF EASTERN ROAD AND M7 MOTORWAY**

| DRAWING STATUS | REVIEWED BY | SIGNATURE | DATE |
|---|---|---|---|
| PRELIMINARY | | | |
| FOR INFORMATION ONLY | | | |
| FOR D.A. APPROVAL | | | |
| FOR CONSTRUCTION CERTIFICATE | | | |
| FOR TENDER | | | |
| FOR CONSTRUCTION | | | |
| AS BUILT DOCUMENT | | | |

N

DRAWN BY: JR

SCALES: AS SHOWN

PLOT DATE: 02.09.10

JOB Nº. 281200

DRAW'G/REV'N Nº. SDA02/RevA

QUALITY CERTIFIED ISO 9001

Completion of the Drawing Status is evidence the design has been verified as conforming to the requirements of the Project M.S. Plan. Initialling the "Drawn By" box confirms that this drawing has been prepared in conformity with DesignInc Sydney M.S. procedures.

**DEVELOPMENT APPLICATION**

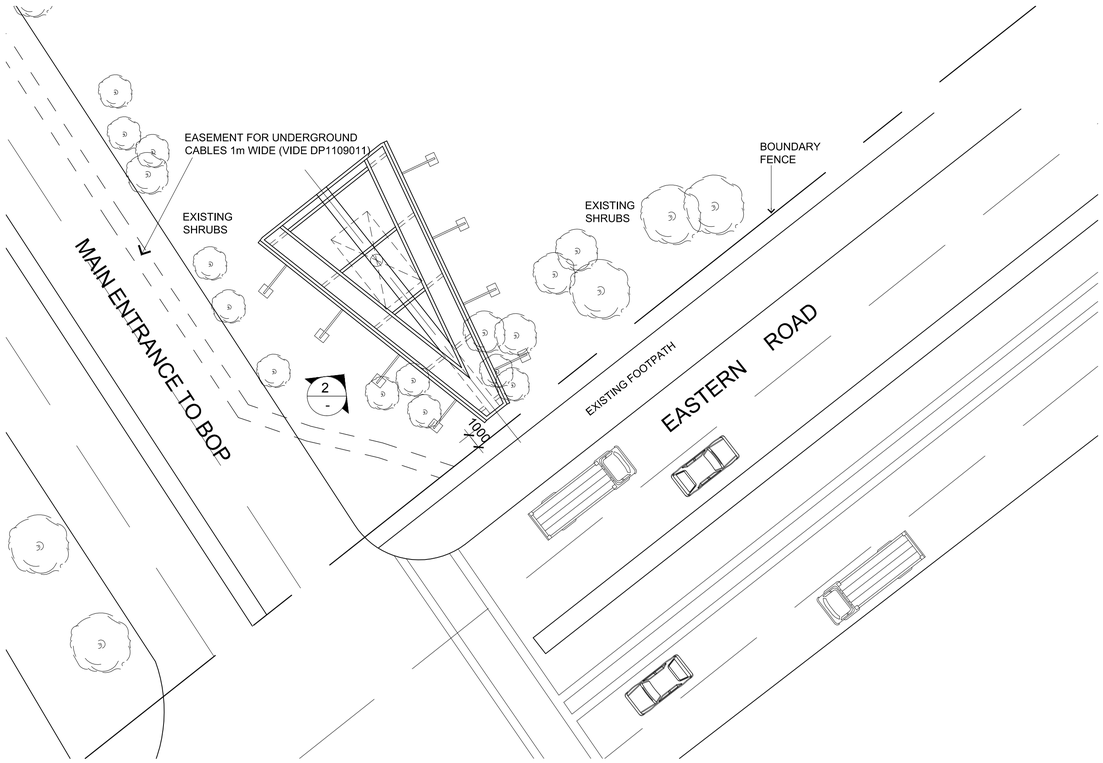


1 PLAN OF SIGNAGE

1 : 200 @ A1

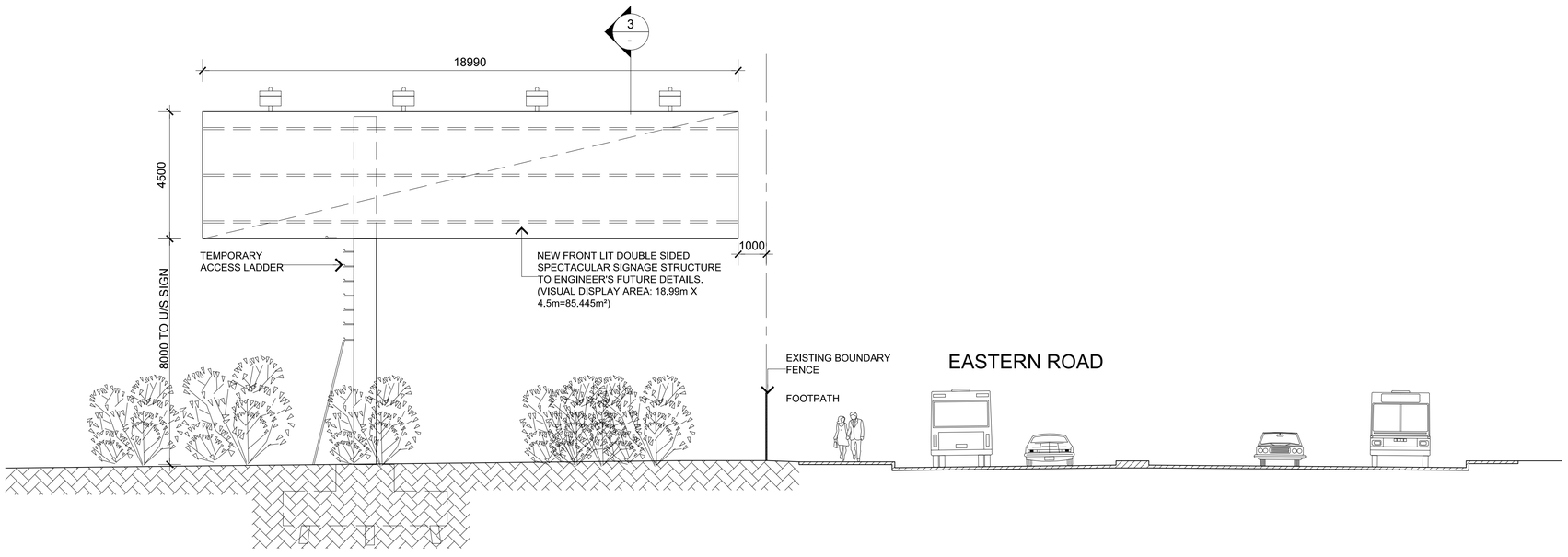


2 ELEVATION

1 : 100 @ A1

0 1 2 3 4 5m

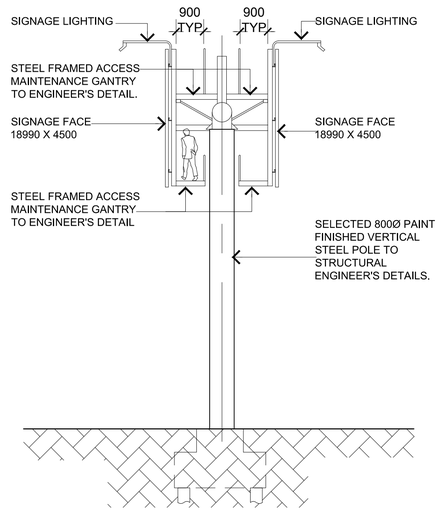


3 SECTION

1 : 100 @ A1

© Copyright DesignInc Sydney Pty Limited

This drawing is protected by copyright. All rights are reserved. Unless permitted under the Copyright Act 1968, no part of this drawing may in any form or by any means be reproduced, published, broadcast or transmitted without the prior written permission of the copyright owner.

**Please note**

If the Status of this drawing is not signed off For Construction it may be subject to change, alteration or amendment at the discretion of DesignInc Sydney Pty Limited. If so, DesignInc Sydney Pty Limited is not liable for any loss, damage, harm or injury whether special, consequential, direct or indirect, suffered by you or any other person as a result of your use of this drawing for construction purposes.

Figured dimensions take preference to scale readings. Verify all dimensions on site. Report any discrepancies to the Architect for decision before proceeding with the work.

| Nº. | DATE | REVISIONS | BY |
|---|---|---|---|
| A | 02.09.10 | FOR DA | JR |

LANDSCAPE ARCHITECT

ELECTRICAL CONSULTANT

CIVIL CONSULTANT

BCA CONSULTANT

MECHANICAL CONSULTANT

HYDRAULIC CONSULTANT

STRUCTURAL CONSULTANT

ARCHITECT

DesignInc

**DesignInc Sydney** PTY LIMITED ACN 003008820
77 PACIFIC HIGHWAY NORTH SYDNEY
NEW SOUTH WALES 2060 AUSTRALIA
TELEPHONE +612 8905 7100 FACSIMILE +612 8905 7199
www.designinc.com.au EMAIL sydney@designinc.com.au
NOMINATED ARCHITECTS:
Ghislain Coulon 4669 . Anthony Quan 5421 . Sandeep Arnin 7337

**Architecture Urban Design Interiors**

DESIGN & CONSTRUCT CONTRACTOR

PROJECT

**BLACKTOWN OLYMPIC PARK SIGNAGE DEVELOPMENT**

EASTERN RD, ROOTY HILL

TITLE

**SIGNAGE 3**
**CORNER OF EASTERN ROAD AND MAIN ENTRANCE TO BOP**

| DRAWING STATUS | REVIEWED BY | SIGNATURE | DATE |
|---|---|---|---|
| PRELIMINARY | | | |
| FOR INFORMATION ONLY | | | |
| FOR D.A. APPROVAL | | | |
| FOR CONSTRUCTION CERTIFICATE | | | |
| FOR TENDER | | | |
| FOR CONSTRUCTION | | | |
| AS BUILT DOCUMENT | | | |

N

DRAWN BY: JR

SCALES: AS SHOWN

PLOT DATE: 02.09.10

JOB Nº. 281200

DRAW'G/REV'N Nº. SDA03/RevA

QUALITY CERTIFIED ISO 9001

Completion of the Drawing Status is evidence the design has been verified as conforming to the requirements of the Project M.S. Plan. Initialling the 'Drawn By' box confirms that this drawing has been prepared in conformity with DesignInc Sydney M.S. procedures.

**DEVELOPMENT APPLICATION**

© Copyright DesignInc Sydney Pty Limited
This drawing is protected by copyright. All rights are reserved. Unless permitted under the Copyright Act 1968, no part of this drawing may in any form or by any means be reproduced, published, broadcast or transmitted without the prior written permission of the copyright owner.

**Please note**

If the Status of this drawing is not signed off For Construction it may be subject to change, alteration or amendment at the discretion of DesignInc Sydney Pty Limited. If so, DesignInc Sydney Pty Limited is not liable for any loss, damage, harm or injury whether special, consequential, direct or indirect, suffered by you or any other person as a result of your use of this drawing for construction purposes.

Figured dimensions take preference to scale readings. Verify all dimensions on site. Report any discrepancies to the Architect for decision before proceeding with the work.

| Nº. | DATE | REVISIONS | BY |
|---|---|---|---|
| A | 20.09.10 | FOR DA | JR |

LANDSCAPE ARCHITECT

ELECTRICAL CONSULTANT

CIVIL CONSULTANT

BCA CONSULTANT

MECHANICAL CONSULTANT

HYDRAULIC CONSULTANT

STRUCTURAL CONSULTANT

ARCHITECT

**DesignInc**

**DesignInc Sydney** PTY LIMITED ACN 003008820
77 PACIFIC HIGHWAY NORTH SYDNEY
NEW SOUTH WALES 2060 AUSTRALIA
TELEPHONE +612 8905 7100 FACSIMILE + 612 8905 7199
www.designinc.com.au EMAIL sydney@designinc.com.au
NOMINATED ARCHITECTS:
Ghislain Coulon 4669 . Anthony Quan 5421 . Sandeep Amin 7337

**Architecture Urban Design Interiors**

DESIGN & CONSTRUCT CONTRACTOR

PROJECT

**BLACKTOWN OLYMPIC PARK SIGNAGE DEVELOPMENT**
EASTERN RD, ROOTY HILL

TITLE

**LOCATION PLAN FOR SIGNAGE 4**

| DRAWING STATUS | REVIEWED BY | SIGNATURE | DATE |
|---|---|---|---|
| PRELIMINARY | | | |
| FOR INFORMATION ONLY | | | |
| FOR D.A. APPROVAL | | | |
| FOR CONSTRUCTION CERTIFICATE | | | |
| FOR TENDER | | | |
| FOR CONSTRUCTION | | | |
| AS BUILT DOCUMENT | | | |

N

| | |
|---|---|
| DRAWN BY | JR |
| SCALES | AS SHOWN |
| PLOT DATE: | 17.09.10 |
| JOB Nº. | 281200 |
| DRAW'G/REV'N Nº. | SDA04/RevA |

QUALITY CERTIFIED ISO 9001

Completion of the Drawing Status is evidence the design has been verified as conforming to the requirements of the Project M.S. Plan. Initialling the 'Drawn By' box confirms that this drawing has been prepared in conformity with DesignInc Sydney M.S. procedures.

**DEVELOPMENT APPLICATION**

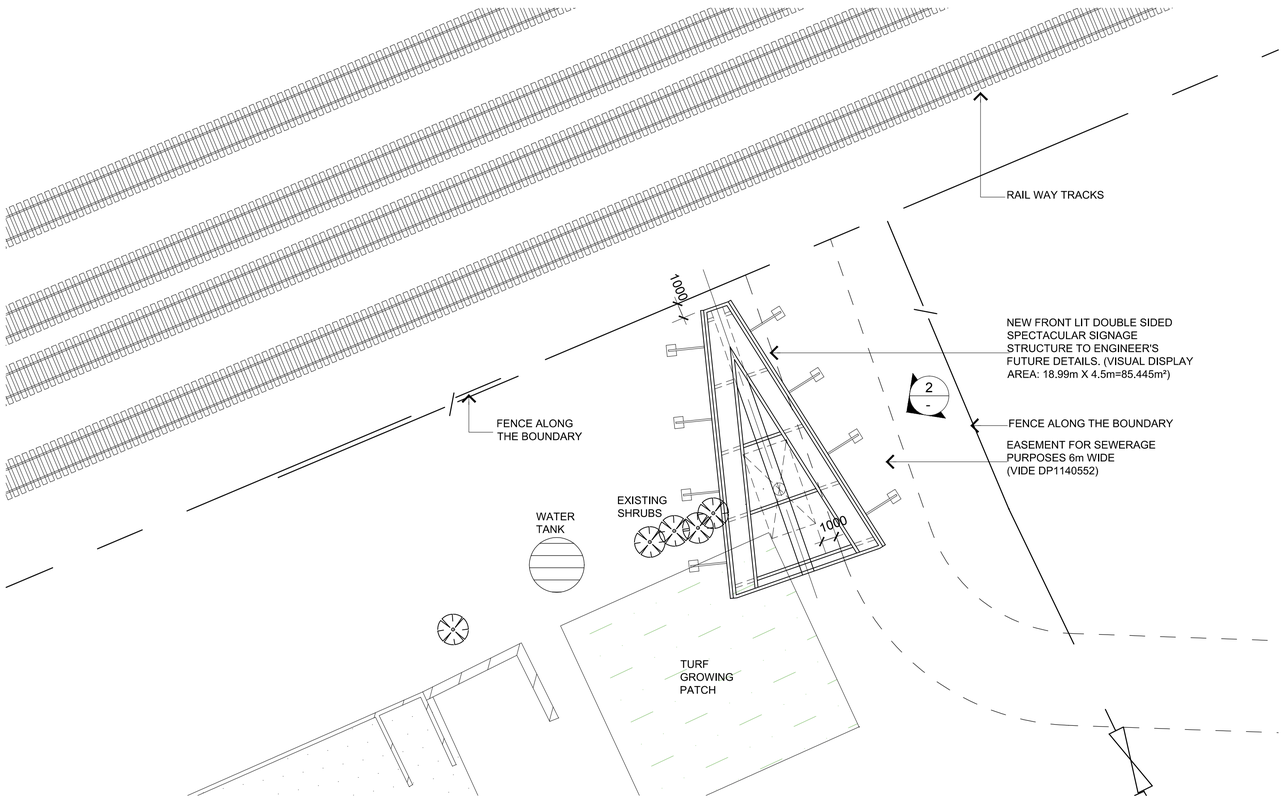


1 PLAN OF SIGNAGE

1 : 200 @ A1

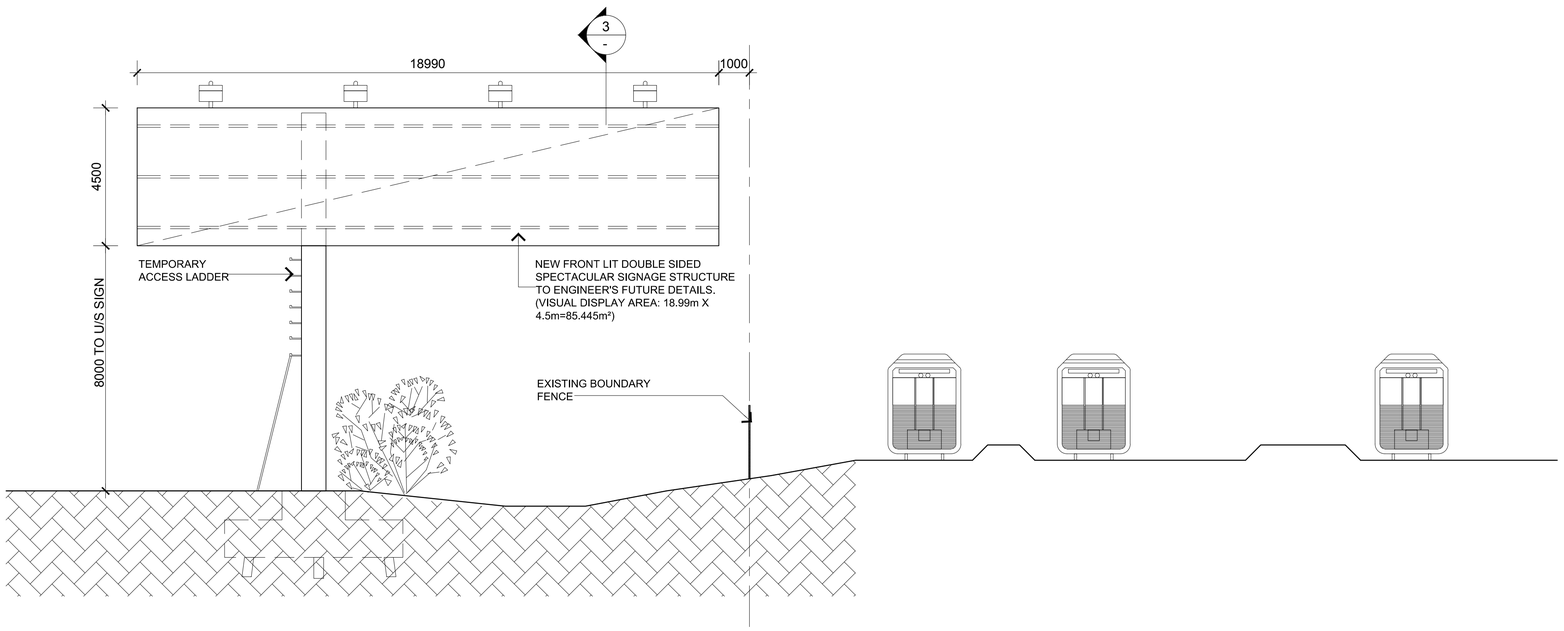


2 ELEVATION

1 : 100 @ A1

0 1 2 3 4 5m

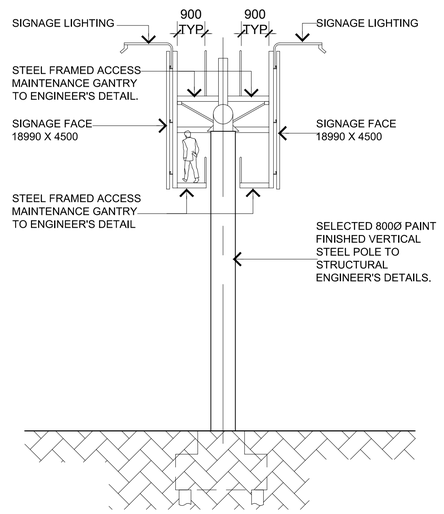


3 SECTION

1 : 100 @ A1

© Copyright DesignInc Sydney Pty Limited

This drawing is protected by copyright. All rights are reserved. Unless permitted under the Copyright Act 1968, no part of this drawing may in any form or by any means be reproduced, published, broadcast or transmitted without the prior written permission of the copyright owner.

**Please note**

If the Status of this drawing is not signed off For Construction it may be subject to change, alteration or amendment at the discretion of DesignInc Sydney Pty Limited. If so, DesignInc Sydney Pty Limited is not liable for any loss, damage, harm or injury whether special, consequential, direct or indirect, suffered by you or any other person as a result of your use of this drawing for construction purposes.

Figured dimensions take preference to scale readings. Verify all dimensions on site. Report any discrepancies to the Architect for decision before proceeding with the work.

| Nº. | DATE | REVISIONS | BY |
|---|---|---|---|
| A | 20.09.10 | FOR DA | JR |

LANDSCAPE ARCHITECT

ELECTRICAL CONSULTANT

CIVIL CONSULTANT

BCA CONSULTANT

MECHANICAL CONSULTANT

HYDRAULIC CONSULTANT

STRUCTURAL CONSULTANT

ARCHITECT

DesignInc

DesignInc Sydney PTY LIMITED ACN 003008820
77 PACIFIC HIGHWAY NORTH SYDNEY
NEW SOUTH WALES 2060 AUSTRALIA
TELEPHONE +612 8905 7100 FACSIMILE +612 8905 7199
www.designinc.com.au EMAIL sydney@designinc.com.au
NOMINATED ARCHITECTS:
Ghislaim Coulon 4669 . Anthony Quan 5421 . Sandeep Armin 7337

Architecture Urban Design Interiors

DESIGN & CONSTRUCT CONTRACTOR

PROJECT

**BLACKTOWN OLYMPIC PARK SIGNAGE DEVELOPMENT**

EASTERN RD, ROOTY HILL

TITLE

**SIGNAGE 5 RAILWAY LOCATION**

| DRAWING STATUS | REVIEWED BY | SIGNATURE | DATE |
|---|---|---|---|
| PRELIMINARY | | | |
| FOR INFORMATION ONLY | | | |
| FOR D.A. APPROVAL | | | |
| FOR CONSTRUCTION CERTIFICATE | | | |
| FOR TENDER | | | |
| FOR CONSTRUCTION | | | |
| AS BUILT DOCUMENT | | | |

N

DRAWN BY: JR

SCALES: AS SHOWN

PLOT DATE: 02.09.10

JOB Nº. 281200

DRAW'G/REV'N Nº. SDA05/RevA

QUALITY CERTIFIED ISO 9001

Completion of the Drawing Status is evidence the design has been verified as conforming to the requirements of the Project M.S. Plan. Initialling the 'Drawn By' box confirms that this drawing has been prepared in conformity with DesignInc Sydney M.S. procedures.

**DEVELOPMENT APPLICATION**

# Appendix C
# Photomontages

Sites 1 and Site 2 view south

Site 1 view south

Site 2 view south

Site 2 view west

Site 3 view east

Site 3 view west

Site 4 view east

Site 4 view west

Site 4 view west